625 Liberty Ave, Suite 1700
Pittsburgh PA 15222
www.eqt.com

TEL: (412) 395-3699
FAX: (412) 395-2156

Alex Bosiljevac
Environmental Coordinator

RECEIVED
APR 28 2016
WV DEP / DIV OF AIR QUALITY

April 25, 2016

CERTIFIED MAIL # 7015 1660 0000 9399 6031

Mr. William F. Durham, Director
West Virginia Department of Environmental Protection
Division of Air Quality
601 57th Street, SE
Charleston, West Virginia, 25304

RE: G70B Permit Application
EQT Production Company
OXF-156 Natural Gas Production Site
Facility ID No. 017-00070

Dear Mr. Durham,

Enclosed are two electronic copies and one original hard copy of a proposed application for a G70-B General Air Permit for the OXF-156 Natural Gas Production Well Site. The site currently operates under an R13 Air Permit (R13-3134). Please note that this application satisfies a requirement in Consent Order CO-R13-E-2016-04, in which EQT Production Company is required to submit an application with the equipment specified in the consent order. A legal advertisement will be published in the next few days and proof of publication will be forwarded as soon as it is received. Please contact me for payment of the application fee by credit card.

If you have any questions concerning this permit application, please contact me at (412) 395-3699 or by email at abosiljevac@eqt.com.

Sincerely,

RAB

Alex Bosiljevac
EQT Corporation

Enclosures

017-00070
Reg 670-3207
Company EQT
Facility OXF-156 Initials JW

NON-CONFIDENTIAL

RECEIVED
APR 28 2016
WV DEP / DIV OF AIR QUALITY

PROJECT REPORT

EQT Production
OXF-156 Pad

G70-B Permit Application

Where energy meets innovation.

ID # 017-00070
Reg G70-B207
Company EQT
Facility OXF-156 Initials JL

TRINITY CONSULTANTS
4500 Brooktree Drive
Suite 103
Wexford, PA 15090
(724) 935-2611

NON-CONFIDENTIAL

March 2016

Trinity Consultants

Environmental solutions delivered uncommonly well

TABLE OF CONTENTS

1. INTRODUCTION 4

1.1. FACILITY AND PROJECT DESCRIPTION 4

1.2. SOURCE STATUS 4

1.3. G70-B APPLICATION ORGANIZATION 5

2. SAMPLE EMISSION SOURCE CALCULATIONS 6

3. REGULATORY DISCUSSION 8

3.1. Prevention of Significant Deterioration Source Classification 8

3.2. Title V Operating Permit Program 8

3.3. New Source Performance Standards 8

3.3.1. NSPS Subparts D, Da, Db, and Dc – Steam Generating Units 9

3.3.2. NSPS Subparts K, Ka, and Kb – Storage Vessels for Petroleum Liquids/Volatile Organic Liquids 9

3.3.3. NSPS Subparts JJJJ – Stationary Spark Ignition Internal Combustion Engines 9

3.3.4. NSPS Subpart OOOO - Crude Oil and Natural Gas Production, Transmission, and Distribution 9

3.3.5. NSPS Subpart OOOOa—Crude Oil and Natural Gas Facilities 10

3.3.6. Non-Applicability of All Other NSPS 11

3.4. National Emission Standards for Hazardous Air Pollutants 11

3.4.1. 40 CFR 63 Subpart HH – Oil and Natural Gas Production Facilities 11

3.4.2. 40 CFR 63 Subpart ZZZZ – Stationary Reciprocating Internal Engines 11

3.4.3. 40 CFR 63 Subpart JJJJJJ – Industrial, Commercial, and Institutional Boilers 11

3.5. West Virginia SIP Regulations 11

3.5.1. 45 CSR 2: To Prevent and Control Particulate Air Pollution from Combustion of Fuel in Indirect Heat Exchangers 12

3.5.2. 45 CSR 4: To Prevent and Control the Discharge of Air Pollutants into the Air Which Causes or Contributes to an Objectionable Odor 12

3.5.3. 45 CSR 6: Control of Air Pollution from the Combustion of Refuse 12

3.5.4. 45 CSR 16: Standards of Performance for New Stationary Sources 12

3.5.5. 45 CSR 17: To Prevent and Control Particulate Matter Air Pollution from Materials Handling, Preparation, Storage and Other Sources of Fugitive Particulate Matter 12

3.5.6. 45 CSR 21-28: Petroleum Liquid Storage in Fixed Roof Tanks 12

3.5.7. 45 CSR 34: Emissions Standards for Hazardous Air Pollutants 13

3.5.8. Non-Applicability of Other SIP Rules 13

4. G70-B APPLICATION FORMS 14

ATTACHMENT A: SINGLE SOURCE DETERMINATION

ATTACHMENT B: SITING CRITERIA WAIVER (NOT APPLICABLE)

ATTACHMENT C: BUSINESS CERTIFICATE

ATTACHMENT D: PROCESS FLOW DIAGRAM

ATTACHMENT E: PROCESS DESCRIPTION
ATTACHMENT F: PLOT PLAN
ATTACHMENT G: AREA MAP
ATTACHMENT H: APPLICABILITY FORM
ATTACHMENT I: EMISSION UNITS TABLE
ATTACHMENT J: FUGITIVE EMISSIONS SUMMARY SHEET
ATTACHMENT K: GAS WELL DATA SHEET
ATTACHMENT L: STORAGE VESSEL DATA SHEET
ATTACHMENT M: HEATERS DATA SHEET
ATTACHMENT N: ENGINES DATA SHEET
ATTACHMENT O: TRUCK LOADING DATA SHEET
ATTACHMENT P: GLYCOL DEHYDRATOR DATA SHEET (NOT APPLICABLE)
ATTACHMENT Q: PNEUMATIC CONTROLLER DATA SHEET (NOT APPLICABLE)
ATTACHMENT R: AIR POLLUTION CONTROL DEVICE DATA SHEET
ATTACHMENT S: EMISSION CALCULATIONS
ATTACHMENT T: EMISSION SUMMARY SHEET
ATTACHMENT U: CLASS I LEGAL ADVERTISEMENT
ATTACHMENT V: GENERAL PERMIT REGISTRATION APPLICATION FEE

1. INTRODUCTION

EQT Production Company (EQT) is submitting this Class II General Permit (G70-B) application to the West Virginia Department of Environmental Protection (WVDEP) for the construction and operation of new equipment at an natural gas production well pad, OXF-156, located in Doddridge County, West Virginia. The OXF-156 pad is currently operating under R13 permit number R13-3134.

1.1. FACILITY AND PROJECT DESCRIPTION

The OXF-156 pad is a natural gas production facility that consists of five (5) drilled natural gas wells (4 in operation). Natural gas and liquids (including water and condensate) are extracted from deposits underneath the surface. Natural gas is transported from the well to a gas line for additional processing and compression, as necessary. The liquids produced are stored in storage vessels.

The OXF-156 pad currently consists of the following equipment:

- Six (6) 400 barrel (bbl) storage tanks for condensate/water (produced fluids) controlled by one (1) existing combustor rated at 11.66 MMBtu/hr;
- Six (6) line heaters rated at 1.54 MMBtu/hr (heat input);
- Two (2) thermoelectric generators (TEGs), each rated at 0.013 MMBtu/hr (heat input);
- Produced fluid truck loading; and
- Associated piping and components.

This application seeks to permit the following equipment at the OXF-156 pad:

- One (1) 140 bbl storage tank for sand and produced fluids from the sand separator (vapors from this tank may be controlled by combustors but are not represented as controlled in this application);
- One low pressure separator and associated 1.15 MMbtu/hr line heater;
- One vapor recovery unit (VRU) powered by a natural gas fired 110 horsepower (hp) engine; and
- One new combustor rated at 11.66 MMBtu/hr.

A process flow diagram is included as Attachment D.

1.2. SOURCE STATUS

WVDEP must make stationary source determinations on a case-by-case basis using the guidance under the Clean Air Act (CAA) and EPA's and WVDEP's implementing regulations. The definition of stationary source in 40 CFR 51.166(b) includes the following:

> *"(6) Building, structure, facility, or installation means all of the pollutant emitting activities which belong to the same industrial grouping, are located on or more contiguous or adjacent properties, and are under control of the same person (or persons under common control)."*

Other additional pollutant emitting facilities should be aggregated with the OXF-156 Pad for air permitting purposes if, and only if, all three elements of the "stationary source" definition above are fulfilled.

WVDEP determined that the OXF-156 pad is a separate stationary source when the current permit was issued. There are no Marcellus facilities within a quarter-mile radius of the OXF-156 Pad. The nearest wellpad, OXF-150, is located approximately 2,185 feet southwest of OXF-156. Therefore, the OXF-156 pad should continue to be considered a separate stationary source with respect to permitting programs, including Title V and Prevention of Significant Deterioration (PSD). As discussed in this application, the facility is a minor source of air emissions with respect to New Source Review (NSR) and Title V permitting.

1.3. G70-B APPLICATION ORGANIZATION

This West Virginia Code of State Regulations, Title 45 (CSR) Series 13 (45 CSR 13) G70-B permit application is organized as follows:

- Section 2: Sample Emission Source Calculations;
- Section 3: Regulatory Discussion;
- Section 4: G70-B Application Form;
- Attachment A: Single Source Determination;
- Attachment B: Siting Criteria Waiver **(Not Applicable)**;
- Attachment C: Business Certificate;
- Attachment D: Process Flow Diagram;
- Attachment E: Process Description;
- Attachment F: Plot Plan;
- Attachment G: Area Map;
- Attachment H: Applicability Form;
- Attachment I: Emission Units Table;
- Attachment J: Fugitive Emissions Summary Sheet;
- Attachment K: Gas Well Data Sheet;
- Attachment L: Storage Vessel Data Sheet;
- Attachment M: Heaters Data Sheet;
- Attachment N: Engines Data Sheet;
- Attachment O: Truck Loading Data Sheet;
- Attachment P: Glycol Dehydrator Data Sheet **(Not Applicable)**;
- Attachment Q: Pneumatic Controller Data Sheet **(Not Applicable)**;
- Attachment R: Air Pollution Control Device Data Sheet;
- Attachment S: Emission Calculations;
- Attachment T: Emission Summary Sheet;
- Attachment U: Class I Legal Advertisement; and
- Attachment V: General Permit Registration Application Fee.

2. SAMPLE EMISSION SOURCE CALCULATIONS

The characteristics of air emissions from the natural gas production operations, along with the methodology for calculating emissions, are briefly described in this section of the application. Detailed emission calculations are presented in Attachment S of this application.

Emissions from this project will result from natural gas combustion in the line heaters, combustors and TEGs, as well as storage of organic liquids in storage tanks and loading of organic liquids into tank trucks. In addition, fugitive emissions will result from component leaks from the operation of the station. The methods by which emissions from each of these source types, as well as the existing source types, are calculated are summarized below.

> **Line Heaters, Enclosed Combustors and TEGs:** Potential emissions of criteria pollutants and hazardous air pollutants (HAPs) are calculated using U.S. EPA's AP-42 factors for natural gas external combustion.[1] These calculations assume a site-specific heat content of natural gas. Greenhouse gas emissions are calculated according to 40 CFR 98 Subpart C.[2]

> **VRU Engine:** Potential emissions of oxides of nitrogen (NO_X), carbon monoxide (CO), and volatile organic compounds (VOC) are calculated using vendor emission factors. Remaining criteria pollutants and HAPs are calculated using U.S. EPA's AP-42 factors for natural gas fired engines.[3] These calculations assume a site-specific heat content of natural gas. Greenhouse gas emissions are calculated according to 40 CFR 98 Subpart C.[4]

> **Fugitive Equipment Leaks:** Emissions of VOC and HAPs from leaking equipment components have been estimated using facility estimated component counts and types along with emission factors from the *Protocol for Equipment Leak Emission Estimates, EPA 453/R-95-017, November 1995.* Emission factors used are based on average measured TOC from component types indicated. Greenhouse gas emissions from component leaks are calculated according to the procedures in 40 CFR 98 Subpart W.[5]

> **Storage Tanks:** Working, breathing and flashing emissions of VOC and HAPs from the storage tanks at the facility are calculated using Bryan Research & Engineering ProMax® Software. Controlled calculations assume an overall control efficiency (capture and destruction) of 98%. The throughput for the produced fluids tanks are based on the maximum annualized monthly condensate and produced water at the OXF-156 well pad (i.e., the maximum monthly throughput for the pad times 12) with a 20% safety factor added. The composition for the analysis was from a sample taken at OXF-156. Emissions of VOC and HAPs from the sand separator tank are calculated using E&P TANK v2.0. The produced fluids throughput is calculated as follows:

$$Throughput\left(\frac{bbl}{day}\right) = \left(Condensate\ Throughput\left(\frac{bbl}{month}\right) + \left(Produced\ Water\ Throughput\left(\frac{bbl}{month}\right)\right) * \frac{12\left(\frac{months}{year}\right)}{365\left(\frac{days}{year}\right)}\right)$$

> **Tank Truck Loading:** Uncontrolled emissions of VOC and HAPs from the loading of organic liquids from storage tanks to tank truck are calculated using Bryan Research Engineering ProMax® Software. Truck

---

[1] U.S. EPA, AP 42, Fifth Edition, Volume I, Chapter 1.4, Natural Gas Combustion, Supplement D, July 1998.
[2] 40 CFR 98 Subpart C, *General Stationary Fuel combustion Sources*, Tables C-1 and C-2.
[3] U.S. EPA, AP 42, Fifth Edition, Volume I, Chapter 3.2, Natural Gas-fired Reciprocating Engines, Supplement D, August 2000.
[4] 40 CFR 98 Subpart C, *General Stationary Fuel combustion Sources*, Tables C-1 and C-2.
[5] 40 CFR 98 Subpart W, *Petroleum and Natural Gas Systems*, Section 98.233(r), *Population Count and Emission Factors.*

loading is controlled by the enclosed combustors. U.S. EPA's AP-42 Chapter 5 Section 2 factors were used for capture efficiency.[6]

> **Haul Roads:** Fugitive dust emitted from facility roadways has been estimated using projected vehicle miles traveled along with U.S. EPA's AP-42 factors for unpaved haul roads.[7]

[6] U.S. EPA, AP 42, Fifth Edition, Volume I, Chapter 5.2, Transportation And Marketing Of Petroleum Liquids, June 2008.
[7] U.S. EPA, AP 42, Fifth Edition, Volume I, Section 13.2.2, Unpaved Roads, November 2006.

3. REGULATORY DISCUSSION

This section documents the applicability determinations made for Federal and State air quality regulations. In this section, applicability or non-applicability of the following regulatory programs is addressed:

- Prevention of Significant Deterioration permitting;
- Title V of the 1990 Clean Air Act Amendments;
- New Source Performance Standards (NSPS);
- National Emission Standards for Hazardous Air Pollutants (NESHAP); and
- West Virginia State Implementation Plan (SIP) regulations.

This review is presented to supplement and/or add clarification to the information provided in the WVDEP G70-B permit application forms.

In addition to providing a summary of applicable requirements, this section of the application also provides non-applicability determinations for certain regulations, allowing the WVDEP to confirm that identified regulations are not applicable to the wellpad. Note that explanations of non-applicability are limited to those regulations for which there may be some question of applicability specific to the operations at the wellpad. Regulations that are categorically non-applicable are not discussed (e.g., NSPS Subpart J, Standards of Performance for Petroleum Refineries).

3.1. PREVENTION OF SIGNIFICANT DETERIORATION SOURCE CLASSIFICATION

Federal construction permitting programs regulate new and modified sources of attainment pollutants under Prevention of Significant Deterioration. PSD regulations apply when a major source makes a change, such as installing new equipment or modifying existing equipment, and a significant increase in emissions results from the change. The wellpad is not a major source with respect to the PSD program since its potential emissions are below all the PSD thresholds. As such, PSD permitting is not triggered by this construction activity. EQT will monitor future construction activities at the site closely and will compare any future increase in emissions with the PSD thresholds to ensure these activities will not trigger this program.

3.2. TITLE V OPERATING PERMIT PROGRAM

Title 40 of the Code of Federal Regulations Part 70 (40 CFR 70) establishes the federal Title V operating permit program. West Virginia has incorporated the provisions of this federal program in its Title V operating permit program in West Virginia CSR 45-30. The major source thresholds with respect to the West Virginia Title V operating permit program regulations are 10 tons per year (tpy) of a single HAP, 25 tpy of any combination of HAP and 100 tpy of all other regulated pollutants.[8] The potential emissions of all regulated pollutants are below the corresponding threshold(s) at this facility after the proposed project. Therefore, the wellpad is not a major source for Title V purposes.

3.3. NEW SOURCE PERFORMANCE STANDARDS

New Source Performance Standards, located in 40 CFR 60, require new, modified, or reconstructed sources to control emissions to the level achievable by the best demonstrated technology as specified in the applicable provisions.

[8] On June 23, 2014, the U.S Supreme Court decision in the case of *Utility Air Regulatory Group v. EPA* effectively changed the permitting procedures for GHGs under the PSD and Title V programs.

Moreover, any source subject to an NSPS is also subject to the general provisions of NSPS Subpart A, except where expressly noted. The following is a summary of applicability and non-applicability determinations for NSPS regulations of relevance to the wellpad. The following NSPS could potentially apply to the wellpad:

- 40 CFR Part 60 Subparts D/Da/Db/Dc – Steam Generating Units
- 40 CFR Part 60 Subpart K/Ka/Kb – Storage Vessels for Petroleum Liquids/Volatile Organic Liquids
- 40 CFR Part 60 Subpart JJJJ – Stationary Spark Ignition Internal Combustion Engines
- 40 CFR Part 60 Subpart OOOO – Crude Oil and Natural Gas Production, Transmission, and Distribution
- 40 CFR Part 60 Subpart OOOOa – Crude Oil and Natural Gas Facilities

3.3.1. NSPS Subparts D, Da, Db, and Dc - Steam Generating Units

These subparts apply to steam generating units of various sizes, all greater than 10 MMBtu/hr. The proposed project does not include any steam generating units with a heat input greater than 10 MMbtu/hr, therefore the requirements of these subparts do not apply.

3.3.2. NSPS Subparts K, Ka, and Kb - Storage Vessels for Petroleum Liquids/Volatile Organic Liquids

These subparts apply to storage tanks of certain sizes constructed, reconstructed, or modified during various time periods. Subpart K applies to storage tanks constructed, reconstructed, or modified prior to 1978, and Subpart Ka applies to those constructed, reconstructed, or modified prior to 1984. Both Subparts K and Ka apply to storage tanks with a capacity greater than 40,000 gallons. Subpart Kb applies to volatile organic liquid (VOL) storage tanks constructed, reconstructed, or modified after July 23, 1984 with a capacity equal to or greater than 75 m^3 (~19,813 gallons). All of the tanks at the wellpad have a capacity of 19,813 gallons or less. As such, Subparts K, Ka, and Kb do not apply to the storage tanks at the wellpad.

3.3.3. NSPS Subpart JJJJ - Stationary Spark Ignition Internal Combustion Engines

New Source Performance Standards 40 CFR Part 60 Subpart JJJJ (NSPS JJJJ) affects owners and operators of stationary spark ignition internal combustion engines (SI ICE) that commence construction, reconstruction or modification after June 12, 2006. Applicability dates are based on the date the engine was ordered by the operator. The proposed engine (VRU engine) at the well pad is a 4-stroke rich burn, spark ignition engine manufactured after July 1, 2008, and is subject to this subpart. EQT will operate the engine according to the manufacturer's recommended practices and demonstrate compliance with the requirements specified in 40 CFR §60.4244 (testing methods) and 40 CFR§60.4243(b)(2) (maintenance plan/records and performance testing frequency) for noncertified affected SI ICE at the facility or by purchasing a certified engine. At this time, EQT intends to purchase a certified engine

3.3.4. NSPS Subpart OOOO - Crude Oil and Natural Gas Production, Transmission, and Distribution

Subpart OOOO, Standards of Performance for Crude Oil and Natural Gas Production, Transmission, and Distribution, applies to affected facilities that commenced construction, reconstruction, or modification after August 23, 2011 (see clarification below regarding dates). This NSPS was published in the Federal Register on August 16, 2012, and subsequently amended. Although there are sources proposed to be installed that could potentially be subject to this regulation, due to the anticipated installation dates, they will not be subject to the rule. This is due to the most recent proposed developments related to the rule, which are the inclusion of an end date for applicability to Subpart OOOO

(September 18, 2015) and the promulgation of 40 CFR 60 Subpart OOOOa.[9] The potential applicability of Subpart OOOOa is discussed in the following section.

3.3.5. NSPS Subpart OOOOa—Crude Oil and Natural Gas Facilities

Subpart OOOOa, Standards of Standards of Performance for Crude Oil and Natural Gas Facilities, will apply to affected facilities that commenced construction, reconstruction, or modification after September 18, 2015. This regulation has yet to be finalized. The currently proposed version of the rule includes provisions for the following facilities:

- Hydraulically fractured wells;
- Centrifugal compressors located between the wellhead and the point of custody transfer to the natural gas distribution segment;
- Reciprocating compressors located between the wellhead and the point of custody transfer to the natural gas distribution segment;
- Continuous bleed natural gas-driven pneumatic controllers with a bleed rate of > 6 scfh located in the production, gathering, processing, or transmission and storage segments (excluding natural gas processing plants);
- Continuous bleed natural gas-driven pneumatic controllers located at natural gas processing plants;
- Pneumatic pumps located in the production, gathering, processing, or transmission and storage segments;
- Storage vessels located in the production, gathering, processing, or transmission and storage segments;
- The collection of fugitive emissions components at a well site;
- The collection of fugitive emissions components at a compressor station; and
- Sweetening units located onshore that process natural gas produced from either onshore or offshore wells.

Based on the current version of the proposed rule, the following paragraphs describe the potential applicability of the facilities to be located at the proposed facility.

40 CFR 60.5385 requires owners and operators of affected reciprocating compressors to change the rod packing prior to operating 26,000 hours or prior to 36 months since start up or the last packing replacement. However, according to §60.5365a, compressors located at well sites are not affected facilities under Subpart OOOOa.

There will be six (6) produced fluid storage vessels and one (1) sand separator storage vessel at the wellpad. The storage vessels at the facility each have potential VOC emissions less than 6 tpy based on the permit application materials and enforceable limits to be included in the G70-B permit. As such, per 60.5365a(e), the tanks will not be storage vessel affected facilities under the rule.

Note that the proposed changes to the well pad do not met the definition of modification under 60.5365a(i)(3). Therefore, EQT will not be subject to the leak detection and repair program under OOOOa.

The pneumatic controllers will potentially subject to NSPS OOOOa. Per 60.5365a(d)(1), a pneumatic controller affected facility is a single continuous bleed natural gas driven pneumatic controller operating at a natural gas bleed rate greater than 6 scfh. No pneumatic controllers installed will meet the definition of a pneumatic controller affected facility. Therefore, these units are not subject to the requirements of Subpart OOOOa.

---

[9] September 18, 2015 publication in Federal Register: https://www.federalregister.gov/articles/2015/09/18/2015-21023/oil-and-natural-gas-sector-emission-standards-for-new-and-modified-sources

3.3.6. Non-Applicability of All Other NSPS

NSPS are developed for particular industrial source categories. Other than NSPS developed for natural gas processing plants (Subparts OOOO) and associated equipment (Subparts D-Dc and K-Kb), the applicability of a particular NSPS to the wellpad can be readily ascertained based on the industrial source category covered. All other NSPS are categorically not applicable to the proposed project.

3.4. NATIONAL EMISSION STANDARDS FOR HAZARDOUS AIR POLLUTANTS

Part 63 NESHAP allowable emission limits are established on the basis of a maximum achievable control technology (MACT) determination for a particular major source. A HAP major source is defined as having potential emissions in excess of 25 tpy for total HAP and/or potential emissions in excess of 10 tpy for any individual HAP. The wellpad is an Area (minor) source of HAP since its potential emissions of HAP are less than the 10/25 major source thresholds. NESHAP apply to sources in specifically regulated industrial source categories (Clean Air Act Section 112(d)) or on a case-by-case basis (Section 112(g)) for facilities not regulated as a specific industrial source type. Besides 40 CFR 63 Subpart A (NESHAP Subpart A), which is similar to 40 CFR 60 Subpart A (NSPS Subpart A), the following NESHAP could potentially apply to the wellpad:

- 40 CFR Part 63 Subpart HH – Oil and Natural Gas Production Facilities
- 40 CFR Part 63 Subpart ZZZZ – Stationary Reciprocating Internal Combustion Engines
- 40 CFR Part 63 Subpart JJJJJJ – Industrial, Commercial, and Institutional Boilers

The applicability of these NESHAP Subparts is discussed in the following sections.

3.4.1. 40 CFR 63 Subpart HH - Oil and Natural Gas Production Facilities

This standard contains requirements for both major and area sources of HAP. At area sources, the only affected source is a triethylene glycol dehydration unit (§63.760(b)(2)). The wellpad does not include a triethylene glycol dehydration unit; therefore the requirements of this subpart do not apply.

3.4.2. 40 CFR 63 Subpart ZZZZ - Stationary Reciprocating Internal Engines

This rule affects reciprocating internal combustion engines (RICE) located at a major and area sources of HAP. 40 CFR §63.6590(c) states that a new or reconstructed stationary RICE located at an area HAP source must meet the requirements of NESHAP Subpart ZZZZ by meeting the requirements of NSPS Subpart JJJJ. No further requirements apply for such engines under NESHAP Subpart ZZZZ. The OXF-156 well pad is a minor (area) source of hazardous air pollutants and the VRU engine is considered a new stationary RICE. Therefore, the requirements contained in §63.6590(c) are applicable. EQT will be in compliance with applicable requirements of 40 CFR 63 Subpart ZZZZ by meeting the applicable requirements of 40 CFR 60 Subpart JJJJ.

3.4.3. 40 CFR 63 Subpart JJJJJJ - Industrial, Commercial, and Institutional Boilers

This MACT standard applies to industrial, commercial, and institutional boilers of various sizes and fuel types at area sources. The proposed line heater will be natural gas-fired and is specifically exempt from this subpart. Therefore, no sources at the wellpad are subject to any requirements under 40 CFR 63 Subpart JJJJJJ.

3.5. WEST VIRGINIA SIP REGULATIONS

The wellpad is potentially subject to regulations contained in the West Virginia Code of State Regulations, Chapter 45 (Code of State Regulations). The Code of State Regulations fall under two main categories, those regulations that are generally applicable (e.g., permitting requirements), and those that have specific applicability (e.g., PM standards for manufacturing equipment).

3.5.1. 45 CSR 2: To Prevent and Control Particulate Air Pollution from Combustion of Fuel in Indirect Heat Exchangers

45 CSR 2 applies to fuel burning units, defined as equipment burning fuel "for the primary purpose of producing heat or power by indirect heat transfer". The TEGs and line heaters are fuel burning units and therefore must comply with this regulation. Per 45 CSR 2-3, opacity of emissions from units shall not exceed 10 percent.

3.5.2. 45 CSR 4: To Prevent and Control the Discharge of Air Pollutants into the Air Which Causes or Contributes to an Objectionable Odor

According to 45 CSR 4-3:

No person shall cause, suffer, allow or permit the discharge of air pollutants which cause or contribute to an objectionable odor at any location occupied by the public.

The wellpad is generally subject to this requirement. However, due to the nature of the process at the wellpad, production of objectionable odor from the wellpad during normal operation is unlikely.

3.5.3. 45 CSR 6: Control of Air Pollution from the Combustion of Refuse

45 CSR 6 applies to activities involving incineration of refuse, defined as "the destruction of combustible refuse by burning in a furnace designed for that purpose. For the purposes of this rule, the destruction of any combustible liquid or gaseous material by burning in a flare or flare stack, thermal oxidizer or thermal catalytic oxidizer stack shall be considered incineration." The enclosed combustors are incinerators and therefore must comply with this regulation. Per 45 CSR 6-4.3, opacity of emissions from this unit shall not exceed 20 percent, except as provided by 4.4. PM emissions from this unit will not exceed the levels calculated in accordance with 6-4.1.

3.5.4. 45 CSR 16: Standards of Performance for New Stationary Sources

45 CSR 16-1 incorporates the federal Clean Air Act (CAA) standards of performance for new stationary sources set forth in 40 CPR Part 60 by reference. As such, by complying with all applicable requirements of 40 CFR Part 60 at the wellpad, EQT will be complying with 45 CSR 16.

3.5.5. 45 CSR 17: To Prevent and Control Particulate Matter Air Pollution from Materials Handling, Preparation, Storage and Other Sources of Fugitive Particulate Matter

According to 45 CSR 17-3.1:

No person shall cause, suffer, allow or permit fugitive particulate matter to be discharged beyond the boundary lines of the property lines of the property on which the discharge originates or at any public or residential location, which causes or contributes to statutory air pollution.

Due to the nature of the activities at the wellpad, it is unlikely that fugitive particulate matter emissions will be emitted under normal operating conditions. However, EQT will take measures to ensure any fugitive particulate matter emissions will not cross the property boundary should any such emissions occur.

3.5.6. 45 CSR 21-28: Petroleum Liquid Storage in Fixed Roof Tanks

45 CSR 21-28 applies to any fixed roof petroleum liquid storage tank with a capacity greater than 40,000 gallons. The capacity of each storage tank proposed for the wellpad is less than 40,000 gallons; therefore, 45 CSR 21-28 will not apply to the petroleum liquid storage tanks at this wellpad.

3.5.7. 45 CSR 34: Emissions Standards for Hazardous Air Pollutants

45 CSR 34-1 incorporates the federal Clean Air Act (CAA) national emissions standards for hazardous air pollutants (NESHAPs) as set forth in 40 CPR Parts 61 and 63 by reference. As such, by complying with all applicable requirements of 40 CFR Parts 61 and 63 at the wellpad, EQT will be complying with 45 CSR 34. Note that there are no applicable requirements under 40 CFR Parts 61 and 63 for the wellpad.

3.5.8. Non-Applicability of Other SIP Rules

A thorough examination of the West Virginia SIP rules with respect to applicability at the wellpad reveals many SIP regulations that do not apply or impose additional requirements on operations. Such SIP rules include those specific to a particular type of industrial operation that is categorically not applicable to the wellpad.

4. G70-B APPLICATION FORMS

The WVDEP permit application forms contained in this application include all applicable G70-B application forms including the required attachments.

dep	**West Virginia** Department of Environmental Protection	Division of Air Quality 601 57th Street SE Charleston, WV 25304 Phone (304) 926-0475 Fax (304) 926-0479 www.dep.wv.gov

G70-B GENERAL PERMIT REGISTRATION APPLICATION

PREVENTION AND CONTROL OF AIR POLLUTION IN REGARD TO THE CONSTRUCTION, MODIFICATION, RELOCATION, ADMINISTRATIVE UPDATE AND OPERATION OF NATURAL GAS PRODUCTION FACILITIES LOCATED AT THE WELL SITE

☒CONSTRUCTION
☐MODIFICATION
☐RELOCATION

☐CLASS I ADMINISTRATIVE UPDATE
☐CLASS II ADMINISTRATIVE UPDATE

SECTION 1. GENERAL INFORMATION

Name of Applicant (as registered with the WV Secretary of State's Office): EQT Production Company

Federal Employer ID No. (FEIN): 25-0724685

Applicant's Mailing Address: 625 Liberty Avenue, Suite 1700

City: Pittsburgh	State: PA	ZIP Code: 15222

Facility Name: OXF-156 Pad

Operating Site Physical Address: Left Fork Run Road, Oxford, WV
If none available, list road, city or town and zip of facility.

City: Oxford	Zip Code: 26421	County: Doddridge

Latitude & Longitude Coordinates (NAD83, Decimal Degrees to 5 digits):
Latitude: 39.22873 N
Longitude: -80.78660 W

SIC Code: 1311 NAICS Code: 211111	DAQ Facility ID No. (For existing facilities) 017-00070

CERTIFICATION OF INFORMATION

This G70-B General Permit Registration Application shall be signed below by a Responsible Official. A Responsible Official is a President, Vice President, Secretary, Treasurer, General Partner, General Manager, a member of the Board of Directors, or Owner, depending on business structure. A business may certify an Authorized Representative who shall have authority to bind the Corporation, Partnership, Limited Liability Company, Association, Joint Venture or Sole Proprietorship. Required records of daily throughput, hours of operation and maintenance, general correspondence, compliance certifications and all required notifications must be signed by a Responsible Official or an Authorized Representative. If a business wishes to certify an Authorized Representative, the official agreement below shall be checked off and the appropriate names and signatures entered. **Any administratively incomplete or improperly signed or unsigned G70-B Registration Application will be returned to the applicant. Furthermore, if the G70-B forms are not utilized, the application will be returned to the applicant. No substitution of forms is allowed.**

I hereby certify that Kenneth Kirk is an Authorized Representative and in that capacity shall represent the interest of the business (e.g., Corporation, Partnership, Limited Liability Company, Association Joint Venture or Sole Proprietorship) and may obligate and legally bind the business. If the business changes its Authorized Representative, a Responsible Official shall notify the Director of the Division of Air Quality immediately.

I hereby certify that all information contained in this G70-B General Permit Registration Application and any supporting documents appended hereto is, to the best of my knowledge, true, accurate and complete, and that all reasonable efforts have been made to provide the most comprehensive information possible.

Responsible Official Signature: _____
Name and Title: Kenneth Kirk, Executive Vice President | Phone: | Fax:
Email: KKirk@eqt.com | Date: 4-25-2016

If applicable:
Authorized Representative Signature: _____
Name and Title: | Phone: | Fax:
Email: | Date:

If applicable:
Environmental Contact
Name and Title: Alex Bosiljevac, Environmental Coordinator | Phone: 412-395-3699 | Fax: 412-395-7027
Email: ABosiljevac@eqt.com | Date:

OPERATING SITE INFORMATION
Briefly describe the proposed new operation and/or any change(s) to the facility: General permit application for an existing natural gas production well pad.
Directions to the facility: From West Union, take US-50 west for 3.4 miles, turn left onto Arnolds Creek Rd/Central Station Rd/Right Fork Run Rd and for 0.7 miles. Continue onto County Route 11/4 Left Fork Run Rd. for 3.5 miles. The access road will be on the left.

ATTACHMENTS AND SUPPORTING DOCUMENTS	
I have enclosed the following required documents:	
Check payable to WVDEP – Division of Air Quality with the appropriate application fee (per 45CSR13 and 45CSR22). ☐ Check attached to front of application. ☐ I wish to pay by electronic transfer. Contact for payment (incl. name and email address): ☒ I wish to pay by credit card. Contact for payment (incl. name and email address): R. Alex Bosiljevac, abosiljevac@eqt.com ☒$500 (Construction, Modification, and Relocation) ☐$300 (Class II Administrative Update) ☒$1,000 NSPS fee for 40 CFR60, Subpart IIII, JJJJ and/or OOOO [1] ☐$2,500 NESHAP fee for 40 CFR63, Subpart ZZZZ and/or HH [2] [1] Only one NSPS fee will apply. [2] Only one NESHAP fee will apply. The Subpart ZZZZ NESHAP fee will be waived for new engines that satisfy requirements by complying with NSPS, Subparts IIII and/or JJJJ. *NSPS and NESHAP fees apply to new construction or if the source is being modified.*	
☒ Responsible Official or Authorized Representative Signature (if applicable)	
☒ Single Source Determination Form **(must be completed in its entirety)** – Attachment A	
☐ Siting Criteria Waiver (if applicable) – Attachment B	☒ Current Business Certificate – Attachment C
☒ Process Flow Diagram – Attachment D	☒ Process Description – Attachment E
☒ Plot Plan – Attachment F	☒ Area Map – Attachment G
☒ G70-B Section Applicability Form – Attachment H	☒ Emission Units/ERD Table – Attachment I
☒ Fugitive Emissions Summary Sheet – Attachment J	
☒ Gas Well Affected Facility Data Sheet (if applicable) – Attachment K	
☒ Storage Vessel(s) Data Sheet (include gas sample data, USEPA Tanks, simulation software (e.g. ProMax, E&P Tanks, HYSYS, etc.), etc. where applicable) – Attachment L	
☒ Natural Gas Fired Fuel Burning Unit(s) Data Sheet (GPUs, Heater Treaters, In-Line Heaters if applicable) – Attachment M	
☒ Internal Combustion Engine Data Sheet(s) (include manufacturer performance data sheet(s) if applicable) – Attachment N	
☒ Tanker Truck Loading Data Sheet (if applicable) – Attachment O	
☐ Glycol Dehydration Unit Data Sheet(s) (include wet gas analysis, GRI- GLYCalc™ input and output reports and information on reboiler if applicable) – Attachment P	
☐ Pneumatic Controllers Data Sheet – Attachment Q	
☒ Air Pollution Control Device/Emission Reduction Device(s) Sheet(s) (include manufacturer performance data sheet(s) if applicable) – Attachment R	
☒ Emission Calculations (please be specific and include all calculation methodologies used) – Attachment S	
☒ Facility-wide Emission Summary Sheet(s) – Attachment T	
☒ Class I Legal Advertisement – Attachment U	
☒ One (1) paper copy and two (2) copies of CD or DVD with pdf copy of application and attachments	

All attachments must be identified by name, divided into sections, and submitted in order.

ATTACHMENT A

Single Source Determination

ATTACHMENT A - SINGLE SOURCE DETERMINATION FORM

Classifying multiple facilities as one "stationary source" under 45CSR13, 45CSR14, and 45CSR19 is based on the definition of Building, structure, facility, or installation as given in §45-14-2.13 and §45-19-2.12. The definition states:

"Building, Structure, Facility, or Installation" means all of the pollutant-emitting activities which belong to the same industrial grouping, are located on one or more contiguous or adjacent properties, and are under the control of the same person (or persons under common control). Pollutant-emitting activities are a part of the same industrial grouping if they belong to the same "Major Group" (i.e., which have the same two (2)-digit code) as described in the Standard Industrial Classification Manual, 1987 (United States Government Printing Office stock number GPO 1987 0-185-718:QL 3).

Is there a facility owned by or associated with the natural gas industry located within one (1) mile of the proposed facility? Yes ☒ No ☐

If Yes, please complete the questionnaire on the following page (Attachment A).

Please provide a source aggregation analysis for the proposed facility below:

Please see discussion in the Application Report.

ATTACHMENT A - SINGLE SOURCE DETERMINATION FORM

Answer each question with a detailed explanation to determine contiguous or adjacent properties which are under a common control and any support facilities. This section must be completed in its entirety.

Provide a map of contiguous or adjacent facilities (production facilities, compressor stations, dehydration facilities, etc.) which are under common control and those facilities that are not under common control but are support facilities. Please indicate the SIC code, permit number (if applicable), and the distance between facilities in question on the map.

Are the facilities owned by the same parent company or a subsidiary of the parent company? Provide the owners identity and the percentage of ownership of each facility. OXF-149 and OXF-150 wellpads are owned by EQT Production Company.	Yes ☒	No ☐
Does an entity such as a corporation have decision making authority over the operation of a second entity through a contractual agreement or voting interest? Please explain.	Yes ☐ N/A	No ☐
Is there a contract for service relationship between the two (2) companies or, a support/dependency relationship that exists between the two (2) companies? Please explain.	Yes ☐ N/A	No ☐
Do the facilities share common workforces, plant managers, security forces, corporate executive officers or board executives?	Yes ☒	No ☐
Will managers or other workers frequently shuttle back and forth to be involved actively at both facilities?	Yes ☒	No ☐
Do the facilities share common payroll activities, employee benefits, health plans, retirement funds, insurance coverage, or other administrative functions? Please explain.	Yes ☒	No ☐
Does one (1) facility operation support the operation of the other facility?	Yes ☐	No ☒
Is one (1) facility dependent on the other? If one (1) facility shuts down, what are the limitations on the other to pursue outside business? Please explain.	Yes ☐	No ☒
Are there any financial arrangements between the two (2) entities?	Yes ☐ N/A	No ☐
Are there any legal or lease agreements between the two (2) facilities?	Yes ☐	No ☒
Do the facilities share products, byproducts, equipment, or other manufacturing or air pollution control device equipment? Please explain.	Yes ☐	No ☒
Do all the pollutant-emitting activities at the facilities belong to the same SIC Code? Please provide the SIC Codes. 1311	Yes ☒	No ☐
Was the location of the new facility chosen primarily because of its proximity to the existing facility to integrate the operation of the two (2) facilities? Please explain.	Yes ☐	No ☒
Will materials be routinely transferred between the two (2) facilities? Please explain the amount of transfer and how often the transfers take place and what percentages go to the various entities.	Yes ☐	No ☒
Does the facility influence production levels or compliance with environmental regulations at other facilities? Who accepts the responsibility for compliance with air quality requirements? Please explain.	Yes ☐	No ☒

ATTACHMENT A: SINGLE SOURCE DETERMINATION MAP

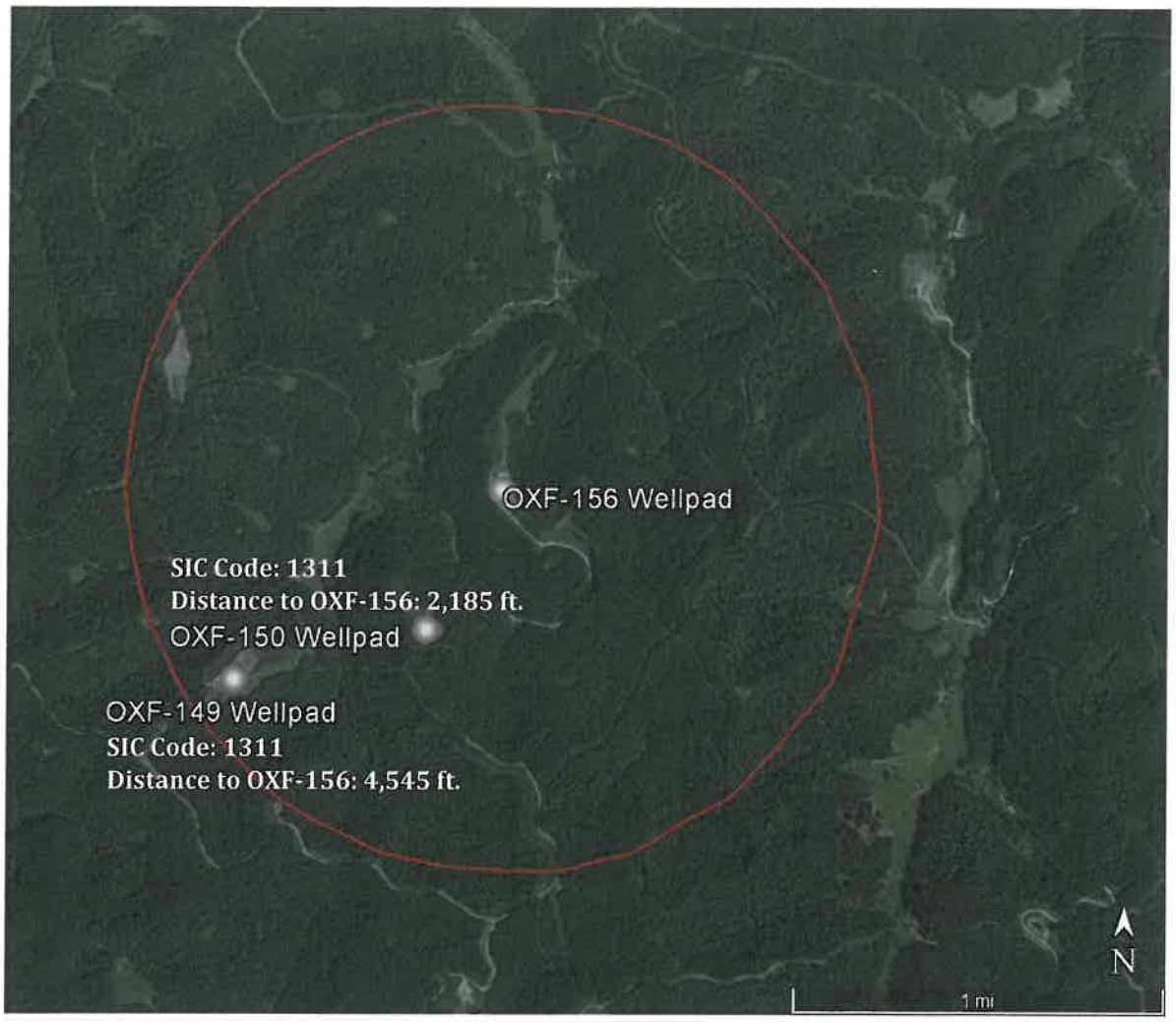

ATTACHMENT B

Siting Criteria Waiver *(Not Applicable)*

ATTACHMENT B - SITING CRITERIA WAIVER - NOT APPLICABLE

If applicable, please complete this form and it must be notarized.

G70-B General Permit
Siting Criteria Waiver

WV Division of Air Quality 300' Waiver

I _____ hereby
Print Name

acknowledge and agree that _____ will
General Permit Applicant's Name

construct an emission unit(s) at a natural gas production facility
that will be located within 300' of my dwelling and/or business.

I hereby offer this waiver of siting criteria to the West Virginia Department of Environmental Protection Division of Air Quality as permission to construct, install and operate in such location.

Signed:

_____
Signature Date

_____
Signature Date

Taken, subscribed and sworn before me this _____ day of

_____, 20_____.

My commission expires: _____

SEAL_____
Notary Public

ATTACHMENT C

Business Certificate

WEST VIRGINIA
STATE TAX DEPARTMENT
BUSINESS REGISTRATION CERTIFICATE

ISSUED TO:
EQT PRODUCTION COMPANY
625 LIBERTY AVE 1700
PITTSBURGH, PA 15222-3114

BUSINESS REGISTRATION ACCOUNT NUMBER: **1022-8081**

This certificate is issued on: 08/4/2010

This certificate is issued by
the West Virginia State Tax Commissioner
in accordance with Chapter 11, Article 12, of the West Virginia Code

The person or organization identified on this certificate is registered
to conduct business in the State of West Virginia at the location above.

This certificate is not transferrable and must be displayed at the location for which issued.
This certificate shall be permanent until cessation of the business for which the certificate of registration was granted or until it is suspended, revoked or cancelled by the Tax Commissioner.

Change in name or change of location shall be considered a cessation of the business and a new certificate shall be required.

TRAVELING/STREET VENDORS: Must carry a copy of this certificate in every vehicle operated by them.
CONTRACTORS, DRILLING OPERATORS, TIMBER/LOGGING OPERATIONS: Must have a copy of this certificate displayed at every job site within West Virginia.

atL006 v.3
L0553297664

ATTACHMENT D

Process Flow Diagram

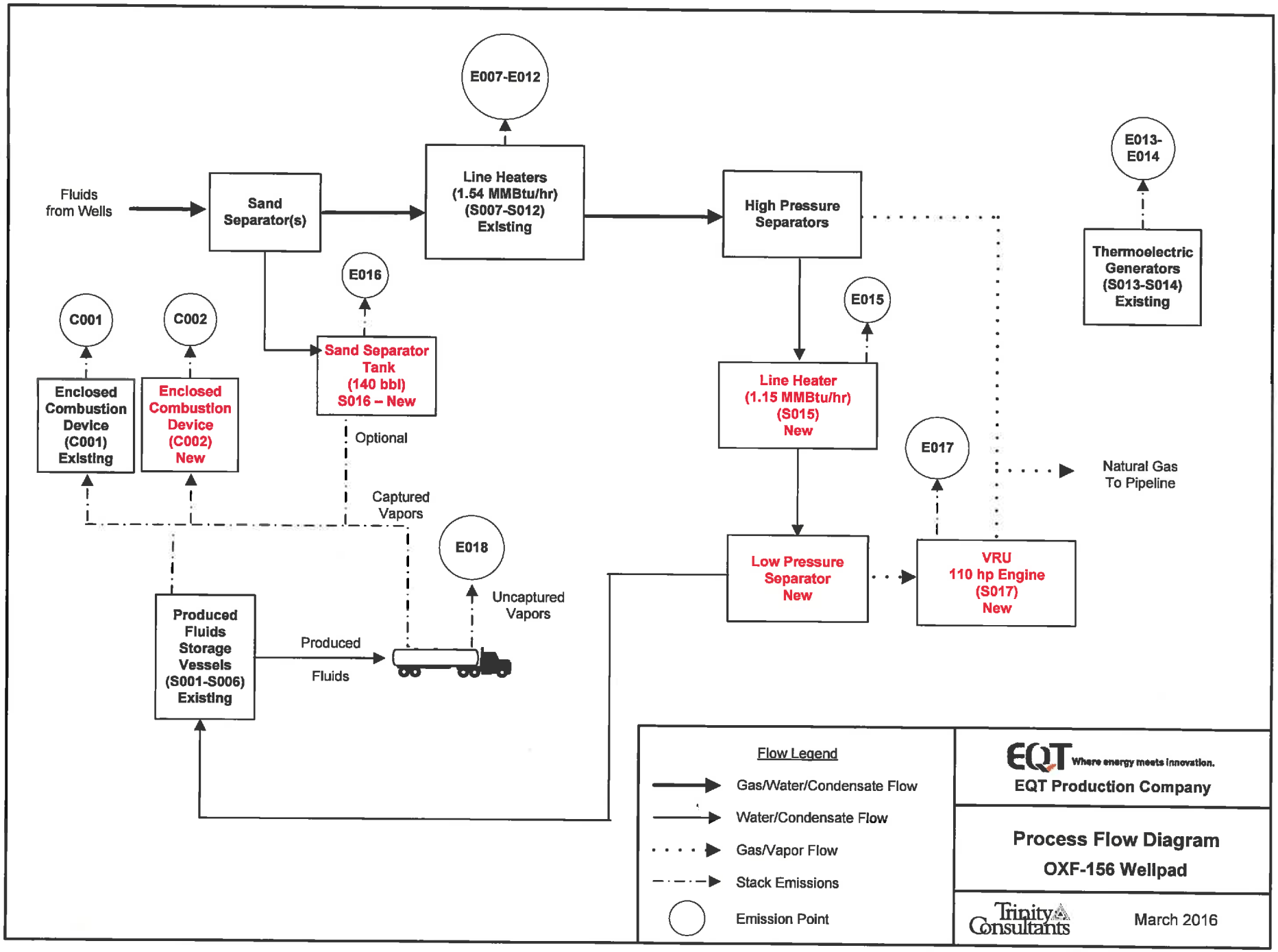
Fluids from Wells
Sand Separator(s)
E007-E012
Line Heaters (1.54 MMBtu/hr) (S007-S012) Existing
High Pressure Separators
E013-E014
Thermoelectric Generators (S013-S014) Existing
E016
Sand Separator Tank (140 bbl) S016 – New
C001
C002
Enclosed Combustion Device (C001) Existing
Enclosed Combustion Device (C002) New
Optional
Captured Vapors
E015
Line Heater (1.15 MMBtu/hr) (S015) New
E017
Natural Gas To Pipeline
E018
Uncaptured Vapors
Low Pressure Separator New
VRU 110 hp Engine (S017) New
Produced Fluids Storage Vessels (S001-S006) Existing
Produced Fluids
Flow Legend
Gas/Water/Condensate Flow
Water/Condensate Flow
Gas/Vapor Flow
Stack Emissions
Emission Point
EQT Where energy meets innovation.
EQT Production Company
Process Flow Diagram
OXF-156 Wellpad
Trinity Consultants
March 2016

ATTACHMENT E

Process Description

ATTACHMENT E: PROCESS DESCRIPTION

This G70-B Permit Application involves the permitting of a low pressure tower and associated heater (S015), vapor recovery unit (S017), sand separator storage tank (S016), and enclosed combustor (C002) at an existing natural gas production wellpad (OXF-156). The wellpad consists of five (5) drilled wells (4 in operation), each with the same basic operation.

The incoming gas/liquid stream from the underground well will pass through a sand separator, where sand, water, and residual solids are displaced and transferred to the sand separator tank (S016). The gas stream will then pass through a line heater (S007-S012) to raise/maintain temperature. The stream will then pass through a high pressure separator, which will separate gas (natural gas from the separator is sent to the sales line) from liquids (condensate and produced water). The liquids stream will then pass through a low pressure separator, where it is heated (S015) to volatilize (flash off) lighter hydrocarbons and separate condensate from water in the combined liquid stream. The flash gas from the condensate stream is recovered by the vapor recovery unit (S017), which utilizes a natural gas-fired engine driven compressor to raise the pressure of the flash gas and route it back into the natural gas pipeline. The condensate is then transferred to the produced fluid storage vessels (S001-S006).

Emissions from the storage vessels are controlled by an enclosed combustor (C001-C002). Once the tanks are filled, the contents are loaded into trucks for transport. EQT utilizes vapor balancing in the truck loading operations, which means the vapors displaced by the filling of tanker trucks (S018) are routed back into the battery of tanks and ultimately to the combustor. Facility electricity is provided by thermoelectric generators (S013-S014).

A process flow diagram is included as Attachment D.

ATTACHMENT F

Plot Plan

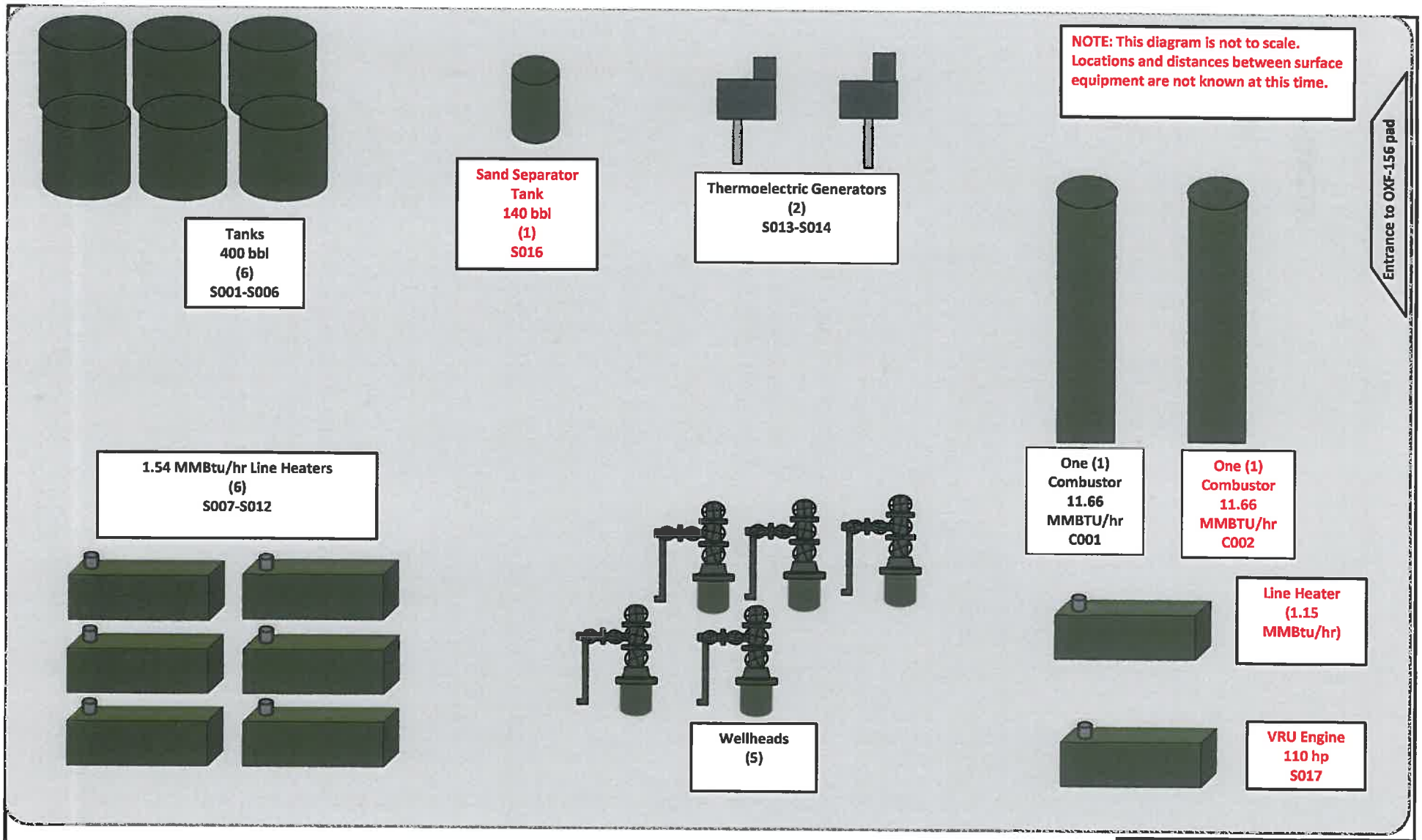

Attachment F

OXF-156 Well Pad Plot Plan

ATTACHMENT G

Area Map

ATTACHMENT G: AREA MAP

Figure 1 - Map of OXF-156 Location

UTM Northing (KM):	4,342.180
UTM Easting (KM):	518.419
Elevation:	~1,235 ft

ATTACHMENT H

Applicability Form

General Permit G70-B Registration
Section Applicability Form

General Permit G70-B was developed to allow qualified applicants to seek registration for a variety of sources. These sources include gas well affected facilities, storage vessels, gas production units, in-line heaters, heater treaters, glycol dehydration units and associated reboilers, pneumatic controllers, centrifugal compressors, reciprocating compressors, reciprocating internal combustion engines (RICEs), tank truck loading, fugitive emissions, completion combustion devices, flares, enclosed combustion devices, and vapor recovery systems. All registered facilities will be subject to Sections 1.0, 2.0, 3.0, and 4.0.

General Permit G70-B allows the registrant to choose which sections of the permit they are seeking registration under. Therefore, please mark which additional sections that you are applying for registration under. If the applicant is seeking registration under multiple sections, please select all that apply. Please keep in mind, that if this registration is approved, the issued registration will state which sections will apply to your affected facility.

GENERAL PERMIT G70-B APPLICABLE SECTIONS	
☒ Section 5.0	Gas Well Affected Facility (NSPS, Subpart OOOO)
☒ Section 6.0	Storage Vessels Containing Condensate and/or Produced Water[1]
☐ Section 7.0	Storage Vessel Affected Facility (NSPS, Subpart OOOO)
☒ Section 8.0	Control Devices and Emission Reduction Devices not subject to NSPS Subpart OOOO and/or NESHAP Subpart HH
☒ Section 9.0	Small Heaters and Reboilers not subject to 40CFR60 Subpart Dc
☐ Section 10.0	Pneumatic Controllers Affected Facility (NSPS, Subpart OOOO)
☐ Section 11.0	Centrifugal Compressor Affected Facility (NSPS, Subpart OOOO)[2]
☐ Section 12.0	Reciprocating Compressor Affected Facility (NSPS, Subpart OOOO)[2]
☒ Section 13.0	Reciprocating Internal Combustion Engines, Generator Engines, Microturbines
☒ Section 14.0	Tanker Truck Loading[3]
☐ Section 15.0	Glycol Dehydration Units[4]

1 *Applicants that are subject to Section 6 may also be subject to Section 7 if the applicant is subject to the NSPS, Subpart OOOO control requirements or the applicable control device requirements of Section 8.*

2 *Applicants that are subject to Section 11 and 12 may also be subject to the applicable RICE requirements of Section 13.*

3 *Applicants that are subject to Section 14 may also be subject to control device and emission reduction device requirements of Section 8.*

4 *Applicants that are subject to Section 15 may also be subject to the requirements of Section 9 (reboilers). Applicants that are subject to Section 15 may also be subject to control device and emission reduction device requirements of Section 8.*

ATTACHMENT I

Emission Units Table

ATTACHMENT I – EMISSION UNITS / EMISSION REDUCTION DEVICES (ERD) TABLE

Include ALL emission units and air pollution control devices/ERDs that will be part of this permit application review. Do not include fugitive emission sources in this table. Deminimis storage tanks shall be listed in the Attachment L table. This information is required for all sources regardless of whether it is a construction, modification, or administrative update.

Emission Unit ID[1]	Emission Point ID[2]	Emission Unit Description	Year Installed	Manufac. Date[3]	Design Capacity	Type[4] and Date of Change	Control Device(s)[5]	ERD(s)[6]
S001	C001 – C002	Produced Fluid Storage Tank	2013	2013	400 bbl	Existing; No change	C001 – C002	---
S002	C001 – C002	Produced Fluid Storage Tank	2013	2013	400 bbl	Existing; No change	C001 – C002	---
S003	C001 – C002	Produced Fluid Storage Tank	2013	2013	400 bbl	Existing; No change	C001 – C002	---
S004	C001 – C002	Produced Fluid Storage Tank	2013	2013	400 bbl	Existing; No change	C001 – C002	---
S005	C001 – C002	Produced Fluid Storage Tank	2013	2013	400 bbl	Existing; No change	C001 – C002	---
S006	C001 – C002	Produced Fluid Storage Tank	2013	2013	400 bbl	Existing; No change	C001 – C002	---
S007	E007	Line Heater	2013	2013	1.54 MMBtu/hr	Existing; No change	None	---
S008	E008	Line Heater	2013	2013	1.54 MMBtu/hr	Existing; No change	None	---
S009	E009	Line Heater	2013	2013	1.54 MMBtu/hr	Existing; No change	None	---
S010	E010	Line Heater	2013	2013	1.54 MMBtu/hr	Existing; No change	None	---
S011	E011	Line Heater	2013	2013	1.54 MMBtu/hr	Existing; No change	None	---
S012	E012	Line Heater	2013	2013	1.54 MMBtu/hr	Existing; No change	None	---
S013	E013	Thermoelectric Generator	2013	2013	0.013 MMBtu/hr	Existing; No change	None	---
S014	E014	Thermoelectric Generator	2013	2013	0.013 MMBtu/hr	Existing; No change	None	---

S015	E015	Line Heater	TBD	TBD	1.15 MMBtu/hr	New	None	---
S016	E016	Sand Separator Storage Tank	TBD	TBD	140 bbl	New	None	
S017	E017	VRU Engine	TBD	TBD	110 hp	New	None	---
S018	E018 (Uncaptured) C001–C002 (Controlled, Captured)	Liquid Loading	2013	2013	23,700,180	Modified; Increase throughput	C001 – C002	---
C001	C001	Tank Combustor	2013	2013	11.66 MMBtu/hr	Existing; No change	NA	---
C002	C002	Tank Combustor	TBD	TBD	11.66 MMBtu/hr	New	NA	---

[1] For Emission Units (or Sources) use the following numbering system:1S, 2S, 3S,... or other appropriate designation.
[2] For Emission Points use the following numbering system:1E, 2E, 3E, ... or other appropriate designation.
When required by rule
[4] New, modification, removal, existing
[5] For Control Devices use the following numbering system: 1C, 2C, 3C,... or other appropriate designation.
[6] For ERDs use the following numbering system: 1D, 2D, 3D,... or other appropriate designation.

ATTACHMENT J

Fugitive Emissions Summary Sheet

ATTACHMENT J – FUGITIVE EMISSIONS SUMMARY SHEET

Sources of fugitive emissions may include loading operations, equipment leaks, blowdown emissions, etc.
Use extra pages for each associated source or equipment if necessary.

Source/Equipment: Fugitive Emissions

Leak Detection Method Used	☐ Audible, visual, and olfactory (AVO) inspections	☐ Infrared (FLIR) cameras	☒ Other (please describe) Will satisfy condition 4.1.4. of the G70-B	☐ None required

Component Type	Closed Vent System	Count	Source of Leak Factors (EPA, other (specify))	Stream type (gas, liquid, etc.)	Estimated Emissions (tpy)		
					VOC	HAP	GHG (CO_2e)
Pumps	☐ Yes ☒ No	11	U.S. EPA. Office of Air Quality Planning and Standards. Protocol for Equipment Leak Emission Estimates. Table 2-1. (EPA-453/R-95-017, 1995).	☐ Gas ☒ Liquid ☐ Both	2.02	0.08	0.39
Valves	☐ Yes ☒ No	356	U.S. EPA. Office of Air Quality Planning and Standards. Protocol for Equipment Leak Emission Estimates. Table 2-1. (EPA-453/R-95-017, 1995).	☒ Gas ☐ Liquid ☐ Both	3.21	0.12	35.76
Safety Relief Valves	☐ Yes ☒ No	25	U.S. EPA. Office of Air Quality Planning and Standards. Protocol for Equipment Leak Emission Estimates. Table 2-1. (EPA-453/R-95-017, 1995).	☒ Gas ☐ Liquid ☐ Both	3.86	0.15	3.65
Open Ended Lines	☐ Yes ☒ No	26	U.S. EPA. Office of Air Quality Planning and Standards. Protocol for Equipment Leak Emission Estimates. Table 2-1. (EPA-453/R-95-017, 1995).	☐ Gas ☐ Liquid ☒ Both	0.07	<0.01	5.79
Sampling Connections	☐ Yes ☐ No	0	N/A	☐ Gas ☐ Liquid ☐ Both	---	---	---
Connections (Not sampling)	☐ Yes ☒ No	1,578	U.S. EPA. Office of Air Quality Planning and Standards. Protocol for Equipment Leak Emission Estimates. Table 2-1. (EPA-453/R-95-017, 1995).	☐ Gas ☐ Liquid ☒ Both	4.37	0.17	17.63
Compressors	☐ Yes ☒ No	1	(included in other component counts)	☒ Gas ☐ Liquid ☐ Both	0.35	0.01	15.53
Flanges	☐ Yes ☐ No	---	(included in connections)	☐ Gas ☐ Liquid ☐ Both	---	---	---
Other[1]	☐ Yes ☒ No	30	40 CFR 98 Subpart W	☒ Gas ☐ Liquid ☐ Both	4.94	0.19	223.51

[1] Other equipment types may include compressor seals, relief valves, diaphragms, drains, meters, etc.

Please provide an explanation of the sources of fugitive emissions (e.g. pigging operations, equipment blowdowns, pneumatic controllers, etc.):
Pneumatic Controller count is 'Other' category. An estimate of Miscellaneous Gas Venting emissions are included in the Emission Calculations and serve to include such sources as compressor venting, pigging, vessel blowdowns and other sources.

Please indicate if there are any closed vent bypasses (include component): N/A

Specify all equipment used in the closed vent system (e.g. VRU, ERD, thief hatches, tanker truck loading, etc.) N/A

ATTACHMENT K

Gas Well Data Sheet

ATTACHMENT K – GAS WELL AFFECTED FACILITY DATA SHEET

Complete this data sheet if you are the owner or operator of a gas well affected facility for which construction, modification or reconstruction commenced after August 23, 2011. This form must be completed for natural gas well affected facilities regardless of when flowback operations occur (or have occurred).

API Number	Date of Flowback	Date of Well Completion	Green Completion and/or Combustion Device
047-017-06326	2/19/2015	2/19/2015	Green
047-017-06328	2/24/2015	2/24/2015	Green
047-017-06329	2/28/2015	2/28/2015	Green
047-017-06330	Planned	Planned	Green
047-017-06331	2/13/2015	2/13/2015	Green

Note: If future wells are planned and no API number is available please list as PLANNED. If there are existing wells that commenced construction prior to August 23, 2011, please acknowledge as existing.

This is the same API (American Petroleum Institute) well number(s) provided in the well completion notification and as provided to the WVDEP, Office of Oil and Gas for the well permit. The API number may be provided on the application without the state code (047).

Every oil and gas well permitted in West Virginia since 1929 has been issued an API number. This API is used by agencies to identify and track oil and gas wells.

The API number has the following format: 047-001-00001

Where,

047 =	*State code. The state code for WV is 047.*
001 =	*County Code. County codes are odd numbers, beginning with 001 (Barbour) and continuing to 109 (Wyoming).*
00001=	*Well number. Each well will have a unique well number.*

ATTACHMENT L

Storage Vessel Data Sheet

ATTACHMENT L – STORAGE VESSEL DATA SHEET

Complete this data sheet if you are the owner or operator of a storage vessel that contains condensate and/or produced water. This form must be completed for ***each*** new or modified bulk liquid storage vessel(s) that contains condensate and/or produced water . (If you have more than one (1) identical tank (i.e. 4-400 bbl condensate tanks), then you can list all on one (1) data sheet). **Include gas sample analysis, flashing emissions, working and breathing losses, USEPA Tanks, simulation software (ProMax, E&P Tanks, HYSYS, etc.), and any other supporting documents where applicable.**

The following information is REQUIRED:

☒ Composition of the representative sample used for the simulation
☒ For each stream that contributes to flashing emissions:
- ☒ Temperature and pressure (inlet and outlet from separator(s))
- ☒ Simulation-predicted composition
- ☒ Molecular weight
- ☒ Flow rate

☒ Resulting flash emission factor or flashing emissions from simulation
☒ Working/breathing loss emissions from tanks and/or loading emissions if simulation is used to quantify those emissions

Additional information may be requested if necessary.

GENERAL INFORMATION (REQUIRED)

1. Bulk Storage Area Name OXF-156 Pad	2. Tank Name Produced Fluid Tanks (water and condensate)
3. Emission Unit ID number S001-S006	4. Emission Point ID number C001-C002
5. Date Installed , Modified or Relocated *(for existing tanks)* Was the tank manufactured after August 23, 2011? ☒ Yes ☐ No	6. Type of change: N/A ☐ New construction ☐ New stored material ☐ Other (Low Pressure Tower) ☐ Relocation
7A. Description of Tank Modification *(if applicable)* N/A	
7B. Will more than one material be stored in this tank? *If so, a separate form must be completed for each material.* ☐ Yes ☒ No	
7C. Was USEPA Tanks simulation software utilized? ☐ Yes ☒ No ***If Yes, please provide the appropriate documentation and items 8-42 below are not required.***	

TANK INFORMATION

8. Design Capacity *(specify barrels or gallons)*. Use the internal cross-sectional area multiplied by internal height. 400 bbls	
9A. Tank Internal Diameter (ft.) 12	9B. Tank Internal Height (ft.) 20
10A. Maximum Liquid Height (ft.) 20	10B. Average Liquid Height (ft.) 10
11A. Maximum Vapor Space Height (ft.) 20	11B. Average Vapor Space Height (ft.) 10
12. Nominal Capacity *(specify barrels or gallons)*. This is also known as "working volume". 400 bbls	
13A. Maximum annual throughput (gal/yr) **See attached emissions calculations for all throughput values**	13B. Maximum daily throughput (gal/day) **See attached emissions calculations for all throughput values**
14. Number of tank turnovers per year **See attached emissions calculations for all throughput values**	15. Maximum tank fill rate (gal/min) **See attached emissions calculations for all throughput values**
16. Tank fill method ☐ Submerged ☒ Splash ☐ Bottom Loading	
17. Is the tank system a variable vapor space system? ☐ Yes ☒ No If yes, (A) What is the volume expansion capacity of the system (gal)? (B) What are the number of transfers into the system per year?	
18. Type of tank (check all that apply): ☒ Fixed Roof ☒ vertical ☐ horizontal ☐ flat roof ☒ cone roof ☐ dome roof ☐ other (describe) ☐ External Floating Roof ☐ pontoon roof ☐ double deck roof ☐ Domed External (or Covered) Floating Roof ☐ Internal Floating Roof ☐ vertical column support ☐ self-supporting ☐ Variable Vapor Space ☐ lifter roof ☐ diaphragm ☐ Pressurized ☐ spherical ☐ cylindrical ☐ Other (describe)	

PRESSURE/VACUUM CONTROL DATA

19. Check as many as apply:

☐ Does Not Apply ☐ Rupture Disc (psig)

☐ Inert Gas Blanket of _____ ☐ Carbon Adsorption[1]

☒ Vent to Vapor Combustion Device[1] (vapor combustors, flares, thermal oxidizers, enclosed combustors)

☒ Conservation Vent (psig) ☐ Condenser[1]

0.5 oz Vacuum Setting 14 oz Pressure Setting

☒ Emergency Relief Valve (psig)

Vacuum Setting 16 oz Pressure Setting

☐ Thief Hatch Weighted ☐ Yes ☒ No – Cashco Lockdown Hatch

[1] Complete appropriate Air Pollution Control Device Sheet

20. Expected Emission Rate (submit Test Data or Calculations here or elsewhere in the application).

Material Name	Flashing Loss		Breathing Loss		Working Loss		Total Emissions Loss		Estimation Method[1]
	lb/hr	tpy	lb/hr	tpy	lb/hr	tpy	lb/hr	tpy	
See attached Emissions Calculation for all values									

[1] EPA = EPA Emission Factor, MB = Material Balance, SS = Similar Source, ST = Similar Source Test, Throughput Data, O = Other (specify)

Remember to attach emissions calculations, including TANKS Summary Sheets and other modeling summary sheets if applicable.

TANK CONSTRUCTION AND OPERATION INFORMATION		
21. Tank Shell Construction: ☐ Riveted ☐ Gunite lined ☐ Epoxy-coated rivets ☒ Other (describe) Welded or riveted		
21A. Shell Color: Green	21B. Roof Color: Green	21C. Year Last Painted: New
22. Shell Condition (if metal and unlined): ☒ No Rust ☐ Light Rust ☐ Dense Rust ☐ Not applicable		
22A. Is the tank heated? ☐ Yes ☒ No	22B. If yes, operating temperature:	22C. If yes, how is heat provided to tank?
23. Operating Pressure Range (psig): **Must be listed for tanks using VRUs with closed vent system.**		
24. Is the tank a **Vertical Fixed Roof Tank**? ☒ Yes ☐ No	24A. If yes, for dome roof provide radius (ft):	24B. If yes, for cone roof, provide slop (ft/ft): 0.06
25. Complete item 25 for **Floating Roof Tanks** ☐ Does not apply ☒		
25A. Year Internal Floaters Installed:		
25B. Primary Seal Type *(check one)*: ☐ Metallic (mechanical) shoe seal ☐ Liquid mounted resilient seal ☐ Vapor mounted resilient seal ☐ Other (describe):		
25C. Is the Floating Roof equipped with a secondary seal? ☐ Yes ☐ No		
25D. If yes, how is the secondary seal mounted? *(check one)* ☐ Shoe ☐ Rim ☐ Other (describe):		
25E. Is the floating roof equipped with a weather shield? ☐ Yes ☐ No		
25F. Describe deck fittings:		
26. Complete the following section for **Internal Floating Roof Tanks** ☒ Does not apply		
26A. Deck Type: ☐ Bolted ☐ Welded	26B. For bolted decks, provide deck construction:	
26C. Deck seam. Continuous sheet construction: ☐ 5 ft. wide ☐ 6 ft. wide ☐ 7 ft. wide ☐ 5 x 7.5 ft. wide ☐ 5 x 12 ft. wide ☐ other (describe)		
26D. Deck seam length (ft.):	26E. Area of deck (ft^2):	26F. For column supported tanks, # of columns: / 26G. For column supported tanks, diameter of column:
27. Closed Vent System with VRU? ☐ Yes ☒ No		
28. Closed Vent System with Enclosed Combustor? ☒ Yes ☐ No		
SITE INFORMATION - Not Applicable: Tank calculations performed using ProMax software		
29. Provide the city and state on which the data in this section are based:		
30. Daily Avg. Ambient Temperature (°F):	31. Annual Avg. Maximum Temperature (°F):	
32. Annual Avg. Minimum Temperature (°F):	33. Avg. Wind Speed (mph):	
34. Annual Avg. Solar Insulation Factor (BTU/ft^2-day):	35. Atmospheric Pressure (psia):	
LIQUID INFORMATION - Not Applicable: Tank calculations performed using ProMax software		
36. Avg. daily temperature range of bulk liquid (°F):	36A. Minimum (°F):	36B. Maximum (°F):
37. Avg. operating pressure range of tank (psig):	37A. Minimum (psig):	37B. Maximum (psig):
38A. Minimum liquid surface temperature (°F):	38B. Corresponding vapor pressure (psia):	
39A. Avg. liquid surface temperature (°F):	39B. Corresponding vapor pressure (psia):	
40A. Maximum liquid surface temperature (°F):	40B. Corresponding vapor pressure (psia):	
41. Provide the following for each liquid or gas to be stored in the tank. Add additional pages if necessary.		

41A. Material name and composition:			
41B. CAS number:			
41C. Liquid density (lb/gal):			
41D. Liquid molecular weight (lb/lb-mole):			
41E. Vapor molecular weight (lb/lb-mole):			
41F. Maximum true vapor pressure (psia):			
41G. Maximum Reid vapor pressure (psia):			
41H. Months Storage per year. From: To:			
42. Final maximum gauge pressure and temperature prior to transfer into tank used as inputs into flashing emission calculations.			

GENERAL INFORMATION (REQUIRED)

1. Bulk Storage Area Name OXF-156 Pad	2. Tank Name Sand Separator Tank
3. Emission Unit ID number S016	4. Emission Point ID number E016
5. Date Installed , Modified or Relocated *(for existing tanks)* Was the tank manufactured after August 23, 2011? ☒ Yes ☐ No	6. Type of change: ☒ New construction ☐ New stored material ☐ Other (Low Pressure Tower) ☐ Relocation
7A. Description of Tank Modification *(if applicable)* N/A	
7B. Will more than one material be stored in this tank? *If so, a separate form must be completed for each material.* ☐ Yes ☒ No	
7C. Was USEPA Tanks simulation software utilized? ☐ Yes ☒ No ***If Yes, please provide the appropriate documentation and items 8-42 below are not required.***	

TANK INFORMATION

8. Design Capacity *(specify barrels or gallons)*. Use the internal cross-sectional area multiplied by internal height. 140 bbls	
9A. Tank Internal Diameter (ft.) 10	9B. Tank Internal Height (ft.) 10
10A. Maximum Liquid Height (ft.) 10	10B. Average Liquid Height (ft.) 5
11A. Maximum Vapor Space Height (ft.) 10	11B. Average Vapor Space Height (ft.) 5
12. Nominal Capacity *(specify barrels or gallons)*. This is also known as "working volume". 140 bbls	
13A. Maximum annual throughput (gal/yr) **See attached emissions calculations for all throughput values**	13B. Maximum daily throughput (gal/day) **See attached emissions calculations for all throughput values**
14. Number of tank turnovers per year **See attached emissions calculations for all throughput values**	15. Maximum tank fill rate (gal/min) **See attached emissions calculations for all throughput values**
16. Tank fill method ☐ Submerged ☒ Splash ☐ Bottom Loading	
17. Is the tank system a variable vapor space system? ☐ Yes ☒ No If yes, (A) What is the volume expansion capacity of the system (gal)? (B) What are the number of transfers into the system per year?	
18. Type of tank (check all that apply): ☒ Fixed Roof ☐ vertical ☒ horizontal ☐ flat roof ☐ cone roof ☐ dome roof ☐ other (describe) ☐ External Floating Roof ☐ pontoon roof ☐ double deck roof ☐ Domed External (or Covered) Floating Roof ☐ Internal Floating Roof ☐ vertical column support ☐ self-supporting ☐ Variable Vapor Space ☐ lifter roof ☐ diaphragm ☐ Pressurized ☐ spherical ☐ cylindrical	

PRESSURE/VACUUM CONTROL DATA

19. Check as many as apply:

☒ Does Not Apply ☐ Rupture Disc (psig)

☐ Inert Gas Blanket of _____ ☐ Carbon Adsorption[1]

☐ Vent to Vapor Combustion Device[1] (vapor combustors, flares, thermal oxidizers, enclosed combustors)

☐ Conservation Vent (psig) ☐ Condenser[1]

Vacuum Setting Pressure Setting

☐ Emergency Relief Valve (psig)

Vacuum Setting Pressure Setting

☐ Thief Hatch Weighted ☐ Yes ☐ No

[1] Complete appropriate Air Pollution Control Device Sheet

20. Expected Emission Rate (submit Test Data or Calculations here or elsewhere in the application).

Material Name	Flashing Loss		Breathing Loss		Working Loss		Total Emissions Loss		Estimation Method[1]
	lb/hr	tpy	lb/hr	tpy	lb/hr	tpy	lb/hr	tpy	
See attached Emissions Calculation for all values									

[1] EPA = EPA Emission Factor, MB = Material Balance, SS = Similar Source, ST = Similar Source Test, Throughput Data, O = Other (specify)
Remember to attach emissions calculations, including TANKS Summary Sheets and other modeling summary sheets if applicable.

TANK CONSTRUCTION AND OPERATION INFORMATION

21. Tank Shell Construction:
☐ Riveted ☐ Gunite lined ☐ Epoxy-coated rivets ☒ Other (describe) Welded

21A. Shell Color: Gray	21B. Roof Color: Gray	21C. Year Last Painted: New

22. Shell Condition (if metal and unlined):
☒ No Rust ☐ Light Rust ☐ Dense Rust ☐ Not applicable

22A. Is the tank heated? ☐ Yes ☒ No	22B. If yes, operating temperature:	22C. If yes, how is heat provided to tank?

23. Operating Pressure Range (psig):
Must be listed for tanks using VRUs with closed vent system.

24. Is the tank a **Vertical Fixed Roof Tank**? ☐ Yes ☒ No	24A. If yes, for dome roof provide radius (ft):	24B. If yes, for cone roof, provide slop (ft/ft):

25. Complete item 25 for **Floating Roof Tanks** ☐ Does not apply ☒

25A. Year Internal Floaters Installed:

25B. Primary Seal Type *(check one)*: ☐ Metallic (mechanical) shoe seal ☐ Liquid mounted resilient seal ☐ Vapor mounted resilient seal ☐ Other (describe):

25C. Is the Floating Roof equipped with a secondary seal? ☐ Yes ☐ No

25D. If yes, how is the secondary seal mounted? *(check one)* ☐ Shoe ☐ Rim ☐ Other (describe):

25E. Is the floating roof equipped with a weather shield? ☐ Yes ☐ No

25F. Describe deck fittings:

26. Complete the following section for **Internal Floating Roof Tanks** ☒ Does not apply

26A. Deck Type: ☐ Bolted ☐ Welded	26B. For bolted decks, provide deck construction:

26C. Deck seam. Continuous sheet construction:
☐ 5 ft. wide ☐ 6 ft. wide ☐ 7 ft. wide ☐ 5 x 7.5 ft. wide ☐ 5 x 12 ft. wide ☐ other (describe)

26D. Deck seam length (ft.):	26E. Area of deck (ft^2):	26F. For column supported tanks, # of columns:	26G. For column supported tanks, diameter of column:

27. Closed Vent System with VRU? ☐ Yes ☒ No

28. Closed Vent System with Enclosed Combustor? ☐ Yes ☒ No

SITE INFORMATION - Not Applicable: Tank calculations performed using E&P Tank software

29. Provide the city and state on which the data in this section are based:

30. Daily Avg. Ambient Temperature (°F):	31. Annual Avg. Maximum Temperature (°F):
32. Annual Avg. Minimum Temperature (°F):	33. Avg. Wind Speed (mph):
34. Annual Avg. Solar Insulation Factor (BTU/ft^2-day):	35. Atmospheric Pressure (psia):

LIQUID INFORMATION - Not Applicable: Tank calculations performed using E&P Tank software

36. Avg. daily temperature range of bulk liquid (°F):	36A. Minimum (°F):	36B. Maximum (°F):
37. Avg. operating pressure range of tank (psig):	37A. Minimum (psig):	37B. Maximum (psig):

38A. Minimum liquid surface temperature (°F):	38B. Corresponding vapor pressure (psia):
39A. Avg. liquid surface temperature (°F):	39B. Corresponding vapor pressure (psia):
40A. Maximum liquid surface temperature (°F):	40B. Corresponding vapor pressure (psia):

41. Provide the following for each liquid or gas to be stored in the tank. Add additional pages if necessary.

41A. Material name and composition:			
41B. CAS number:			
41C. Liquid density (lb/gal):			
41D. Liquid molecular weight (lb/lb-mole):			
41E. Vapor molecular weight (lb/lb-mole):			
41F. Maximum true vapor pressure (psia):			
41G. Maximum Reid vapor pressure (psia):			
41H. Months Storage per year. From: To:			
42. Final maximum gauge pressure and temperature prior to transfer into tank used as inputs into flashing emission calculations.			

STORAGE TANK DATA TABLE

List all deminimis storage tanks (i.e. lube oil, glycol, diesel etc.)

Source ID #[1]	Status[2]	Content[3]	Volume[4]
Not Applicable			

1. Enter the appropriate Source Identification Numbers (Source ID #) for each storage tank located at the compressor station. Tanks should be designated T01, T02, T03, etc.
2. Enter storage tank Status using the following:
   - EXIST Existing Equipment
   - NEW Installation of New Equipment
   - REM Equipment Removed
3. Enter storage tank content such as condensate, pipeline liquids, glycol (DEG or TEG), lube oil, diesel, mercaptan etc.
4. Enter the maximum design storage tank volume in gallons.

ATTACHMENT M

Heaters Data Sheet

ATTACHMENT M – SMALL HEATERS AND REBOILERS NOT SUBJECT TO 40CFR60 SUBPART DC DATA SHEET

Complete this data sheet for each small heater and reboiler not subject to 40CFR60 Subpart Dc at the facility. ***The Maximum Design Heat Input (MDHI) must be less than 10 MMBTU/hr.***

Emission Unit ID#[1]	Emission Point ID#[2]	Emission Unit Description (manufacturer, model #)	Year Installed/ Modified	Type[3] and Date of Change	Maximum Design Heat Input (MMBTU/hr)[4]	Fuel Heating Value (BTU/scf)[5]
S007	E007	Line Heater	2013	Existing; No change	1.54	~1,226
S008	E008	Line Heater	2013	Existing; No change	1.54	~1,226
S009	E009	Line Heater	2013	Existing; No change	1.54	~1,226
S010	E010	Line Heater	2013	Existing; No change	1.54	~1,226
S011	E011	Line Heater	2013	Existing; No change	1.54	~1,226
S012	E012	Line Heater	2013	Existing; No change	1.54	~1,226
S013	E013	Thermoelectric Generator	2013	Existing; No change	0.013	~1,226
S014	E014	Thermoelectric Generator	2013	Existing; No change	0.013	~1,226
S015	E015	Line Heater	TBD	New	1.15	~1,226

1 Enter the appropriate Emission Unit (or Source) identification number for each fuel burning unit located at the production pad. Gas Producing Unit Burners should be designated GPU-1, GPU-2, etc. Heater Treaters should be designated HT-1, HT-2, etc. Heaters or Line Heaters should be designated LH-1, LH-2, etc. For sources, use 1S, 2S, 3S…or other appropriate designation. Enter glycol dehydration unit Reboiler Vent data on the Glycol Dehydration Unit Data Sheet.

2 Enter the appropriate Emission Point identification numbers for each fuel burning unit located at the production pad. Gas Producing Unit Burners should be designated GPU-1, GPU-2, etc. Heater Treaters should be designated HT-1, HT-2, etc. Heaters or Line Heaters should be designated LH-1, LH-2, etc. For emission points, use 1E, 2E, 3E…or other appropriate designation.

3 New, modification, removal

4 Enter design heat input capacity in MMBtu/hr.

5 Enter the fuel heating value in BTU/standard cubic foot.

ATTACHMENT N

Engines Data Sheet

ATTACHMENT N – INTERNAL COMBUSTION ENGINE DATA SHEET

Complete this data sheet for each internal combustion engine at the facility. Include manufacturer performance data sheet(s) or any other supporting document if applicable. Use extra pages if necessary. *Generator(s) and microturbine generator(s) shall also use this form.*

Emission Unit ID#[1]	S017		
Engine Manufacturer/Model	Ford CSG-637		
Manufacturers Rated bhp/rpm	110		
Source Status[2]	NS		
Date Installed/ Modified/Removed/Relocated[3]	TBD		
Engine Manufactured /Reconstruction Date[4]	> July 2010		
Check all applicable Federal Rules for the engine (include EPA Certificate of Conformity if applicable)[5]	☒40CFR60 Subpart JJJJ ☒JJJJ Certified? ☐40CFR60 Subpart IIII ☐IIII Certified? ☒40CFR63 Subpart ZZZZ ☐ NESHAP ZZZZ/ NSPS JJJJ Window ☐ NESHAP ZZZZ Remote Sources	☐40CFR60 Subpart JJJJ ☐JJJJ Certified? ☐40CFR60 Subpart IIII ☐IIII Certified? ☐40CFR63 Subpart ZZZZ ☐ NESHAP ZZZZ/ NSPS JJJJ Window ☐ NESHAP ZZZZ Remote Sources	☐40CFR60 Subpart JJJJ ☐JJJJ Certified? ☐40CFR60 Subpart IIII ☐IIII Certified? ☐40CFR63 Subpart ZZZZ ☐ NESHAP ZZZZ/ NSPS JJJJ Window ☐ NESHAP ZZZZ Remote Sources
Engine Type[6]	4SRB		
APCD Type[7]	NSCR		
Fuel Type[8]	PQNG		
H_2S (gr/100 scf)	0		
Operating bhp/rpm	110		
BSFC (BTU/bhp-hr)	7,000		
Hourly Fuel Throughput	733 ft^3/hr NA gal/hr	ft^3/hr gal/hr	ft^3/hr gal/hr
Annual Fuel Throughput (Must use 8,760 hrs/yr unless emergency generator)	6.4 $MMft^3$/yr NA gal/yr	$MMft^3$/yr gal/yr	$MMft^3$/yr gal/yr
Fuel Usage or Hours of Operation Metered	Yes ☒ No ☐	Yes ☐ No ☐	Yes ☐ No ☐

Calculation Methodology[9]	Pollutant[10]	Hourly PTE (lb/hr)[11]	Annual PTE (tons/year)[11]	Hourly PTE (lb/hr)[11]	Annual PTE (tons/year)[11]	Hourly PTE (lb/hr)[11]	Annual PTE (tons/year)[11]
	NO_x	0.24	1.06				
	CO	0.49	2.12				
	VOC	0.17	0.74				
	SO_2	<0.01	<0.01				
	PM_{10}	0.01	0.07				
	Formaldehyde	0.02	0.07				
	Total HAPs	0.02	0.11				
	GHG (CO_2e)	90	395				

1 Enter the appropriate Source Identification Number for each natural gas-fueled reciprocating internal combustion compressor/generator engine located at the compressor station. Multiple compressor engines should be designated CE-1, CE-2, CE-3 etc. Generator engines should be designated GE-1, GE-2, GE-3 etc. Microturbine generator engines should be designated MT-1, MT-2, MT-3 etc. If more than three (3) engines exist, please use additional sheets.

2 Enter the Source Status using the following codes:

NS	Construction of New Source (installation)	ES	Existing Source
MS	Modification of Existing Source	RS	Relocated Source

REM Removal of Source

3 Enter the date (or anticipated date) of the engine's installation (construction of source), modification, relocation or removal.

4 Enter the date that the engine was manufactured, modified or reconstructed.

5 Is the engine a certified stationary spark ignition internal combustion engine according to 40CFR60 Subpart IIII/JJJJ? If so, the engine and control device must be operated and maintained in accordance with the manufacturer's emission-related written instructions. You must keep records of conducted maintenance to demonstrate compliance, but no performance testing is required. If the certified engine is not operated and maintained in accordance with the manufacturer's emission-related written instructions, the engine will be considered a non-certified engine and you must demonstrate compliance as appropriate.

Provide a manufacturer's data sheet for all engines being registered.

6 Enter the Engine Type designation(s) using the following codes:

2SLB	Two Stroke Lean Burn	4SRB	Four Stroke Rich Burn
4SLB	Four Stroke Lean Burn		

7 Enter the Air Pollution Control Device (APCD) type designation(s) using the following codes:

A/F	Air/Fuel Ratio	IR	Ignition Retard
HEIS	High Energy Ignition System	SIPC	Screw-in Precombustion Chambers
PSC	Prestratified Charge	LEC	Low Emission Combustion
NSCR	Rich Burn & Non-Selective Catalytic Reduction	OxCat	Oxidation Catalyst
SCR	Lean Burn & Selective Catalytic Reduction		

8 Enter the Fuel Type using the following codes:

PQ	Pipeline Quality Natural Gas	RG	Raw Natural Gas /Production Gas	D	Diesel

9 Enter the Potential Emissions Data Reference designation using the following codes. Attach all reference data used.

MD	Manufacturer's Data	AP	AP-42	
GR	GRI-HAPCalc™	OT	Other	(please list)

10 Enter each engine's Potential to Emit (PTE) for the listed regulated pollutants in pounds per hour and tons per year. PTE shall be calculated at manufacturer's rated brake horsepower and may reflect reduction efficiencies of listed Air Pollution Control Devices. Emergency generator engines may use 500 hours of operation when calculating PTE. PTE data from this data sheet shall be incorporated in the *Emissions Summary Sheet.*

11 PTE for engines shall be calculated from manufacturer's data unless unavailable.

Engine Air Pollution Control Device
(Emission Unit ID# S017, use extra pages as necessary)

Air Pollution Control Device Manufacturer's Data Sheet included?
Yes ☒ No ☐
See attached certification

☒ NSCR ☐ SCR ☐ Oxidation Catalyst

Provide details of process control used for proper mixing/control of reducing agent with gas stream:
Sequential Multipart Fuel Injection

Manufacturer: Ford	Model #: CSG-637
Design Operating Temperature: 1600 °F	Design gas volume: scfm
Service life of catalyst: 5000 hours	Provide manufacturer data? ☐Yes ☐ No
Volume of gas handled: 444.9 acfm at 1600 °F	Operating temperature range for NSCR/Ox Cat: From °F to °F
Reducing agent used, if any:	Ammonia slip (ppm):

Pressure drop against catalyst bed (delta P): 6 inches of H_2O

Provide description of warning/alarm system that protects unit when operation is not meeting design conditions:

Is temperature and pressure drop of catalyst required to be monitored per 40CFR63 Subpart ZZZZ?
☐ Yes ☒ No

How often is catalyst recommended or required to be replaced (hours of operation)?
5000 hours

How often is performance test required?
☐ Initial
☐ Annual
☐ Every 8,760 hours of operation
☐ Field Testing Required
☒ No performance test required. If so, why (please list any maintenance required and the applicable sections in NSPS/GACT, Per 40 CFR §60.4243(a)(1), EQT must maintain the certified engine and control device according to the manufacturer's emission related written instructions and keep records of conducted maintenance to demonstrate compliance, but no performance testing is required.

Installation Drawings

Front End View

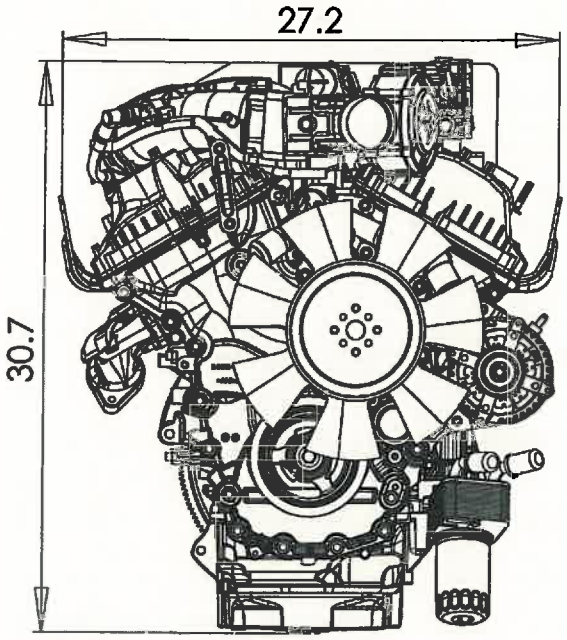

Left Side View

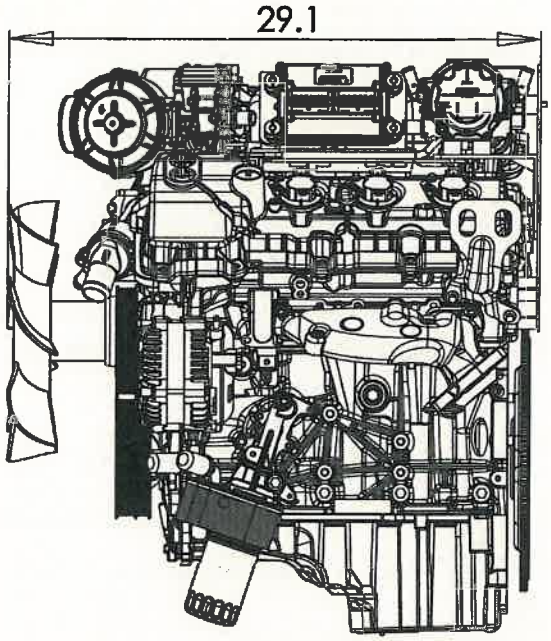

Power Curves (corrected per SAE J1349)

Gasoline

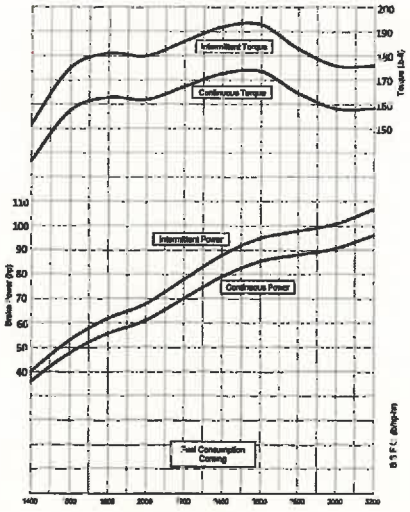

Natural Gas

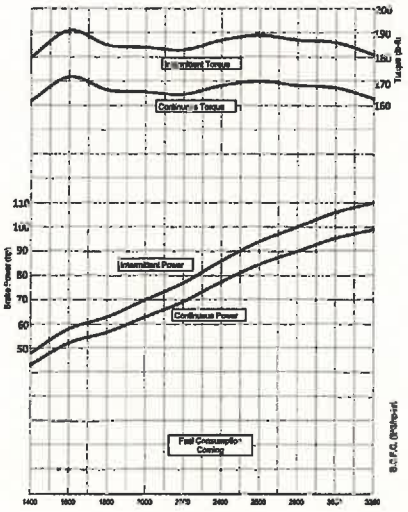

Liquefied Petroleum Gas

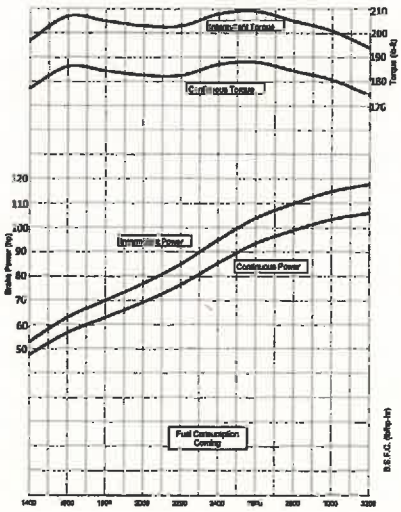

Ford Power Products

Powertrain Assemblies & Components Provided By Ford Component Sales

For additional information Contact:

ENGINE DISTRIBUTORS INC.
400 University Ct • Blackwood NJ 08012
856/228-7298 • Fax:856/228-5531
www.edi-dist.com

EDI 1040060

CSG-637 EFI

3.7 Liter 6-Cylinder

Options

Engine Cooling Fans
- 14" (355mm) diameter suction
- 14" (355mm) diameter pusher

Flywheels
- 11.5" (292mm) SAE over-center clutch
- flat face flywheel

Flywheel Housings
- SAE #3

Exhaust Manifold
- rear dump down

Power Steering Pump
Air Conditioning
Wiring Harnesses
Discrete Speed Switch
Variable Speed Hand Throttle
Variable Speed Foot Pedal
Engine Mounts
- Automotive with insulators
- Open power unit

Electronic Instrument Panel, Gauges
Three Way Catalyst / Muffler Standard

Transmissions

6R80 electronic shift

Emissions Information

California Air Resources Board (CARB)
Environmental Protection Agency (EPA)
Emission Certified Packages

Warranty

Contact Engine Distributors, Inc for warranty details.

Ford Power Products

Powertrain Assemblies & Components Provided By Ford Component Sales

Specifications

Engine Type	V-6
Bore and Stroke	3.7"x 3.4" (94mm x 86mm)
Displacement	3.7L Liter (225.7 CID)
Compression Ratio	10.5:1
Oil Capacity	6 qts. including filter
Net Weight	355 Lbs. with accessories (161 Kgs.)
Dimensions	L 25.4" x W 29.5" x H 29.4" (646 mm x 751 mm x 748 mm)

Gasoline (corrected per SAE J1349)

Unleaded 87 or 89 octane

Intermittent Power	107 [HP] @ 3200rpm	(80 [kW] @ 3200rpm)
Continuous Power	96 [HP] @ 3200rpm	(72 [kW] @ 3200rpm)
Intermittent Torque	193 [ft-lbs] @ 2600rpm	(261 [N-m] @ 2600rpm)
Continuous Torque	173 [ft-lbs] @ 2600rpm	(235 [N-m] @ 3200rpm)

Natural Gas (corrected per SAE J1349)

Fuel Specification	1050 BTU/FT3	
Intermittent Power	110 [HP] @ 3200rpm	(82 [kW] @ 3200rpm)
Continuous Power	99 [HP] @ 3200rpm	(74 [kW] @ 3200rpm)
Intermittent Torque	191 [ft-lbs] @1600rpm	(259 [N-m] @ 1600rpm)
Continuous Torque	172 [ft-lbs] @1600rpm	(233 [N-m] @ 1600rpm)

Liquefied Petroleum Gas (corrected per SAE J1349)

Fuel Specification	HD-5	
Intermittent Power	118 [HP] @ 3200rpm	(88 [kW] @ 3200rpm)
Continuous Power	106 [HP] @ 3200rpm	(79 [kW] @ 3200rpm)
Intermittent Torque	209 [ft-lbs] @ 2600rpm	(284 [N-m] @ 2600rpm)
Continuous Torque	188 [ft-lbs] @ 2600rpm	(255 [N-m] @ 2600rpm)

Standard Features / Benefits

Set-for-life valvetrain

Deep skirted, ribbed cylinder block casting for rigidity

150 AMP Alternator

Aluminum cylinder block and heads.

Chain driven dual camshafts with automatic tensioning system

Structural front cover and deep sump oil pan

Alternate fuel ready valvetrain components

Individual coil on plug electronic ignition

Four main bolts with side bolts through block for strength and durability

Gasoline Sequential Port Fuel Injection

Closed loop fuel control for all fuels

Electronic engine management system with built-in engine protection against detonation, high coolant temperature, low oil pressure, over speed shutdown and starter lockout

Next generation governing – discrete speeds, variable speeds, drive by wire – using the highest quality components.

Variable CAM Timing for intake camshafts - advances or retards timing to maximize engine power and fuel efficiency

Forged steel crankshaft

	UNITED STATES ENVIRONMENTAL PROTECTION AGENCY **2015 MODEL YEAR** **CERTIFICATE OF CONFORMITY** **WITH THE CLEAN AIR ACT**	**OFFICE OF TRANSPORTATION** **AND AIR QUALITY** **ANN ARBOR, MICHIGAN 48105**

Certificate Issued To: Engine Distributors, Inc. (U.S. Manufacturer or Importer) **Certificate Number:** FEDIB03.7CSG-006	**Effective Date:** 06/08/2015 **Expiration Date:** 12/31/2015	Byron J. Bunker, Division Director Compliance Division	**Issue Date:** 06/08/2015 **Revision Date:** N/A

Manufacturer: Engine Distributors, Inc.
Engine Family: FEDIB03.7CSG
Mobile/Stationary Certification Type: Mobile and Stationary
Fuel : LPG/Propane
Gasoline (up to and including 10% Ethanol)
Natural Gas (CNG/LNG)
Emission Standards :
Mobile Part 1048
HC + NOx (g/kW-hr) : 0.8
NMHC + NOx (g/kW-hr) : 0.8
CO (g/kW-hr) : 20.6
Part 60 Subpart JJJJ Table 1
NOx (g/kW-hr) : 1.3
HC + NOx (g/kW-hr) : 0.8
CO (g/kW-hr) : 2.7
CO (g/kW-hr) : 20.6
VOC (g/kW-hr) : 0.9
Emergency Use Only : N

Pursuant to Section 213 of the Clean Air Act (42 U.S.C. section 7547) and 40 CFR Part 60, 40 CFR Part 1048, 1065, 1068, and 60 (stationary only and combined stationary and mobile) and subject to the terms and conditions prescribed in those provisions, this certificate of conformity is hereby issued with respect to the test engines which have been found to conform to applicable requirements and which represent the following nonroad engines, by engine family, more fully described in the documentation required by 40 CFR Part 60, 40 CFR Part 1048 and produced in the stated model year.

This certificate of conformity covers only those new nonroad spark-ignition engines which conform in all material respects to the design specifications that applied to those engines described in the documentation required by 40 CFR Part 60, 40 CFR Part 1048 and which are produced during the model year stated on this certificate of the said manufacturer, as defined in 40 CFR Part 60, 40 CFR Part 1048. This certificate of conformity does not cover nonroad engines imported prior to the effective date of the certificate.

It is a term of this certificate that the manufacturer shall consent to all inspections described in 40 CFR 1068.20 and authorized in a warrant or court order. Failure to comply with the requirements of such a warrant or court order may lead to revocation or suspension of this certificate for reasons specified in 40 CFR Part 60, 40 CFR Part 1048. It is also a term of this certificate that this certificate may be revoked or suspended or rendered void *ab initio* for other reasons specified in 40 CFR Part 60, 40 CFR Part 1048.

This certificate does not cover large nonroad engines sold, offered for sale, or introduced, or delivered for introduction, into commerce in the U.S. prior to the effective date of the certificate.

ATTACHMENT O

Truck Loading Data Sheet

ATTACHMENT O – TANKER TRUCK LOADING DATA SHEET

Complete this data sheet for each new or modified bulk liquid transfer area or loading rack at the facility. This is to be used for bulk liquid transfer operations to tanker trucks. Use extra pages if necessary.

Truck Loadout Collection Efficiencies

The following applicable capture efficiencies of a truck loadout are allowed:

- For tanker trucks passing the MACT level annual leak test – 99.2%
- For tanker trucks passing the NSPS level annual leak test – 98.7%
- For tanker trucks not passing one of the annual leak tests listed above – 70%

Compliance with this requirement shall be demonstrated by keeping records of the applicable MACT or NSPS Annual Leak Test certification for ***every*** truck and railcar loaded/unloaded. This requirement can be satisfied if the trucking company provided certification that its entire fleet was compliant. This certification must be submitted in writing to the Director of the DAQ. These additional requirements must be noted in the Registration Application.

Emission Unit ID#: S018	Emission Point ID#: C001-C002, E018	Year Installed/Modified: N/A
Emission Unit Description: Uncaptured losses from loading of produced fluids into tanker trucks		
Loading Area Data		
Number of Pumps: 1	Number of Liquids Loaded: 1	Max number of trucks loading at one (1) time: 1
Are tanker trucks pressure tested for leaks at this or any other location? ☐ Yes ☒ No ☐ Not Required If Yes, Please describe:		
Provide description of closed vent system and any bypasses. Trucks utilize vapor recovery lines to route displaced vapors back into battery of tanks.		
Are any of the following truck loadout systems utilized? ☐ Closed System to tanker truck passing a MACT level annual leak test? ☐ Closed System to tanker truck passing a NSPS level annual leak test? ☒ Closed System to tanker truck not passing an annual leak test and has vapor return?		

Projected Maximum Operating Schedule (for rack or transfer point as a whole)

Time	Jan – Mar	Apr - Jun	Jul – Sept	Oct - Dec
Hours/day	Varies	Varies	Varies	Varies
Days/week	7	7	7	7

Bulk Liquid Data (use extra pages as necessary)

Liquid Name	Produced Fluids		
Max. Daily Throughput (1000 gal/day)	See attached emissions calculations for all throughput values		
Max. Annual Throughput (1000 gal/yr)	See attached emissions calculations for all throughput values		
Loading Method[1]	SP		
Max. Fill Rate (gal/min)	Varies		
Average Fill Time (min/loading)	Varies		
Max. Bulk Liquid Temperature (°F)	See ProMax results		
True Vapor Pressure[2]	See ProMax results		
Cargo Vessel Condition[3]	U		
Control Equipment or Method[4]	VB, ECD (captured loading losses)		

Max. Collection Efficiency (%)		70		
Max. Control Efficiency (%)		98		
Max.VOC Emission Rate	Loading (lb/hr)	See attached emission calculations for breakdown		
	Annual (ton/yr)	See attached emission calculations for breakdown		
Max.HAP Emission Rate	Loading (lb/hr)	See attached emission calculations for breakdown		
	Annual (ton/yr)	See attached emission calculations for breakdown		
Estimation Method[5]		AP-42 Section 5.2 Methodology (via ProMax)		

1 BF Bottom Fill SP Splash Fill SUB Submerged Fill
2 At maximum bulk liquid temperature
3 B Ballasted Vessel C Cleaned U Uncleaned (dedicated service)
O Other (describe)
4 List as many as apply (complete and submit appropriate Air Pollution Control Device Sheets)
CA Carbon Adsorption VB Dedicated Vapor Balance (closed system)
ECD Enclosed Combustion Device F Flare
TO Thermal Oxidization or Incineration
5 EPA EPA Emission Factor in AP-42 MB Material Balance
TM Test Measurement based upon test data submittal O Other (describe)

ATTACHMENT P

Glycol Dehydrator Data Sheet *(Not Applicable)*

ATTACHMENT P – GLYCOL DEHYDRATION UNIT DATA SHEET – NOT APPLICABLE

Complete this data sheet for each Glycol Dehydration Unit, Reboiler, Flash Tank and/or Regenerator at the facility. Include gas sample analysis and GRI- GLYCalc™ input and aggregate report. Use extra pages if necessary.

Manufacturer:	Model:
Max. Dry Gas Flow Rate:	Reboiler Design Heat Input
Design Type: ☐ TEG ☐ DEG ☐ EG	Source Status[1]:
Date Installed/Modified/Removed[2]:	Regenerator Still Vent APCD/ERD[3]:
Control Device/ERD ID#[3]:	Fuel HV (BTU/scf):
H_2S Content (gr/100 scf):	Operation (hours/year):
Pump Rate (gpm):	
Water Content (wt %) in: Wet Gas: Dry Gas:	

Is the glycol dehydration unit exempt from 40CFR63 Section 764(d)? ☐ Yes ☐ No: If Yes, answer the following:

The actual annual average flowrate of natural gas to the glycol dehydration unit is less than 85 thousand standard cubic meters per day, as determined by the procedures specified in §63.772(b)(1) of this subpart. ☐ Yes ☐ No

The actual average emissions of benzene from the glycol dehydration unit process vent to the atmosphere are less than 0.90 megagram per year (1 ton per year), as determined by the procedures specified in §63.772(b)(2) of this subpart. ☐ Yes ☐ No

Is the glycol dehydration unit located within an Urbanized Area (UA) or Urban Cluster (UC)? ☐ Yes ☐ No

Is a lean glycol pump optimization plan being utilized? ☐ Yes ☐ No

Recycling the glycol dehydration unit back to the flame zone of the reboiler.
☐ Yes ☐ No

Recycling the glycol dehydration unit back to the flame zone of the reboiler and mixed with fuel.
☐ Yes ☐ No

What happens when temperature controller shuts off fuel to the reboiler?
☐ Still vent emissions to the atmosphere.
☐ Still vent emissions stopped with valve.
☐ Still vent emissions to glow plug.
☐ None of the above: Still vent emissions are controlled by an enclosed combustor

Please indicate if the following equipment is present.
☐ Flash Tank
☐ Burner management system that continuously burns condenser or flash tank vapors

Control Device Technical Data

Pollutants Controlled	Manufacturer's Guaranteed Control Efficiency (%)

Emissions Data

Emission Unit ID / Emission Point ID[4]	Description	Calculation Methodology[5]	PTE[6]	Controlled Maximum Hourly Emissions (lb/hr)	Controlled Maximum Annual Emissions (tpy)

1 Enter the Source Status using the following codes:

NS	Construction of New Source	ES	Existing Source
MS	Modification of Existing Source		

2 Enter the date (or anticipated date) of the glycol dehydration unit's installation (construction of source), modification or removal.

3 Enter the Air Pollution Control Device (APCD)/Emission Reduction Device (ERD) type designation using the following codes and the device ID number:

NA	None	CD	Condenser	FL	Flare	
CC	Condenser/Combustion Combination	TO	Thermal Oxidizer	O	Other	(please list)

4 Enter the appropriate Emission Unit ID Numbers and Emission Point ID Numbers for the glycol dehydration unit reboiler vent and glycol regenerator still vent. The glycol dehydration unit reboiler vent and glycol regenerator still vent should be designated RBV-1 and RSV-1, respectively. If the compressor station incorporates multiple glycol dehydration units, a Glycol Dehydration Emission Unit Data Sheet shall be completed for each, using Source Identification RBV-2 and RSV-2, RBV-3 and RSV-3, etc.

5 Enter the Potential Emissions Data Reference designation using the following codes:

MD	Manufacturer's Data	AP	AP-42	
GR	GRI-GLYCalc™	OT	Other	(please list)

6 Enter the Reboiler Vent and Glycol Regenerator Still Vent Potential to Emit (PTE) for the listed regulated pollutants in lbs per hour and tons per year. The Glycol Regenerator Still Vent potential emissions may be determined using the most recent version of the thermodynamic software model GRI-GLYCalc™ (Radian International LLC & Gas Research Institute). **Attach all referenced Potential Emissions Data (or calculations) and the GRI-GLYCalc™ Aggregate Calculations Report (shall include emissions reports, equipment reports, and stream reports) to this Glycol Dehydration Emission Unit Data Sheet(s). Backup pumps do not have to be considered as operating for purposes of PTE.** This PTE data shall be incorporated in the Emissions Summary Sheet.

ATTACHMENT Q

Pneumatic Controller Data Sheet *(Not Applicable)*

ATTACHMENT Q – PNEUMATIC CONTROLLERS DATA SHEET
Are there any continuous bleed natural gas driven pneumatic controllers at this facility that commenced construction, modification or reconstruction after August 23, 2011? ☐ Yes ☒ No Please list approximate number.
Are there any continuous bleed natural gas driven pneumatic controllers at this facility with a bleed rate greater than 6 standard cubic feet per hour that are required based on functional needs, including but not limited to response time, safety and positive actuation that commenced construction, modification or reconstruction after August 23, 2011? ☐ Yes ☒ No Please list approximate number.

ATTACHMENT R

Air Pollution Control Device Data Sheet

ATTACHMENT R – AIR POLLUTION CONTROL DEVICE / EMISSION REDUCTION DEVICE SHEETS

Complete the applicable air pollution control device sheets for each flare, vapor combustor, thermal oxidizer, condenser, adsorption system, vapor recovery unit, BTEX Eliminator, Reboiler with and without Glow Plug, etc. at the facility. Use extra pages if necessary.

Emissions calculations must be performed using the most conservative control device efficiency.

The following five (5) rows are only to be completed if registering an alternative air pollution control device.

Emission Unit ID: **Not Applicable**	Make/Model:
Primary Control Device ID:	Make/Model:
Control Efficiency (%):	APCD/ERD Data Sheet Completed: ☐ Yes ☐ No
Secondary Control Device ID:	Make/Model:
Control Efficiency (%):	APCD/ERD Data Sheet Completed: ☐ Yes ☐ No

VAPOR COMBUSTION
(Including Enclosed Combustors)

General Information

Control Device ID#: **C001 (existing; no change)**	Installation Date: 2013 ☐ New ☐ Modified ☐ Relocated

Maximum Rated Total Flow Capacity ~7,850 scfh 188,000 scfd	Maximum Design Heat Input (from mfg. spec sheet) 11.66 MMBTU/hr	Design Heat Content 1,500 BTU/scf

Control Device Information

Type of Vapor Combustion Control?

☒ Enclosed Combustion Device ☐ Elevated Flare ☐ Ground Flare
☐ Thermal Oxidizer

Manufacturer: LEED Fabrication Model: Enclosed Combustor 48"	Hours of operation per year? 8,760

List the emission units whose emissions are controlled by this vapor control device (Emission Point ID# S001-S006, S018)

Emission Unit ID#	Emission Source Description	Emission Unit ID#	Emission Source Description
S001-S006	Produced Fluid Tanks		
S018	Liquid Loading		

If this vapor combustor controls emissions from more than six (6) emission units, please attach additional pages.

Assist Type (Flares only)	Flare Height	Tip Diameter	Was the design per §60.18?
☐ Steam ☐ Air ☐ Pressure ☒ Non	~25 feet	4 feet	☐ Yes ☐ No ☒ N/A Provide determination.

Waste Gas Information

Maximum Waste Gas Flow Rate 130 (scfm)	Heat Value of Waste Gas Stream Varies BTU/ft^3	Exit Velocity of the Emissions Stream Varies (ft/s)

Provide an attachment with the characteristics of the waste gas stream to be burned.

Pilot Gas Information

Number of Pilot Lights	Fuel Flow Rate to Pilot Flame per Pilot	Heat Input per Pilot	Will automatic re-ignition be used?
1	~50 scfh	0.05 MMBTU/hr	☐ Yes ☒ No

If automatic re-ignition is used, please describe the method.

Is pilot flame equipped with a monitor to detect the presence of the flame? ☒ Yes ☐ No	If Yes, what type? ☒ Thermocouple ☐ Infrared ☐ Ultraviolet ☐ Camera ☐ Other:

Describe all operating ranges and maintenance procedures required by the manufacturer to maintain the warranty. *(If unavailable, please indicate).* See attached information on unit

Additional information attached? ☒ Yes ☐ No
Please attach copies of manufacturer's data sheets, drawings, flame demonstration per §60.18 or §63.11(b) and performance testing.

VAPOR COMBUSTION
(Including Enclosed Combustors)

General Information

Control Device ID#: **C002 (new)**	Installation Date: TBD ☒ New ☐ Modified ☐ Relocated
Maximum Rated Total Flow Capacity ~7,850 scfh 188,000 scfd	Maximum Design Heat Input (from mfg. spec sheet) 11.66 MMBTU/hr Design Heat Content 1, 500 BTU/scf

Control Device Information

Type of Vapor Combustion Control?

☒ Enclosed Combustion Device ☐ Elevated Flare ☐ Ground Flare
☐ Thermal Oxidizer

Manufacturer: LEED Fabrication Model: Enclosed Combustor 48"	Hours of operation per year? 8,760

List the emission units whose emissions are controlled by this vapor control device (Emission Point ID# S001-S006, S018)

Emission Unit ID#	Emission Source Description	Emission Unit ID#	Emission Source Description
S001-S006	Produced Fluid Tanks		
S018	Liquid Loading		

If this vapor combustor controls emissions from more than six (6) emission units, please attach additional pages.

Assist Type (Flares only)	Flare Height	Tip Diameter	Was the design per §60.18?
☐ Steam ☐ Air ☐ Pressure ☒ Non	~25 feet	4 feet	☐ Yes ☐ No ☒ N/A Provide determination.

Waste Gas Information

Maximum Waste Gas Flow Rate 130 (scfm)	Heat Value of Waste Gas Stream Varies BTU/ft^3	Exit Velocity of the Emissions Stream Varies (ft/s)

Provide an attachment with the characteristics of the waste gas stream to be burned.

Pilot Gas Information

Number of Pilot Lights	Fuel Flow Rate to Pilot Flame per Pilot	Heat Input per Pilot	Will automatic re-ignition be used?
1	~50 scfh	0.05 MMBTU/hr	☐ Yes ☒ No

If automatic re-ignition is used, please describe the method.

Is pilot flame equipped with a monitor to detect the presence of the flame? ☒ Yes ☐ No	If Yes, what type? ☒ Thermocouple ☐ Infrared ☐ Ultraviolet ☐ Camera ☐ Other:

Describe all operating ranges and maintenance procedures required by the manufacturer to maintain the warranty. *(If unavailable, please indicate).* See attached information on unit

Additional information attached? ☒ Yes ☐ No
Please attach copies of manufacturer's data sheets, drawings, flame demonstration per §60.18 or §63.11(b) and performance testing.

CONDENSER – Not Applicable		
General Information		
Control Device ID#:	Installation Date: ☐ New ☐ Modified ☐ Relocated	
Manufacturer:	Model:	Control Device Name:
Control Efficiency (%):		
Manufacturer's required temperature range for control efficiency. °F		
Describe the warning and/or alarm system that protects against operation when unit is not meeting the design requirements:		
Describe all operating ranges and maintenance procedures required by the manufacturer to maintain the warranty.		
Additional information attached? ☐ Yes ☐ No Please attach copies of manufacturer's data sheets.		
Is condenser routed to a secondary APCD or ERD? ☐ Yes ☐ No		

ADSORPTION SYSTEM – Not Applicable

General Information		
Control Device ID#:	Installation Date: ☐ New ☐ Modified ☐ Relocated	
Manufacturer:	Model:	Control Device Name:
Design Inlet Volume: scfm	Adsorbent charge per adsorber vessel and number of adsorber vessels:	
Length of Mass Transfer Zone supplied by the manufacturer:	Adsorber diameter: ft Adsorber area: ft^2	
Adsorbent type and physical properties:	Overall Control Efficiency (%):	
Working Capacity of Adsorbent (%):		

Operating Parameters	
Inlet volume: scfm @ °F	
Adsorption time per adsorption bed (life expectancy):	Breakthrough Capacity (lbs of VOC/100 lbs of adsorbent):
Temperature range of carbon bed adsorber. °F - °F	

Control Device Technical Data	
Pollutants Controlled	Manufacturer's Guaranteed Control Efficiency (%)

Describe the warning and/or alarm system that protects against operation when unit is not meeting the design requirements:
Has the control device been tested by the manufacturer and certified?
Describe all operating ranges and maintenance procedures required by the manufacturer to maintain the warranty.
Additional information attached? ☐ Yes ☐ No Please attach copies of manufacturer's data sheets, drawings, and performance testing.

VAPOR RECOVERY UNIT

General Information

Emission Unit ID#: S017	Installation Date: TBD ☒ New ☐ Modified ☐ Relocated

Device Information

Manufacturer: Ford
Model: CSG-637

List the emission units whose emissions are controlled by this vapor recovery unit (Emission Point ID# NA)

Emission Unit ID#	Emission Source Description	Emission Unit ID#	Emission Source Description
NA	Low Pressure Separator		

If this vapor recovery unit controls emissions from more than six (6) emission units, please attach additional pages.

Additional information attached? ☒ Yes ☐ No
Please attach copies of manufacturer's data sheets, drawings, and performance testing.

The registrant may claim a capture and control efficiency of 95 % (which accounts for 5% downtime) for the vapor recovery unit.

The registrant may claim a capture and control efficiency of 98% if the VRU has a backup flare that meet the requirements of Section 8.1.2 of this general permit.

The registrant may claim a capture and control efficiency of 98% if the VRU has a backup VRU.

LEED FABRICATION	Item/Tag No.:		Page	1 of 2	
	Project No.:		Revision:	B	
	Project:		Date:	27 February 2014	
Enviromental Control Equipment Data Sheet	P.O. No.:	-	By:	JS	
	RFQ No.:	-	Checked:	SG	
	Ref. P&ID:	-	Approved:	MS	
	Remarks:	-	Supplier:	LEED FABRICATION	
			Model No.:	L30-0011-00	

Client:				
Site:				
Unit/Lease:				

GENERAL

1	Design Code:	NDE:	LEED Fabrication Standards
2	Service:	Customer Specs:	☐ Yes
3	Description: Standard Dual Stage 48 High Efficiency Combustor		☑ No

PROCESS DATA

	Gas Composition:	mol %
4	Methane	
5	Ethane	
6	Propane	
7	I-Butane	
8	n-Butane	
9	I-Pentane	
10	n-Pentane	
11	n-Hexane	
12	CO2	
13	N2	
14	Helium	
15	H_2O	
16	C7	
17	C8	
18	C9	
19	C10	
20	C11+	
21	TOTAL	

Process Conditions:		
Variable	Value	Units
Flow Rate	Up to 140	Mscfd
Pressure	Up to 12	oz/in2
Temperature		°F
Molecular Weight		
Process/Waste Stream	☑ Gas	☐ Liquid

Detailed Process Description / Process Notes:

1. Turndown 10:1. Based on an expected normal operating rate indicated above.
2. DRE: 98 % operating at design conditions
3. Burner Pressure Drop: Min. 0.10 oz/in2

	Other Components:	PPMV
22	H2S	
23	Benzene	
24	Toluene	
25	E-Benzene	
26	Xylene	

Available Utilities:	
Fuel / Pilot Gas	Min. 30psig Natural Gas /Propane 40-50 SCFH
Instrument Air	NA
Power	120 V / 60 Hz or Solar Power
Steam	NA
Purge Gas	

DESIGN DATA

27	Ambient Temperatures:		Noise Performance Requirements:	Under 85 dBA
28	Low, °F	-20	Structural Design Code:	
29	High, °F	120	Wind Design Code:	ASCE
30	Design Conditions: Pressure/Temperature			
31	Max. Relative Humidity, %	90	Pressure/Speed	100 mph
32	Elevation (ASL), ft		Category	
33	Area Classification:	Class I Div 2	Seismic Design Code:	
34	Electrical Design Code:	NEC	Location	

EQUIPMENT SPECIFICATION

35	Type:	☐ Elevated	☑ Enclosed	
36		☐ Above Ground		
37		☑ Stack	☐ Multiple Stack	
38		☐ Portable / Trailer		
39				
40	Smokeless By:	☐ Steam	☐ Assist Air	
41		☐ Gas Assist	☑ Staging	
42				
43	Stack:	☑ Self Supporting		
44	Flare Burner:	☐ Non-Smokeless	☑ Smokeless	☐ Gas Assist
45	Pilot:	☑ Intermittent	☐ Continuous	
46	Pilot Air Inspirator:	☑ Local	☐ Remote	
47	Pilot Flame Control:	☐ No	☑ Yes (Thermocouple)	
48				
49	Pilot Ignition:	☐ Flamefront Generator	☑ Inspirating Ignitor	
50		☐ Electronic	☑ Automatic	☐ Manual
51		☐ With Pilot Flame Control		
52		☐ With Auto Pilot Re-Ignition		
53				
54	Pilot Ignition Backup:	☐ Manual	Specify: i.e Piezo-Electric	
55		☐ Battery Pack		

Equipment Design:	
Component	Material / Size / Rating / Other
Burner	
Burner Tip / Assist Gas Burner	304 SS
Burner Body	Carbon Steel
Pilot	
Pilot Tip	304 SS
Pilot Line(s)	Carbon Steel
Firebox / Stack	
Shell	Carbon Steel
Piping	Carbon Steel
Nozzles	Carbon Steel
Flanges	Carbon Steel
Insulation	Blanket
Insulation Pins	304 SS
Refractory	NA
Refractory Anchors	NA
Ladders and Platforms	NA
Stack Sample Connections	Per EPA requirements
Sight Glass	2
Other	

Environmental Control Equipment Data Sheet	Item/Tag No.:		Page	2 of 3	
	Project No.:		Revision:	B	
	Project:		Date:	27 February 2014	
			By:	JS	
	P.O. No.:	-	Checked:	SG	
	RFQ No.:	-	Approved:	MS	
Client:	Ref. P&ID:	-			
Site:			Supplier:	LEED FABRICATION	
Unit/Lease:	Remarks:	-	Model No.:	L30-0011-00	

EQUIPMENT SPECIFICATION

56	Flame Detection:	☐ Thermocouple ☑ Ionization Rod	Auxiliary Equipment	
57		☐ UV Scanner	Valves	NA
58	General Configuration:		Blowers	NA
59			Dampers	NA
60			Inlet KO / Liquid Seal	NA
61			Flame / Detonation Arrestor	Yes
62			Instrumentation & Controls	
63			Solenoids / Shut-Off Valves	Check with Sales for available config.
64			Flow Meters	NA
65			Calorimeter	NA
66			Pressure Switches/Transmitters	NA
67			Thermocouples	Check with Sales for available config.
68			Temperature Switches/Transmitters	NA
69			BMS	Check with Sales for available config.
70			CEMS	NA
71			Other	NA
72				
73				
74				
75				

FABRICATION AND INSPECTION

76	Special requirements	☐ Skid Mounted ☑ Concrete Pad	Equipment Info	
77		☐ Other	Component	Weight / Dimensions
78			Burner	
79	Inspection	☑ Vendor Standard	Burner Assembly	
80		☐ Other. Specify:	Stack	
81	Material Certification	☑ Vendor Standard	Stack Assembly	48 " OD x 25 ' H
82		☐ MTR	Pilot Tip	
83		☐ Certificate of Compliance	Pilot Line(s)	
84		☐ Other (Specify):	Stack Assembly	
85	NDE	☑ Vendor Standard	Auxiliary Equipment	
86		☐ Radiography. Specify:	Blowers	
87		☐ Ultrasonic. Specify:	Inlet KO / Liquid Seal	
88		☐ Liquid Penetrant.	Flame / Detonation Arrestor	
89		☐ Magnetic Particles.	Skid	
90		☐ PMI. Specify:	Instrumentation & Controls	
91		☐ Other. Specify:	BMS	
92	Surface Preparation	☑ Vendor Standard	Control Panel	
93		☐ Other. Specify:		
94	Paint System	☑ Vendor Standard		
95		☐ Other. Specify:		
96	Finished Color	☑ Vendor Standard		
97		☐ Other. Specify:		
98				
99				

Additional Notes:

Environmental Control Equipment **Data Sheet**		Item/Tag No.:		Page	3	of	3
		Project No.:		Revision:	B		
		Project:		Date:	27 February 2014		
				By:	JS		
		P.O. No.:	-	Checked:	SG		
		RFQ No.:	-	Approved:	MS		
Client:		Ref. P&ID:	-				
Site:				Supplier:	LEED FABRICATION		
Unit/Lease:		Remarks:	-	Model No.:	L30-0011-00		

GENERAL ARRANGEMENT

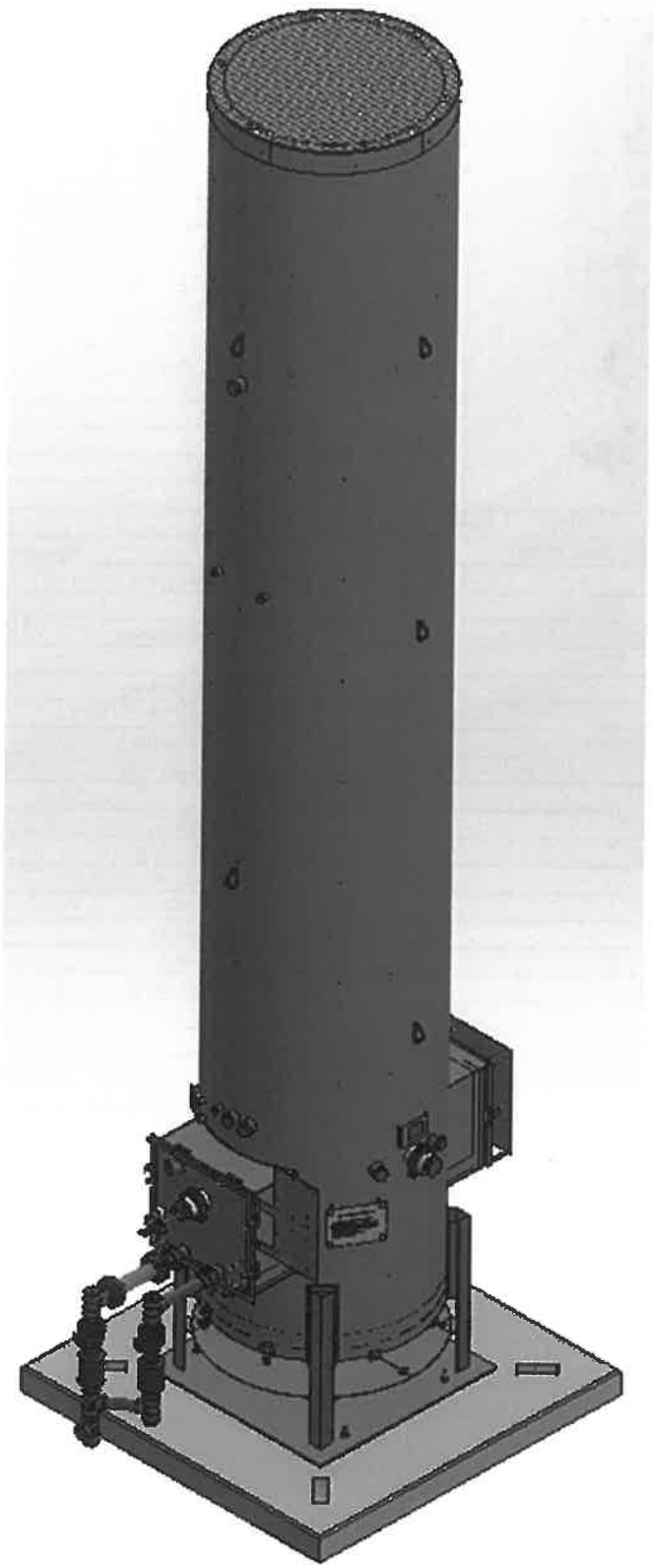

§ MMBTU/hr values are calculated based on 1500 BTU/scf gas

Flare Size	# of Orifices (N)	Pressure (OZ/in^2)	m^3/s	mSCFD	MMBTU/hr
18	2	1	0.0021	6.34	0.39
18	2	2	0.0029	8.97	0.56
18	2	3	0.0036	10.99	0.68
18	2	4	0.0042	12.69	0.78
18	2	5	0.0046	14.18	0.88
18	2	6	0.0051	15.54	0.96
18	2	7	0.0055	16.78	1.04
18	2	8	0.0059	17.94	1.11
18	2	9	0.0062	19.03	1.18
18	2	10	0.0066	20.06	1.24
18	2	11	0.0069	21.04	1.30
18	2	12	0.0072	21.97	1.36
18	2	13	0.0075	22.87	1.42
18	2	14	0.0078	23.73	1.47
18	2	15	0.0081	24.57	1.52
18	2	16	0.0083	25.37	1.57
18	2	17	0.0086	26.15	1.62
18	2	18	0.0088	26.91	1.67
24	4	1	0.0042	12.69	0.78
24	4	2	0.0059	17.94	1.11
24	4	3	0.0072	21.97	1.36
24	4	4	0.0083	25.37	1.57
24	4	5	0.0093	28.37	1.76
24	4	6	0.0102	31.08	1.92
24	4	7	0.0110	33.56	2.08
24	4	8	0.0118	35.88	2.22
24	4	9	0.0125	38.06	2.35
24	4	10	0.0131	40.12	2.48
24	4	11	0.0138	42.08	2.60
24	4	12	0.0144	43.95	2.72
24	4	13	0.0150	45.74	2.83
24	4	14	0.0156	47.47	2.94
24	4	15	0.0161	49.13	3.04
24	4	16	0.0166	50.75	3.14
24	4	17	0.0171	52.31	3.24
24	4	18	0.0176	53.82	3.33
36	10	1	0.0104	31.72	1.96
36	10	2	0.0147	44.85	2.78
36	10	3	0.0180	54.93	3.40

36	10	4	0.0208	63.43	3.92
36	10	5	0.0232	70.92	4.39
36	10	6	0.0255	77.69	4.81
36	10	7	0.0275	83.91	5.19
36	10	8	0.0294	89.71	5.55
36	10	9	0.0312	95.15	5.89
36	10	10	0.0329	100.29	6.21
36	10	11	0.0345	105.19	6.51
36	10	12	0.0360	109.87	6.80
36	10	13	0.0375	114.35	7.08
36	10	14	0.0389	118.67	7.34
36	10	15	0.0403	122.83	7.60
36	10	16	0.0416	126.86	7.85
36	10	17	0.0429	130.77	8.09
36	10	18	0.0441	134.56	8.33
48	14	1	0.0146	44.40	2.75
48	14	2	0.0206	62.79	3.89
48	14	3	0.0252	76.91	4.76
48	14	4	0.0291	88.80	5.49
48	14	5	0.0325	99.29	6.14
48	14	6	0.0356	108.76	6.73
48	14	7	0.0385	117.48	7.27
48	14	8	0.0412	125.59	7.77
48	14	9	0.0437	133.21	8.24
48	14	10	0.0460	140.41	8.69
48	14	11	0.0483	147.27	9.11
48	14	12	0.0504	153.81	9.52
48	14	13	0.0525	160.09	9.91
48	14	14	0.0545	166.14	10.28
48	14	15	0.0564	171.97	10.64
48	14	16	0.0582	177.61	10.99
48	14	17	0.0600	183.07	11.33
48	14	18	0.0617	188.38	11.66

ATTACHMENT S

Emission Calculations

Company Name: EOT Production, LLC
Facility Name: QXF156 Wellpad
Project Description: G70-B Application

Facility-Wide Emission Summary - Controlled

Wells	6	per pad
Storage Tanks	6	per pad
Sand Separator Tank	1	per pad
Line Heaters	7	per pad
TEGs	0	per pad
Dehy Reboiler	0	per pad
Glycol Dehy	0	per pad
Dehy Drip Tank	0	per pad
Dehy Combustor	0	per pad
Compressor	1	per pad
High Pressure Separator	6	per pad
Low Pressure Separator	1	per pad
Vapor Recovery Unit	1	per pad
Tank Combustor	2	per pad
Length of lease road	3,400	feet

Carbon equivalent emissions (CO_2e) are based on the following Global Warming Potentials (GWP) from 40 CFR Part 98, Table A-1:

CO_2	1
CH_4	25
N_2O	298

Emission Point ID #	Emission Source ID#s	Emission Source Description	NO_x		CO		VOC		SO_2		PM_{10}		$PM_{2.5}$		CO_2e	
			lb/hr	tpy	lb/hr	tpy	lb/hr	tpy	lb/hr	tpy	lb/hr	tpy	lb/hr	tpy	lb/hr	tpy
C001-C002	S001-S006	Storage Vessels	---	---	---	---	0.31	1.36	---	---	---	---	---	---	4.73	20.71
C001-C002	S018	Captured Liquid Loading	---	---	---	---	2.25	0.58	---	---	---	---	---	---	---	---
C001	C001	Tank Combustor	1.15	5.03	0.96	4.22	2.8E-04	1.2E-03	0.01	0.03	0.09	0.38	0.09	0.38	1,371.10	6,005.43
C002	C002	Tank Combustor	1.15	5.03	0.96	4.22	2.8E-04	1.2E-03	0.01	0.03	0.09	0.38	0.09	0.38	1,371.10	6,005.43
C001	**S001-S006, S018, C001**	---	**1.15**	**5.03**	**0.96**	**4.22**	**1.28**	**0.97**	**0.01**	**0.03**	**0.09**	**0.38**	**0.09**	**0.38**	**1,373.47**	**6,015.79**
C002	**S001-S006, S018, C002**	---	**1.15**	**5.03**	**0.96**	**4.22**	**1.28**	**0.97**	**0.01**	**0.03**	**0.09**	**0.38**	**0.09**	**0.38**	**1,373.47**	**6,015.79**
E007	S007	Line Heater	0.15	0.64	0.12	0.54	0.01	0.04	8.8E-04	3.9E-03	0.01	0.05	0.01	0.05	180.18	789.20
E008	S008	Line Heater	0.15	0.64	0.12	0.54	0.01	0.04	8.8E-04	3.9E-03	0.01	0.05	0.01	0.05	180.18	789.20
E009	S009	Line Heater	0.15	0.64	0.12	0.54	0.01	0.04	8.8E-04	3.9E-03	0.01	0.05	0.01	0.05	180.18	789.20
E010	S010	Line Heater	0.15	0.64	0.12	0.54	0.01	0.04	8.8E-04	3.9E-03	0.01	0.05	0.01	0.05	180.18	789.20
E011	S011	Line Heater	0.15	0.64	0.12	0.54	0.01	0.04	8.8E-04	3.9E-03	0.01	0.05	0.01	0.05	180.18	789.20
E012	S012	Line Heater	0.15	0.64	0.12	0.54	0.01	0.04	8.8E-04	3.9E-03	0.01	0.05	0.01	0.05	180.18	789.20
E015	S015	Line Heater	0.11	0.48	0.09	0.40	0.01	0.03	6.6E-04	2.9E-03	0.01	0.04	0.01	0.04	135.14	591.90
E013	S013	TEG	1.2E-03	5.4E-03	1.0E-03	4.5E-03	6.8E-05	3.0E-04	7.4E-06	3.2E-05	9.4E-05	4.1E-04	9.4E-05	4.1E-04	1.52	6.64
E014	S014	TEG	1.2E-03	5.4E-03	1.0E-03	4.5E-03	6.8E-05	3.0E-04	7.4E-06	3.2E-05	9.4E-05	4.1E-04	9.4E-05	4.1E-04	1.52	6.64
E016	S016	Sand Separator Tank	---	---	---	---	0.09	0.39	---	---	---	---	---	---	0.53	2.35
E017	S017	VRU Engine	0.24	1.06	0.49	2.12	0.19	0.81	4.5E-04	2.0E-03	0.01	0.07	0.01	0.07	90.18	394.99
E018	S018	Uncaptured Liquid Loading	---	---	---	---	48.20	12.53	---	---	---	---	---	---	---	---
---	---	Fugitives	---	---	---	---	---	22.99	---	---	---	---	---	---	---	727.51
---	---	Haul Roads	---	---	---	---	---	---	---	---	---	4.22	---	0.42	---	---
Facility Total			3.53	15.46	3.25	14.22	51.09	38.91	0.02	0.09	0.26	5.37	0.26	1.58	4,056.90	18,496.79
Facility Total (excluding fugitive emissions)			3.53	15.46	3.25	14.22	2.89	3.38	0.02	0.09	0.26	1.16	0.26	1.16	4,056.90	17,769.28

1. Emissions routed to combustors are divided evenly by the total number of combustors (i.e., Combustor Point Emissions = [storage tanks emissions + captured loading emissions] / [number of combustors] + combustor emissions). However, emissions can be routed to either combustor.

Company Name: EOT Production, LLC
Facility Name: OXF156 Wellpad
Project Description: G70-B Application

Facility-Wide Emission Summary - Controlled

Emission Point ID #	Emission Source ID#s	Emission Source Description	Formaldehyde		Benzene		Toluene		Ethylbenzene		Xylenes		n-Hexane		Total HAP	
			lb/hr	tpy	lb/hr	tpy	lb/hr	tpy	lb/hr	tpy	lb/hr	tpy	lb/hr	tpy	lb/hr	tpy
C001-C002	S001-S006	Storage Vessels	---	---	2.2E-04	9.9E-04	6.7E-04	2.9E-03	5.1E-05	2.2E-04	1.9E-04	8.3E-04	0.01	0.02	0.01	0.03
C001-C002	S018	Captured Liquid Loading	---	---	1.1E-03	2.9E-04	2.1E-03	5.4E-04	1.5E-04	3.9E-05	5.3E-04	1.4E-04	0.04	0.01	0.04	0.01
C001	C001	Tank Combustor	---	---	---	---	---	---	---	---	---	---	---	---	---	---
C002	C002	Tank Combustor	---	---	---	---	---	---	---	---	---	---	---	---	---	---
C001	**S001-S006, S018, C001**	---	---	---	**6.8E-04**	**6.4E-04**	**1.4E-03**	**1.7E-03**	**1.0E-04**	**1.3E-04**	**3.6E-04**	**4.8E-04**	**0.02**	**0.02**	**0.02**	**0.02**
C002	**S001-S006, S018, C002**	---	---	---	**6.8E-04**	**6.4E-04**	**1.4E-03**	**1.7E-03**	**1.0E-04**	**1.3E-04**	**3.6E-04**	**4.8E-04**	**0.02**	**0.02**	**0.02**	**0.02**
E007	S007	Line Heater	1.1E-04	4.8E-04	3.1E-06	1.3E-05	5.0E-06	2.2E-05	---	---	---	---	2.6E-03	0.01	2.8E-03	0.01
E008	S008	Line Heater	1.1E-04	4.8E-04	3.1E-06	1.3E-05	5.0E-06	2.2E-05	---	---	---	---	2.6E-03	0.01	2.8E-03	0.01
E009	S009	Line Heater	1.1E-04	4.8E-04	3.1E-06	1.3E-05	5.0E-06	2.2E-05	---	---	---	---	2.6E-03	0.01	2.8E-03	0.01
E010	S010	Line Heater	1.1E-04	4.8E-04	3.1E-06	1.3E-05	5.0E-06	2.2E-05	---	---	---	---	2.6E-03	0.01	2.8E-03	0.01
E011	S011	Line Heater	1.1E-04	4.8E-04	3.1E-06	1.3E-05	5.0E-06	2.2E-05	---	---	---	---	2.6E-03	0.01	2.8E-03	0.01
E012	S012	Line Heater	1.1E-04	4.8E-04	3.1E-06	1.3E-05	5.0E-06	2.2E-05	---	---	---	---	2.6E-03	0.01	2.8E-03	0.01
E015	S015	Line Heater	8.2E-05	3.6E-04	2.3E-06	1.0E-05	3.7E-06	1.6E-05	---	---	---	---	2.0E-03	0.01	2.1E-03	0.01
E013	S013	TEG	9.3E-07	4.1E-06	2.6E-08	1.1E-07	4.2E-08	1.8E-07	---	---	---	---	2.2E-05	9.7E-05	2.3E-05	1.0E-04
E014	S014	TEG	9.3E-07	4.1E-06	2.6E-08	1.1E-07	4.2E-08	1.8E-07	---	---	---	---	2.2E-05	9.7E-05	2.3E-05	1.0E-04
E016	S016	Sand Separator Tank	---	---	<0.01	<0.01	<0.01	<0.01	<0.01	<0.01	<0.01	<0.01	1.0E-03	<0.01	2.0E-03	1.0E-02
E017	S017	VRU Engine	0.02	0.07	1.2E-03	5.3E-03	4.3E-04	1.9E-03	1.9E-05	8.4E-05	1.5E-04	6.6E-04	---	---	0.02	0.11
E018	S018	Uncaptured Liquid Loading	---	---	0.02	0.01	0.04	0.01	3.2E-03	8.4E-04	0.01	3.0E-03	0.79	0.21	0.88	0.23
---	---	Fugitives	---	---	---	0.01	---	0.03	---	6.8E-03	---	0.05	---	0.23	---	0.88
---	---	Haul Roads	---	---	---	---	---	---	---	---	---	---	---	---	---	---
Facility Total			0.02	0.07	0.03	0.02	0.05	0.04	3.4E-03	0.01	0.01	0.06	0.85	0.55	0.97	1.35
Facility Total (excluding fugitive emissions)			0.02	0.07	2.6E-03	0.01	3.2E-03	0.01	2.2E-04	3.5E-04	8.7E-04	1.6E-03	0.06	0.11	0.09	0.24

1. Emissions routed to combustors are divided evenly by the total number of combustors (i.e., Combustor Point Emissions = [storage tanks emissions + captured loading emissions] / [number of combustors] + combustor emissions). However, emissions can be routed to either combustor.

Company Name: EOT Production, LLC
Facility Name: OXF156 Wellpad
Project Description: G70-B Application

Produced Fluids Storage Vessels

Potential Throughput

Operational Hours	8,760 hrs/yr
Maximum Condensate Throughput[1]	81,288 bbl/yr
Maximum Produced Water Throughput[2]	483,394 bbl/yr

[1] Based on the highest monthly throughput recorded at the site (August 2015). Includes a safety factor of 20%.
[2] Based on the highest monthly throughput recorded at the site (March 2015). Includes a safety factor of 20%.
Overall Control Efficiency of Combustor 98%

Storage Tanks - Uncontrolled

	Breathing		Working		Flashing		Total Emissions	
	lb/hr	tpy	lb/hr	tpy	lb/hr	tpy	lb/hr	tpy
Methane	<0.001	<0.001	<0.001	<0.001	9.457	41.421	9.457	41.421
Ethane	<0.001	<0.001	<0.001	<0.001	7.516	32.921	7.516	32.921
Propane	0.065	0.284	0.946	4.144	6.180	27.069	7.191	31.497
Isobutane	0.015	0.066	**0.191**	0.837	1.410	6.176	**1.616**	7.079
n-Butane	0.030	0.130	**0.379**	1.662	2.910	12.744	**3.319**	14.536
Isopentane	0.010	0.043	0.123	0.540	0.941	4.121	1.074	4.704
n-Pentane	0.009	0.038	0.108	0.474	0.836	3.663	0.953	4.174
n-Hexane	0.002	0.010	0.030	0.131	0.233	1.021	0.265	1.163
Cyclohexane	1.2E-04	0.001	0.002	0.007	0.017	0.074	0.019	0.082
Methylcyclopentane	<0.001	<0.001	<0.001	<0.001	<0.001	<0.001	<0.001	<0.001
n-Heptane	0.003	0.014	0.040	0.173	0.330	1.443	0.372	1.630
n-Octane	0.001	0.004	0.012	0.055	0.106	0.466	0.120	0.525
n-Nonane	3.0E-04	0.001	0.004	0.017	0.034	0.150	0.038	0.168
n-Decane	1.6E-04	0.001	0.002	0.009	0.019	0.082	0.021	0.092
n-Undecane	<0.001	<0.001	<0.001	<0.001	<0.001	<0.001	<0.001	<0.001
Dodecane	<0.001	<0.001	<0.001	<0.001	<0.001	<0.001	<0.001	<0.001
Triethylene Glycol	<0.001	<0.001	<0.001	<0.001	<0.001	<0.001	<0.001	<0.001
Cyclopentane	<0.001	<0.001	<0.001	<0.001	<0.001	<0.001	<0.001	<0.001
Isohexane	0.004	0.018	0.050	0.220	0.387	1.693	**0.441**	1.931
3-Methylpentane	<0.001	<0.001	<0.001	<0.001	<0.001	<0.001	<0.001	<0.001
Neohexane	<0.001	<0.001	<0.001	<0.001	<0.001	<0.001	<0.001	<0.001
2,3-Dimethylbutane	<0.001	<0.001	<0.001	<0.001	<0.001	<0.001	**<0.001**	<0.001
Methylcyclohexane	<0.001	<0.001	<0.001	<0.001	<0.001	<0.001	<0.001	<0.001
Decane, 2-Methyl-	<0.001	<0.001	<0.001	<0.001	<0.001	<0.001	<0.001	<0.001
Benzene	3.3E-05	1.5E-04	0.001	0.006	0.010	0.043	0.011	0.049
Toluene	1.0E-04	4.6E-04	0.002	0.009	0.031	0.137	0.033	0.146
Ethylbenzene	9.0E-06	3.9E-05	1.3E-04	0.001	0.002	0.011	0.003	0.011
m-Xylene	3.2E-05	1.4E-04	4.6E-04	0.002	0.009	0.039	0.009	0.041
Isooctane	3.3E-06	1.4E-05	4.1E-05	1.8E-04	3.4E-04	0.001	3.8E-04	0.002
Total VOC Emissions:	0.14	0.61	1.89	8.29	13.46	58.93	15.49	67.83
Total HAP Emissions:	2.6E-03	0.01	0.03	0.15	0.29	1.25	0.32	1.41

[1] Uncontrolled emissions calculation using Promax (sum of produced water and condensate). Non-methane emissions are taken from the tank emissions stencil. Methane emissions are taken from the flash stream composition.
[2] Composition of condensate from OXP-156 sample from 2/14/2015.

Company Name: EQT Production, LLC
Facility Name: OXF156 Wellpad
Project Description: G70-B Application

Produced Fluids Storage Vessels

Storage Tanks - Controlled

	Breathing		Working		Flashing		Total Emissions	
	lb/hr	tpy			lb/hr	tpy	lb/hr	tpy
Methane	<0.001	<0.001	<0.001	<0.001	0.189	0.828	0.189	0.828
Ethane	<0.001	<0.001	<0.001	<0.001	0.150	0.658	0.150	0.658
Propane	0.001	0.006	0.019	0.083	0.124	0.541	0.144	0.630
Isobutane	3.0E-04	0.001	0.004	0.017	0.028	0.124	0.032	0.142
n-Butane	0.001	0.003	0.008	0.033	0.058	0.255	0.066	0.291
Isopentane	2.0E-04	0.001	0.002	0.011	0.019	0.082	0.021	0.094
n-Pentane	1.7E-04	0.001	0.002	0.009	0.017	0.073	0.019	0.083
n-Hexane	4.8E-05	2.1E-04	0.001	0.003	0.005	0.020	0.005	0.023
Cyclohexane	2.5E-06	1.1E-05	3.1E-05	1.4E-04	3.4E-04	0.001	3.7E-04	0.002
Methylcyclopentane	<0.001	<0.001	<0.001	<0.001	<0.001	<0.001	<0.001	<0.001
n-Heptane	6.3E-05	2.8E-04	0.001	0.003	0.007	0.029	0.007	0.033
n-Octane	2.0E-05	8.7E-05	2.5E-04	0.001	0.002	0.009	0.002	0.011
n-Nonane	6.1E-06	2.7E-05	7.6E-05	3.3E-04	0.001	0.003	0.001	0.003
n-Decane	3.2E-06	1.4E-05	4.0E-05	1.8E-04	3.7E-04	0.002	4.2E-04	0.002
n-Undecane	<0.001	<0.001	<0.001	<0.001	<0.001	<0.001	<0.001	<0.001
Dodecane	<0.001	<0.001	<0.001	<0.001	<0.001	<0.001	<0.001	<0.001
Triethylene Glycol	<0.001	<0.001	<0.001	<0.001	<0.001	<0.001	<0.001	<0.001
Cyclopentane	<0.001	<0.001	<0.001	<0.001	<0.001	<0.001	<0.001	<0.001
Isohexane	8.0E-05	3.5E-04	0.001	0.004	0.008	0.034	0.009	0.039
3-Methylpentane	<0.001	<0.001	<0.001	<0.001	<0.001	<0.001	<0.001	<0.001
Neohexane	<0.001	<0.001	<0.001	<0.001	<0.001	<0.001	<0.001	<0.001
2,3-Dimethylbutane	<0.001	<0.001	<0.001	<0.001	<0.001	<0.001	<0.001	<0.001
Methylcyclohexane	<0.001	<0.001	<0.001	<0.001	<0.001	<0.001	<0.001	<0.001
Decane, 2-Methyl-	<0.001	<0.001	<0.001	<0.001	<0.001	<0.001	<0.001	<0.001
Benzene	6.7E-07	2.9E-06	2.8E-05	1.2E-04	2.0E-04	0.001	2.2E-04	0.001
Toluene	2.1E-06	9.2E-06	4.0E-05	1.8E-04	0.001	0.003	0.001	0.003
Ethylbenzene	1.8E-07	7.9E-07	2.6E-06	1.1E-05	4.8E-05	2.1E-04	5.1E-05	2.2E-04
m-Xylene	6.4E-07	2.8E-06	9.2E-06	4.0E-05	1.8E-04	0.001	1.9E-04	0.001
Isooctane	6.5E-08	2.9E-07	8.2E-07	3.6E-06	6.7E-06	2.9E-05	7.6E-06	3.3E-05
Total VOC Emissions:	2.8E-03	0.01	0.04	0.17	0.27	1.18	0.31	1.36
Total HAP Emissions:	5.1E-05	2.3E-04	6.8E-04	3.0E-03	5.7E-03	0.03	0.01	0.03

Company Name:	EOT Production, LLC
Facility Name:	OXF156 Wellpad
Project Description:	G70-B Application

VRU Engine

Engine Information:

Manufacturer:	Ford
Model No.:	CSG-637
Engine ID	S017
Stroke Cycle:	4-stroke
Type of Burn:	Rich
Rated Horsepower (bhp):	110

Engine Fuel Information:

Fuel Type:	Natural Gas
Higher Heating Value (HHV) (Btu/scf):	1,050
Specific Fuel Consumption (Btu/bhp-hr):	7,000
Maximum Fuel Consumption at 100% Load (scf/hr):	733
Heat Input (MMBtu/hr):	0.77
Potential Fuel Consumption (MMBtu/yr):	6,745
Max. Fuel Consumption at 100%(MMscf/hr):	0.0007
Max. Fuel Consumption (MMscf/yr):	6.4
Max. Annual Hours of Operation (hr/yr):	8,760

Engine Emissions Data:

Pollutant	Emission Factor	Units	Maximum Potential Emissions		Estimation Basis / Emission Factor Source
			lbs/hr	tpy	
NO_x	1.00	g/bhp-hr	0.24	1.06	Manufacturer
VOC (excludes HCHO)	0.70	g/bhp-hr	0.17	0.74	Manufacturer
VOC (includes HCHO)	---	---	0.19	0.81	VOC + HCHO
CO	2.00	g/bhp-hr	0.49	2.12	Manufacturer
SO_X	0.001	lb/MMBtu	0.00	0.00	AP-42, Table 3.2-3 (Aug-2000)
PM_{10}	0.02	lb/MMBtu	0.01	0.07	AP-42, Table 3.2-3 (Aug-2000)
$PM_{2.5}$	0.02	lb/MMBtu	0.01	0.07	AP-42, Table 3.2-3 (Aug-2000)
Formaldehyde (HCHO)	0.02	lb/MMBtu	0.02	0.07	AP-42, Table 3.2-3 (Aug-2000)
GHG (CO_2e)	See Table Below		90	395	40 CFR 98, Tables C-1 & C-2
Other (Total HAP)	See Table Below		0.02	0.11	AP-42, Table 3.2-3 (Aug-2000)

Notes:

1. PM_{10} and $PM_{2.5}$ are total values (filterable + condensable).
2. GHG (CO_2e) is carbon dioxide equivalent, which is the summation of CO_2 (GWP = 1) + CH_4 (GWP = 25) + N_2O (GWP = 298).
3. Total HAP is the summation of all hazardous air pollutants for which there is a published emission factor for this source type.

Company Name: EQT Production, LLC
Facility Name: OXF156 Wellpad
Project Description: G70-B Application

VRU Engine

Greenhouse Gas (GHG) & Hazardous Air Pollutant (HAP) Emissions Calculations:

Pollutant	Emission Factor	Units	Maximum Potential Emissions		Estimation Basis / Emission Factor Source
			lbs/hr	tpy	
GHGs:					
CO_2	53.06	kg/MMBtu	90.09	394.59	40 CFR 98, Table C-1
CH_4	0.001	kg/MMBtu	1.7E-03	7.4E-03	40 CFR 98, Table C-2
N_2O	0.0001	kg/MMBtu	1.7E-04	7.4E-04	40 CFR 98, Table C-2
GHG (CO_2e)			**90**	**395**	
Organic HAPs:					
1,1,2,2-Tetrachloroethane	2.53E-05	lb/MMBtu	1.9E-05	8.5E-05	AP-42, Table 3.2-3 (Aug-2000)
1,1,2-Trichloroethane	1.53E-05	lb/MMBtu	1.2E-05	5.2E-05	AP-42, Table 3.2-3 (Aug-2000)
1,3-Butadiene	6.63E-04	lb/MMBtu	5.1E-04	2.2E-03	AP-42, Table 3.2-3 (Aug-2000)
1,3-Dichloropropene	1.27E-05	lb/MMBtu	9.8E-06	4.3E-05	AP-42, Table 3.2-3 (Aug-2000)
Acetaldehyde	2.79E-03	lb/MMBtu	2.1E-03	9.4E-03	AP-42, Table 3.2-3 (Aug-2000)
Acrolein	2.63E-03	lb/MMBtu	2.0E-03	8.9E-03	AP-42, Table 3.2-3 (Aug-2000)
Benzene	1.58E-03	lb/MMBtu	1.2E-03	5.3E-03	AP-42, Table 3.2-3 (Aug-2000)
Carbon Tetrachloride	1.77E-05	lb/MMBtu	1.4E-05	6.0E-05	AP-42, Table 3.2-3 (Aug-2000)
Chlorobenzene	1.29E-05	lb/MMBtu	9.9E-06	4.4E-05	AP-42, Table 3.2-3 (Aug-2000)
Chloroform	1.37E-05	lb/MMBtu	1.1E-05	4.6E-05	AP-42, Table 3.2-3 (Aug-2000)
Ethylbenzene	2.48E-05	lb/MMBtu	1.9E-05	8.4E-05	AP-42, Table 3.2-3 (Aug-2000)
Ethylene Dibromide	2.13E-05	lb/MMBtu	1.6E-05	7.2E-05	AP-42, Table 3.2-3 (Aug-2000)
Methanol	3.06E-03	lb/MMBtu	2.4E-03	1.0E-02	AP-42, Table 3.2-3 (Aug-2000)
Methylene Chloride	4.12E-05	lb/MMBtu	3.2E-05	1.4E-04	AP-42, Table 3.2-3 (Aug-2000)
Naphthalene	9.71E-05	lb/MMBtu	7.5E-05	3.3E-04	AP-42, Table 3.2-3 (Aug-2000)
PAH	1.41E-04	lb/MMBtu	1.1E-04	4.8E-04	AP-42, Table 3.2-3 (Aug-2000)
Styrene	1.19E-05	lb/MMBtu	9.2E-06	4.0E-05	AP-42, Table 3.2-3 (Aug-2000)
Toluene	5.58E-04	lb/MMBtu	4.3E-04	1.9E-03	AP-42, Table 3.2-3 (Aug-2000)
Vinyl Chloride	7.18E-06	lb/MMBtu	5.5E-06	2.4E-05	AP-42, Table 3.2-3 (Aug-2000)
Xylene	**1.95E-04**	**lb/MMBtu**	**1.5E-04**	**6.6E-04**	**AP-42, Table 3.2-3 (Aug-2000)**
Total HAP			**0.02**	**0.11**	

Company Name: EQT Production, LLC
Facility Name: OXF156 Wellpad
Project Description: G70-B Application

Sand Separator Tank

Throughput Parameter	Value	Units
Tank Capacity	5,880	gallons
Operational Hours	8,760	hrs/yr
Throughput	280	bbl/month
Percent Produced Water	50%	
Total Produced Water Throughput	140	bbl/month

[1] Conservatively assumes 2 turnovers/month of sand and produced water.

Description	Potential Throughput (gal/yr)
Produced Water and Sand	141,120

Sand Separator Tank (140 bbl) - Uncontrolled *(Per tank)* [2,3]

Constituent	Total Emissions [1] lb/hr	tpy
Methane	0.021	0.094
Ethane	0.038	0.166
Propane	0.047	0.207
Isobutane	0.009	0.038
n-Butane	0.018	0.079
Isopentane	0.005	0.021
n-Pentane	0.005	0.021
Hexanes	0.002	0.008
Heptanes	0.001	0.006
Octane	<0.001	0.002
Nonane	<0.001	<0.001
Decane	<0.001	<0.001
Benzene	<0.001	<0.001
Toluene	<0.001	<0.001
Ethylbenzene	<0.001	<0.001
Xylenes	<0.001	<0.001
n-Hexane	0.001	0.005
2,2,4-Trimethylpentane	<0.001	<0.001
Total HC Emissions:	0.148	0.649
Total VOC Emissions:	0.089	0.389
Total HAP Emissions:	0.002	0.010

[2] E&P TANK 2.0 calculates working, breathing and flashing losses and reports the sum as one total.
[3] E&P TANK v2.0 emission calculations are based on OXF-156 sample from 2/14/2015.

Company Name: EQT Production, LLC
Facility Name: OXF156 Wellpad
Project Description: G70-B Application

Sand Separator Tank

Sand Separator Tank (140 bbl) - Controlled *(Per tank)*

Constituent	Total Emissions lb/hr	Total Emissions tpy
Methane	0.021	0.094
Ethane	0.038	0.166
Propane	0.047	0.207
Isobutane	0.009	0.038
n-Butane	0.018	0.079
Isopentane	0.005	0.021
n-Pentane	0.005	0.021
Hexanes	0.002	0.008
Heptanes	0.001	0.006
Octane	<0.001	0.002
Nonane	<0.001	<0.001
Decane	<0.001	<0.001
Benzene	<0.001	<0.001
Toluene	<0.001	<0.001
Ethylbenzene	<0.001	<0.001
Xylenes	<0.001	<0.001
n-Hexane	0.001	0.005
2,2,4-Trimethylpentane	<0.001	<0.001
Total Emissions:	0.148	0.649
Total VOC Emissions:	0.089	0.389
Total HAP Emissions:	0.002	0.010

Company Name: EQT Production, LLC
Facility Name: OXF156 Wellpad
Project Description: G70-B Application

Tank Combustor

Source Designation:	**C001 & C002**
Pilot Fuel Used:	Natural Gas
Higher Heating Value (HHV) (Btu/scf):	1,050
Pilot Rating (MMBtu/hr)	0.05
Combustor Rating (MMBtu/hr)[1]	11.66
Combustor Rating (Mscfd)[1]	188.38
Combustor Rating (scf/hr)	7849.17
Pilot Fuel Consumption (scf/hr):	50.00
Potential Annual Hours of Operation (hr/yr):	8,760

[1] Maximum heat input for 48" model from Leed Enclosed Combustor Operations Manual

Enclosed Combustor Emissions

Pollutant	Emission Factors[2] (lb/MMBtu)	Combustor (lb/hr)	Combustor (tpy)	Pilot (lb/hr)	Pilot (tpy)	Total (lb/hr)	Total (tpy)
NO_x	0.10	1.14	5.01	5.1E-03	0.02	1.15	5.03
CO	0.08	0.96	4.21	4.3E-03	0.02	0.96	4.22
VOC	5.4E-03	---	---	2.8E-04	1.2E-03	0.00	0.00
SO_2	5.9E-04	0.01	0.03	3.1E-05	1.4E-04	0.01	0.03
PM/PM_{10}	0.01	0.09	0.38	3.9E-04	1.7E-03	0.09	0.38
CO_2	117.00	1364.189	5975.146	6.14	26.90	1370.33	6002.05
CH_4	2.2E-03	---	---	1.2E-04	5.1E-04	0.00	0.00
N_2O	2.2E-04	2.6E-03	0.01	1.2E-05	5.1E-05	2.6E-03	0.01

[2] Emission factors from AP-42 Ch. 1.4 for natural gas combustion were used as they were determined to be most representative of the process. Ch. 5.3 (Natural Gas Processing) was consulted, however, factors contained there are appropriate for amine gas sweetening processes, which is not the case at the wellpad. Also, Ch. 13.5 (Industrial Flares) was consulted, but since the control device in this case is an enclosed combustor vs. an elevated flare, these factors were also determined to be inappropriate.

Combustor Maximum Loading:

$$\frac{7849.17\ \text{scf}}{\text{hr}} \cdot \frac{\text{lb-mol}}{379.5\ \text{scf}} \cdot \frac{20.21\ \text{lb}}{\text{lb-mol}} = 418.09\ \text{lb/hr}$$

Company Name:	**EQT Production, LLC**
Facility Name:	**OXF156 Wellpad**
Project Description:	**G70-B Application**

Line Heaters

Source Designation:	**S007-S012**
Fuel Used:	Natural Gas
Higher Heating Value (HHV) (Btu/scf):	1,050
Heat Input (MMBtu/hr)	1.54
Fuel Consumption (MMscf/hr):	1.47E-03
Potential Annual Hours of Operation (hr/yr):	8,760

Criteria and Manufacturer Specific Pollutant Emission Rates:

Pollutant	Emission Factor (lb/MMscf)[1,4]	Potential Emissions	
		(lb/hr)[2]	(tons/yr)[3]
NO_x	100	0.15	0.64
CO	84	0.12	0.54
VOC	5.5	0.01	0.04
SO_2	0.6	8.8E-04	3.9E-03
PM Total	7.6	0.01	0.05
PM Condensable	5.7	0.01	0.04
PM_{10} (Filterable)	1.9	2.8E-03	0.01
$PM_{2.5}$ (Filterable)	1.9	2.8E-03	0.01
Lead	5.00E-04	7.3E-07	3.2E-06
CO_2	117.0	180.00	788.38
CH_4	2.21E-03	3.4E-03	1.5E-02
N_2O	2.21E-04	3.4E-04	1.5E-03

Company Name: EOT Production, LLC
Facility Name: OXF156 Wellpad
Project Description: G70-B Application

Line Heaters

Hazardous Air Pollutant (HAP) Potential Emissions:

Pollutant	Emission Factor (lb/MMscf)[1]	Potential Emissions	
		(lb/hr)[2]	(tons/yr)[3]
HAPs:			
2-Methylnaphthalene	2.4E-05	3.5E-08	1.5E-07
3-Methylchloranthrene	1.8E-06	2.6E-09	1.2E-08
7,12-Dimethylbenz(a)anthracene	1.6E-05	2.3E-08	1.0E-07
Acenaphthene	1.8E-06	2.6E-09	1.2E-08
Acenaphthylene	1.8E-06	2.6E-09	1.2E-08
Anthracene	2.4E-06	3.5E-09	1.5E-08
Benz(a)anthracene	1.8E-06	2.6E-09	1.2E-08
Benzene	2.1E-03	3.1E-06	1.3E-05
Benzo(a)pyrene	1.2E-06	1.8E-09	7.7E-09
Benzo(b)fluoranthene	1.8E-06	2.6E-09	1.2E-08
Benzo(g,h,i)perylene	1.2E-06	1.8E-09	7.7E-09
Benzo(k)fluoranthene	1.8E-06	2.6E-09	1.2E-08
Chrysene	1.8E-06	2.6E-09	1.2E-08
Dibenzo(a,h) anthracene	1.2E-06	1.8E-09	7.7E-09
Dichlorobenzene	1.2E-03	1.8E-06	7.7E-06
Fluoranthene	3.0E-06	4.4E-09	1.9E-08
Fluorene	2.8E-06	4.1E-09	1.8E-08
Formaldehyde	7.5E-02	1.1E-04	4.8E-04
Hexane	1.8E+00	2.6E-03	1.2E-02
Indo(1,2,3-cd)pyrene	1.8E-06	2.6E-09	1.2E-08
Naphthalene	6.1E-04	8.9E-07	3.9E-06
Phenanthrene	1.7E-05	2.5E-08	1.1E-07
Pyrene	5.0E-06	7.3E-09	3.2E-08
Toluene	3.4E-03	5.0E-06	2.2E-05
Arsenic	2.0E-04	2.9E-07	1.3E-06
Beryllium	1.2E-05	1.8E-08	7.7E-08
Cadmium	1.1E-03	1.6E-06	7.1E-06
Chromium	1.4E-03	2.1E-06	9.0E-06
Cobalt	8.4E-05	1.2E-07	5.4E-07
Manganese	3.8E-04	5.6E-07	2.4E-06
Mercury	2.6E-04	3.8E-07	1.7E-06
Nickel	2.1E-03	3.1E-06	1.3E-05
Selenium	2.4E-05	3.5E-08	1.5E-07
Total HAP		**2.8E-03**	**1.2E-02**

[1] Emission factors from AP-42 Section 1.4 "Natural Gas Combustion" Tables 1.4-1, 1.4-2, & 1.4-3
[2] Emission Rate (lb/hr) = Rated Capacity (MMscf/hr) × Emission Factor (lb/MMscf).
[3] Annual Emissions $(\text{tons/yr})_{\text{Potential}} = (\text{lb/hr})_{\text{Emissions}} \times$ (Maximum Allowable Operating Hours, 8760 hr/yr) × (1 ton/2000 lb).
[4] GHG Emission factors from Tables C-1 and C-2, 40 CFR 98, Subpart C.

Company Name:	**EQT Production, LLC**
Facility Name:	**OXF156 Wellpad**
Project Description:	**G70-B Application**

Line Heater

Source Designation:	**S015**
Fuel Used:	Natural Gas
Higher Heating Value (HHV) (Btu/scf):	1,050
Heat Input (MMBtu/hr)	1.15
Fuel Consumption (MMscf/hr):	1.10E-03
Potential Annual Hours of Operation (hr/yr):	8,760

Criteria and Manufacturer Specific Pollutant Emission Rates:

Pollutant	Emission Factor (lb/MMscf)[1,4]	Potential Emissions (lb/hr)[2]	Potential Emissions (tons/yr)[3]
NO_x	100	0.11	0.48
CO	84	0.09	0.40
VOC	5.5	0.01	0.03
SO_2	0.6	6.6E-04	2.9E-03
PM Total	7.6	0.01	0.04
PM Condensable	5.7	0.01	0.03
PM_{10} (Filterable)	1.9	2.1E-03	0.01
$PM_{2.5}$ (Filterable)	1.9	2.1E-03	0.01
Lead	5.00E-04	5.5E-07	2.4E-06
CO_2	117.0	135.00	591.29
CH_4	2.21E-03	2.5E-03	1.1E-02
N_2O	2.21E-04	2.5E-04	1.1E-03

Company Name: EQT Production, LLC
Facility Name: OXF156 Wellpad
Project Description: G70-B Application

Line Heater

Hazardous Air Pollutant (HAP) Potential Emissions:

Pollutant	Emission Factor (lb/MMscf)[1]	Potential Emissions (lb/hr)[2]	Potential Emissions (tons/yr)[3]
HAPs:			
2-Methylnaphthalene	2.4E-05	2.6E-08	1.2E-07
3-Methylchloranthrene	1.8E-06	2.0E-09	8.7E-09
7,12-Dimethylbenz(a)anthracene	1.6E-05	1.8E-08	7.7E-08
Acenaphthene	1.8E-06	2.0E-09	8.7E-09
Acenaphthylene	1.8E-06	2.0E-09	8.7E-09
Anthracene	2.4E-06	2.6E-09	1.2E-08
Benz(a)anthracene	1.8E-06	2.0E-09	8.7E-09
Benzene	2.1E-03	2.3E-06	1.0E-05
Benzo(a)pyrene	1.2E-06	1.3E-09	5.8E-09
Benzo(b)fluoranthene	1.8E-06	2.0E-09	8.7E-09
Benzo(g,h,i)perylene	1.2E-06	1.3E-09	5.8E-09
Benzo(k)fluoranthene	1.8E-06	2.0E-09	8.7E-09
Chrysene	1.8E-06	2.0E-09	8.7E-09
Dibenzo(a,h) anthracene	1.2E-06	1.3E-09	5.8E-09
Dichlorobenzene	1.2E-03	1.3E-06	5.8E-06
Fluoranthene	3.0E-06	3.3E-09	1.4E-08
Fluorene	2.8E-06	3.1E-09	1.3E-08
Formaldehyde	7.5E-02	8.2E-05	3.6E-04
Hexane	1.8E+00	2.0E-03	8.7E-03
Indo(1,2,3-cd)pyrene	1.8E-06	2.0E-09	8.7E-09
Naphthalene	6.1E-04	6.7E-07	2.9E-06
Phenanthrene	1.7E-05	1.9E-08	8.2E-08
Pyrene	5.0E-06	5.5E-09	2.4E-08
Toluene	3.4E-03	3.7E-06	1.6E-05
Arsenic	2.0E-04	2.2E-07	9.6E-07
Beryllium	1.2E-05	1.3E-08	5.8E-08
Cadmium	1.1E-03	1.2E-06	5.3E-06
Chromium	1.4E-03	1.5E-06	6.7E-06
Cobalt	8.4E-05	9.2E-08	4.0E-07
Manganese	3.8E-04	4.2E-07	1.8E-06
Mercury	2.6E-04	2.9E-07	1.3E-06
Nickel	2.1E-03	2.3E-06	1.0E-05
Selenium	2.4E-05	2.6E-08	1.2E-07
Total HAP		**2.1E-03**	**9.1E-03**

[1] Emission factors from AP-42 Section 1.4 "Natural Gas Combustion" Tables 1.4-1, 1.4-2, & 1.4-3
[2] Emission Rate (lb/hr) = Rated Capacity (MMscf/hr) × Emission Factor (lb/MMscf).
[3] Annual Emissions $(tons/yr)_{Potential} = (lb/hr)_{Emissions} \times$ (Maximum Allowable Operating Hours, 8760 hr/yr) × (1 ton/2000 lb).
[4] GHG Emission factors from Tables C-1 and C-2, 40 CFR 98, Subpart C.

Company Name: EQT Production, LLC
Facility Name: OXF156 Wellpad
Project Description: G70-B Application

Thermoelectric Generator

Source Designation:	**S013-S014**
Fuel Used:	Natural Gas
Higher Heating Value (HHV) (Btu/scf):	1,050
Heat Input (MMBtu/hr) [1]	0.013
Fuel Consumption (MMscf/hr):	1.23E-05
Potential Annual Hours of Operation (hr/yr):	8,760

[1] Global Themorelectric specification sheet states 311 ft^3/day at 1000 BTU/ft^3.

Criteria and Manufacturer Specific Pollutant Emission Rates:

Pollutant	Emission Factor (lb/MMscf)[2,5]	Potential Emissions	
		(lb/hr)[3]	(tons/yr)[4]
NO_x	100	1.2E-03	0.01
CO	84	1.0E-03	4.5E-03
VOC	5.5	6.8E-05	3.0E-04
SO_2	0.6	7.4E-06	3.2E-05
PM Total	7.6	9.4E-05	4.1E-04
PM Condensable	5.7	7.0E-05	3.1E-04
PM_{10} (Filterable)	1.9	2.3E-05	1.0E-04
$PM_{2.5}$ (Filterable)	1.9	2.3E-05	1.0E-04
Lead	5.00E-04	6.2E-09	2.7E-08
CO_2	116.9	1.51	6.64
CH_4	2.21E-03	2.9E-05	1.3E-04
N_2O	2.21E-04	2.9E-06	1.3E-05

Company Name: EQT Production, LLC
Facility Name: OXF156 Wellpad
Project Description: G70-B Application

Thermoelectric Generator

Hazardous Air Pollutant (HAP) Potential Emissions:

Pollutant	Emission Factor (lb/MMscf)[2]	Potential Emissions	
		(lb/hr)[3]	(tons/yr)[4]
HAPs:			
2-Methylnaphthalene	2.4E-05	3.0E-10	1.3E-09
3-Methylchloranthrene	1.8E-06	2.2E-11	9.7E-11
7,12-Dimethylbenz(a)anthracene	1.6E-05	2.0E-10	8.6E-10
Acenaphthene	1.8E-06	2.2E-11	9.7E-11
Acenaphthylene	1.8E-06	2.2E-11	9.7E-11
Anthracene	2.4E-06	3.0E-11	1.3E-10
Benz(a)anthracene	1.8E-06	2.2E-11	9.7E-11
Benzene	2.1E-03	2.6E-08	1.1E-07
Benzo(a)pyrene	1.2E-06	1.5E-11	6.5E-11
Benzo(b)fluoranthene	1.8E-06	2.2E-11	9.7E-11
Benzo(g,h,i)perylene	1.2E-06	1.5E-11	6.5E-11
Benzo(k)fluoranthene	1.8E-06	2.2E-11	9.7E-11
Chrysene	1.8E-06	2.2E-11	9.7E-11
Dibenzo(a,h) anthracene	1.2E-06	1.5E-11	6.5E-11
Dichlorobenzene	1.2E-03	1.5E-08	6.5E-08
Fluoranthene	3.0E-06	3.7E-11	1.6E-10
Fluorene	2.8E-06	3.5E-11	1.5E-10
Formaldehyde	7.5E-02	9.3E-07	4.1E-06
Hexane	1.8E+00	2.2E-05	9.7E-05
Indo(1,2,3-cd)pyrene	1.8E-06	2.2E-11	9.7E-11
Naphthalene	6.1E-04	7.5E-09	3.3E-08
Phenanthrene	1.7E-05	2.1E-10	9.2E-10
Pyrene	5.0E-06	6.2E-11	2.7E-10
Toluene	3.4E-03	4.2E-08	1.8E-07
Arsenic	2.0E-04	2.5E-09	1.1E-08
Beryllium	1.2E-05	1.5E-10	6.5E-10
Cadmium	1.1E-03	1.4E-08	5.9E-08
Chromium	1.4E-03	1.7E-08	7.6E-08
Cobalt	8.4E-05	1.0E-09	4.5E-09
Manganese	3.8E-04	4.7E-09	2.1E-08
Mercury	2.6E-04	3.2E-09	1.4E-08
Nickel	2.1E-03	2.6E-08	1.1E-07
Selenium	2.4E-05	3.0E-10	1.3E-09
Total HAP		**2.3E-05**	**1.0E-04**

[2] Emission factors from AP-42 Section 1.4 "Natural Gas Combustion" Tables 1.4-1, 1.4-2, & 1.4-3
[3] Emission Rate (lb/hr) = Rated Capacity (MMscf/hr) × Emission Factor (lb/MMscf).
[4] Annual Emissions $(tons/yr)_{Potential} = (lb/hr)_{Emissions} \times$ (Maximum Allowable Operating Hours, 8760 hr/yr) × (1 ton/2000 lb).
[5] GHG Emission factors from Tables C-1 and C-2, 40 CFR 98, Subpart C.

Company Name: EQT Production, LLC
Facility Name: OXF156 Wellpad
Project Description: G70-B Application

Liquid Loading

Throughput 23,700,180 gal/yr
Capture Efficiency 70% non-tested tanker trucks
Control Efficiency 98% Combustor destruction efficiency

Liquid Loading Emissions

	Uncontrolled Emissions		Uncaptured Emissions		Controlled Emissions	
	lb/hr	tpy	lb/hr	tpy	lb/hr	tpy
Propane	77.715	20.206	23.315	6.062	1.088	0.283
Isobutane	16.808	4.370	5.042	1.311	0.235	0.061
n-Butane	33.166	8.623	9.950	2.587	0.464	0.121
Isopentane	10.870	2.826	3.261	0.848	0.152	0.040
n-Pentane	9.531	2.478	2.859	0.743	0.133	0.035
n-Hexane	2.642	0.687	0.793	0.206	0.037	0.010
Cyclohexane	0.137	0.036	0.041	0.011	0.002	0.000
Methylcyclopentane	<0.001	<0.001	<0.001	<0.001	<0.001	<0.001
n-Heptane	3.488	0.907	1.046	0.272	0.049	0.013
n-Octane	1.100	0.286	0.330	0.086	0.015	0.004
n-Nonane	0.336	0.087	0.101	0.026	0.005	0.001
n-Decane	0.176	0.046	0.053	0.014	0.002	0.001
n-Undecane	<0.001	<0.001	<0.001	<0.001	<0.001	<0.001
Dodecane	<0.001	<0.001	<0.001	<0.001	<0.001	<0.001
Triethylene Glycol	<0.001	<0.001	<0.001	<0.001	<0.001	<0.001
Cyclopentane	<0.001	<0.001	<0.001	<0.001	<0.001	<0.001
Isohexane	4.431	1.152	1.329	0.346	0.062	0.016
3-Methylpentane	<0.001	<0.001	<0.001	<0.001	<0.001	<0.001
Neohexane	<0.001	<0.001	<0.001	<0.001	<0.001	<0.001
2,3-Dimethylbutane	<0.001	<0.001	<0.001	<0.001	<0.001	<0.001
Methylcyclohexane	<0.001	<0.001	<0.001	<0.001	<0.001	<0.001
Decane, 2-Methyl-	<0.001	<0.001	<0.001	<0.001	<0.001	<0.001
Benzene	0.080	0.021	0.024	0.006	0.001	0.000
Toluene	0.148	0.038	0.044	0.012	0.002	0.001
Ethylbenzene	0.011	0.003	0.003	0.001	0.000	0.000
m-Xylene	0.038	0.010	0.011	0.003	0.001	0.000
Isooctane	0.004	0.001	0.001	0.000	0.000	0.000
Total VOC Emissions:	160.682	41.777	48.205	12.533	2.250	0.585
Total HAP Emissions:	2.923	0.760	0.877	0.228	0.041	0.011

[1] Uncontrolled emissions calculation using Promax (sum of produced water and condensate).
[2] Hourly emissions assume two hours of loading per day, five days per week.

Company Name: EQT Production, LLC
Facility Name: OXF156 Wellpad
Project Description: G70-B Application

Fugitive Emissions

Fugitive Emissions from Component Leaks

Facility Equipment Type[1]	Valves	Connectors	Open-Ended Lines	Pressure Relief Devices
Wellhead	8	38	0.5	0
Separators	1	6	0	0
Meters/Piping	12	45	0	0
Compressors	12	57	0	0
In-line heaters	14	65	2	1
Dehydrators	24	90	2	2

[1] Table W-1B to Subpart W of Part 98 —Default Average Component Counts for Major Onshore Natural Gas Production

Fugitive VOC/Total Emissions from Component Leaks

Equipment Type	Service	Emission Factors[1] (kg/hr/source)	Facility Equipment Count[2] (units)	TOC Annual Fugitive Emissions (tpy)	Weight Fraction VOC	Weight Fraction HAP	VOC Emissions[3] (tpy)	HAP Emissions[3] (tpy)
Pumps	Light Liquid	0.01990	11	2.02	1.00	0.04	2.02	0.08
Valves	Gas	0.00597	356	20.49	0.16	0.01	3.21	0.12
Pressure Relief Valves	Gas	0.10400	25	24.60	0.16	0.01	3.86	0.15
Open-Ended Lines	All	0.00170	26	0.42	0.16	0.01	0.07	2.5E-03
Connectors	All	0.00183	1,578	27.88	0.16	0.01	4.37	0.17
Compressor	Gas	0.22800	1	2.20	0.16	0.01	0.35	0.01
Intermittent Pneumatic Devices[4]	Gas	13.5	30	---	---	---	4.94	0.19
			Emission Totals:	**75.42**	**—**	**—**	**18.81**	**0.72**

[1] U.S. EPA. Office of Air Quality Planning and Standards. *Protocol for Equipment Leak Emission Estimates*. Table 2-1. (Research Triangle Park, NC: U.S. EPA EPA-453/R-95-017, 1995). SOCMI factors were used as it was representative of natural gas liquids extraction. The pneumatic controller value is from 40 CFR 98 Subpart W, Table W-1A (scf/hr/component). Pneumatic assumes operation 1/3 of the year.

[2] Assumes one pump for each tank and one meter per wellhead. Pressure relief valves count includes one Emergency Pressure Relief valve and one lock-down hatch for each storage tank. Pneumatic devices assume 5 per well. A 50% compliance margin is added to the component counts based on Subpart W counts.

[3] Potential emissions VOC/HAP (tpy) = Emission factor (kg/hr/source) * Number of Sources * Weight % VOC/HAP x 2.2046 (lb/kg) x 8,760 (hr/yr) ÷ 2,000 (lb/ton)

[4] Potential emissions VOC/HAP (tpy) = Gas volume vented (scf/yr) * Molar weight of natural gas (lb/lb-mol) * Weight % VOC/HAP ÷ 100 ÷ 379 (scf/lb-mol) ÷ 2,000 (lb/ton)

Company Name: EQT Production, LLC
Facility Name: OXF156 Wellpad
Project Description: G70-B Application

Fugitive Emissions

Fugitive Specific HAP Emissions from Component Leaks

Equipment Type	Service	Emission Factors[1] (kg/hr/source)	Facility Equipment Count[2] (units)	TOC Annual Fugitive Emissions (tpy)	Benzene Emissions[3] (tpy)	Toluene Emissions[3] (tpy)	Ethylbenzene Emissions[3] (tpy)	Xylene Emissions[3] (tpy)	n-Hexane Emissions[4] (tpy)
Pumps	Light Liquid	0.01990	11	2.02	9.9E-05	4.1E-04	1.0E-04	7.7E-04	3.4E-03
Valves	Gas	0.00597	356	20.49	1.0E-03	4.1E-03	1.0E-03	0.01	0.03
Pressure Relief Valves	Gas	0.10400	25	24.60	1.2E-03	5.0E-03	1.2E-03	0.01	0.04
Open-Ended Lines	All	0.00170	26	0.42	2.0E-05	8.5E-05	2.1E-05	1.6E-04	7.1E-04
Connectors	All	0.00183	1,578	27.88	1.4E-03	0.01	1.4E-03	0.01	0.05
Compressor	All	0.22800	1	2.20	1.1E-04	4.5E-04	1.1E-04	8.4E-04	3.7E-03
Intermittent Pneumatic Devices[4]	Gas	13.5	30	—	1.5E-03	0.01	1.6E-03	0.01	0.05
			Emission Totals:	**75.42**	**0.01**	**0.02**	**0.01**	**0.04**	**0.19**

[1] U.S. EPA. Office of Air Quality Planning and Standards. *Protocol for Equipment Leak Emission Estimates*. Table 2-1. (Research Triangle Park, NC: U.S. EPA EPA-453/R-95-017, 1995). SOCMI factors were used as it was representative of natural gas liquids extraction. The pneumatic controller value is from 40 CFR 98 Subpart W, Table W-1A (scf/hr/component). Pneumatic assumes operation 1/3 of the year.

[2] Assumes one pump for each tank and one meter per wellhead. Pressure relief valves count includes one Emergency Pressure Relief valve and one lock-down hatch for each storage tank. Pneumatic devices assume 5 per well. A 50% compliance margin is added to the component counts based on Subpart W counts.

[3] Potential emissions HAP (tpy) = Emission factor (kg/hr/source) * Number of Sources * Weight % HAP x 2.2046 (lb/kg) x 8,760 (hr/yr) ÷ 2,000 (lb/ton)

[4] Potential emissions HAP (tpy) = Gas volume vented (scf/yr) * Molar weight of natural gas (lb/lb-mol) * Weight % HAP ÷ 100 ÷ 379 (scf/lb-mol) ÷ 2,000 (lb/ton)

GHG Fugitive Emissions from Component Leaks

Component	Component Count	GHG Emission Factor[1] (scf/hr/component)	CH_4 Emissions[2,3] (tpy)	CO_2 Emissions[2,3] (tpy)	CO_2e Emissions[4] (tpy)
Pumps	11	0.01	0.02	8.5E-05	0.39
Valves	356	0.027	1.43	0.01	35.76
Pressure Relief Devices	25	0.04	0.15	7.9E-04	3.65
Open-Ended Lines	26	0.061	0.23	1.3E-03	5.79
Connectors	1,578	0.003	0.71	3.8E-03	17.63
Compressor	1	4.17	0.62	3.4E-03	15.53
Intermittent Pneumatic Devices	30	6	8.94	0.05	223.51
Total			**12.09**	**0.07**	**302.27**

[1] Population emission factors for gas service in the Eastern U.S. from *Table W-1A of Subpart W - Default Whole Gas Emission Factors for Onshore Production* , 40 CFR 98, Subpart W (Table W-6 for compresors). Pneumatic assumes operation 1/3 of the year.

[2] Calculated in accordance with Equations W-32a, W-35 and W-36 in Subpart W of 40 CFR 98. See footnote 4 above for sample calculation.

[3] Potential emissions VOC/HAP (tpy) = Gas volume vented (scf/yr) * Molar weight of natural gas (lb/lb-mol) * Weight % VOC/HAP÷ 100 ÷ 379 (scf/lb-mol) ÷ 2,000 (lb/ton)
Mole fractions of CH_4 and CO_2 based on gas analysis:
CH_4: 80% CO_2: 0.16%

[4] Carbon equivalent emissions (CO_2e) are based on the following Global Warming Potentials (GWP) from 40 CFR Part 98, Table A-1:
Carbon Dioxide (CO_2): 1
Methane (CH_4): 25

Company Name: EQT Production, LLC
Facility Name: OXF156 Wellpad
Project Description: G70-B Application

Fugitive Emissions

Fugitive Emissions from Venting

Source	Volume (scf/yr)	VOC Emissions (tpy)	Benzene Emissions (tpy)	Toluene Emissions (tpy)	Ethylbenzene Emissions (tpy)	Xylene Emissions (tpy)	n-Hexane Emissions (tpy)	HAP Emissions (tpy)	CH_4 Emissions (tpy)	CO_2 Emissions (tpy)	CO_2e Emissions (tpy)
Miscellaneous Gas Venting	1,000,000	4.18	1.3E-03	0.01	1.3E-03	0.01	0.05	0.16	17.01	0.09	425.24
Total		**4.18**	**1.3E-03**	**0.01**	**1.3E-03**	**0.01**	**0.05**	**0.16**	**17.01**	**0.09**	**425.24**

[1] VOC and HAP emissions are based on sum of the fractions of the pollutants in the site-specific gas analysis in those classifications, and are calculated in accordance with standard conversion methodology and factors.
[2] CH_4 and CO_2 emissions are based on fractions of these pollutants in the site-specific gas analysis, and are calculated in accordance with Equations W-35 and W-36 in Subpart W of 40 CFR 98.
[3] GHG (CO_2e) is carbon dioxide equivalent, which is the summation of CO_2 (GWP = 1) + CH_4 (GWP = 25) + N_2O (GWP = 298).
[4] Total gas volume emitted (and thus subsequent emissions values) is estimated based on engineering judgement and is conservative.
[5] Total gas volume emitted includes blowdowns and other venting activities.
[6] Potential emissions VOC/HAP (tpy) = Gas volume vented (scf/yr) * Molar weight of natural gas (lb/lb-mol) * Weight % VOC/HAP÷ 100 ÷ 379 (scf/lb-mol) ÷ 2,000 (lb/ton)
[7] Potential emissions CH_4/CO_2 (tpy) = Gas volume vented (scf/yr) * Mole % CH_4/CO_2 ÷ 100 * Density CH_4/CO_2 (kg/scf) * 1,000 (g/kg) ÷ 453.6 (g/lb) ÷ 2,000 (lb/ton)

Company Name: EQT Production, LLC
Facility Name: OXF156 Wellpad
Project Description: G70-B Application

Haul Roads

Estimated Potential Road Fugitive Emissions

Unpaved Road Emissions

Unpaved Roads: $E\ (lb/VMT) = k(s/12)^a(W/3)^b)*[(365-p)/365]$

	PM	PM_{10}	$PM_{2.5}$	
k Factor (lb/VMT)	4.9	1.5	0.15	AP-42 Table 13.2.2-2 (Final, 11/06)
Silt content, s	4.8	%		AP-42 Table 13.2.2-1 (11/06), for Sand and Gravel Processing
Number of Rain Days, p	150			AP-42 Figure 13.2.1-2
a	0.7	0.9	0.9	AP-42 Table 13.2.2-2 (Final, 11/06)
b	0.45	0.45	0.45	AP-42 Table 13.2.2-2 (Final, 11/06)

Description	Weight of Empty Truck (tons)	Weight of Truck w/ Max Load (tons)	Mean Vehicle Weight (tons)	Length of Unpaved Road Traveled (mile)	Trips Per Year	Mileage Per Year	Control (%)	Emissions (tpy) PM	PM_{10}	$PM_{2.5}$
Liquids Hauling	20	40	30	0.64	5,925	7,631	0	16.34	4.17	0.42
Employee Vehicles	3	3	3	0.64	200	258	0	0.20	0.05	0.00
Total Potential Emissions								**16.54**	**4.22**	**0.42**

Company Name: EOT Production, LLC
Facility Name: OXF156 Wellpad
Project Description: G70-B Application

Gas Analysis

Sample Location: OXF 156 Gas Analysis - 513135
Sample Date: 8/26/2015
HHV (Btu/scf): 1,226 Note: A conservatively low BTU content of 1,050 was used for calculations

Constituent	Natural Gas Stream Speciation (Mole %)	Molecular Weight	Molar Weight	Average Weight Fraction	Natural Gas Stream Speciation (Wt. %)
Carbon Dioxide	0.159	44.01	0.07	0.00	0.346
Nitrogen	0.447	28.01	0.13	0.01	0.619
Methane	80.354	16.04	12.89	0.64	63.761
Ethane	13.176	30.07	3.96	0.20	19.601
Propane	3.623	44.10	1.60	0.08	7.904
Isobutane	0.493	58.12	0.29	0.01	1.418
n-Butane	0.905	58.12	0.53	0.03	2.602
Isopentane	0.232	72.15	0.17	0.01	0.826
n-Pentane	0.200	72.15	0.14	0.01	0.713
Cyclopentane	<0.001	70.1	0.0	0.0	0.000
n-Hexane	0.040	86.18	0.03	0.00	0.170
Cyclohexane	0.006	84.16	0.01	0.00	0.026
Other Hexanes	0.074	86.18	0.06	0.00	0.317
Heptanes	0.077	100.21	0.08	0.00	0.382
Methylcyclohexane	<0.001	98.19	0.00	0.00	0.000
2,2,4-Trimethylpentane	0.064	114.23	0.07	0.00	0.363
Benzene*	0.001	78.11	0.00	0.00	0.005
Toluene*	0.004	92.14	0.00	0.00	0.020
Ethylbenzene*	0.001	106.17	0.00	0.00	0.005
Xylenes*	0.007	106.16	0.01	0.00	0.038
C8 + Heavies	0.137	130.80	0.18	0.01	0.883
Totals	100.000		20.21	1.00	100

TOC (Total)	99.39	99.04
VOC (Total)	5.86	15.67
HAP (Total)	0.12	0.60

*Hexanes plus were speciated based on an 11/13/14 long-chain gas analysis from the SMI-27 wellpac

EQT Production
OXF-156

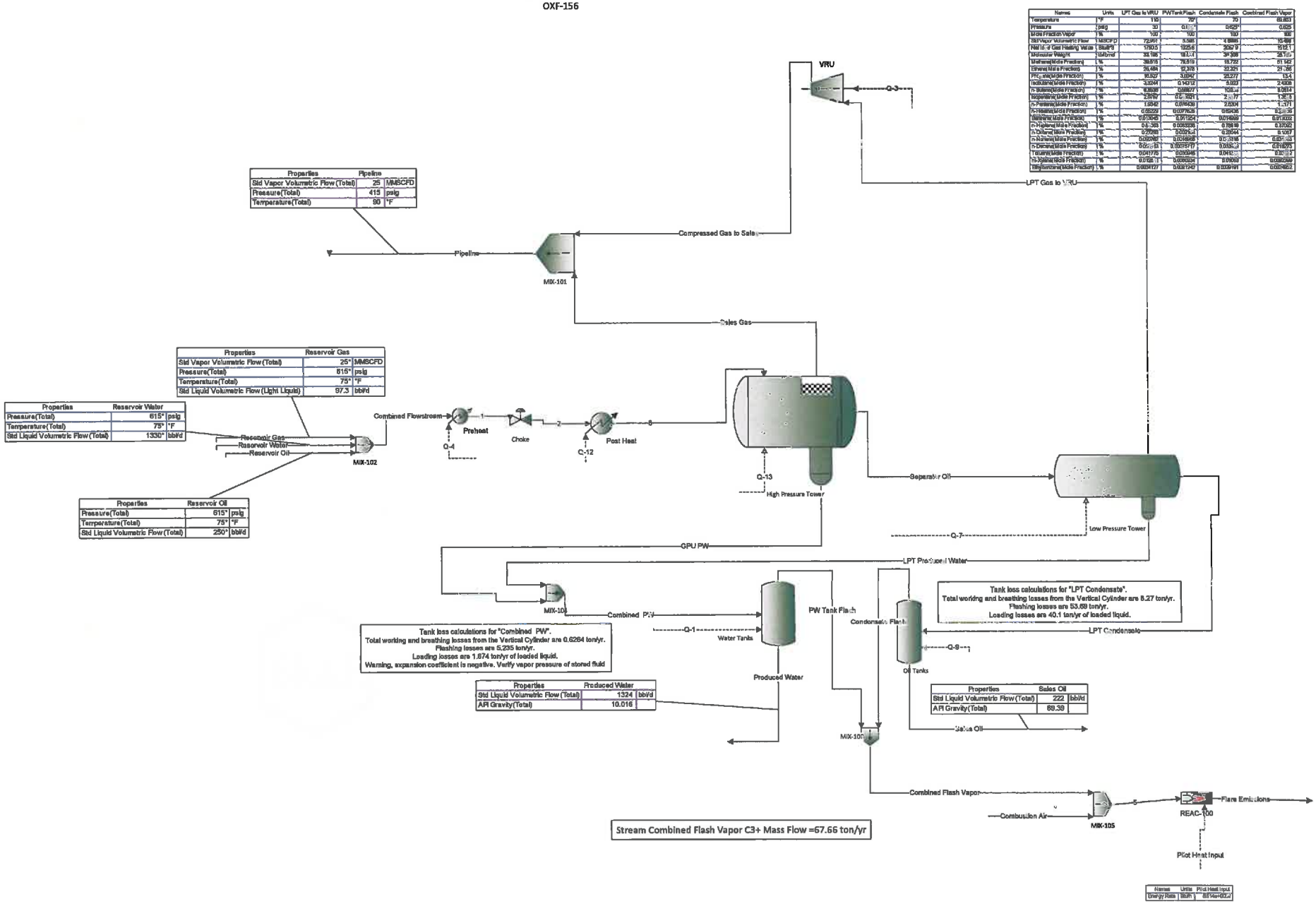

Properties	Pipeline	
Std Vapor Volumetric Flow (Total)	25	MMSCFD
Pressure(Total)	415	psig
Temperature(Total)	90	°F

Properties	Reservoir Gas	
Std Vapor Volumetric Flow (Total)	25*	MMSCFD
Pressure(Total)	615*	psig
Temperature(Total)	75*	°F
Std Liquid Volumetric Flow (Light Liquid)	97.3	bbl/d

Properties	Reservoir Water	
Pressure(Total)	615*	psig
Temperature(Total)	75*	°F
Std Liquid Volumetric Flow (Total)	1330*	bbl/d

Properties	Reservoir Oil	
Pressure(Total)	615*	psig
Temperature(Total)	75*	°F
Std Liquid Volumetric Flow (Total)	250*	bbl/d

Properties	Produced Water	
Std Liquid Volumetric Flow (Total)	1324	bbl/d
API Gravity(Total)	10.016	

Properties	Sales Oil	
Std Liquid Volumetric Flow (Total)	222	bbl/d
API Gravity(Total)	69.39	

Tank loss calculations for "Combined PW".
Total working and breathing losses from the Vertical Cylinder are 0.6264 ton/yr.
Flashing losses are 5.235 ton/yr.
Loading losses are 1.674 ton/yr of loaded liquid.
Warning, expansion coefficient is negative. Verify vapor pressure of stored fluid

Tank loss calculations for "LPT Condensate".
Total working and breathing losses from the Vertical Cylinder are 8.27 ton/yr.
Flashing losses are 53.69 ton/yr.
Loading losses are 40.1 ton/yr of loaded liquid.

Stream Combined Flash Vapor C3+ Mass Flow =67.66 ton/yr

Names	Units	LPT Gas to VRU	PW Tank Flash	Condensate Flash	Combined Flash Vapor
Temperature	°F	110	70*	70	69.893
Pressure	psig	30	0.125*	0.625*	0.625
Mole Fraction Vapor	%	100	100	100	100
Std Vapor Volumetric Flow	MMSCFD	72.901	5.585	4.8865	10.488
Net Ht. of Gas Heating Value	Btu/ft³	1,002.5	3,025.6	3,057.9	3,152.1
Molecular Weight	lb/lbmol	34.196	18.314	37.208	28.735
Methane(Mole Fraction)	%	38.918	78.519	18.722	51.142
Ethane(Mole Fraction)	%	26.484	12.378	22.231	21.165
H_2S (Mole Fraction)	%	0.327	0.004	0.277	0.14
Isobutane(Mole Fraction)	%	3.2241	0.14312	3.023	2.4308
n-Butane(Mole Fraction)	%	8.2639	0.08877	10.[illegible]	8.0814
Isopentane(Mole Fraction)	%	2.0767	0.0[illegible]2241	2.[illegible]	1.[illegible]
n-Pentane(Mole Fraction)	%	1.6542	0.07453	2.0304	1.371
n-Hexane(Mole Fraction)	%	0.6523	0.007628	0.85436	0.[illegible]
Benzene(Mole Fraction)	%	0.01[illegible]	0.01724	0.01[illegible]	0.013322
n-Heptane(Mole Fraction)	%	0.6[illegible]	0.003328	0.7[illegible]	0.37322
n-Octane(Mole Fraction)	%	0.2[illegible]	0.00216	0.3[illegible]	0.1267
n-Nonane(Mole Fraction)	%	0.0[illegible]	0.00[illegible]	0.0[illegible]	0.0[illegible]
n-Decane(Mole Fraction)	%	0.0[illegible]	0.00[illegible]	0.0[illegible]	0.01[illegible]
Toluene(Mole Fraction)	%	0.041[illegible]	0.0[illegible]	0.041[illegible]	0.0[illegible]
n-Xylene(Mole Fraction)	%	0.0[illegible]	0.00[illegible]	0.01[illegible]	0.00[illegible]
Ethylbenzene(Mole Fraction)	%	0.00[illegible]	0.00[illegible]	0.00[illegible]	0.00[illegible]

Names	Units	Pilot Heat Input
Energy Rate	Btu/h	[illegible]

OXF-156
Plant Schematic

Client Name:	EQT	Job: V1.0
Location:	OXF-156	
Flowsheet:	OXF-156	

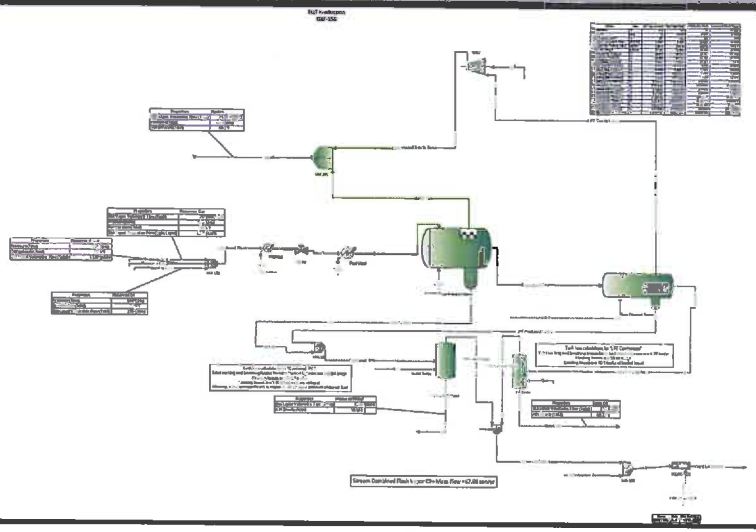

* User Specified Values
? Extrapolated or Approximate Values

ProMax 3.2.15289.0
Copyright © 2002-2015 BRE Group, Ltd.

Licensed to Trinity Consultants, Inc. and Affiliates

Process Streams Report
All Streams
Tabulated by Total Phase

Client Name:	EQT	Job: V1.0	
Location:	OXF-156		
Flowsheet:	OXF-156		

Connections

	Combined PW	Combined Flash Vapor	Pipeline	Produced Water	Reservoir Gas
From Block	MIX-104	MIX-100	MIX-101	Water Tanks	--
To Block	Water Tanks	MIX-105	--	--	MIX-102

Stream Composition

Mole Fraction	Combined PW	Combined Flash Vapor	Pipeline	Produced Water	Reservoir Gas
Nitrogen	1.42802E-06	0.00136515	0.0044488	3.14127E-08	0.00446792 *
Methane	0.000476408	0.511422	0.801472	2.08162E-05	0.804063 *
CO2	1.64608E-05	0.00857742	0.00158341	8.00883E-06	0.00158804 *
Ethane	7.47171E-05	0.216862	0.132043	3.79861E-06	0.13185 *
Propane	1.82667E-05	0.134001	0.0366943	1.05206E-06	0.0362517 *
Isobutane	8.38003E-07	0.0242079	0.00502494	1.79793E-08	0.00493523 *
n-Butane	3.60822E-06	0.0503143	0.00933944	1.77647E-07	0.00905692 *
Isopentane	5.03238E-07	0.0135581	0.00241003	1.61222E-08	0.00231652 *
n-Pentane	4.52097E-07	0.0121714	0.00217422	1.41489E-08	0.00199831 *
n-Hexane	4.50734E-08	0.00295564	0.000588472	5.98088E-10	0.000400262 *
Methylcyclopentane	0	0	0	0	0 *
Benzene	5.0914E-07	0.000130023	1.35338E-05	4.44913E-07	1.00065E-05 *
Cyclohexane	3.98848E-08	0.000212572	3.61305E-05	6.52557E-09	6.00393E-05 *
n-Heptane	4.84349E-08	0.0037092	0.000885071	7.4571E-10	0.000770504 *
n-Octane	1.24877E-08	0.00108705	0.00031284	1.23565E-10	0.000160105 *
n-Nonane	1.12174E-08	0.000319632	0.000107861	3.51728E-10	0.000470308 *
n-Decane	4.4436E-09	0.000162726	6.87664E-05	1.05448E-10	0.000740484 *
n-Undecane	0	0	0	0	0 *
Dodecane	0	0	0	0	0 *
Water	0.999405	0.0136183	0.00180806	0.999964	0 *
Triethylene Glycol	0	0	0	0	0 *
Oxygen	0	0	0	0	0 *
Argon	0	0	0	0	0 *
Carbon Monoxide	0	0	0	0	0 *
Cyclopentane	0	0	0	0	0 *
Isohexane	8.11799E-08	0.00484616	0.000926721	1.17164E-09	0.000740484 *
3-Methylpentane	0	0	0	0	0 *
Neohexane	0	0	0	0	0 *
2,3-Dimethylbutane	0	0	0	0	0 *
Methylcyclohexane	0	0	0	0	0 *
Isooctane	7.15997E-12	3.28761E-06	7.77595E-07	1.18137E-14	0 *
Decane, 2-Methyl-	0	0	0	0	0 *
Toluene	1.22103E-06	0.000358198	4.43968E-05	1.04432E-06	4.00262E-05 *
m-Xylene	3.18139E-07	9.2399E-05	1.41171E-05	2.72325E-07	7.00458E-05 *
Ethylbenzene	7.99366E-08	2.4952E-05	3.75459E-06	6.78051E-08	1.00065E-05 *

Mass Flow	Combined PW lb/h	Combined Flash Vapor lb/h	Pipeline lb/h	Produced Water lb/h	Reservoir Gas lb/h
Nitrogen	0.0429154	0.0440798	343.518	0.000943486	343.563 *
Methane	8.19903	9.45679	35440.5	0.358043	35407.5 *
CO2	0.777159	0.435107	192.08	0.377902	191.841 *
Ethane	2.41019	7.51616	10944	0.122464	10882.7 *
Propane	0.864109	6.81079	4460	0.0497394	4387.92 *
Isobutane	0.0522517	1.62178	805.033	0.00112041	787.379 *
n-Butane	0.224982	3.37075	1496.25	0.0110704	1444.97 *
Isopentane	0.0389507	1.12751	479.282	0.00124715	458.774 *
n-Pentane	0.0349924	1.01219	432.387	0.0010945	395.755 *
n-Hexane	0.00416693	0.293581	139.781	5.52602E-05	94.6808 *
Methylcyclopentane	0	0	0	0	0 *
Benzene	0.0426645	0.0117066	2.91392	0.0372611	2.14554 *
Cyclohexane	0.003601	0.0206206	8.38141	0.000588824	13.8699 *

* User Specified Values
? Extrapolated or Approximate Values

Copyright © 2002-2015 BRE Group, Ltd.
Licensed to Trinity Consultants, Inc. and Affiliates

Process Streams Report
All Streams
Tabulated by Total Phase

Client Name:	EQT	Job: V1.0
Location:	OXF-156	
Flowsheet:	OXF-156	

Mass Flow	Combined PW lb/h	Combined Flash Vapor lb/h	Pipeline lb/h	Produced Water lb/h	Reservoir Gas lb/h
n-Heptane	0.00520651	0.4284	244.453	8.01143E-05	211.927 *
n-Octane	0.00153028	0.143125	98.5003	1.51333E-05	50.2011 *
n-Nonane	0.00154341	0.0472518	38.1313	4.83666E-05	165.574 *
n-Decane	0.000678261	0.026687	26.9691	1.6086E-05	289.201 *
n-Undecane	0	0	0	0	0 *
Dodecane	0	0	0	0	0 *
Water	19315	0.282785	89.7832	19314.8	0 *
Triethylene Glycol	0	0	0	0	0 *
Oxygen	0	0	0	0	0 *
Argon	0	0	0	0	0 *
Carbon Monoxide	0	0	0	0	0 *
Cyclopentane	0	0	0	0	0 *
Isohexane	0.00750489	0.481365	220.127	0.000108253	175.159 *
3-Methylpentane	0	0	0	0	0 *
Neohexane	0	0	0	0	0 *
2,3-Dimethylbutane	0	0	0	0	0 *
Methylcyclohexane	0	0	0	0	0 *
Isooctane	8.77402E-07	0.000432861	0.244832	1.44685E-09	0 *
Decane, 2-Methyl-	0	0	0	0	0 *
Toluene	0.120692	0.0380414	11.2754	0.103166	10.1232 *
m-Xylene	0.0362336	0.0113069	4.13111	0.0309979	20.4126 *
Ethylbenzene	0.00910416	0.00305337	1.09871	0.00771805	2.91609 *

Volumetric Flow	Combined PW gpm	Combined Flash Vapor ft^3/h	Pipeline ft^3/h	Produced Water gpm	Reservoir Gas ft^3/h
Nitrogen	0.00011658	0.585595	174.899	2.51989E-06	119.222
Methane	0.0406735	218.517	29167.6	0.0017499	18852.2
CO2	0.00123213	3.65347	53.7353	0.000591117	32.8143
Ethane	0.00815161	91.9365	4057.98	0.000409368	2266.63
Propane	0.00249687	56.4432	964.315	0.000142262	445.517
Isobutane	0.000137968	10.1441	115.953	2.9304E-06	43.6076
n-Butane	0.000586468	21.051	201.926	2.8591E-05	65.4372
Isopentane	9.44863E-05	5.64244	43.4707	2.99882E-06	8.26252
n-Pentane	8.50411E-05	5.05995	37.8413	2.63688E-06	5.93037
n-Hexane	9.62176E-06	1.22009	7.64443	1.26543E-07	-0.122694
Methylcyclopentane	0	0	0	0	0
Benzene	8.01603E-05	0.0539603	0.211282	6.94895E-05	0.0145212
Cyclohexane	7.33058E-06	0.0879906	0.509259	1.1896E-06	0.0350905
n-Heptane	1.16283E-05	1.5214	7.52469	1.77492E-07	-1.09297
n-Octane	3.30943E-06	0.44294	1.45551	3.24706E-08	0.11186
n-Nonane	3.25845E-06	0.129269	0.0138985	1.01322E-07	1.71398
n-Decane	1.40916E-06	0.0653743	-0.269712	3.31644E-08	4.4649
n-Undecane	0	0	0	0	0
Dodecane	0	0	0	0	0
Water	38.7838	5.80819	62.9008	38.6677	0
Triethylene Glycol	0	0	0	0	0
Oxygen	0	0	0	0	0
Argon	0	0	0	0	0
Carbon Monoxide	0	0	0	0	0
Cyclopentane	0	0	0	0	0
Isohexane	1.73558E-05	2.00336	12.9848	2.4825E-07	0.214147
3-Methylpentane	0	0	0	0	0
Neohexane	0	0	0	0	0
2,3-Dimethylbutane	0	0	0	0	0
Methylcyclohexane	0	0	0	0	0
Isooctane	1.87831E-09	0.00134734	0.00661837	3.07248E-12	0
Decane, 2-Methyl-	0	0	0	0	0
Toluene	0.000224419	0.1476	0.491582	0.000190458	-0.00731251
m-Xylene	6.682E-05	0.0378217	0.100441	5.67624E-05	0.0967837

* User Specified Values
? Extrapolated or Approximate Values

Copyright © 2002-2015 BRE Group, Ltd.
Licensed to Trinity Consultants, Inc. and Affiliates

Process Streams Report
All Streams
Tabulated by Total Phase

Client Name:	EQT	Job: V1.0
Location:	OXF-156	
Flowsheet:	OXF-156	

Volumetric Flow	Combined PW gpm	Combined Flash Vapor ft^3/h	Pipeline ft^3/h	Produced Water gpm	Reservoir Gas ft^3/h
Ethylbenzene	1.66997E-05	0.0102231	0.0288107	1.40579E-05	0.0113961

Stream Properties

Property	Units	Combined PW	Combined Flash Vapor	Pipeline	Produced Water	Reservoir Gas
Temperature	°F	90	69.8033	90.4556	70	75 *
Pressure	psig	415	0.625	415	0.625	615 *
Mole Fraction Vapor		0	1	0.999987	0	0.995633
Mole Fraction Light Liquid		1	0	1.28171E-05	1	0.00436671
Mole Fraction Heavy Liquid		0	0	0	0	0
Molecular Weight	lb/lbmol	18.0166	28.7892	20.1273	18.0157	20.1594
Mass Density	lb/ft^3	62.0455	0.0781592	1.58913	62.2745	2.53314
Mass Flow	lb/h	19327.9	33.1835	55478.8	19315.9	55336.6
Vapor Volumetric Flow	ft^3/h	311.512	424.563	34911.4	310.173	21845.1
Liquid Volumetric Flow	gpm	38.8378	52.9326	4352.59	38.6709	2723.54
Std Vapor Volumetric Flow	MMSCFD	9.77053	0.0104978	25.1042	9.76493	25 *
Std Liquid Volumetric Flow	sgpm	38.6875	0.162309	329.961	38.6163	329.127
Specific Gravity		0.994813	0.994012		0.998484	
API Gravity		10.0608			10.0155	
Net Ideal Gas Heating Value	Btu/ft^3	0.623582	1512.06	1102.42	0.0360067	1105.76
Net Liquid Heating Value	Btu/lb	-1045.95	19812.8	20729.3	-1058.95	20760.8

Remarks

Copyright © 2002-2015 BRE Group, Ltd.
Licensed to Trinity Consultants, Inc. and Affiliates

Process Streams Report
All Streams
Tabulated by Total Phase

Client Name:	EQT	Job: V1.0
Location:	OXF-156	
Flowsheet:	OXF-156	

Connections

	Reservoir Oil	Sales Oil			
From Block	--	Oil Tanks			
To Block	MIX-102	--			

Stream Composition

Mole Fraction	Reservoir Oil	Sales Oil			
Nitrogen	0 *	2.14724E-07			
Methane	0.09367 *	0.0010128			
CO2	0.00085 *	2.33039E-05			
Ethane	0.08799 *	0.010973			
Propane	0.08693 *	0.0333864			
Isobutane	0.02414 *	0.0171321			
n-Butane	0.06926 *	0.0496797			
Isopentane	0.038 *	0.0375229			
n-Pentane	0.05141 *	0.0452515			
n-Hexane	0.04694 *	0.0389253			
Methylcyclopentane	0 *	0			
Benzene	0.00107 *	0.000960634			
Cyclohexane	0 *	0.00308585			
n-Heptane	0.12699 *	0.157379			
n-Octane	0.12844 *	0.154832			
n-Nonane	0.07177 *	0.144957			
n-Decane	0.11029 *	0.237789			
n-Undecane	0 *	0			
Dodecane	0 *	0			
Water	0 *	3.1728E-05			
Triethylene Glycol	0 *	0			
Oxygen	0 *	0			
Argon	0 *	0			
Carbon Monoxide	0 *	0			
Cyclopentane	0 *	0			
Isohexane	0.05178 *	0.0454889			
3-Methylpentane	0 *	0			
Neohexane	0 *	0			
2,3-Dimethylbutane	0 *	0			
Methylcyclohexane	0 *	0			
Isooctane	0.00017 *	0.000129602			
Decane, 2-Methyl-	0 *	0			
Toluene	0.0075 *	0.00955061			
m-Xylene	0.00177 *	0.00967721			
Ethylbenzene	0.00103 *	0.00221152			

Mass Flow	Reservoir Oil lb/h	Sales Oil lb/h			
Nitrogen	0 *	0.000126631			
Methane	43.0967 *	0.342049			
CO2	1.07285 *	0.0215908			
Ethane	75.8797 *	6.94605			
Propane	109.936 *	30.9926			
Isobutane	40.2395 *	20.9626			
n-Butane	115.451 *	60.7875			
Isopentane	78.6295 *	56.9926			
n-Pentane	106.377 *	68.7314			
n-Hexane	116.011 *	70.6169			
Methylcyclopentane	0 *	0			
Benzene	2.39703 *	1.57968			
Cyclohexane	0 *	5.46728			
n-Heptane	364.938 *	331.983			
n-Octane	420.773 *	372.331			
n-Nonane	263.992 *	391.387			

* User Specified Values
? Extrapolated or Approximate Values

Copyright © 2002-2015 BRE Group, Ltd.
Licensed to Trinity Consultants, Inc. and Affiliates

Process Streams Report
All Streams
Tabulated by Total Phase

Client Name:	EQT	Job: V1.0
Location:	OXF-156	
Flowsheet:	OXF-156	

Mass Flow	Reservoir Oil lb/h	Sales Oil lb/h
n-Decane	450.047 *	712.252
n-Undecane	0 *	0
Dodecane	0 *	0
Water	0 *	0.0120331
Triethylene Glycol	0 *	0
Oxygen	0 *	0
Argon	0 *	0
Carbon Monoxide	0 *	0
Cyclopentane	0 *	0
Isohexane	127.973 *	82.5243
3-Methylpentane	0 *	0
Neohexane	0 *	0
2,3-Dimethylbutane	0 *	0
Methylcyclohexane	0 *	0
Isooctane	0.556925 *	0.31166
Decane, 2-Methyl-	0 *	0
Toluene	19.8187 *	18.5253
m-Xylene	5.38924 *	21.6284
Ethylbenzene	3.13611 *	4.94271

Volumetric Flow	Reservoir Oil gpm	Sales Oil gpm
Nitrogen	0	3.93825E-07
Methane	0.284023	0.00194027
CO2	0.00164986	2.45696E-05
Ethane	0.331282	0.0278663
Propane	0.416118	0.112318
Isobutane	0.141522	0.0723196
n-Butane	0.393952	0.203506
Isopentane	0.251257	0.181395
n-Pentane	0.33741	0.216981
n-Hexane	0.348644	0.21316
Methylcyclopentane	0	0
Benzene	0.00531196	0.00350834
Cyclohexane	0	0.0139896
n-Heptane	1.05779	0.972804
n-Octane	1.17621	1.05661
n-Nonane	0.717766	1.0836
n-Decane	1.20121	1.94037
n-Undecane	0	0
Dodecane	0	0
Water	0	-1.84438E-05
Triethylene Glycol	0	0
Oxygen	0	0
Argon	0	0
Carbon Monoxide	0	0
Cyclopentane	0	0
Isohexane	0.388636	0.251852
3-Methylpentane	0	0
Neohexane	0	0
2,3-Dimethylbutane	0	0
Methylcyclohexane	0	0
Isooctane	0.00157674	0.000898294
Decane, 2-Methyl-	0	0
Toluene	0.0442523	0.0419242
m-Xylene	0.0120465	0.049279
Ethylbenzene	0.00698867	0.0112479

* User Specified Values
? Extrapolated or Approximate Values

Copyright © 2002-2015 BRE Group, Ltd.

Licensed to Trinity Consultants, Inc. and Affiliates

Process Streams Report
All Streams
Tabulated by Total Phase

Client Name:	EQT	Job: V1.0
Location:	OXF-156	
Flowsheet:	OXF-156	

Stream Properties

Property	Units	Reservoir Oil	Sales Oil			
Temperature	°F	75 *	70 *			
Pressure	psig	615 *	0.625			
Mole Fraction Vapor		0	0			
Mole Fraction Light Liquid		1	1			
Mole Fraction Heavy Liquid		0	0			
Molecular Weight	lb/lbmol	81.7903	107.322			
Mass Density	lb/ft^3	41.0884	43.6342			
Mass Flow	lb/h	2345.71	2259.34			
Vapor Volumetric Flow	ft^3/h	57.0895	51.7791			
Liquid Volumetric Flow	gpm	7.11765	6.45558			
Std Vapor Volumetric Flow	MMSCFD	0.261203	0.191734			
Std Liquid Volumetric Flow	sgpm	7.29167 *	6.4707			
Specific Gravity		0.658795	0.699613			
API Gravity		80.6788	69.3943			
Net Ideal Gas Heating Value	Btu/ft^3	4177.13	5442.67			
Net Liquid Heating Value	Btu/lb	19225.3	19086.5			

Remarks

* User Specified Values
? Extrapolated or Approximate Values

Copyright © 2002-2015 BRE Group, Ltd.

Licensed to Trinity Consultants, Inc. and Affiliates

Energy Stream Report

Client Name:	EQT	Job: V1.0
Location:	OXF-156	
Flowsheet:	OXF-156	

Energy Streams

Energy Stream	Energy Rate	Power	From Block	To Block
Pilot Heat Input	661387 * Btu/h	259.935 * hp	–	REAC-100

Remarks

ProMax 3.2.15289.0
Copyright © 2002-2015 BRE Group, Ltd.

Licensed to Trinity Consultants, Inc. and Affiliates

20151203_EQT_OXF 156 with LPT.pmx
Project Warnings Report

Client Name:	EQT	Job: V1.0
Location:	OXF-156	

ProMax:ProMax!Project!Flowsheets!OXF-156!Blocks!VRU
Warning: The change in entropy is negative.

User Value Sets Report

Client Name:	EQT	Job: V1.0
Location:	OXF-156	

Tank Losses.53

User Value [ShellLength]

* Parameter	20	ft	Upper Bound	ft
* Lower Bound	0	ft	* Enforce Bounds	False

User Value [ShellDiam]

* Parameter	12	ft	Upper Bound	ft
* Lower Bound	0	ft	* Enforce Bounds	False

User Value [BreatherVP]

* Parameter	0.875	psig	Upper Bound	psig
Lower Bound		psig	* Enforce Bounds	False

User Value [BreatherVacP]

* Parameter	-0.0375	psig	Upper Bound	psig
Lower Bound		psig	* Enforce Bounds	False

User Value [DomeRadius]

Parameter		ft	Upper Bound	ft
Lower Bound		ft	* Enforce Bounds	False

User Value [OpPress]

* Parameter	0	psig	Upper Bound	psig
Lower Bound		psig	* Enforce Bounds	False

User Value [AvgPercentLiq]

* Parameter	50	%	Upper Bound	%
Lower Bound		%	* Enforce Bounds	False

User Value [MaxPercentLiq]

* Parameter	90	%	Upper Bound	%
Lower Bound		%	* Enforce Bounds	False

User Value [AnnNetTP]

* Parameter	218.527	bbl/day	Upper Bound	bbl/day
* Lower Bound	0	bbl/day	* Enforce Bounds	False

User Value [OREff]

* Parameter	0	%	Upper Bound	%
Lower Bound		%	* Enforce Bounds	False

User Value [AtmPressure]

* Parameter	14.2535	psia	Upper Bound	psia
Lower Bound		psia	* Enforce Bounds	False

Copyright © 2002-2015 BRE Group, Ltd.
Licensed to Trinity Consultants, Inc. and Affiliates

User Value Sets Report

Client Name:	EQT	Job: V1.0	
Location:	OXF-156		

User Value [MaxLiqSurfaceT]

* Parameter	61.4758	°F	Upper Bound	°F
Lower Bound		°F	* Enforce Bounds	False

User Value [TotalLosses]

* Parameter	8.27018	ton/yr	Upper Bound	ton/yr
Lower Bound		ton/yr	* Enforce Bounds	False

User Value [WorkingLosses]

* Parameter	2.55299	ton/yr	Upper Bound	ton/yr
Lower Bound		ton/yr	* Enforce Bounds	False

User Value [StandingLosses]

* Parameter	0.203733	ton/yr	Upper Bound	ton/yr
Lower Bound		ton/yr	* Enforce Bounds	False

User Value [RimSealLosses]

* Parameter	0	ton/yr	Upper Bound	ton/yr
Lower Bound		ton/yr	* Enforce Bounds	False

User Value [WithdrawalLoss]

* Parameter	0	ton/yr	Upper Bound	ton/yr
Lower Bound		ton/yr	* Enforce Bounds	False

User Value [LoadingLosses]

* Parameter	40.1009	ton/yr	Upper Bound	ton/yr
Lower Bound		ton/yr	* Enforce Bounds	False

User Value [DeckFittingLosses]

* Parameter	0	ton/yr	Upper Bound	ton/yr
Lower Bound		ton/yr	* Enforce Bounds	False

User Value [DeckSeamLosses]

* Parameter	0	ton/yr	Upper Bound	ton/yr
Lower Bound		ton/yr	* Enforce Bounds	False

User Value [FlashingLosses]

* Parameter	53.6922	ton/yr	Upper Bound	ton/yr
Lower Bound		ton/yr	* Enforce Bounds	False

User Value [GasMoleWeight]

* Parameter	0.0532411	kg/mol	Upper Bound	kg/mol
Lower Bound		kg/mol	* Enforce Bounds	False

Remarks
This User Value Set was programmatically generated. GUID={5524AB8C-40B1-4354-9DD7-EED65770BF87}

Tank Losses.331

User Value [ShellLength]

* Parameter	20	ft	Upper Bound	ft
* Lower Bound	0	ft	* Enforce Bounds	False

ProMax 3.2.15289.0
Copyright © 2002-2015 BRE Group, Ltd.
Licensed to Trinity Consultants, Inc. and Affiliates

User Value Sets Report

Client Name:	EQT	Job:	V1.0
Location:	OXF-156		

User Value [ShellDiam]

* Parameter	12	ft	Upper Bound	ft
* Lower Bound	0	ft	* Enforce Bounds	False

User Value [BreatherVP]

* Parameter	0.875	psig	Upper Bound	psig
Lower Bound		psig	* Enforce Bounds	False

User Value [BreatherVacP]

* Parameter	-0.0375	psig	Upper Bound	psig
Lower Bound		psig	* Enforce Bounds	False

User Value [DomeRadius]

Parameter		ft	Upper Bound	ft
Lower Bound		ft	* Enforce Bounds	False

User Value [OpPress]

* Parameter	0	psig	Upper Bound	psig
Lower Bound		psig	* Enforce Bounds	False

User Value [AvgPercentLiq]

* Parameter	50	%	Upper Bound	%
Lower Bound		%	* Enforce Bounds	False

User Value [MaxPercentLiq]

* Parameter	90	%	Upper Bound	%
Lower Bound		%	* Enforce Bounds	False

User Value [AnnNetTP]

* Parameter	1.94709	bbl/day	Upper Bound	bbl/day
* Lower Bound	0	bbl/day	* Enforce Bounds	False

User Value [OREff]

* Parameter	0	%	Upper Bound	%
Lower Bound		%	* Enforce Bounds	False

User Value [AtmPressure]

* Parameter	14.2535	psia	Upper Bound	psia
Lower Bound		psia	* Enforce Bounds	False

User Value [MaxLiqSurfaceT]

* Parameter	61.4758	°F	Upper Bound	°F
Lower Bound		°F	* Enforce Bounds	False

User Value [TotalLosses]

* Parameter	0.626388	ton/yr	Upper Bound	ton/yr
Lower Bound		ton/yr	* Enforce Bounds	False

User Value [WorkingLosses]

* Parameter	0.208796	ton/yr	Upper Bound	ton/yr
Lower Bound		ton/yr	* Enforce Bounds	False

User Value [StandingLosses]

* Parameter	0	ton/yr	Upper Bound	ton/yr
Lower Bound		ton/yr	* Enforce Bounds	False

ProMax 3.2.15289.0
Copyright © 2002-2015 BRE Group, Ltd.
Licensed to Trinity Consultants, Inc. and Affiliates

User Value Sets Report

Client Name:	EQT	Job:	V1.0
Location:	OXF-156		

User Value [RimSealLosses]

* Parameter	0 ton/yr	Upper Bound	ton/yr
Lower Bound	ton/yr	* Enforce Bounds	False

User Value [WithdrawalLoss]

* Parameter	0 ton/yr	Upper Bound	ton/yr
Lower Bound	ton/yr	* Enforce Bounds	False

User Value [LoadingLosses]

* Parameter	1.67387 ton/yr	Upper Bound	ton/yr
Lower Bound	ton/yr	* Enforce Bounds	False

User Value [DeckFittingLosses]

* Parameter	0 ton/yr	Upper Bound	ton/yr
Lower Bound	ton/yr	* Enforce Bounds	False

User Value [DeckSeamLosses]

* Parameter	0 ton/yr	Upper Bound	ton/yr
Lower Bound	ton/yr	* Enforce Bounds	False

User Value [FlashingLosses]

* Parameter	5.23497 ton/yr	Upper Bound	ton/yr
Lower Bound	ton/yr	* Enforce Bounds	False

User Value [GasMoleWeight]

* Parameter	0.0450167 kg/mol	Upper Bound	kg/mol
Lower Bound	kg/mol	* Enforce Bounds	False

Remarks

This User Value Set was programmatically generated. GUID={23417019-6BCF-4B6A-8C2C-C51E3F9510A8}

ProMax 3.2.15289.0
Copyright © 2002-2015 BRE Group, Ltd.

Licensed to Trinity Consultants, Inc. and Affiliates

```
*****************************************************************************
******
*     Project Setup Information
    *
*****************************************************************************
******
Project File                : \\tsclient\Z\Client\EQT Corporation\West Virginia\WV
Wells\153901.0056 WV Wells 2015\OXF 156\03 Draft\20151008 G70-B Application\Att S
Emission Calcs\01 E&P TANK\20160119_EQT_OXF-156_Sand Separator Tank.ept
Flowsheet Selection         : Oil Tank with Separator
Calculation Method          : RVP Distillation
Control Efficiency          : 100.0%
Known Separator Stream      : Low Pressure Oil
Entering Air Composition    : No

Filed Name                  : OXF-156 Wellpad
Well Name                   : Sand Separator Tank
Date                        : 2016.01.19


*****************************************************************************
******
*     Data Input
    *
*****************************************************************************
******

Separator Pressure          : 415.00[psig]
Separator Temperature       : 60.00[F]
Ambient Pressure            : 14.70[psia]
Ambient Temperature         : 55.00[F]
C10+ SG                     : 0.7855
C10+ MW                     : 165.827

-- Low Pressure Oil
-----------------------------------------------------------------------
```

No.	Component	mol %
1	H2S	0.0000
2	O2	0.0000
3	CO2	0.0850
4	N2	0.0000
5	C1	9.3670
6	C2	8.7990
7	C3	8.6930
8	i-C4	2.4140
9	n-C4	6.9260
10	i-C5	3.8000
11	n-C5	5.1410
12	C6	5.1780
13	C7	12.6990
14	C8	12.8440
15	C9	7.1770
16	C10+	11.0290
17	Benzene	0.1070
18	Toluene	0.7500
19	E-Benzene	0.1030
20	Xylenes	0.1770
21	n-C6	4.6940
22	224Trimethylp	0.0170

```
-- Sales Oil
-----------------------------------------------------------------------
```

Production Rate : 0.1[bbl/day]
Days of Annual Operation : 365 [days/year]
API Gravity : 59.11
Reid Vapor Pressure : 10.60[psia]

****
******
* Calculation Results
*
****
******

-- Emission Summary

Item	Uncontrolled [ton/yr]	Uncontrolled [lb/hr]
Total HAPs	0.010	0.002
Total HC	0.649	0.148
VOCs, C2+	0.554	0.126
VOCs, C3+	0.389	0.089

Page 1---------- E&P TANK

Uncontrolled Recovery Info.

Vapor	39.4400 x1E-3	[MSCFD]
HC Vapor	39.3200 x1E-3	[MSCFD]
GOR	394.40	[SCF/bbl]

-- Emission Composition

No	Component	Uncontrolled [ton/yr]	Uncontrolled [lb/hr]
1	H2S	0.000	0.000
2	O2	0.000	0.000
3	CO2	0.002	0.000
4	N2	0.000	0.000
5	C1	0.094	0.021
6	C2	0.166	0.038
7	C3	0.207	0.047
8	i-C4	0.038	0.009
9	n-C4	0.079	0.018
10	i-C5	0.021	0.005
11	n-C5	0.021	0.005
12	C6	0.008	0.002
13	C7	0.006	0.001
14	C8	0.002	0.000
15	C9	0.000	0.000
16	C10+	0.000	0.000
17	Benzene	0.000	0.000
18	Toluene	0.000	0.000
19	E-Benzene	0.000	0.000
20	Xylenes	0.000	0.000
21	n-C6	0.005	0.001
22	224Trimethylp	0.000	0.000
	Total	0.649	0.148

-- Stream Data

No.	Component	MW	LP Oil	Flash Oil	Sale Oil	Flash Gas	W&S Gas
Total Emissions			mol %	mol %	mol %	mol %	mol %

mol %						
1 H2S	34.80	0.0000	0.0000	0.0000	0.0000	0.0000
0.0000						
2 O2	32.00	0.0000	0.0000	0.0000	0.0000	0.0000
0.0000						
3 CO2	44.01	0.0850	0.0072	0.0000	0.3108	0.1154
0.2809						
4 N2	28.01	0.0000	0.0000	0.0000	0.0000	0.0000
0.0000						
5 C1	16.04	9.3670	0.2506	0.0000	35.8086	4.0357
30.9589						
6 C2	30.07	8.7990	1.5832	0.0081	29.7282	25.3693
29.0628						
7 C3	44.10	8.6930	4.7199	1.7572	20.2167	49.4619
24.6807						
8 i-C4	58.12	2.4140	2.1615	1.9559	3.1463	5.2672
3.4700						
9 n-C4	58.12	6.9260	7.0091	6.8096	6.6850	10.0215
7.1943						
10 i-C5	72.15	3.8000	4.6007	4.7718	1.4776	2.0172
1.5600						
11 n-C5	72.15	5.1410	6.4217	6.7173	1.4263	1.9588
1.5075						
12 C6	86.16	5.1780	6.8057	7.2135	0.4569	0.6468
0.4859						
13 C7	100.20	12.6990	16.9677	18.0599	0.3177	0.4740
0.3416						
14 C8	114.23	12.8440	17.2430	18.3759	0.0848	0.1344
0.0923						
15 C9	128.28	7.1770	9.6467	10.2838	0.0137	0.0248
0.0154						
16 C10+	165.83	11.0290	14.8312	15.8132	0.0009	0.0019
0.0010						
17 Benzene	78.11	0.1070	0.1416	0.1504	0.0066	0.0095
0.0070						
18 Toluene	92.13	0.7500	1.0049	1.0703	0.0108	0.0166
0.0116						
19 E-Benzene	106.17	0.1030	0.1384	0.1475	0.0004	0.0007
0.0005						
20 Xylenes	106.17	0.1770	0.2378	0.2535	0.0006	0.0010
0.0007						
21 n-C6	86.18	4.6940	6.2062	6.5878	0.3079	0.4429
0.3285						
22 224Trimethylp	114.24	0.0170	0.0227	0.0242	0.0003	0.0005
0.0004						
MW		83.10	100.49	104.27	32.63	43.49
34.29						
Stream Mole Ratio		1.0000	0.7436	0.6974	0.2564	0.0462
0.3026						
Heating Value	[BTU/SCF]				1893.78	2480.83
1983.38						
Gas Gravity	[Gas/Air]				1.13	1.50
1.18						
Bubble Pt. @ 100F	[psia]	364.11	33.27	11.57		
RVP @ 100F	[psia]	108.77	21.09	10.55		

Page 2---------- E&P TANK

Spec. Gravity @ 100F	0.642	0.673	0.678

Certificate of Analysis

Number: 2030-15020219-001A

Carencro Laboratory
4790 NE Evangeline Thruway
Carencro, LA 70520

Gary Vermillion
Gas Analytical Services
PO Box 1028
Bridgeport, WV 26330

Mar. 03, 2015

Field:	EQT	Sampled By:	RM-GAS
Station Name:	Oxford 156 Pad-513142	Sample Of:	Condensate Spot
Station Number:		Sample Date:	02/14/2015
Sample Point:	Sub-meter	Sample Conditions:	415 psig
Analyzed:	03/02/2015 07:39:36 by GR	Method:	GPA-2186M/GPA-2103
		Cylinder No:	GAS

Analytical Data

Components	Mol. %	MW	Wt. %	Sp. Gravity	L.V. %
Nitrogen	NIL	28.013	NIL	0.807	NIL
Methane	9.367	16.043	1.806	0.300	3.977
Carbon Dioxide	0.085	44.010	0.045	0.817	0.036
Ethane	8.799	30.069	3.179	0.356	5.896
Propane	8.693	44.096	4.606	0.507	6.000
Iso-Butane	2.414	58.122	1.686	0.563	1.979
n-Butane	6.926	58.122	4.837	0.584	5.471
Iso-Pentane	3.800	72.149	3.294	0.625	3.481
n-Pentane	5.141	72.149	4.457	0.631	4.669
i-Hexanes	5.178	85.344	5.311	0.666	5.268
n-Hexane	4.694	86.175	4.860	0.664	4.836
2,2,4-Trimethylpentane	0.017	114.231	0.024	0.697	0.023
Benzene	0.107	78.114	0.100	0.885	0.075
Heptanes	12.699	97.911	14.938	0.702	14.066
Toluene	0.750	92.141	0.830	0.872	0.629
Octanes	12.844	109.754	16.936	0.732	15.286
Ethylbenzene	0.103	106.167	0.131	0.872	0.099
Xylenes	0.177	106.167	0.227	0.885	0.169
Nonanes	7.177	124.778	10.757	0.744	9.549
Decanes Plus	11.029	165.827	21.976	0.786	18.491
	100.000		100.000		100.000

Physical Properties	Total	C10+
Specific Gravity at 60°F	0.6607	0.7855
API Gravity at 60°F	82.660	48.640
Molecular Weight	83.226	165.827
Pounds per Gallon (in Vacuum)	5.508	6.549
Pounds per Gallon (in Air)	5.502	6.542
Cu. Ft. Vapor per Gallon @ 14.73 psia	25.059	14.952

Patti L. Piero

Hydrocarbon Laboratory Manager

Quality Assurance: The above analyses are performed in accordance with ASTM, UOP, GPA guidelines for quality assurance, unless otherwise stated.

Certificate of Analysis

Number: 2030-15020219-001A

Carencro Laboratory
4790 NE Evangeline Thruway
Carencro, LA 70520

Gary Vermillion
Gas Analytical Services
PO Box 1028
Bridgeport, WV 26330

Mar. 03, 2015

Field:	EQT	Sampled By:	RM-GAS
Station Name:	Oxford 156 Pad-513142	Sample Of:	Condensate Spot
Station Number:		Sample Date:	02/14/2015
Sample Point:	Sub-meter	Sample Conditions:	415 psig
Analyzed:	03/02/2015 07:39:36 by GR	Method:	GPA-2186M/GPA-2103
		Cylinder No:	GAS

Analytical Data

Components	Mol. %	MW	Wt. %	Sp. Gravity	L.V. %
Nitrogen	NIL	28.013	NIL	0.807	NIL
Carbon Dioxide	0.085	44.010	0.045	0.817	0.036
Methane	9.367	16.043	1.806	0.300	3.977
Ethane	8.799	30.069	3.179	0.356	5.896
Propane	8.693	44.096	4.606	0.507	6.000
Iso-butane	2.414	58.122	1.686	0.563	1.979
n-Butane	6.926	58.122	4.837	0.584	5.471
Iso-pentane	3.800	72.149	3.294	0.625	3.481
n-Pentane	5.141	72.149	4.457	0.631	4.669
Hexanes	9.872	85.739	10.171	0.665	10.104
Heptanes Plus	44.903	122.188	65.919	0.746	58.387
	100.000		100.000		100.000

Physical Properties	Total	C7+
Specific Gravity at 60°F	0.6607	0.7462
API Gravity at 60°F	82.660	58.125
Molecular Weight	83.226	122.188
Pounds per Gallon (in Vacuum)	5.508	6.221
Pounds per Gallon (in Air)	5.502	6.214
Cu. Ft. Vapor per Gallon @ 14.73 psia	25.059	19.277

Patti L. Petro

Hydrocarbon Laboratory Manager

Quality Assurance: The above analyses are performed in accordance with ASTM, UOP, GPA guidelines for quality assurance, unless otherwise stated.

Certificate of Analysis

Number: 2030-15020219-001A

Carencro Laboratory
4790 NE Evangeline Thruway
Carencro, LA 70520

Gary Vermillion
Gas Analytical Services
PO Box 1028
Bridgeport, WV 26330

Mar. 03, 2015

Field: EQT
Station Name: Oxford 156 Pad-513142
Station Number:
Sample Point: Sub-meter

Sampled By: RM-GAS
Sample Of: Condensate Spot
Sample Date: 02/14/2015
Sample Conditions: 415 psig
Cylinder No: GAS

Analytical Data

Test	Method	Result	Units	Detection Limit	Lab Tech.	Analysis Date
Color Visual	Proprietary	Straw			CM	02/27/2015
API Gravity @ 60° F	ASTM D-5002	66.89	°		CM	02/27/2015
Specific Gravity @ 60/60° F	ASTM D-5002	0.7132			CM	02/27/2015
Density @ 60° F	ASTM D-5002	0.7125	g/ml		CM	02/27/2015
Shrinkage Factor	Proprietary	0.8203			CM	02/27/2015
Flash Factor	Proprietary	332.9579	Cu. Ft./S.T. Bbl		CM	02/27/2015

Patti L. Perro

Hydrocarbon Laboratory Manager

Quality Assurance: The above analyses are performed in accordance with ASTM, UOP, GPA guidelines for quality assurance, unless otherwise stated.

C6+ Gas Analysis Report

Gas Analytical

Report Date: Aug 31, 2015 7:16a

Client:	Equitable Production	Date Sampled:	Aug 26, 2015 2:00p
Site:	513139	Analysis Date:	Aug 28, 2015 10:02a
Field No:	9998	Collected By:	Dave Hitt
Meter:	513139	Date Effective:	Aug 26, 2015 12:00a
Source Laboratory	Clarksburg (Bridgeport), WV	Sample Pressure (PSI):	230.0
Lab File No:	**X_CH1-5781.CHR**	Sample Temp (°F):	58
Sample Type:	Spot	Field H2O:	No Test
Reviewed By:		Field H2S:	No Test

Component	Mol %	Gal/MSCF
Methane	80.3537	
Ethane	13.1764	3.50
Propane	3.6228	1.00
I-Butane	0.4932	0.16
N-Butane	0.9051	0.28
I-Pentane	0.2315	0.08
N-Pentane	0.1997	0.07
Nitrogen	0.4465	
Oxygen	<MDL	
Carbon Dioxide	0.1587	
Hexanes+	0.4124	0.17
TOTAL	100.0000	5.27

Analytical Results at Base Conditions (Real)	
BTU/SCF (Dry):	1,226.3556 BTU/ft³
BTU/SCF (Saturated):	1,205.8893 BTU/ft³
PSIA:	14.730 PSI
Temperature (°F):	60.00 °F
Z Factor (Dry):	0.99670
Z Factor (Saturated):	0.99630

Analytical Results at Contract Conditions (Real)	
BTU/SCF (Dry):	1,226.3556 BTU/ft³
BTU/SCF (Saturated):	1,205.8893 BTU/ft³
PSIA:	14.730 PSI
Temperature (°F):	60.00 °F
Z Factor (Dry):	0.99670
Z Factor (Saturated):	0.99630

Calculated Specific Gravities			
Ideal Gravity:	0.6958	Real Gravity:	0.6979
Molecular Wt:	20.1533 lb/lbmol		

Gross Heating Values are Based on:
GPA 2145-09, 2186
Compressibility is Calculated using AGA-8.

Source	Date	Notes
Gas Analytical	Aug 28, 2015	email bob gum

<MDL = Less than Method Detection Limits, NG = Not Given, NT = Not Tested

ATTACHMENT T

Emission Summary Sheet

ATTACHMENT T – FACILITY-WIDE CONTROLLED EMISSIONS SUMMARY SHEET

List all sources of emissions in this table. Use extra pages if necessary.

Emission Point ID# (Emission Source ID)	NO_x		CO		VOC		SO_2		PM_{10}		$PM_{2.5}$		GHG (CO_2e)	
	lb/hr	tpy	lb/hr	tpy	lb/hr	tpy	lb/hr	tpy	lb/hr	tpy	lb/hr	tpy	lb/hr	tpy
C001 (S001-S006, S018, C001)	1.15	5.03	0.96	4.22	1.28	0.97	0.01	0.03	0.09	0.38	0.09	0.38	1,373.47	6,015.79
C002 (S001-S006, S018, C002)	1.15	5.03	0.96	4.22	1.28	0.97	0.01	0.03	0.09	0.38	0.09	0.38	1,373.47	6,015.79
E007 (S007)	0.15	0.64	0.12	0.54	0.01	0.04	8.8E-04	3.9E-03	0.01	0.05	0.01	0.05	180.18	789.20
E008 (S008)	0.15	0.64	0.12	0.54	0.01	0.04	8.8E-04	3.9E-03	0.01	0.05	0.01	0.05	180.18	789.20
E009 (S009)	0.15	0.64	0.12	0.54	0.01	0.04	8.8E-04	3.9E-03	0.01	0.05	0.01	0.05	180.18	789.20
E010 (S010)	0.15	0.64	0.12	0.54	0.01	0.04	8.8E-04	3.9E-03	0.01	0.05	0.01	0.05	180.18	789.20
E011 (S011)	0.15	0.64	0.12	0.54	0.01	0.04	8.8E-04	3.9E-03	0.01	0.05	0.01	0.05	180.18	789.20
E012 (S012)	0.15	0.64	0.12	0.54	0.01	0.04	8.8E-04	3.9E-03	0.01	0.05	0.01	0.05	180.18	789.20
E013 (S013)	1.2E-03	5.4E-03	1.0E-03	4.5E-03	6.8E-05	3.0E-04	7.4E-06	3.2E-05	9.4E-05	4.1E-04	9.4E-05	4.1E-04	1.52	6.64
E014 (S014)	1.2E-03	5.4E-03	1.0E-03	4.5E-03	6.8E-05	3.0E-04	7.4E-06	3.2E-05	9.4E-05	4.1E-04	9.4E-05	4.1E-04	1.52	6.64
E015 (S015)	0.11	0.48	0.09	0.40	0.01	0.03	6.6E-04	2.9E-03	0.01	0.04	0.01	0.04	135.14	591.90
E016 (S016)	---	---	---	---	0.09	0.39	---	---	---	---	---	---	0.53	2.35
E017 (S017)	0.24	1.06	0.49	2.12	0.19	0.81	0.00	0.00	0.01	0.07	0.01	0.07	90.18	394.99
E018 (S018)	---	---	---	---	48.20	12.53	---	---	---	---	---	---	---	---
Fugitives	---	---	---	---	---	22.99	---	---	---	---	---	---	---	727.51
Haul Roads	---	---	---	---	---	---	---	---	---	4.22	---	0.42	---	---
Facility Total	3.53	15.46	3.25	14.22	51.09	38.91	0.02	0.09	0.26	5.37	0.26	1.58	4,056.90	18,496.79
Facility Total (excl. fugitives)	3.53	15.46	3.25	14.22	2.89	3.38	0.02	0.09	0.26	1.16	0.26	1.16	4,056.90	17,769.28

Annual emissions shall be based on 8,760 hours per year of operation for all emission units except emergency generators.
According to 45CSR14 Section 2.43.e, fugitive emissions are not included in the major source determination because it is not listed as one of the source categories in Table 1. Therefore, fugitive emissions shall not be included in the PTE above.

ATTACHMENT T – FACILITY-WIDE HAP CONTROLLED EMISSIONS SUMMARY SHEET

List all sources of emissions in this table. Use extra pages if necessary.

Emission Point ID#	Formaldehyde		Benzene		Toluene		Ethylbenzene		Xylenes		Hexane		Total HAPs	
	lb/hr	tpy	lb/hr	tpy	lb/hr	tpy	lb/hr	tpy	lb/hr	tpy	lb/hr	tpy	lb/hr	tpy
C001 (S001-S006, S018, C001)	---	---	6.8E-04	6.4E-04	1.4E-03	1.7E-03	1.0E-04	1.3E-04	3.6E-04	4.8E-04	0.02	0.02	0.02	0.02
C002 (S001-S006, S018, C002)	---	---	6.8E-04	6.4E-04	1.4E-03	1.7E-03	1.0E-04	1.3E-04	3.6E-04	4.8E-04	0.02	0.02	0.02	0.02
E007 (S007)	1.1E-04	4.8E-04	3.1E-06	1.3E-05	5.0E-06	2.2E-05	---	---	---	---	2.6E-03	0.01	2.8E-03	0.01
E008 (S008)	1.1E-04	4.8E-04	3.1E-06	1.3E-05	5.0E-06	2.2E-05	---	---	---	---	2.6E-03	0.01	2.8E-03	0.01
E009 (S009)	1.1E-04	4.8E-04	3.1E-06	1.3E-05	5.0E-06	2.2E-05	---	---	---	---	2.6E-03	0.01	2.8E-03	0.01
E010 (S010)	1.1E-04	4.8E-04	3.1E-06	1.3E-05	5.0E-06	2.2E-05	---	---	---	---	2.6E-03	0.01	2.8E-03	0.01
E011 (S011)	1.1E-04	4.8E-04	3.1E-06	1.3E-05	5.0E-06	2.2E-05	---	---	---	---	2.6E-03	0.01	2.8E-03	0.01
E012 (S012)	1.1E-04	4.8E-04	3.1E-06	1.3E-05	5.0E-06	2.2E-05	---	---	---	---	2.6E-03	0.01	2.8E-03	0.01
E013 (S013)	9.3E-07	4.1E-06	2.6E-08	1.1E-07	4.2E-08	1.8E-07	---	---	---	---	2.2E-05	9.7E-05	2.3E-05	1.0E-04
E014 (S014)	9.3E-07	4.1E-06	2.6E-08	1.1E-07	4.2E-08	1.8E-07	---	---	---	---	2.2E-05	9.7E-05	2.3E-05	1.0E-04
E015 (S015)	8.2E-05	3.6E-04	2.3E-06	1.0E-05	3.7E-06	1.6E-05	---	---	---	---	2.0E-03	0.01	2.1E-03	0.01
E016 (S016)	---	---	<0.01	<0.01	<0.01	<0.01	<0.01	<0.01	<0.01	<0.01	1.0E-03	<0.01	2.0E-03	1.0E-02
E017 (S017)	0.02	0.07	1.2E-03	5.3E-03	4.3E-04	1.9E-03	1.9E-05	8.4E-05	1.5E-04	6.6E-04	---	---	0.02	0.11
E018 (S018)	---	---	0.02	0.01	0.04	0.01	3.2E-03	8.4E-04	0.01	3.0E-03	0.79	0.21	0.88	0.23
Fugitives	---	---	---	0.01	---	0.03	---	6.8E-03	---	0.05	---	0.23	---	0.88
Haul Roads	---	---	---	---	---	---	---	---	---	---	---	---	---	---
Facility Total	0.02	0.07	0.03	0.02	0.05	0.04	3.4E-03	0.01	0.01	0.06	0.85	0.55	0.97	1.35

Facility Total (excl. fugitives)	0.02	0.07	2.6E-03	0.01	3.2E-03	0.01	2.2E-04	3.5E-04	8.7E-04	1.6E-03	0.06	0.11	0.09	0.24

Annual emissions shall be based on 8,760 hours per year of operation for all emission units except emergency generators.
According to 45CSR14 Section 2.43.e, fugitive emissions are not included in the major source determination because it is not listed as one of the source categories in Table 1. Therefore, fugitive emissions shall not be included in the PTE above.

ATTACHMENT U

Class I Legal Advertisement

RECOMMENDED PUBLIC NOTICE TEMPLATE

AIR QUALITY PERMIT NOTICE
Notice of Application

Notice is given that EQT Production Company has applied to the West Virginia Department of Environmental Protection, Division of Air Quality, for a G70-B General Permit Registration for an existing natural gas production facility located on Left Fork Run Road, near Oxford, in Doddridge County, West Virginia. The latitude and longitude coordinates are: 39.22873 N, -80.78660 W.

The applicant estimates the potential to discharge the following Regulated Air Pollutants will be:

Pollutant	Emissions in tpy (tons per year)
NOx	15.46
CO	14.22
VOC	3.38
SO_2	0.09
PM	1.16
Total HAPs	1.31
Carbon Dioxide Equivalents (CO_2e)	17,769.28

Written comments will be received by the West Virginia Department of Environmental Protection, Division of Air Quality, 601 57th Street, SE, Charleston, WV 25304, for at least 30 calendar days from the date of publication of this notice.

Any questions regarding this permit application should be directed to the DAQ at (304) 926-0499, extension 1250, during normal business hours.
Dated this the **(Day)** day of **(Month)**, 2016.

By: EQT Production Company
Kenneth Kirk, Executive Vice President
625 Liberty Ave Suite 1700
Pittsburgh, PA 15222

ATTACHMENT V

General Permit Registration Application Fee