P & A Engineers and Consultants, Inc.

312 Justice Avenue
Logan, WV 25601

Phone (304) 752-8320
Fax (304) 752-7488

January 6, 2017

Mr. William F. Durham, Director
Division of Air Quality
601 57th Street SE
Charleston, WV 25304

RE: Highland Mining Company
Highland Surface Mine
Facility ID: Pending

Dear Mr. Durham:

On behalf of Highland Mining Company, we submit the enclosed application for a Temporary Rock Crusher Permit at the above-referenced facility. Included is a check in the amount of $1,500, which represents the submittal fee, and two additional permit copies for your review and approval.

The application addresses the construction and operation of a 400TPH rock crushing and screening plant to be located on the Highland Surface Mine in Logan County, WV. The facility will be used for ditches and road base material and will be moved upon project completion.

If additional information or clarification is needed, please contact me at the Logan address listed above or call 304-752-8320.

Sincerely,

Donna J. Toler
Air Quality Project Manager

donnatoler@suddenlink.net

TABLE OF CONTENTS

WEST VIRGINIA
DEPARTMENT OF ENVIRONMENTAL PROTECTION
DIVISION OF AIR QUALITY
7012 MacCorkle Avenue, South East
Charleston, WV 25304-2943
Phone: (304) 926-3647
www.dep.state.wv.us/daq

APPLICATION FOR PERMIT

TO CONSTRUCT, MODIFY, RELOCATE, ADMINISTRATIVELY UPDATE OR TEMPORARILY PERMIT A STATIONARY SOURCE OF AIR POLLUTANTS

PLEASE CHECK ALL THAT APPLY (IF KNOWN):

☐ **CONSTRUCTION** ☐ **MODIFICATION**
☐ **RELOCATION** ☐ **ADMINISTRATIVE UPDATE**
■ **TEMPORARY PERMIT** ☐ **AFTER-THE-FACT**

FOR AGENCY USE ONLY:

PLANT I.D. # _____ *PERMIT #* _____

PERMIT WRITER: _____

SECTION I. GENERAL

1. NAME OF APPLICANT (AS REGISTERED WITH THE WV SECRETARY OF STATE'S OFFICE):
HIGHLAND MINING COMPANY

2. FEDERAL EMPLOYER ID NO. (**FEIN**):
55 0257301

3. NAME OF FACILITY (IF DIFFERENT FROM ABOVE):
HIGHLAND SURFACE MINE

4. THE APPLICANT IS THE:
☐ **OWNER** ☐ **OPERATOR** ■ **BOTH**

5A. APPLICANT'S MAILING ADDRESS:
PO BOX 1098
HOLDEN, WV 25625

5B. FACILITY'S PRESENT PHYSICAL ADDRESS:
ROUTE 17 SOUTH
HETZEL, WV

6. **WV BUSINESS REGISTRATION**. IS THE APPLICANT A RESIDENT OF THE STATE OF WEST VIRGINIA? ☐ **YES** ■ **NO**
   - IF **YES**, PROVIDE A COPY OF THE **CERTIFICATE OF INCORPORATION/ORGANIZATION/LIMITED PARTNERSHIP** (ONE PAGE) INCLUDING ANY NAME CHANGE AMENDMENTS **OR** OTHER *BUSINESS CERTIFICATE* AS **ATTACHMENT A**.
   - IF **NO**, PROVIDE A COPY OF THE **CERTIFICATE OF AUTHORITY/AUTHORITY OF L.L.C./REGISTRATION** (ONE PAGE) INCLUDING ANY NAME CHANGE AMENDMENTS **OR** OTHER *BUSINESS CERTIFICATE* AS **ATTACHMENT A**.

7. IF APPLICANT IS A SUBSIDIARY CORPORATION, PLEASE PROVIDE THE NAME OF PARENT CORPORATION:
ALPHA NATURAL RESOURCES

8. DOES THE APPLICANT OWN, LEASE, HAVE AN OPTION TO BUY, OR OTHERWISE HAVE CONTROL OF THE *PROPOSED SITE*?
■ **YES** ☐ **NO**
   - IF **YES**, PLEASE EXPLAIN: **OWNER/OPERATOR**
   - IF **NO**, YOU ARE NOT ELIGIBLE FOR A PERMIT FOR THIS SOURCE.

9. TYPE OF PLANT OR FACILITY (STATIONARY SOURCE) TO BE **CONSTRUCTED, MODIFIED, RELOCATED, ADMINISTRATIVELY UPDATED**, OR **TEMPORARILY PERMITTED** (E.G., COAL PREPARATION PLANT, PRIMARY CRUSHER, ETC…):
ROCK CRUSHER

10. STANDARD INDUSTRIAL CLASSIFICATION (**SIC**) CODE FOR THE FACILITY:
1422

11A. DAQ PLANT I.D. NO. (FOR AN EXISTING FACILITY ONLY):
045-00018

11B. LIST ALL CURRENT 45CSR13 AND 45CSR30 (TITLE V)* PERMIT NUMBERS ASSOCIATED WITH THIS PROCESS (FOR AN EXISTING FACILITY ONLY):
G10-D119B BANDMILL PREP PLANT OR HIGHLAND TRUCK DUMP LOCATION

12. HAS THIS SOURCE BEEN DEFERRED FROM 45CSR30 PERMITTING REQUIREMENTS? ■ **YES** ☐ **NO** ☐ **UNKNOWN**

* IF A 45CSR30 (TITLE V) PERMIT EXISTS FOR THIS FACILITY, IN ORDER TO OPERATE, PLEASE UPDATE YOUR PERMIT ACCORDING TO THE CHANGES PROPOSED IN THE PERMIT APPLICATION.

13A. FOR **MODIFICATIONS, ADMINISTRATIVE UPDATES, OR TEMPORARY PERMITS** AT AN EXISTING FACILITY, PLEASE PROVIDE DIRECTIONS TO THE *PRESENT LOCATION* OF THE FACILITY FROM THE NEAREST STATE ROAD;

FOR **CONSTRUCTION OR RELOCATION PERMITS**, PLEASE PROVIDE DIRECTIONS TO *THE PROPOSED NEW SITE LOCATION* FROM THE NEAREST STATE ROAD.

From Logan, proceed toward Blair on Route 17 through Ethel and at the foot of Blair Mountain, the guard shack on right on the main road with company name identified. Ask for directions to surface mine.

INCLUDE A **MAP** AS **ATTACHMENT B**.

13B. NEW SITE ADDRESS (IF APPLICABLE):	13C. NEAREST CITY OR TOWN:	13D. COUNTY:
N/A	ETHEL	LOGAN
13E. UTM NORTHING (KM): 4192.98429	13F. UTM EASTING (KM): 423.12602	13G. UTM ZONE: 17

14. BRIEFLY DESCRIBE THE PROPOSED CHANGE(S) AT THE FACILITY:

TEMPORARILY PERMIT ROCK CRUSHER FOR DITCHES AND ROAD BASE – THEN MOVE BACK TO PAX LOCATION.

PERMITTED UNDER G40-C075P1 777-00138 PREMIUM ENERGY

15A. PROVIDE THE DATE OF ANTICIPATED INSTALLATION OR CHANGE:	15B. DATE OF ANTICIPATED START-UP IF A PERMIT IS GRANTED:
Upon Permit Approval ➢ IF THIS IS AN **AFTER-THE-FACT** PERMIT APPLICATION, PROVIDE THE DATE UPON WHICH THE PROPOSED CHANGE DID HAPPEN: _____/_____/_____	Upon Permit Approval

15C. PROVIDE A **SCHEDULE** OF THE PLANNED **INSTALLATION** OF/ **CHANGE** TO AND **START-UP** OF EACH OF THE UNITS PROPOSED IN THIS PERMIT APPLICATION AS **ATTACHMENT C** (IF MORE THAN ONE UNIT IS INVOLVED).

16. PROVIDE MAXIMUM PROJECTED **OPERATING SCHEDULE** OF ACTIVITY/ ACTIVITIES OUTLINED IN THIS APPLICATION:

HOURS PER DAY 8 DAYS PER WEEK 5 WEEKS PER YEAR 40

17. IS *DEMOLITION* OR PHYSICAL *RENOVATION* AT AN EXISTING FACILITY INVOLVED? ☐ **YES** ■ **NO**

18. DOES THE APPLICANT OPERATE A FACILITY WHERE HAZARDOUS WASTE IS TREATED, STORED, OR DISPOSED OF?
☐ **YES** ■ **NO** ☐ **UNKNOWN**

19. **RISK MANAGEMENT PLANS**. IF THIS FACILITY IS SUBJECT TO 112(r) OF THE 1990 CAAA, OR WILL BECOME SUBJECT DUE TO PROPOSED CHANGES THE PROPOSED CHANGES (FOR APPLICABILITY HELP SEE ***www.epa.gov/ceppo***), SUBMIT YOUR **RISK MANAGEMENT PLAN (RMP)** TO US EPA REGION III.

20. **REGULATORY DISCUSSION**. LIST ALL FEDERAL AND STATE AIR POLLUTION CONTROL REGULATIONS THAT YOU BELIEVE ARE APPLICABLE TO THE PROPOSED PROCESS **(IF KNOWN)**. DISCUSS APPLICABILITY AND PROPOSED DEMONSTRATION(S) OF COMPLIANCE **(IF KNOWN)**. PROVIDE THIS INFORMATION AS **ATTACHMENT D**.

SECTION II. ADDITIONAL ATTACHMENTS AND SUPPORTING DOCUMENTS

21. INCLUDE A CHECK PAYABLE TO WV DEP – DEPARTMENT OF AIR QUALITY WITH APPROPRIATE **APPLICATION FEE** (PER 45CSR22).

22. INCLUDE A **TABLE OF CONTENTS** AS THE FIRST PAGE OF YOUR APPLICATION PACKAGE.

23. PROVIDE A **PLOT PLAN**, E.G. SCALED MAP(S) AND/OR SKETCH(ES) SHOWING THE LOCATION OF THE PROPERTY ON WHICH THE STATIONARY SOURCE(S) IS OR IS TO BE LOCATED AS **ATTACHMENT E**.
➢ INDICATE THE LOCATION OF THE NEAREST OCCUPIED STRUCTURE (E.G. CHURCH, SCHOOL, BUSINESS, RESIDENCE).

24. PROVIDE A **DETAILED PROCESS FLOW DIAGRAM(S)** SHOWING EACH PROPOSED OR MODIFIED EMISSIONS UNIT, EMISSION POINT, AND CONTROL DEVICE AS **ATTACHMENT F**.

25. PROVIDE A **PROCESS DESCRIPTION** AS **ATTACHMENT G**.

- ALSO DESCRIBE AND QUANTIFY TO THE EXTENT POSSIBLE ALL CHANGES MADE TO THE FACILITY SINCE THE LAST PERMIT REVIEW (IF APPLICABLE).

26. PROVIDE **MATERIAL SAFETY DATA SHEETS (MSDS)** FOR ALL MATERIALS PROCESSES, USED OR PRODUCED AS **ATTACHMENT H.**

- FOR CHEMICAL PROCESSES, PROVIDE A MSDS FOR EACH COMPOUND EMITTED TO THE AIR.

27. FILL OUT THE **EQUIPMENT LIST FORM** * AND PROVIDE IT AS **ATTACHMENT I**.

28. FILL OUT THE **EMISSION POINTS DATA SUMMARY SHEET** * (TABLE 1 AND TABLE 2) AND PROVIDE IT AS **ATTACHMENT J**.

29. FILL OUT THE **FUGITIVE EMISSIONS DATA SUMMARY SHEET** * AND PROVIDE IT AS **ATTACHMENT K**.

30. CHECK ALL APPLICABLE **EMISSIONS UNIT DATA SHEETS** LISTED BELOW:

☐ **BULK LIQUID TRANSFER OPERATIONS**
☐ **CHEMICAL PROCESSES**
☐ **CONCRETE BATCH PLANT**
☐ **GREY IRON AND STEEL FOUNDRY**
☐ **GENERAL EMISSION UNIT,** SPECIFY:
☐ **HAUL ROAD EMISSIONS**
☐ **HOT MIX ASPHALT PLANT**
☐ **INCINERATOR AND STORAGE FACILITIES**
☐ **INDIRECT HEAT EXCHANGER**
☐ **QUARRY**
☐ **SOLID MATERIALS SIZING, HANDLING**
■ **STORAGE TANKS**

FILL OUT AND PROVIDE THE **EMISSIONS UNIT DATA SHEET(S)** * AS **ATTACHMENT L**.

31. CHECK ALL APPLICABLE **AIR POLLUTION CONTROL DEVICE SHEETS** LISTED BELOW:

☐ **ABSORPTION SYSTEMS**
☐ **ADSORPTION SYSTEMS**
☐ **AFTERBURNER**
☐ **OTHER COLLECTORS**, SPECIFY:
☐ **BAGHOUSE**
☐ **CONDENSER**
☐ **ELECTROSTATIC PRECIPITATOR**
☐ **FLARE**
☐ **MECHANICAL COLLECTOR**
☐ **WET COLLECTING SYSTEM**

FILL OUT AND PROVIDE THE **AIR POLLUTION CONTROL DEVICE SHEET(S)** * AS **ATTACHMENT M**.

32. PROVIDE ALL **SUPPORTING EMISSIONS CALCULATIONS** AS **ATTACHMENT N**, OR ATTACH THE CALCULATIONS DIRECTLY TO THE FORMS LISTED IN ITEMS 28 THROUGH 31.

33. **MONITORING, RECORDKEEPING, REPORTING, AND TESTING PLANS.** ATTACH PROPOSED MONITORING, RECORDKEEPING, REPORTING AND TESTING PLANS IN ORDER TO DEMONSTRATE COMPLIANCE WITH THE PROPOSED EMISSIONS LIMITS AND OPERATING PARAMETERS IN THIS PERMIT APPLICATION. PROVIDE THIS INFORMATION AS **ATTACHMENT O**.

- PLEASE BE AWARE THAT ALL PERMITS MUST BE PRACTICALLY ENFORCEABLE WHETHER OR NOT THE APPLICANT CHOOSES TO PROPOSE SUCH MEASURES. ADDITIONALLY, THE DAQ MAY NOT BE ABLE TO ACCEPT ALL MEASURES PROPOSED BY THE APPLICANT. IF NONE OF THESE PLANS ARE PROPOSED BY APPLICANT, DAQ WILL DEVELOP SUCH PLANS AND INCLUDE THEM IN THE PERMIT.

34. **PUBLIC NOTICE** (FOR CLASS II ADMINISTRATIVE UPDATE PER 45CSR13-4.2.b, RELOCATION OR TEMPORARY PERMIT ONLY):

- AT THE TIME THAT THE APPLICATION IS SUBMITTED PLACE A **CLASS I LEGAL ADVERTISEMENT** IN A NEWSPAPER OF GENERAL CIRCULATION IN THE AREA WHERE SOURCE IS OR WILL TO BE LOCATED (SEE **45CSR13-8.3** AND *EXAMPLE LEGAL ADVERTISEMENT* * FOR DETAILS). PLEASE SUBMIT **AFFIDAVIT OF PUBLICATION** IMMEDIATELY UPON RECEIPT.
- TRANSMIT TO THE COUNTY COURTHOUSE IN THE COUNTY WHERE THE SOURCE IS OR WILL BE LOCATED A COPY OF THE INFORMATION CONTAINED IN THE *CLASS I LEGAL ADVERTISEMENT* (PER 45CSR13-8.7). PLEASE SUBMIT **PROOF** OF THIS (FOR EXAMPLE, FAX COVER PAGE) TO OAQ ALONG WITH THE AFFIDAVIT OF PUBLICATION.

35. **BUSINESS CONFIDENTIALITY CLAIMS.** DOES THIS APPLICATION INCLUDE CONFIDENTIAL INFORMATION (PER 45CSR31)?

☐ **YES** ■ **NO**

- IF **YES**, IDENTIFY EACH SEGMENT OF INFORMATION ON EACH PAGE THAT IS SUBMITTED AS CONFIDENTIAL, AND PROVIDE JUSTIFICATION FOR EACH SEGMENT CLAIMED CONFIDENTIAL, INCLUDING THE CRITERIA UNDER 45CSR3-4.1, AND IN ACCORDANCE WITH THE OAQ'S *"PRECAUTIONARY NOTICE - CLAIMS OF CONFIDENTIALITY"* GUIDANCE FOUND IN THE *GENERAL INSTRUCTIONS* *.

* ALL THE REQUIRED FORMS AND ADDITIONAL INFORMATION CAN BE FOUND AND DOWNLOADED FROM OAQ'S PERMITTING SECTION WEB SITE: ***www.dep.state.wv.us/daq/permit/nsr/nsr.htm*** OR REQUESTED BY PHONE (304) 926-3727 AND/OR OBTAINED THROUGH THE MAIL.

SECTION IV. CERTIFICATION OF INFORMATION

This General Permit Registration Application shall be signed below by a Responsible Official. A Responsible Official is a President, Vice President, Secretary, Treasurer, General Partner, General Manager, a member of a Board of Directors, or Owner, depending on business structure. A business may certify an Authorized Representative who shall have authority to bind the Corporation, Partnership, Limited Liability Company, Association, Joint Venture or Sole Proprietorship. Required records of daily throughput, hours of operation and maintenance, general correspondence, Emission Inventory, Certified Emission Statement, compliance certifications and all required notifications must be signed by a Responsible Official or an Authorized Representative. If a business wishes to certify an Authorized Representative, the official agreement below shall be checked off and the appropriate names and signatures entered. Any administratively incomplete or improperly signed or unsigned Registration Application will be returned to the applicant.

FOR A CORPORATION (domestic or foreign)

[redacted] **I certify that I am a President, Vice President, Secretary, Treasurer or in charge of a principal business function of the corporation**

FOR A PARTNERSHIP

G **I certify that I am a General Partner**

FOR A LIMITED LIABILITY COMPANY

G **I certify that I am a General Partner or General Manager**

FOR AN ASSOCIATION

G **I certify that I am the President or a member of the Board of Directors**

FOR A JOINT VENTURE

G **I certify that I am the President, General Partner or General Manager**

FOR A SOLE PROPRIETORSHIP

G **I certify that I am the Owner and Proprietor**

G

is an Authorized Representative and in that capacity shall represent the interest of the business (e.g., Corporation, Partnership, Limited Liability Company, Association Joint Venture or Sole Proprietorship) and may obligate and legally bind the business. If the business changes its Authorized Representative, a Responsible Official shall notify the Chief of the Office of Air Quality immediately, and/or,

I hereby certify that all information contained in this General Permit Registration Application and any supporting documents appended hereto is, to the best of my knowledge, true, accurate and complete, and that all reasonable efforts have been made to provide the most comprehensive information possible

Signature Gary Goff 12-6-16
(please use blue ink) Responsible Official Date

Name & Title **GARY GOFF, PRESIDENT**
(please print or type)

Signature _____
(please use blue ink) Authorized Representative (if applicable) Date

Applicant's Name: HIGHLAND MINING COMPANY

Phone: 304-239-2300

Email: ggoff@alphanr.com (contact: Jamie Johnson jamjohnson@alphanr.com)

2009

WEST VIRGINIA
STATE TAX DEPARTMENT

2011

BUSINESS REGISTRATION CERTIFICATE

ISSUED TO:
HIGHLAND MINING COMPANY
RT 10
TAPLIN, WV 25632

BUSINESS REGISTRATION ACCOUNT NUMBER: **1044-9580**

This certificate is issued for the registration period beginning: **July 1, 2009**
This certificate is valid until: **June 30, 2011**

This business registration certificate is issued by the West Virginia State Tax Commissioner in accordance with Chapter 11, Article 12 of the West Virginia Code.

The person or organization identified on this certificate is registered to conduct business in the State of West Virginia at the location above.

This certificate is not transferrable and must be displayed at the location for which issued.

ENGAGING IN BUSINESS WITHOUT CONSPICUOUSLY POSTING A WEST VIRGINIA BUSINESS REGISTRATION CERTIFICATE IN THE PLACE OF BUSINESS IS A CRIME AND MAY SUBJECT YOU TO FINES PER W. VA. CODE § 11-9.

TRAVELING/STREET VENDORS: Must carry a copy of this certificate in every vehicle operated by them. CONTRACTORS, DRILLING OPERATORS, TIMBER/LOGGING OPERATIONS: Must have a copy of this certificate displayed at every job site within West Virginia.

atL007 v.59
L0812313856


HIGHLAND MINING COMPANY
ROCK CRUSHER
LOCATION MAP
16144.dwg
37°52'52"
322043.88
Hetzel
Blair Mtn
Lookout Tower
Rockcamp
Branch
Camp
Run
Dingess
Fork
Freeze
Creek
Left
Pine
Gas Well
Strip Mine
Mine
ABANDONED
Map edited 1989
FEET

Lon/Lat

Longitude: - 81 d 52 m 27 s

Latitude: + 37 d 52 m 52 s

DD: -81.874167 37.881111

Datum: NAD27 NAD83

Convert

UTM

Coordinates: 423126.02 E 4192984.29 N

Datum: NAD27 NAD83 Zone: 17

Convert

WV State Plane (feet)

Coordinates: 1283054.88 E -216382.38 N

Datum: NAD27 NAD83 Zone: North

Convert

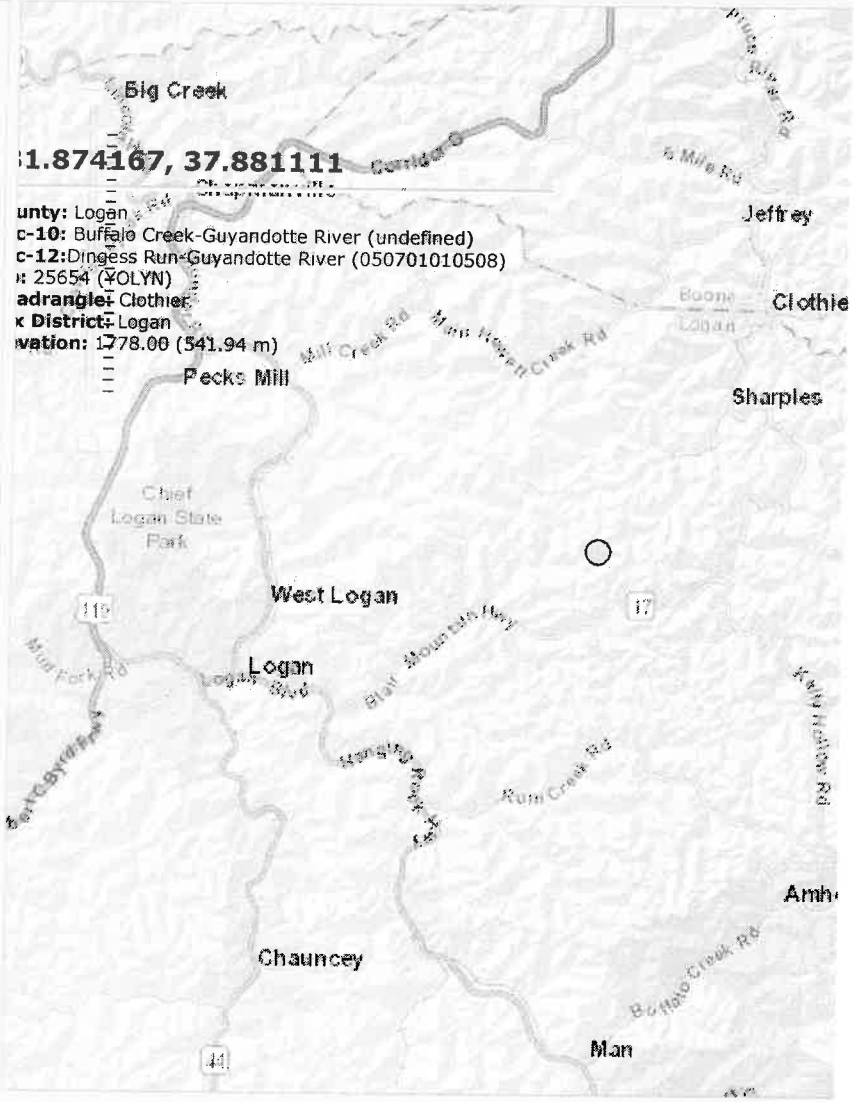

clear markers street map image topo

Attachment C

Installation and Start-Up Schedule

Installation upon permit approval

Attachment D

Regulatory Discussion

The permitted facility should comply with pertinent sections of the following rules and regulations:

45CSR2 – Prevent and Control Air Pollution from the Combustion of Fuel in Indirect Heat Exchangers

45CSR7 – To Prevent and Control Particulate Air Pollution from Manufacturing Process and Associated Operations

45CSR10 – To Prevent and Control Air Pollution from the Emission of Sulfur Oxides

45CRS13 – Permits for Construction, Modification, Relocation and Operation of Stationary Sources of Air Pollutants, Notification Requirements, Temporary Permits, General Permits, and Procedures for Evaluation

45CSR16 – Standards of Performance for Stationary Sources

45CSR17 – To Prevent and Control Particulate Air Pollution from Materials Handling, Preparation, Storage and Other Sources of Fugitive Particulate Matter

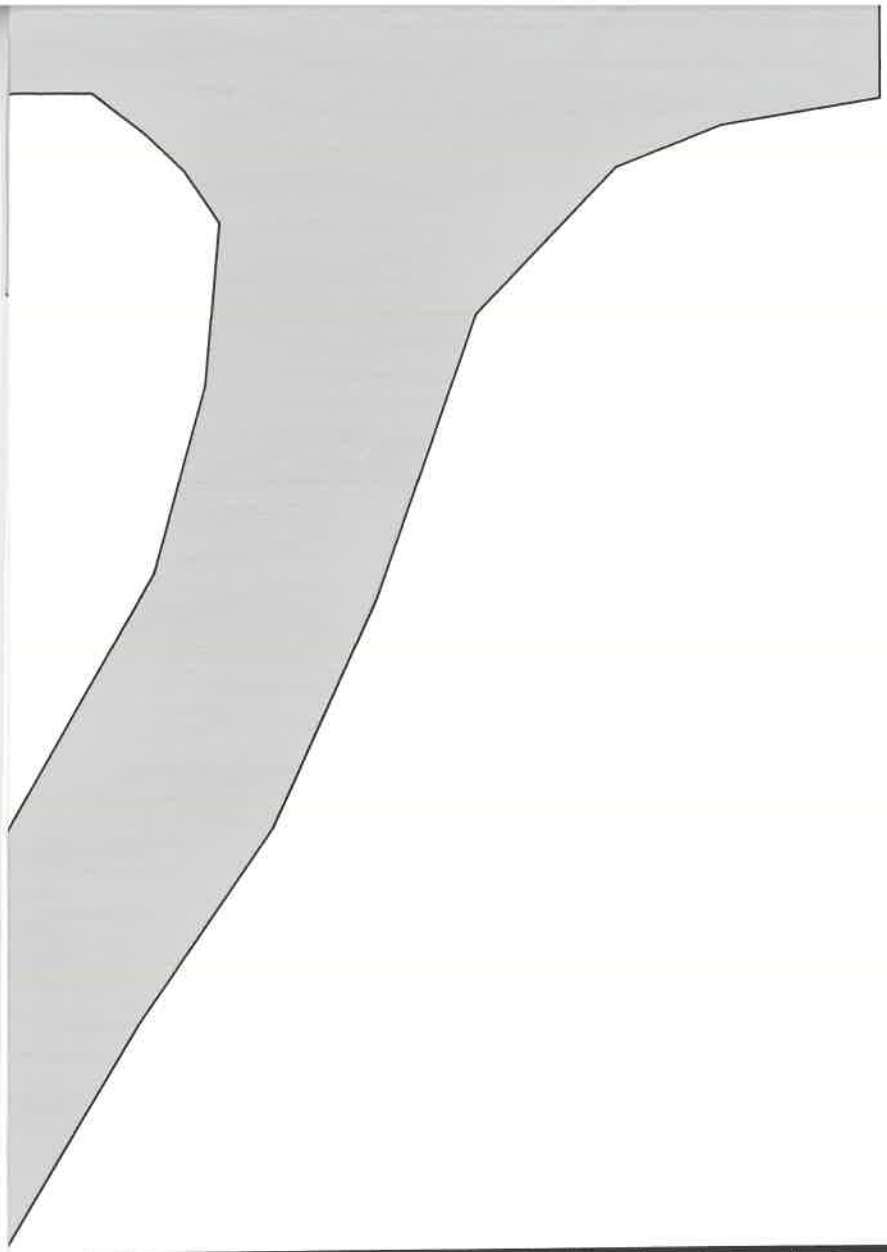

Prepared by:

P&A ENGINEERS & CONSULTANTS

PO Box 470 Alum Creek, WV 25003 (304) 756-4066

No.	Date	Revision	By
1			
2			
3			
4			
5			

Drawing Date: 12/07/16	Drawn By: G. Caudill
Computer No.: 16143	Topo Contour Interval: na
Scale: na	Sheet No.: 1 of 1

Submittal Date:
December 2016

Highland Mining Company

P.O. Box 1080
Holden, WV 25625

Crusher / Screen System

Facility ID Number Pending
Division of Air Quality
Site Map

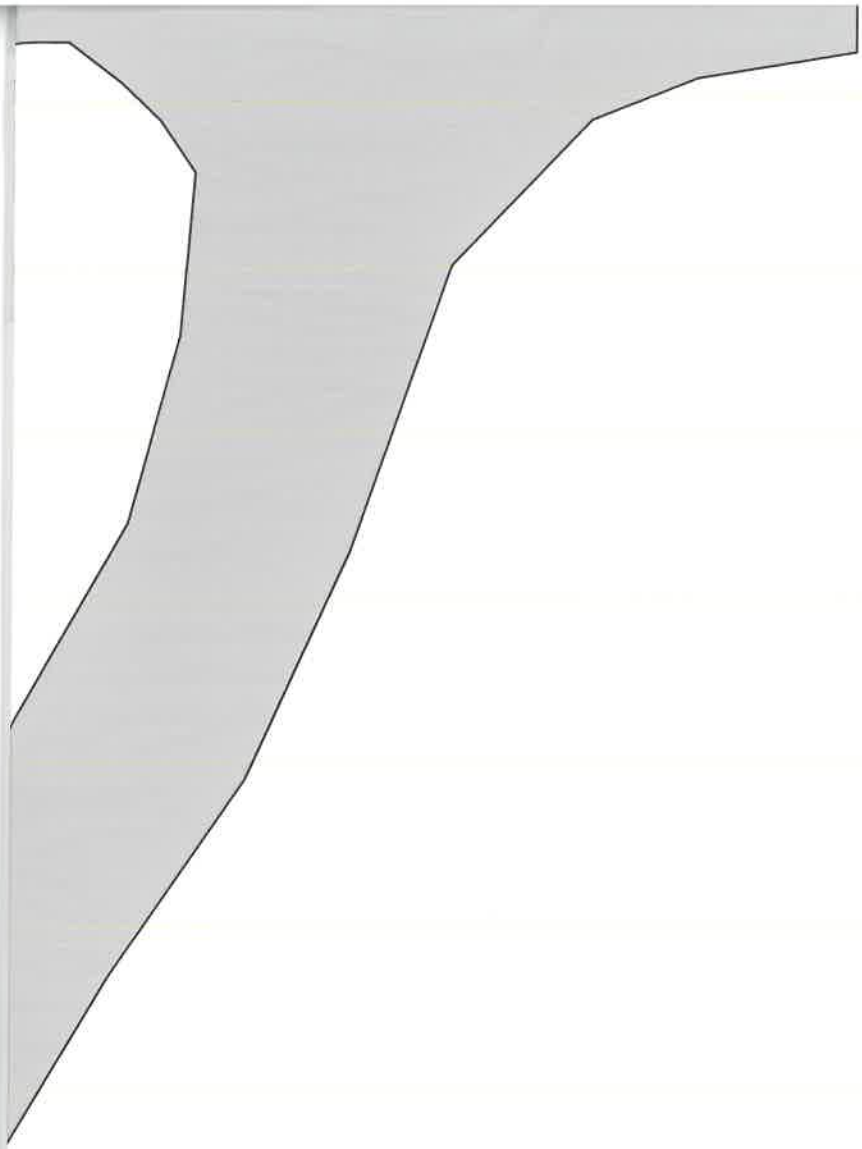

Prepared by:

P&A ENGINEERS & CONSULTANTS

PO Box 470 Alum Creek, WV 25003 (304) 756-4066

No.	Date	Revision	By
1			
2			
3			
4			
5			

Drawing Date: 12/07/16	Drawn By: G. Caudill
Computer No.: 16142	Topo Contour Interval: na
Scale: na	Sheet No.: 1 of 1

Submittal Date:
December 2016

Highland Mining Company

P.O. Box 1080
Holden, WV 25625

Crusher / Screen System

Facility ID Number Pending
Division of Air Quality
Material Flow Diagram

ATTACHMENT G

PROCESS DESCRIPTION

Rock from adjacent overburden areas will be transferred to BS-01(PW) by front end loader @ TP-01(UD-PW); go to belt conveyor BC-01(NC) @ TP-02(TC-PE); and transfer to screen SS-01(PW) @ TP-03(TC-PW). The screen will discharge material by size to two separate stockpiles OS-01(SW-WS) and OS-02(SW-WS) via belt conveyors BC-02(NC) and BC-03(NC) @ TP-04(TC-FE) thru TP-08(TC-MDH). The screen will transfer to belt conveyor BC-04(NC) @ TP-10(TC-FE) and feed bin BS-02(PW) @ TP-11(TC-PW). From BS-02, material will transfer to BC-05(NC) @ TP-12(TC-PE) to the crusher CR-01(FE) @ TP-13(TC-FE). The material will be crushed and discharged to stockpiles OS-03(SW-WS), OS-04(SW-WS), OS-05(SW-WS) according to size via belt conveyors BC-06(NC), BC-07(NC), and BC-08(NC) @ TP-14(TC-FE) thru TP-21(LO-MDH). Material will be loaded to truck for distribution on mine site at TP-06(LO-MDH), TP-09(LO-MDH), TP-16(LO-MDH), TP-18(LO-MDH), and TP-22(LO-MDH).

Company officials have agreed to install a portable water spray system to control fugitive emissions.

AP-42 emission calculations are to be used for the basis of permit requirements due to lack of EPA data for test results.

Attachment H

MSDS SHEETS

MSDS sheets for coal or miscellaneous materials are not required for this section.

Attachment I – BELT CONVEYORS

Emission Units Table

(includes all emission units and air pollution control devices that will be part of this permit application review, regardless of permitting status)

Emission Unit ID[1]	Emission Point ID[2]	Emission Unit Description	Year Installed/ Modified	Design Capacity	Type[3] and Date of Change	Control Device[4]
BC-01	TP03	Belt Conveyor	2017	400	Proposed	NC
BC-02	TP05	Belt Conveyor	2017	400	Proposed	NC
BC-03	TP08	Belt Conveyor	2017	400	Proposed	NC
BC-04	TP11	Belt Conveyor	2017	400	Proposed	NC
BC-05	TP13	Belt Conveyor	2017	400	Proposed	NC
BC-06	TP15	Belt Conveyor	2017	400	Proposed	NC
BC-07	TP18	Belt Conveyor	2017	400	Proposed	NC
BC-08	TP21	Belt Conveyor	2017	400	Proposed	NC

[1] For Emission Units (or Sources) use the following numbering system:1S, 2S, 3S,... or other appropriate designation.
[2] For Emission Points use the following numbering system:1E, 2E, 3E, ... or other appropriate designation.
[3] New, modification, removal
[4] For Control Devices use the following numbering system: 1C, 2C, 3C,... or other appropriate designation.

STORAGE ACTIVITY AFFECTED SOURCE SHEET

Source Identification Number[1]	**BS-01**	**BS-02**			
Type of Material Stored[2]	**Rock**	**Rock**			
Average Moisture Content (%)[3]	**3**	**3**			
Maximum Yearly Storage Throughput (tons)[4]	**3,504,000**	**3,504,000**			
Maximum Storage Capacity (tons)[5]	**10**	**10**			
Maximum Base Area (ft^2)[6]					
Maximum Pile Height (ft)[7]					
Method of Material Load-in[8]	**Endloader**	**Endloader**			
Load-in Control Device Identification Number[9]	**UD-PW**	**UD-PW**			
Storage Control Device Identification Number[9]	**PW**	**PW**			
Method of Material Load-out[8]	**SS**	**SS**			
Load-out Control Device Identification Number[9]	**TC-PE**	**TC-PE**			

1. Enter the appropriate Source Identification Number for each storage activity using the following codes. For example, if the facility utilizes three storage bins, four open stockpiles and one storage building (full enclosure), the Source Identification Numbers should be BS-1, BS-2, and BS-3; OS-1, OS-2, OS-3, and OS-4; and SB-1, respectively.
   - BS Bin or Storage Silo (full enclosure)
   - OS Open Stockpile
   - SF Stockpiles with wind fences
   - E3 Enclosure (three sided enclosure)
   - SB Storage Building (full enclosure)
   - OT Other

2. Describe the type of material stored or stockpiled (e.g. clean coal, raw coal, refuse, etc).
3. Enter the average percent moisture content of the stored material.
4. Enter the maximum yearly storage throughput for each storage activity.
5. Enter the maximum storage capacity for each storage activity in tons (e.g. silo capacity, maximum stockpile size, etc.)
6. For stockpiles, enter the maximum stockpile base area.
7. For stockpiles, enter the maximum stockpile height.
8. Enter the method of load-in or load-out to/from stockpiles or bins using the following codes:
   - CS Clamshell
   - FC Fixed Height Chute from Bins
   - FE Front Endloader
   - MC Mobile Conveyor/Stacker
   - UC Under-pile or Under-Bin Reclaim Conveyor
   - RC Rake or Bucket Reclaim Conveyor
   - SS Stationary Conveyor/Stacker
   - ST Stacking Tube
   - TC Telescoping Chute from Bins
   - TD Truck Dump
   - PC Pneumatic Conveyor/Stacker
   - OT Other

CRUSHING AND SCREENING AFFECTED SOURCE SHEET

Source Identification Number[1]		CR-01					
Type of Crusher or Screen[2]		DR					
Date of Manufacture[3]		2011					
Maximum Throughput[4]	tons/hour	400					
	tons/year	3,504,000					
Material sized from/to:[5]		6 x 0					
Average Moisture Content (%)[6]		3					
Control Device ID Number[7]		PW					
Baghouse Stack Parameters[8]	height (ft)	N/A					
	diameter (ft)						
	volume (ACFM)						
	exit temp (°F)						
	UTM Coordinates						
Maximum Operating Schedule[9]	hours/day	8					
	days/year	200					
	hours/year	1600					
Percentage of Operation[10]	January-March	25					
	April-June	25					
	July-September	25					
	Oct-December	25					

1. Enter the appropriate Source Identification Number for each crusher and screen. For example, in the case of an operation which incorporates multiple crushers, the crushers should be designated CR-1, CR-2, CR-3 etc. beginning with the breaker or primary crusher. Multiple screens should be designated S-1, S-2, S-3 etc.
2. Describe types of crushers and screens using the following codes:

HM	Hammermill	SS	Stationary Screen
DR	Double Roll Crusher	SD	Single Deck Screen
BM	Ball Mill	DD	Double-Deck Screen
RB	Rotary Breaker	TD	Triple Deck Screen
JC	Jaw Crusher	OT	Other
GC	Gyratory Crusher		
OT	Other - Quadroll		

3. Enter the date that each crusher and screen was manufactured.
4. Enter the maximum throughput for each crusher and screen in tons per hour and tons per year.
5. Describe the nominal material size reduction (e.g. +2"/ -_").
6. Enter the average percent moisture content of the material processed.
7. Enter the appropriate Control Device Identification Number for each crusher and screen. Refer to Table A - *Control Device Listing* and *Control Device Identification Number Instructions* in the *Reference Document* for Control Device ID prefixes and numbering.
8. Enter the appropriate stack parameters if a baghouse control device is used.
9. Enter the maximum operating schedule for each crusher and screen in hours per day, days per year and hours per year.
10. Enter the estimated percentage of operation throughout the year for each crusher and screen.

CRUSHING AND SCREENING AFFECTED SOURCE SHEET

Source Identification Number[1]		**SS-01**					
Type of Crusher or Screen[2]		**DD**					
Date of Manufacture[3]		**2011**					
Maximum Throughput[4]	tons/hour	**400**					
	tons/year	**3,504,000**					
Material sized from/to:[5]		**6 x 0**					
Average Moisture Content (%)[6]		**3**					
Control Device ID Number[7]		**PW**					
Baghouse Stack Parameters[8]	height (ft)	**N/A**					
	diameter (ft)						
	volume (ACFM)						
	exit temp (°F)						
	UTM Coordinates						
Maximum Operating Schedule[9]	hours/day	**8**					
	days/year	**200**					
	hours/year	**1600**					
Percentage of Operation[10]	January-March	**25**					
	April-June	**25**					
	July-September	**25**					
	Oct-December	**25**					

1. Enter the appropriate Source Identification Number for each crusher and screen. For example, in the case of an operation which incorporates multiple crushers, the crushers should be designated CR-1, CR-2, CR-3 etc. beginning with the breaker or primary crusher. Multiple screens should be designated S-1, S-2, S-3 etc.
2. Describe types of crushers and screens using the following codes:

HM	Hammermill	SS	Stationary Screen
DR	Double Roll Crusher	SD	Single Deck Screen
BM	Ball Mill	DD	Double-Deck Screen
RB	Rotary Breaker	TD	Triple Deck Screen
JC	Jaw Crusher	OT	Other
GC	Gyratory Crusher		
OT	Other - Quadroll		

3. Enter the date that each crusher and screen was manufactured.
4. Enter the maximum throughput for each crusher and screen in tons per hour and tons per year.
5. Describe the nominal material size reduction (e.g. +2"/ -_").
6. Enter the average percent moisture content of the material processed.
7. Enter the appropriate Control Device Identification Number for each crusher and screen. Refer to Table A - *Control Device Listing* and *Control Device Identification Number Instructions* in the *Reference Document* for Control Device ID prefixes and numbering.
8. Enter the appropriate stack parameters if a baghouse control device is used.
9. Enter the maximum operating schedule for each crusher and screen in hours per day, days per year and hours per year.
10. Enter the estimated percentage of operation throughout the year for each crusher and screen.

EMISSION POINTS DATA SUMMARY SHEET

Table 1: Emissions Data

Emission Point ID No. *(Must match Emission Units Table & Plot Plan)*	Emission Point Type[1]	Emission Unit Vented Through This Point *(Must match Emission Units Table & Plot Plan)*		Air Pollution Control Device *(Must match Emission Units Table & Plot Plan)*		Vent Time for Emission Unit *(chemical processes only)*		All Regulated Pollutants - Chemical Name/CAS[3] *(Speciate VOCs & HAPS)*	Maximum Potential Uncontrolled Emissions[4]		Maximum Potential Controlled Emissions[5]		Emission Form or Phase *(At exit conditions, Solid, Liquid or Gas/Vapor)*	Est. Method Used[6]	Emission Concentration[7] (ppmv or mg/m^4)
		ID No.	Source	ID No.	Device Type	Short Term[2]	Max (hr/yr)		lb/hr	ton/yr	lb/hr	ton/yr			
	PLEASE SEE THE ATTACHED CALCULATIONS SPREADSHEETS IN SECTION N FOR PM AND PM10 POLLUTANTS – THERE ARE NO VOC'S OR HAP'S ASSOCIATED WITH THIS FACILITY														

The EMISSION POINTS DATA SUMMARY SHEET provides a summation of emissions by emission unit. Note that uncaptured process emission unit emissions are not typically considered to be fugitive and must be accounted for on the appropriate EMISSIONS UNIT DATA SHEET and on the EMISSION POINTS DATA SUMMARY SHEET. Please note that total emissions from the source are equal to all vented emissions, all fugitive emissions, plus all other emissions (e.g. uncaptured emissions). Please complete the FUGITIVE EMISSIONS DATA SUMMARY SHEET for fugitive emission activities.

1 Please add descriptors such as upward vertical stack, downward vertical stack, horizontal stack, relief vent, rain cap, etc.

2 Indicate by "C" if venting is continuous. Otherwise, specify the average short-term venting rate with units, for intermittent venting (ie., 15 min/hr). Indicate as many rates as needed to clarify frequency of venting (e.g., 5 min/day, 2 days/wk).

3 List all regulated air pollutants. Speciate VOCs, including all HAPs. Follow chemical name with Chemical Abstracts Service (CAS) number. **LIST** Acids, CO, CS_2, VOCs, H_2S, Inorganics, Lead, Organics, O_3, NO, NO_2, SO_2, SO_3, etc. **DO NOT LIST** CO_2, H_2, H_2O, N_2, O_2, and Noble Gases.

4 Give maximum potential emission rate with no control equipment operating. If emissions occur for less than 1 hr, then record emissions per batch in minutes (e.g. 5 lb VOC/20 minute batch).

5 Give maximum potential emission rate with proposed control equipment operating. If emissions occur for less than 1 hr, then record emissions per batch in minutes (e.g. 5 lb VOC/20 minute batch).

6 Indicate method used to determine emission rate as follows: MB = material balance; ST = stack test (give date of test); EE = engineering estimate; O = other (specify).

7 Provide for all pollutant emissions. Typically, the units of parts per million by volume (ppmv) are used. If the emission is a mineral acid (sulfuric, nitric, hydrochloric or phosphoric) use units of milligram per dry cubic meter (mg/m^3) at standard conditions (68 °F and 29.92 inches Hg) (see 45CSR7). If the pollutant is SO_2, use units of ppmv (See 45CSR10).

Attachment K

FUGITIVE EMISSIONS DATA SUMMARY SHEET

The FUGITIVE EMISSIONS SUMMARY SHEET provides a summation of fugitive emissions. Fugitive emissions are those emissions which could not reasonably pass through a stack, chimney, vent or other functionally equivalent opening. Note that uncaptured process emissions are not typically considered to be fugitive, and must be accounted for on the appropriate EMISSIONS UNIT DATA SHEET and on the EMISSION POINTS DATA SUMMARY SHEET.

Please note that total emissions from the source are equal to all vented emissions, all fugitive emissions, plus all other emissions (e.g. uncaptured emissions).

APPLICATION FORMS CHECKLIST - FUGITIVE EMISSIONS
1.) Will there be haul road activities? ☒ Yes ☐ No ☐ If YES, then complete the HAUL ROAD EMISSIONS UNIT DATA SHEET.
2.) Will there be Storage Piles? ■ Yes ☐ No ☐ If YES, complete Table 1 of the NONMETALLIC MINERALS PROCESSING EMISSIONS UNIT DATA SHEET.
3.) Will there be Liquid Loading/Unloading Operations? ☐ Yes ■ No ☐ If YES, complete the BULK LIQUID TRANSFER OPERATIONS EMISSIONS UNIT DATA SHEET.
4.) Will there be emissions of air pollutants from Wastewater Treatment Evaporation? ☐ Yes ■ No ☐ If YES, complete the GENERAL EMISSIONS UNIT DATA SHEET.
5.) Will there be Equipment Leaks (e.g. leaks from pumps, compressors, in-line process valves, pressure relief devices, open-ended valves, sampling connections, flanges, agitators, cooling towers, etc.)? ☐ Yes ■ No ☐ If YES, complete the LEAK SOURCE DATA SHEET section of the CHEMICAL PROCESSES EMISSIONS UNIT DATA SHEET.
6.) Will there be General Clean-up VOC Operations? ☐ Yes ■ No ☐ If YES, complete the GENERAL EMISSIONS UNIT DATA SHEET.
7.) Will there be any other activities that generate fugitive emissions? ☐ Yes ■ No ☐ If YES, complete the GENERAL EMISSIONS UNIT DATA SHEET or the most appropriate form.
If you answered "NO" to all of the items above, it is not necessary to complete the following table, "Fugitive Emissions Summary."

FUGITIVE EMISSIONS SUMMARY	All Regulated Pollutants - Chemical Name/CAS [1]	Maximum Potential Uncontrolled Emissions [2]		Maximum Potential Controlled Emissions [3]		Est. Method Used [4]
		lb/hr	ton/yr	lb/hr	ton/yr	
Haul Road/Road Dust Emissions Paved Haul Roads	**Particulate Matter**					**MB**
Unpaved Haul Roads	**Particulate Matter**	**230.03**	**184.02**	**69.01**	**55.21**	**MB**
Storage Pile Emissions	**Particulate Matter**	**0.57**	**2.48**	**0.14**	**0.62**	**MB**
Loading/Unloading Operations						
Wastewater Treatment Evaporation & Operations						
Equipment Leaks		Does not apply		Does not apply		
General Clean-up VOC Emissions						
Other						

[1] List all regulated air pollutants. Speciate VOCs, including all HAPs. Follow chemical name with Chemical Abstracts Service (CAS) number. LIST Acids, CO, CS_2, VOCs, H_2S, Inorganics, Lead, Organics, O_3, NO, NO_2, SO_2, SO_3, etc. DO NOT LIST CO_2, H_2, H_2O, N_2, O_2, and Noble Gases.
[2] Give rate with no control equipment operating. If emissions occur for less than 1 hr, then record emissions per batch in minutes (e.g. 5 lb VOC/20 minute batch).
[3] Give rate with proposed control equipment operating. If emissions occur for less than 1 hr, then record emissions per batch in minutes (e.g. 5 lb VOC/20 minute batch).
[4] Indicate method used to determine emission rate as follows: MB = material balance; ST = stack test (give date of test); EE = engineering estimate; O = other (specify).

Attachment L
FUGITIVE EMISSIONS FROM UNPAVED HAULROADS

UNPAVED HAULROADS (including all equipment traffic involved in process, haul trucks, endloaders, etc.)

		PM	PM-10
k =	Particle size multiplier	**0.80**	**0.36**
s =	Silt content of road surface material (%)	**10**	**10**
p =	Number of days per year with precipitation >0.01 in.	**157**	**157**

Item Number	Description	Number of Wheels	Mean Vehicle Weight (tons)	Mean Vehicle Speed (mph)	Miles per Trip	Maximum Trips per Hour	Maximum Trips per Year	Control Device ID Number	Control Efficiency (%)
1	**Rock out 640,000**	**10**	**25**	**15**	**1**	**16**	**25600**	**HR-WS**	**70**
2	**Endloaders 640 000**	**4**	**20**	**5**	**0.01**	**20**	**32000**	**HR-WS**	**70**
3									
4									
5									
6									

Source: *AP-42 Fifth Edition – 13.2.2 Unpaved Roads*

$E = k \times 5.9 \times (s \div 12) \times (S \div 30) \times (W \div 3)^{0.7} \times (w \div 4)^{0.5} \times ((365 - p) \div 365) =$ lb/Vehicle Mile Traveled (VMT)

Where:

		PM	PM-10
k =	Particle size multiplier	**0.80**	**0.36**
s =	Silt content of road surface material (%)	**10**	**10**
S =	Mean vehicle speed (mph)	**5**	**5**
W =	Mean vehicle weight (tons)	**40**	**40**
w =	Mean number of wheels per vehicle	**4/2**	**4/2**
p =	Number of days per year with precipitation >0.01 in.	**157**	**157**

For lb/hr: [lb ÷ VMT] × [VMT ÷ trip] × [Trips ÷ Hour] = lb/hr

For TPY: [lb ÷ VMT] × [VMT ÷ trip] × [Trips ÷ Hour] × [Ton ÷ 2000 lb] = Tons/year

SUMMARY OF UNPAVED HAULROAD EMISSIONS

Item No.	PM				PM-10			
	Uncontrolled		Controlled		Uncontrolled		Controlled	
	lb/hr	TPY	lb/hr	TPY	lb/hr	TPY	lb/hr	TPY
1	**227.49**	**181.99**	**68.25**	**54.60**	**47.85**	**38.28**	**14.35**	**11.48**
2	**2.54**	**2.03**	**0.76**	**0.61**	**0.55**	**0.44**	**0.16**	**0.13**
3								
4								
5								
6								
TOTALS	**230.03**	**184.02**	**69.01**	**55.21**	**48.39**	**38.71**	**14.52**	**11.61**

FUGITIVE EMISSIONS FROM PAVED HAULROADS

INDUSTRIAL PAVED HAULROADS (including all equipment traffic involved in process, haul trucks, endloaders, etc.)

I =	Industrial augmentation factor (dimensionless)	**1**
n =	Number of traffic lanes	**2**
s =	Surface material silt content (%)	**9**
L =	Surface dust loading (lb/mile)	**13300**

Item Number	Description	Mean Vehicle Weight (tons)	Miles per Trip	Maximum Trips per Hour	Maximum Trips per Year	Control Device ID Number	Control Efficiency (%)
1							
2							
3							
4							
5							
6							
7							
8							

Source: *AP-42 Fifth Edition – 11.2.6 Industrial Paved Roads*

$E = 0.077 \times I \times (4 \div n) \times (s \div 10) \times (L \div 1000) \times (W \div 3)^{0.7} =$ lb/Vehicle Mile Traveled (VMT)

Where:

I =	Industrial augmentation factor (dimensionless)	**1**
n =	Number of traffic lanes	**2**
s =	Surface meterial silt content (%)	**3**
L =	Surface dust loading (lb/mile)	**5**
W =	Average vehicle weight (tons)	**50**

For lb/hr: [lb ÷ VMT] × [VMT ÷ trip] × [Trips ÷ Hour] = lb/hr

For TPY: [lb ÷ VMT] × [VMT ÷ trip] × [Trips ÷ Hour] × [Ton ÷ 2000 lb] = Tons/year

SUMMARY OF PAVED HAULROAD EMISSIONS

Item No.	Uncontrolled		Controlled	
	lb/hr	TPY	lb/hr	TPY
1				
2				
3				
4				
5				
6				
7				
8				
TOTALS				

ATTACHMENT M

DESCRIPTION OF FUGITIVE EMISSIONS

Potential sources of fugitive particulate emissions for this facility include emissions, which are not captured by pollution control equipment and emissions from open stockpiles and vehicular traffic on approximately 1 mile unpaved haulroads and unpaved work areas. The haulroads and work areas will be controlled by water truck from associated surface mine.

The water truck is equipped with pumps sufficient to maintain haulroads and work areas. The water truck will be operated three times daily, and more as needed in dry periods.

An additive to prevent freezing will be utilized in the winter months when freezing conditions are present.

ENGINE DATA SHEET

Source Identification Number[1]		E-1					
Engine Manufacturer and Model		Scania					
Manufacturer's Rated bhp/rpm		1800					
Source Status[2]		NS					
Date Installed/Modified/Removed (Month/Year)[3]		April 2011					
Engine Manufactured/Reconstruction Date[4]		April 2011					
Is this a Certified Stationary Spark Ignition Engine according to 40CFR60 Subpart IIII? (Yes or No)[5]		Yes					
Is this a Certified Stationary Spark Ignition Engine according to 40CFR60 Subpart JJJJ? (Yes or No)[6]		No					
Engine, Fuel and Combustion Data	Engine Type	4 Stroke					
	APCD Type[8]	SCR					
	Fuel Type[9]	Diesel					
	H_2S (gr/100 scf)	N/A					
	Operating bhp/rpm	N/A					
	BSFC (Btu/bhp-hr)	N/A					
	Fuel throughput (ft^3/hr)	15.6					
	Fuel throughput ($MMft^3$/yr)	24,960 GPY					
	Operation (hrs/yr)	1600					
Reference[10]	Potential Emissions[11]	lbs/hr	tons/yr				
	NO_X	8.5250	6.82				
	CO	1.8370	1.470				
	VOC	0.6793	0.543				
	SO_2	0.5638	0.451				
	PM_{10}	0.6050	0.484				
	Formaldehyde	0.00248	0.001987				

1. Enter the appropriate Source Identification Number for each reciprocating internal combustion compressor/generator engine located at the facility. Multiple compressor engines should be designated CE-1, CE-2, CE-3 etc. Emergency Generator engines should be designated EG-1, EG-2, EG-3 etc. If more than three (3) engines exist, please use additional sheets.

2. Enter the Source Status using the following codes:

   NS Construction of New Source (installation) ES Existing Source

MS Modification of Existing Source RS Removal of Source

3. Enter the date (or anticipated date) of the engine's installation (construction of source), modification or removal.

4. Enter the date that the engine was manufactured, modified or reconstructed.

5. Is the engine a certified stationary compression ignition internal combustion engine according to 40CFR60 Subpart IIII. If so, the engine and control device must be operated and maintained in accordance with the manufacturer's emission-related written instructions. You must keep records of conducted maintenance to demonstrate compliance, but no performance testing is required. If the certified engine is not operated and maintained in accordance with the manufacturer's emission-related written instructions, the engine will be considered a non-certified engine and you must demonstrate compliance according to 40CFR§60.4210 as appropriate.

   Provide a manufacturer's data sheet for all engines being registered.

6. Is the engine a certified stationary spark ignition internal combustion engine according to 40CFR60 Subpart JJJJ. If so, the engine and control device must be operated and maintained in accordance with the manufacturer's emission-related written instructions. You must keep records of conducted maintenance to demonstrate compliance, but no performance testing is required. If the certified engine is not operated and maintained in accordance with the manufacturer's emission-related written instructions, the engine will be considered a non-certified engine and you must demonstrate compliance according to 40CFR§60.4243a(2)(i) through (iii), as appropriate.

   Provide a manufacturer's data sheet for all engines being registered.

7. Enter the Engine Type designation(s) using the following codes:

LB2S	Lean Burn Two Stroke	RB4S	Rich Burn Four Stroke
LB4S	Lean Burn Four Stroke		

8. Enter the Air Pollution Control Device (APCD) type designation(s) using the following codes:

A/F	Air/Fuel Ratio	IR	Ignition Retard
HEIS	High Energy Ignition System	SIPC	Screw-in Precombustion Chambers
PSC	Prestratified Charge	LEC	Low Emission Combustion
NSCR	Rich Burn & Non-Selective Catalytic Reduction	SCR	Lean Burn & Selective Catalytic Reduction

9. Enter the Fuel Type using the following codes:

PQ	Pipeline Quality Natural Gas	RG	Raw Natural Gas
2FO	#2 Fuel Oil	LPG	Liquid Propane Gas

10. Enter the Potential Emissions Data Reference designation using the following codes. Attach all referenced data to this *Compressor/Generator Data Sheet(s)*.

MD	Manufacturer's Data	AP	AP-42	
GR	GRI-HAPCalc™	OT	Other _____	(please list)

11. Enter each engine's Potential to Emit (PTE) for the listed regulated pollutants in pounds per hour and tons per year. PTE shall be calculated at manufacturer's rated brake horsepower and may reflect reduction efficiencies of listed Air Pollution Control Devices. Emergency generator engines may use 500 hours of operation when calculating PTE. PTE data from this data sheet shall be incorporated in the *Emissions Summary Sheet.*

STORAGE TANK DATA SHEET

Source ID #[1]	Status[2]	Content[3]	Volume[4]	Dia[5]	Throughput[6]	Orientation[7]	Liquid Height[8]
T1	Exist	Diesel	1,000	4	8,000	HORZ	

1. Enter the appropriate Source Identification Numbers (Source ID #) for each storage tank located at the facility. Tanks should be designated T01, T02, T03, etc.
2. Enter storage tank Status using the following:

   EXIST Existing Equipment
   NEW Installation of New Equipment
   REM Equipment Removed
3. Enter storage tank content such as condensate, pipeline liquids, glycol (DEG or TEG), lube oil, etc.
4. Enter storage tank volume in gallons.
5. Enter storage tank diameter in feet.
6. Enter storage tank throughput in gallons per year.
7. Enter storage tank orientation using the following:

   VERT Vertical Tank
   HORZ Horizontal Tank
8. Enter storage tank average liquid height in feet.

EMISSION SUMMARY SHEET FOR CRITERIA POLLUTANTS

						Registration Number (Agency Use) Pending				
	Potential Emissions (lbs/hr)					Potential Emissions (tons/yr)				
Source ID No.	NO_X	CO	VOC	SO_2	PM_{10}	NO_X	CO	VOC	SO_2	PM_{10}
Scania DC09	8.5250	1.8370	0.6793	0.5638	0.6050	6.82	1.470	0.543	0.451	0.484
Total Uncontrolled	8.5250	1.8370	0.6793	0.5638	0.6050	6.82	1.470	0.543	0.451	0.484

Source ID No.	Benzene	Acetaldehyde	Toluene	Xylenes	Formalde-hyde	Benzene	Acetaldehyde	Toluene	Xylenes	Formalde-hyde
Scania DC09	0.00196	0.00161	0.00086	0.0006	0.00248	0.001571	0.001291	0.000689	0.00048	0.001987
	Acrolein	Naphthalene				Acrolein	Naphthalene			
	0.00019	0.00018				0.000156	0.000143			

HAP TOTALS: 0.00798 lb/hour 0.006381 TPY

HIGHLAND MINING COMPANY
Rock Crusher - Scania DC09 Engine **ID: Pending**

('ERIA POLLUTANTS

AP-42 5th Edition Section 3.3 Gasoline and Diesel Industrial Engines (10/96) - Table 3.3-1 for Diesel Fuel

	202	**kW**
Diesel Fuel Engine	**275**	**hp**
Max. Hours of Operation (8 hrs/day, 5 days/week, 26 weeks/year)	**1600**	**hrs/year**
Heating Value for diesel	**128700**	**Btu/gal**

E (hourly) = Emission Factor (lb/hp-hr) * Horse Power (hp)
E (annual) = Emission Factor (lb/hp-hr) * Horse Power (hp) * Maximum Hours of Operation * 1 ton per 2000 lb

Pollutant		**Emission Factor (lb/hp-hr)**	**Emission Factor (lb/MMBtu)**	**Rating**	**lb/hour**	**TPY**
NOx	AP42	0.03100	4.41	D	8.5250	6.820
CO	AP42	0.00668	0.95	D	1.8370	1.470
SOx	AP42	0.00205	0.29	D	0.5638	0.451
PM/PM10	AP42	0.00220	0.31	D	0.6050	0.484
TOC	AP42	0.00247	0.35	D	0.6793	0.543

HAZARDOUS AIR POLLUTANTS

/ 2 5th Edition Section 3.3 Gasoline and Diesel Industrial Engines (10/96) - Table 3.3-2
45CSR30 Table 45-30A Hazardous Air Pollutants

Diesel Fuel Engine	**275**	**hp**	
aximum Hours of Operation (8 hrs/day, 5 days/week, 26 weeks/year)	**1600**	**hours/year**	
cation, based on EPA WebFIRE/AP-42 3.4-1 assumptions on diesel	**19000**	**Btu/lb**	
	7.1	**lb/gal**	
Heating Value for diesel	**134900**	**BTU/US gal**	
Maximum diesel usage at 1800 rpm	**15.6**	**gal/hour**	
	see CAT Fuel Consumption		

E (hourly) = Emission Factor (lb/hp-hr) * Horse Power (hp)
E (annual) = Emission Factor (lb/hp-hr) * Horse Power (hp) * Maximum Hours of Operation * 1 ton per 2000 lb

CAS NO.		Emission Factor (lb/MMBtu)	Rating	lb/hour	TPY
71-43-2	Benzene	0.000933	E	0.00196	0.001571
108-88-3	Toluene	0.000409	E	0.00086	0.000689
	Xylenes	0.000285	E	0.0006	0.00048
	1,3-Butadiene	0.0000391	E	8.2E-05	6.58E-05
50-00-0	Formaldehyde	0.00118	E	0.00248	0.001987
	Acetaldehyde	0.000767	E	0.00161	0.001291
	Acrolein	0.0000925	E	0.00019	0.000156
91-20-3	Naphthalene	0.0000848	E	0.00018	0.000143
	Burning diesel fuel:		***Total HAPs***	**0.00798**	**0.006381**
				lb/hour	**TPY**

INPUTS

Include all information for each emission source and transfer point as listed in the permit application.

Name of applicant: HIGHLAND MINING
Name of plant: Rock Crusher
December 2016

1. CRUSHING AND SCREENING *(including all primary and secondary crushers and screens)*

1a. PRIMARY CRUSHING

Primary Crusher ID Number	Description	Maximum Material Processing Capacity		Control Device ID Number	Control Efficiency %
		TPH	TPY		
CR-01	CRUSHER	400	640,000	FE	80

1b. SECONDARY AND TERTIARY CRUSHING

Secondary & Tertiary Crusher ID	Description	Maximum Material Processing Capacity		Control Device ID Number	Control Efficiency %
		TPH	TPY		

1c. SCREENING

Secondary & Tertiary Crusher ID	Description	Maximum Material Processing Capacity		Control Device ID Number	Control Efficiency %
		TPH	TPY		
SS-01	Power Screen	400	640,000	PW	80

2. TRANSFER POINTS (including all conveyor transfer points, equipment transfer points etc.)

		PM	PM-10
k =	Particle Size Multiplier (dimensionless)	0.0029	0.0014
U =	Mean Wind Speed (mph)	7	

Transfer Point ID No.	Transfer Point Description Include ID Numbers of all conveyors, crushers, screens, stockpiles, etc. involved	Material Moisture Content %	Maximum Transfer Rate TPH	Maximum Transfer Rate TPY	Control Device ID Number	Control Efficiency %
TP-01	Overburden Area to BS-01	3	400	640,000	UD-MDH	0
TP-02	BS-01 to BC-01	3	400	640,000	TC-PE	50
TP-03	BC-01 to SS-01	3	400	640,000	TC-PW	80
TP-04	SS-01 to BC-02	3	400	640,000	TC-FE	80
TP-05	BC-02 to OS-01	3	400	640,000	TC-MDH	0
TP-06	OS-01 to Truck	3	400	640,000	LO-MDH	0
TP-07	SS-01 to BC-03	3	400	640,000	TC-FE	80
TP-08	BC-03 to OS-02	3	400	640,000	TC-MDH	0
TP-09	OS-02 to Truck	3	400	640,000	LO-MDH	0
TP-10	SS-01 to BC-04	3	400	640,000	TC-FE	80
TP-11	BC-04 to BS-02	3	400	640,000	TC-PW	80
TP-12	BS-02 to BC-05	3	400	640,000	TC-PE	50
TP-13	BC-05 to CR-01	3	400	640,000	TC-FE	80
TP-14	CR-01 to BC-06	3	400	640,000	TC-FE	80
TP-15	BC-06 to OS-03	3	400	640,000	TC-MDH	0
TP-16	OS-03 to Truck	3	400	640,000	LO-MDH	0
TP-17	CR-01 to BC-07	3	400	640,000	TC-FE	80
TP-18	BC-07 to OS-04	3	400	640,000	TC-MDH	0
TP-19	OS-04 to Truck	3	400	640,000	LO-MDH	0
TP-20	CR-01 to BC-08	3	400	640,000	TC-FE	80
TP-21	BC-08 to OS-05	3	400	640,000	TC-MDH	0
TP-22	OS-05 to Truck	3	400	640,000	LO-MDH	0

3. WIND EROSION OF STOCKPILES (including all stockpiles of raw coal, clean coal, coal refuse, etc.)

p =	number of days per year with precipitation >0.01 inch	157
f =	percentage of time that the unobstructed wind speed	20
	exceeds 12 mph at the mean pile height	

Source ID No.	Stockpile Description	Silt Content of Material %	Stockpile base area Max. sqft	Control Device ID Number	Control Efficiency %
OS-01	1" stone	10	8,869	SW-WS	75
OS-02	2" Stone	10	8,869	SW-WS	75
OS-03	1" stone	10	8,869	SW-WS	75
OS-04	2" Stone	10	8,869	SW-WS	75
OS-05	3" stone	10	8,869	SW-WS	75

4. UNPAVED HAULROADS (including all equipment traffic involved in process, haul trucks, endloaders, etc.)

s =	silt content of road surface material (%)	10
p =	number of days per year with precipitation >0.01 inch	157
M_{dry} =	surface material moisture content (%) - dry conditions	0.2

Item Number	Description	Number of wheels	Mean Vehicle Weight(tons)	Mean Vehicle Speed (mph)	Miles per Trip	Maximum Trips Per Hour	Maximum Trips Per Year	Control Device ID Number	Control Efficiency %
1									
2	Rock Out 640000	10	25	15	1	16	25,600	HR-WS	70
3	Endloader 640000	4	20	5	0.01	20	32,000	HR-WS	70
4									
5									
6									
7									
8									

5. INDUSTRIAL PAVED HAULROADS (including all equipment traffic involved in process, haul trucks, endloaders, etc.)

sL =	road surface silt loading, (g/m^2)	70
P =	number of days per year with precipitation >0.01 inch	157

Item Number	Description	Mean Vehicle Weight (tons)	Miles per Trip	Maximum Trips Per Hour	Maximum Trips Per Year	Control Device ID Number	Control Efficiency %
1							
2							
3							
4							
5							
6							
7							
8							

EMISSIONS SUMMARY

Name of applicant: HIGHLAND MINING
Name of plant: Rock Crusher

Particulate Matter or PM (for 45CSR14 Major Source Determination)

	Uncontrolled PM		Controlled PM	
	lb/hr	TPY	lb/hr	TPY
FUGITIVE EMISSIONS				
Stockpile Emissions	0.57	2.48	0.14	0.62
Unpaved Haulroad Emissions	230.03	184.02	69.01	55.21
Paved Haulroad Emissions	0.00	0.00	0.00	0.00
Fugitive Emissions Total	230.60	186.51	69.15	55.83
POINT SOURCE EMISSIONS				
Equipment Emissions	12.88	10.30	2.58	2.06
Transfer Point Emissions	0.07	0.06	0.04	0.04
Point Source Emissions Total*	12.95	10.36	2.62	2.10
*Note: Point Source Total Controlled PM TPY emissions is used for 45CSR14 Major Source determination (see below)				
Facility Emissions Total	243.55	196.87	71.77	57.93

***Facility Potential to Emit (PTE) (Baseline Emissions) = 2.10**

(Based on Point Source Total controlled PM TPY emissions from above) ENTER ON LINE 26 OF APPLICATION

Particulate Matter under 10 microns, or PM-10 (for 45CSR30 Major Source Determination)

	Uncontrolled PM-10		Controlled PM-10	
	lb/hr	TPY	lb/hr	TPY
FUGITIVE EMISSIONS				
Stockpile Emissions	0.27	1.17	0.07	0.29
Unpaved Haulroad Emissions	48.39	38.71	14.52	11.61
Paved Haulroad Emissions	0.00	0.00	0.00	0.00
Fugitive Emissions Total	48.66	39.88	14.58	11.91
POINT SOURCE EMISSIONS				
Equipment Emissions	6.13	4.91	1.23	0.98
Transfer Point Emissions	0.03	0.03	0.02	0.02
Point Source Emissions Total*	6.17	4.93	1.25	1.00
*Note: Point Source Total Controlled PM-10 TPY emissions is used for 45CSR30 Major Source determination				
Facility Emissions Total	54.83	44.82	15.83	12.90

1. Emissions From CRUSHING AND SCREENING

1a. Primary Crushing

Primary Crusher ID Number	PM				PM-10			
	Uncontrolled		Controlled		Uncontrolled		Controlled	
	lb/hr	TPY	lb/hr	TPY	lb/hr	TPY	lb/hr	TPY
CR-01	0.28	0.22	0.06	0.04	0.13	0.11	0.03	0.02
0	0.00	0.00	0.00	0.00	0.00	0.00	0.00	0.00
0	0.00	0.00	0.00	0.00	0.00	0.00	0.00	0.00
0	0.00	0.00	0.00	0.00	0.00	0.00	0.00	0.00
0	0.00	0.00	0.00	0.00	0.00	0.00	0.00	0.00
TOTAL	0.28	0.22	0.06	0.04	0.13	0.11	0.03	0.02

1b. Secondary and Tertiary Crushing

Secondary & Tertiary Crusher ID	PM				PM-10			
	Uncontrolled		Controlled		Uncontrolled		Controlled	
	lb/hr	TPY	lb/hr	TPY	lb/hr	TPY	lb/hr	TPY
0	0.00	0.00	0.00	0.00	0.00	0.00	0.00	0.00
0	0.00	0.00	0.00	0.00	0.00	0.00	0.00	0.00
0	0.00	0.00	0.00	0.00	0.00	0.00	0.00	0.00
0	0.00	0.00	0.00	0.00	0.00	0.00	0.00	0.00
0	0.00	0.00	0.00	0.00	0.00	0.00	0.00	0.00
0	0.00	0.00	0.00	0.00	0.00	0.00	0.00	0.00
0	0.00	0.00	0.00	0.00	0.00	0.00	0.00	0.00
0	0.00	0.00	0.00	0.00	0.00	0.00	0.00	0.00
0	0.00	0.00	0.00	0.00	0.00	0.00	0.00	0.00
0	0.00	0.00	0.00	0.00	0.00	0.00	0.00	0.00
0	0.00	0.00	0.00	0.00	0.00	0.00	0.00	0.00
0	0.00	0.00	0.00	0.00	0.00	0.00	0.00	0.00
TOTAL	0.00	0.00	0.00	0.00	0.00	0.00	0.00	0.00

1c. Screening

Screen ID Number	PM				PM-10			
	Uncontrolled		Controlled		Uncontrolled		Controlled	
	lb/hr	TPY	lb/hr	TPY	lb/hr	TPY	lb/hr	TPY
SS-01	12.60	10.08	2.52	2.02	6.00	4.80	1.20	0.96
0	0.00	0.00	0.00	0.00	0.00	0.00	0.00	0.00
0	0.00	0.00	0.00	0.00	0.00	0.00	0.00	0.00
0	0.00	0.00	0.00	0.00	0.00	0.00	0.00	0.00
0	0.00	0.00	0.00	0.00	0.00	0.00	0.00	0.00
0	0.00	0.00	0.00	0.00	0.00	0.00	0.00	0.00
0	0.00	0.00	0.00	0.00	0.00	0.00	0.00	0.00
0	0.00	0.00	0.00	0.00	0.00	0.00	0.00	0.00
0	0.00	0.00	0.00	0.00	0.00	0.00	0.00	0.00
0	0.00	0.00	0.00	0.00	0.00	0.00	0.00	0.00
0	0.00	0.00	0.00	0.00	0.00	0.00	0.00	0.00
0	0.00	0.00	0.00	0.00	0.00	0.00	0.00	0.00
0	0.00	0.00	0.00	0.00	0.00	0.00	0.00	0.00
0	0.00	0.00	0.00	0.00	0.00	0.00	0.00	0.00
0	0.00	0.00	0.00	0.00	0.00	0.00	0.00	0.00
TOTAL	12.60	10.08	2.52	2.02	6.00	4.80	1.20	0.96

Crushing and Screening	PM				PM-10			
	Uncontrolled		Controlled		Uncontrolled		Controlled	
	lb/hr	TPY	lb/hr	TPY	lb/hr	TPY	lb/hr	TPY
TOTAL	12.88	10.30	2.58	2.06	6.13	4.91	1.23	0.98

1. Emissions From CRUSHING AND SCREENING (Continued)

EMISSION FACTORS

source: AP42, Fifth Edition, Revised 01/95

(lb/ton of material throughput)

PM	
Primary Crushing	0.0007
Tertiary Crushing	0.00504
Screening	0.0315

PM-10	
Primary Crushing	0.000333
Tertiary Crushing	0.0024
Screening	0.015

2. *Emissions From TRANSFER POINTS*

Transfer Point ID No.	PM				PM-10			
	Uncontrolled		Controlled		Uncontrolled		Controlled	
	lb/hr	TPY	lb/hr	TPY	lb/hr	TPY	lb/hr	TPY
TP-01	0.00	0.00	0.00	0.00	0.00	0.00	0.00	0.00
TP-02	0.00	0.00	0.00	0.00	0.00	0.00	0.00	0.00
TP-03	0.00	0.00	0.00	0.00	0.00	0.00	0.00	0.00
TP-04	0.00	0.00	0.00	0.00	0.00	0.00	0.00	0.00
TP-05	0.00	0.00	0.00	0.00	0.00	0.00	0.00	0.00
TP-06	0.00	0.00	0.00	0.00	0.00	0.00	0.00	0.00
TP-07	0.00	0.00	0.00	0.00	0.00	0.00	0.00	0.00
TP-08	0.00	0.00	0.00	0.00	0.00	0.00	0.00	0.00
TP-09	0.00	0.00	0.00	0.00	0.00	0.00	0.00	0.00
TP-10	0.00	0.00	0.00	0.00	0.00	0.00	0.00	0.00
TP-11	0.00	0.00	0.00	0.00	0.00	0.00	0.00	0.00
TP-12	0.00	0.00	0.00	0.00	0.00	0.00	0.00	0.00
TP-13	0.00	0.00	0.00	0.00	0.00	0.00	0.00	0.00
TP-14	0.00	0.00	0.00	0.00	0.00	0.00	0.00	0.00
TP-15	0.00	0.00	0.00	0.00	0.00	0.00	0.00	0.00
TP-16	0.00	0.00	0.00	0.00	0.00	0.00	0.00	0.00
TP-17	0.00	0.00	0.00	0.00	0.00	0.00	0.00	0.00
TP-18	0.00	0.00	0.00	0.00	0.00	0.00	0.00	0.00
TP-19	0.00	0.00	0.00	0.00	0.00	0.00	0.00	0.00
TP-20	0.00	0.00	0.00	0.00	0.00	0.00	0.00	0.00
TP-21	0.00	0.00	0.00	0.00	0.00	0.00	0.00	0.00
TP-22	0.00	0.00	0.00	0.00	0.00	0.00	0.00	0.00
0	0.00	0.00	0.00	0.00	0.00	0.00	0.00	0.00
0	0.00	0.00	0.00	0.00	0.00	0.00	0.00	0.00
0	0.00	0.00	0.00	0.00	0.00	0.00	0.00	0.00
0	0.00	0.00	0.00	0.00	0.00	0.00	0.00	0.00
0	0.00	0.00	0.00	0.00	0.00	0.00	0.00	0.00
0	0.00	0.00	0.00	0.00	0.00	0.00	0.00	0.00
0	0.00	0.00	0.00	0.00	0.00	0.00	0.00	0.00
0	0.00	0.00	0.00	0.00	0.00	0.00	0.00	0.00
0	0.00	0.00	0.00	0.00	0.00	0.00	0.00	0.00
0	0.00	0.00	0.00	0.00	0.00	0.00	0.00	0.00
0	0.00	0.00	0.00	0.00	0.00	0.00	0.00	0.00
0	0.00	0.00	0.00	0.00	0.00	0.00	0.00	0.00
0	0.00	0.00	0.00	0.00	0.00	0.00	0.00	0.00
0	0.00	0.00	0.00	0.00	0.00	0.00	0.00	0.00
0	0.00	0.00	0.00	0.00	0.00	0.00	0.00	0.00
0	0.00	0.00	0.00	0.00	0.00	0.00	0.00	0.00
0	0.00	0.00	0.00	0.00	0.00	0.00	0.00	0.00
0	0.00	0.00	0.00	0.00	0.00	0.00	0.00	0.00
0	0.00	0.00	0.00	0.00	0.00	0.00	0.00	0.00
0	0.00	0.00	0.00	0.00	0.00	0.00	0.00	0.00
0	0.00	0.00	0.00	0.00	0.00	0.00	0.00	0.00
0	0.00	0.00	0.00	0.00	0.00	0.00	0.00	0.00
0	0.00	0.00	0.00	0.00	0.00	0.00	0.00	0.00
0	0.00	0.00	0.00	0.00	0.00	0.00	0.00	0.00
0	0.00	0.00	0.00	0.00	0.00	0.00	0.00	0.00
0	0.00	0.00	0.00	0.00	0.00	0.00	0.00	0.00
0	0.00	0.00	0.00	0.00	0.00	0.00	0.00	0.00
0	0.00	0.00	0.00	0.00	0.00	0.00	0.00	0.00
0	0.00	0.00	0.00	0.00	0.00	0.00	0.00	0.00
0	0.00	0.00	0.00	0.00	0.00	0.00	0.00	0.00

2. *Emissions From TRANSFER POINTS (continued)*

Transfer Point ID No.	PM				PM-10			
	Uncontrolled		Controlled		Uncontrolled		Controlled	
	lb/hr	TPY	lb/hr	TPY	lb/hr	TPY	lb/hr	TPY
0	0.00	0.00	0.00	0.00	0.00	0.00	0.00	0.00
0	0.00	0.00	0.00	0.00	0.00	0.00	0.00	0.00
0	0.00	0.00	0.00	0.00	0.00	0.00	0.00	0.00
0	0.00	0.00	0.00	0.00	0.00	0.00	0.00	0.00
TOTALS	0.07	0.06	0.04	0.04	0.03	0.03	0.02	0.02

Source:
AP-42 Fifth Edition
13.2.4 Aggregate Handling and Storage Piles

Emissions From Batch Drop

E = k*(0.0032) * [(U/5)^1.3]/[(M/2)^1.4] = pounds/ton

Where:

		PM	PM-10
k =	Particle Size Multiplier (dimensionless)	0.0029	0.0014
U =	Mean Wind Speed (mph)		
M =	Material Moisture Content (%)		

Assumptions:

k - Particle size multiplier
For PM (< or equal to 30um) k = 0.0029
For PM-10 (< or equal to 10um) k = 0.0014

For PM E(M) = 1.437E-05 *[1/((M/2)^1.4)] = pounds/ton

For PM-10 E(M) = 6.938E-06 *[1/((M/2)^1.4)] = pounds/ton

For lb/hr [lb/ton]*[ton/hr] = [lb/hr]

For Tons/year [lb/ton]*[ton/yr]*[ton/2000lb] = [ton/yr]

3. *Emissions From WIND EROSION OF STOCKPILES*

Stockpile ID No.	PM				PM-10			
	Uncontrolled		Controlled		Uncontrolled		Controlled	
	lb/hr	TPY	lb/hr	TPY	lb/hr	TPY	lb/hr	TPY
OS-01	0.11	0.50	0.03	0.12	0.05	0.23	0.01	0.06
OS-02	0.11	0.50	0.03	0.12	0.05	0.23	0.01	0.06
OS-03	0.11	0.50	0.03	0.12	0.05	0.23	0.01	0.06
OS-04	0.11	0.50	0.03	0.12	0.05	0.23	0.01	0.06
OS-05	0.11	0.50	0.03	0.12	0.05	0.23	0.01	0.06
0	0.00	0.00	0.00	0.00	0.00	0.00	0.00	0.00
0	0.00	0.00	0.00	0.00	0.00	0.00	0.00	0.00
0	0.00	0.00	0.00	0.00	0.00	0.00	0.00	0.00
0	0.00	0.00	0.00	0.00	0.00	0.00	0.00	0.00
0	0.00	0.00	0.00	0.00	0.00	0.00	0.00	0.00
0	0.00	0.00	0.00	0.00	0.00	0.00	0.00	0.00
0	0.00	0.00	0.00	0.00	0.00	0.00	0.00	0.00
TOTALS	0.57	2.48	0.14	0.62	0.27	1.17	0.07	0.29

Source:
Air Pollution Engineering Manual

Storage Pile Wind Erosion (Active Storage)

E = 1.7*[s/1.5]*[(365-p)/235]*[f/15] = (lb/day/acre)

Where:

s =	silt content of material
p =	number of days with >0.01 inch of precipitation per year
f =	percentage of time that the unobstructed wind speed
	exceeds 12 mph at the mean pile height

For PM	E(s)=	1.3374941 * s = lb/day/acre
For PM-10	E(s)=	0.6286222 * s = lb/day/acre
For lb/hr		[lb/day/acre]*[day/24hr]*[base area of pile (acres)] = lb/hr
For Ton/yr		[lb/day/acre]*[365day/yr]*[Ton/2000lb]*[base area of pile (acres)] = Ton/yr

4. Emissions From UNPAVED HAULROADS

Item No.	PM				PM-10			
	Uncontrolled		Controlled		Uncontrolled		Controlled	
	lb/hr	TPY	lb/hr	TPY	lb/hr	TPY	lb/hr	TPY
1	0.00	0.00	0.00	0.00	0.00	0.00	0.00	0.00
2	227.49	181.99	68.25	54.60	47.85	38.28	14.35	11.48
3	2.54	2.03	0.76	0.61	0.55	0.44	0.16	0.13
4	0.00	0.00	0.00	0.00	0.00	0.00	0.00	0.00
5	0.00	0.00	0.00	0.00	0.00	0.00	0.00	0.00
6	0.00	0.00	0.00	0.00	0.00	0.00	0.00	0.00
7	0.00	0.00	0.00	0.00	0.00	0.00	0.00	0.00
8	0.00	0.00	0.00	0.00	0.00	0.00	0.00	0.00
TOTALS	230.03	184.02	69.01	55.21	48.39	38.71	14.52	11.61

Source:
AP-42 9/98 Edition
13.2.2 Unpaved Roads

Emission Estimate For Unpaved Haulroads at Industrial Sites (equation 1)

$E = [(k*(s/12)^a * (W/3)^b) / ((M_{dry}/0.2)^c)] * [(365-p)/365)]$ = lb / Vehicle Mile Traveled (VMT)

Where:

		PM	PM-10
k =	particle size multiplier	10.00	2.60
a =	empirical constant	0.8	0.8
b =	empirical constant	0.5	0.4
c =	empirical constant	0.4	0.3
M_{dry} =	surface material moisture content (%) - dry conditions	0.2	
p =	number of days with at least 0.01 inches of precipitation	157	
s =	silt content of road surface material (%)	10	
W =	Mean vehicle weight (tons)		

5. *Emissions From INDUSTRIAL PAVED HAULROADS*

Item No.	PM				PM-10			
	Uncontrolled		Controlled		Uncontrolled		Controlled	
	lb/hr	TPY	lb/hr	TPY	lb/hr	TPY	lb/hr	TPY
1	0.00	0.00	0.00	0.00	0.00	0.00	0.00	0.00
2	0.00	0.00	0.00	0.00	0.00	0.00	0.00	0.00
3	0.00	0.00	0.00	0.00	0.00	0.00	0.00	0.00
4	0.00	0.00	0.00	0.00	0.00	0.00	0.00	0.00
5	0.00	0.00	0.00	0.00	0.00	0.00	0.00	0.00
6	0.00	0.00	0.00	0.00	0.00	0.00	0.00	0.00
7	0.00	0.00	0.00	0.00	0.00	0.00	0.00	0.00
8	0.00	0.00	0.00	0.00	0.00	0.00	0.00	0.00
TOTALS	0.00	0.00	0.00	0.00	0.00	0.00	0.00	0.00

Source:
AP-42 10/01 Edition
13.2.1 PAVED ROADS

Emission Estimate For Paved Haulroads

E = k * [sL/2]^0.65 * [W/3]^1.5 * [1 - (P / (2*N)] = lb / Vehicle Mile Traveled (VMT)

Where:

		PM	PM-10
k =	particle size multiplier	0.082	0.016
sL =	road surface silt loading, (g/m^2)	70	
P =	number of days per year with precipitation >0.01 inch	157	
N =	number of days in averaging period	365	
W =	average vehicle weight, (ton)		

Attachment O

Monitoring, Recordkeeping, Reporting, and Testing

The owner/operator will comply with all monitoring, recordkeeping, reporting, and testing as required in 40CFR60 Subpart OOO as described in the governing permit document.

Legal Advertisement

AIR QUALITY PERMIT NOTICE
Notice of Application

Notice is given that Highland Mining Company has applied to the West Virginia Department of Environmental Protection, Division of Air Quality, for a Reg. 13 Temporary Permit to construct and operate a rock crusher/screening facility at Highland Surface Mine, near Ethel in Logan County, West Virginia. The facility coordinates are as follows: latitude 37.881111 and longitude –81.874167.

The applicant estimates the potential to discharge the following Regulated Air Pollutants from the diesel combustion engine will be: criteria pollutants for the engine is estimated to be: NOx 6.820 tons per year, CO 1.47 tons per year, VOC 0.543 tons per year, SOx 0.451 tons per year and PM10 0.484 tons per year. The potential to emit hazardous pollutants from the engine is estimated to be: Benzene 0.0001571 tons per year, Toluene 0.000689 tons per year, Xylene 0.00048 tons per year, Acetaldehyde 0.001291 tons per year, Acrolein 0.000156 tons per year, Naphthalene 0.000143 tons per year and Formaldehyde 0.001987 tons per year.

The applicant estimates the potential to discharge the following Regulated Air Pollutants associated with the operation of the crushing/screening plant will be: facility particulate matter potential to emit baseline emissions of 2 tons per year, particulate matter less than 10 microns emissions total of 1 tons per year and particulate matter facility emissions total of 58 tons per year.

Startup of operation is planned to begin upon permit approval. Written comments will be received by the West Virginia Department of Environmental Protection, Division of Air Quality, 601 57th Street, SE, Charleston, WV 25304, for at least 30 calendar days from the date of publication of this notice.

Any questions regarding this permit application should be directed to the DAQ at (304) 926-0499, extension 1250, during normal business hours.

Dated this the 12th day January 2017

By: Highland Mining Company
Gary Goff, President
PO Box 1098
Holden, WV 25625

Joe R. Dotson

From: Samual Daniels
Sent: Friday, September 11, 2015 7:45 AM
To: Joe R. Dotson
Cc: Ray Daugherty
Subject: info for crusher

MAKE-POWERSCREEN
MODEL XR400S
YEAR 2011
MASS 44,700kg
PIDXR40SJ0MB42649

ENGINE
SCANIA ENGINE
CV AB
ENGINE FAMILY-BY9XL127CAA
9.3L DISPLACEMENT
YEAR 04/2011
EMISSION CONTROL-SCR

Sam Daniels
Purchasing Clerk
Superior Surface
Fax:276-739-8442
Phone:304-946-2334

UNITED STATES ENVIRONMENTAL PROTECTION AGENCY
2012 MODEL YEAR
CERTIFICATE OF CONFORMITY
WITH THE CLEAN AIR ACT OF 1990

OFFICE OF TRANSPORTATION AND AIR QUALITY
ANN ARBOR, MICHIGAN 48105

Certificate Issued To: Scania CV AB
(U.S. Manufacturer or Importer)
Certificate Number: CY9XL12.7CAA-001

Effective Date: 01/13/2012

Byron J. Bunker, Acting Division Director
Compliance Division

Issue Date: 01/13/2012
Revision Date: N/A

Model Year: 2012
Manufacturer Type: Original Engine Manufacturer
Engine Family: CY9XL12.7CAA

Mobile/Stationary Indicator: Mobile
Emissions Power Category: 130<kW<=560
Fuel Type: Diesel
After Treatment Devices: Selective Catalytic Reduction, Ammonia Slip Catalyst
Non-after Treatment Devices: Electronic Control

Pursuant to Section 213 of the Clean Air Act (42 U.S.C. section 7547) and 40 CFR Part 1039, and subject to the terms and conditions prescribed in those provisions, this certificate of conformity is hereby issued with respect to the test engines which have been found to conform to applicable requirements and which represent the following engines, by engine family, more fully described in the documentation required by 40 CFR Part 1039 and produced in the stated model year.

This certificate of conformity covers only those new compression-ignition engines which conform in all material respects to the design specifications that applied to those engines described in the documentation required by 40 CFR Part 1039 and which are produced during the model year stated on this certificate of the said manufacturer, as defined in 40 CFR Part 1039.

It is a term of this certificate that the manufacturer shall consent to all inspections described in 40 CFR 1068 and authorized in a warrant or court order. Failure to comply with the requirements of such a warrant or court order may lead to revocation or suspension of this certificate for reasons specified in 40 CFR Part 1039. It is also a term of this certificate that this certificate may be revoked or suspended or rendered void *ab initio* for other reasons specified in 40 CFR Part 1039.

This certificate does not cover engines sold, offered for sale, or introduced, or delivered for introduction, into commerce in the U.S. prior to the effective date of the certificate.

Specification and Plant Information

Crusher Capacity

1. In order to obtain the optimum output from the crusher, it's feed should be continuous and regulated. Additionally, all feed should be of a size that will readily enter the crusher chamber and, in order to avoid packing of the discharge opening and excessive wear of the plant jaws, under size material should be removed from the feed prior to entry to the crusher.

Setting Range + Typical Output	
A* : (2in*	160 US tons/hour)
B* : (2.5in*	180 US tons/hour)
C : (3in	210 US tons/hour)
D : (4in	245 US tons/hour)
E : (5in	280 US tons/hour)

Setting Range + Typical Output	
A* : 50mm*	140 tonnes/hour
B* : 63mm*	160 tonnes/hour
C : 75mm	185 tonnes/hour
D : 100mm	220 tonnes/hour
E : 125mm	250 tonnes/hour

2. The discharge rates given are based on crushing clean, dry limestone weighing approximately 1600kg/m³ (100lbs/ft³) loose and having a specific gravity of 2.6. Wet feed material reduces the crusher discharge rate.
3. Closed jaw settings A* and B* are for re-cycling operations only. The crusher must not be operated at a discharge opening less than 75mm (3 inches) for quarry applications without prior consultation with Powerscreen®.
4. The only exception to this being for crushing bricks and demolition materials. Operating the crusher below this setting may result in extensive damage.

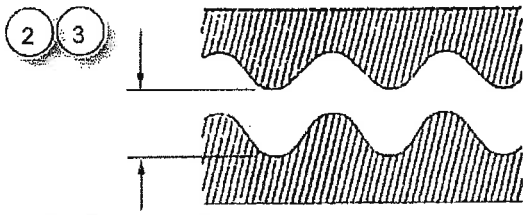

A* - B* - C - D - E

NOTICES

On the XR model, DO NOT feed non crushable material larger than 200mm (8 inches) into the Hydraulic Release Jaw Crusher as serious damage may result.

On the XA model DO NOT feed non

Specification and Plant Information

Dimensions

Working Dimensions

All dimensions are in millimetres.

(Approximate dimensions in Feet - Inches)

Feed Hopper Raised

Product Conveyor Fully Raised

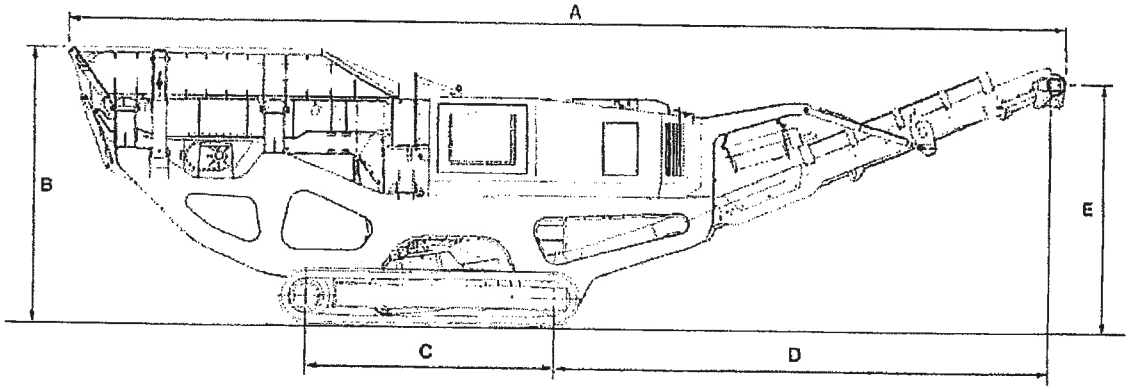

A 14935mm	A (49ft)
B 4133mm	B (13ft-7in)
C 3715mm	C (12ft-2in)
D 7430mm	D (24ft-5in)
E 3725mm	E (12ft-3in)
F 4420mm	F (14ft-6in)

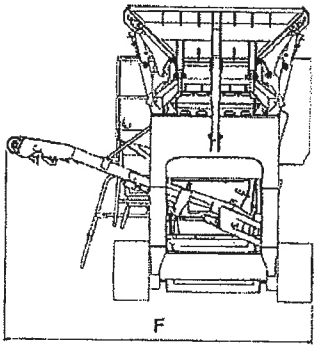

Transport Dimensions

Overall Length - 15000mm with product conveyor lowered

Overall Width - 2800mm with dirt conveyor folded

Overall Height [Excluding Transport Trailer] 3440mm with feed hopper, feed chute grid and product conveyor all lowered.

Transport Dimensions

Overall Length - (49ft-2in) with product conveyor lowered

Overall Width - (9ft-2in) with dirt conveyor folded

Overall Height [Excluding Transport Trailer] (11ft-4in) with feed hopper, feed chute grid and product conveyor all lowered.

11901 Westport Road | Louisville, KY 40245 | Phone 1-800-227-0534

JAW CRUSHERS

POWERSCREEN XA400S XR400S

INQUIRE ABOUT THIS MACHINE (/CONTACT-US)

REQUEST A MANUAL (/CUSTOMER-SUPPORT)

SPECIFICATIONS

	Powerscreen XA400S	Powe
Weight (Est)	44,750kgs (98,656lbs)	44 (98
Transport Width	2.8m (9'2")	2.8
Transport Length	15.2m (49'10")	15.2m
Transport Height	3.4m (11'2")	3.4
Working Width	4.3m (14'1")	4.3
Working Length	15m (49'3")	15
Working Height	4.1m (13'5")	4.1

INTRODUCTION

The Powerscreen® X400S range of high performance primary jaw crushing plants are designed for medium scale operators in quarrying, demolition, recycling and mining applications.

The range includes the XA400S with hydraulic adjust and the XR400S with hydraulic release. User benefits incluc mobility for a quick set-up time (typically under 30 minutes), hydraulic crusher setting adjustment for total control c product size and crusher overload protection to prevent damage by uncrushable objects.

FEATURES & BENEFITS

- Output Potential: up to 400tph (441 US tph)
- Excellent reduction capability
- Hydraulic folding feed hopper with boltless fixing system
- Excellent under crusher access with a hydraulic tilting conveyor system
- Economical to operate with a highly efficient direct drive system
- Forceful crushing action with high swing jaw
- Height adjustable product conveyor
- Extended hopper – hydraulically folding

OPTIONS

- Deflector plate under crusher
- Dirt conveyor
- Single pole/ twin pole magnet
- Radio remote control
- Belt weigher
- Engine fire extinguisher system
- Electric refuelling pump
- Hydraulic water pump
- Underscreen wire mesh: 10, 20, 30, 40 or 50mm

Click here (http://www.youtube.com/user/Powerscreens/videos) to watch our machines action.

Crushers (/crushers/)

Jaw Crushers (/crushers/jaw-crushers/)

Impact Crushers
(/crushers/impact-crushers/)

Cone Crushers
(/crushers/cone-crushers/)

Screeners (/mobile-screening/)

Parts (/parts/)

Used Equipment (/used-equipment/)

Customer Support (/customer-support/)

(HTTP://GTRANSLATE.NET/?XYZ=1108)

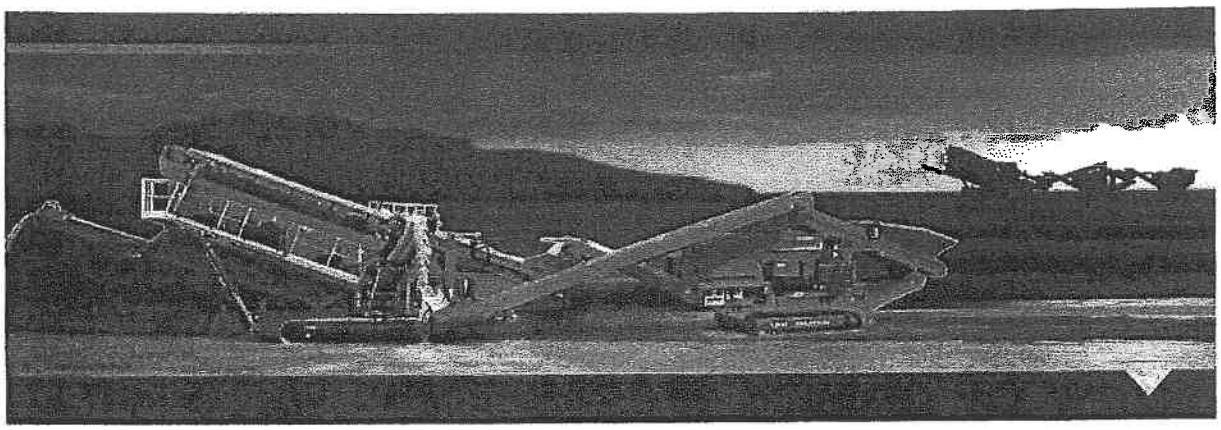

Tier 4i Scania DC9 & DC13

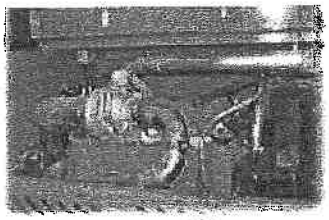

Powerscreen Jaw & Impact Crusher Average Fuel Consumption Comparisons

1.5 inches + gallons

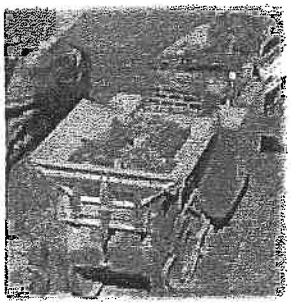

XA400S - Scania DC9 Tier 4i 202kW
Medium Hard Limestone Site, Gloucester, UK
Serial # PIDXA40SCOMA40017

3.5" — CSS: 90mm
24" — Feed Material: -600mm Conglomerate (See page 4 for details)
5" — End Product: -120mm
Production: 180 TPH (Average)
Engine Load: 64% (Average)
4.4gph — Diesel consumption: 16.65 Litres Per Hour Average (LPH Av.)
0.4 gph — Urea consumption; 1.6 LPH Av.

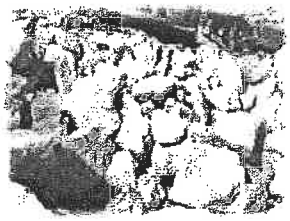

XA400S - Tier 3 CAT powered in a similar application
CSS: 90mm
Feed Material: -600mm Conglomerate (See page 4 for details)
End Product: -120mm
Production: 180 TPH (Average)
Engine Load: 64% (Average)
5.8gph — Diesel consumption: 22 LPH Av.

Conclusion:
Average Fuel Savings = 25%

POWERSCREEN.
A TEREX BRAND

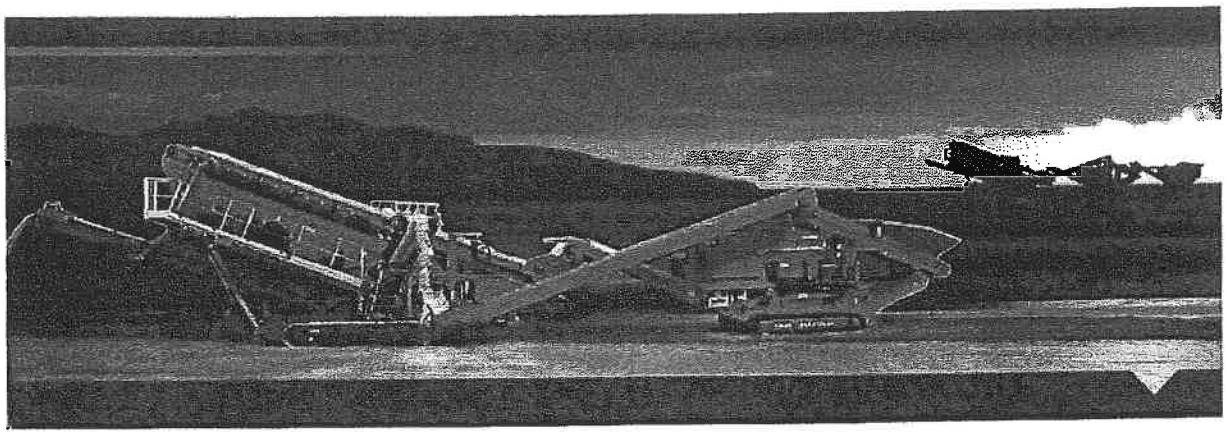

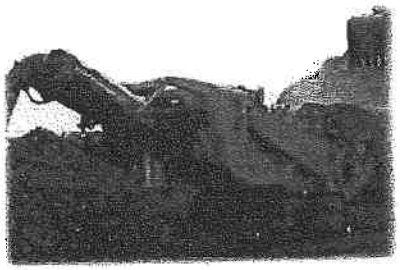

XH320 - Scania DC9 Tier 4i 202kW
Hard Limestone Site, Enniskillen, Northern Ireland
Serial # AX899-P2U
6" — Top Apron: 150mm
3" — Bottom Apron: 75mm
20" - Feed Material: -500mm Medium Limestone
5" - End Product: -120mm
Production: 300 – 350 TPH Average
Engine Load: 75% Approx.
9.4 gph — Diesel Consumption: 35.5 LPH
0.5 gph — Urea Consumption: 1.76 LPH

XH320 - Tier 3 CAT powered in a similar application
Top Apron: 150mm
Bottom Apron: 75mm
Feed Material: -500mm Medium Limestone
End Product: -120mm
Production: 300 – 350 TPH Average
Engine Load: 75% Approx.
11 gph — Diesel Consumption: 42 LPH Av.

Conclusion:
Average Fuel Saving = 15%

POWERSCREEN.
A TEREX BRAND

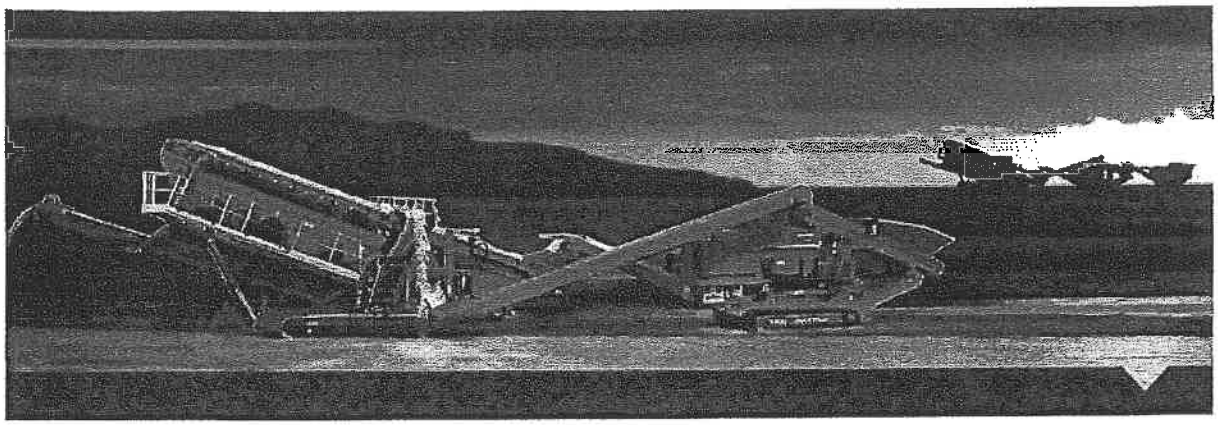

XH500SR - Scania DC13 Tier 4i 331kw
Medium Hard Limestone, Scotland
Serial # 2200002 (P2)

10" Top Apron: 250mm
4" Bottom Apron: 100mm
20" Feed Material: -500mm Limestone
5" End Product: -120mm
Production: 180 TPH Approx
Engine Load: 50% Approx
8.75gph — Diesel Consumption: 33.05 LPH Av.
0.4gph — Urea Consumption: 1.5 LPH Av.

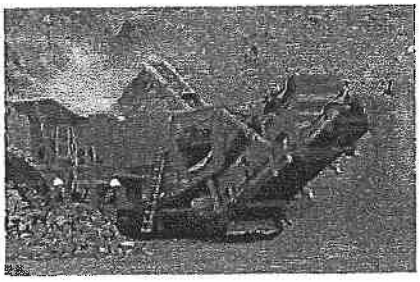

XH500 - Tier 3 CAT powered in a similar application

10" Top Apron: 250mm
Bottom Apron: 100mm
Feed Material: -500mm Limestone
End Product: -120mm
Production: 180 TPH Approx
Engine Load: 50% Approx
10.4gph — Diesel Consumption: 39.2 LPH Av.

Conclusion:
Average Fuel Saving = 18%

POWERSCREEN.
A TEREX BRAND

DC09 070A. 202 kW (275 hp)

US Tier 4i, EU Stage IIIB

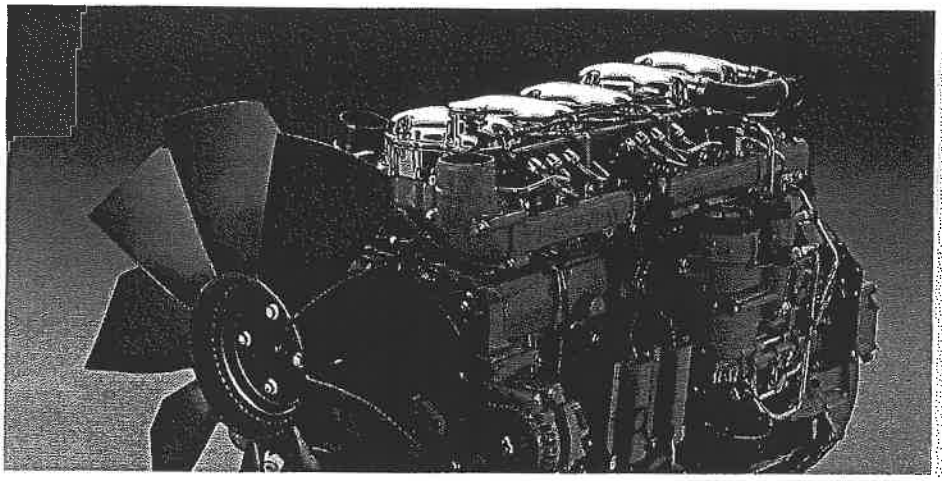

The industrial engines from Scania are based on a robust design with a strength optimised cylinder block containing wet cylinder liners that can easiliy be exchanged. Individual cylinder heads with 4 valves per cylinder promotes repairability and fuel economy.

The engine is equipped with a Scania developed Engine Management System, EMS, in order to ensure the control of all aspects related to engine performance. The injection system is Scania's XPI (Extra High Pressure Injection), a common rail system that in combination with SCR (Selective Catalytic Reduction) gives low exhaust emissions with good fuel economy and a high torque. The engine can be fitted with many accessories such as air cleaners, silencers, PTO:s and flywheels in order to suit a variety of installations.

	Rating	Engine speed (rpm)			
		1200	1500	1800	2100
Gross power (kW)	ICFN	195	202	202	202
Gross power (hp)	ICFN	265	275	275	275
Gross torque (Nm)	ICFN	1552	1286	1072	919
Spec fuel consumption. Full load (g/kWh)		193	194	204	223
Spec fuel consumption. 3/4 load (g/kWh)		193	197	209	234
Spec fuel consumption. 1/2 load (g/kWh)		198	206	223	257
Reductant consumption. Full load (g/kWh)		31	25	21	12
Heat rejection to cooling water (kW)		85	81	87	98

ICFN – Continous service: Rated output available 1/1 h.
Unlimited h/year service time at a load factor of 100%

Standard equipment
- Scania Engine Management System, EMS
- Extra high pressure fuel injection system, XPI
- Turbo charger
- Fuel filter and extra pre-filter with water separator
- Fuel heater
- Oil filter, full flow
- Centrifugal oil cleaner
- Oil cooler, integrated in block
- Oil filler, in valve cover
- Deep front oil sump
- Oil dipstick, in block
- Magnetic drain plug for oil draining
- Starter, 1-pole 5.5 kW
- Alternator, 1-pole 100A
- Flywheel, for use with friction clutch
- Silumin flywheel housing, SAE 1 flange
- Front mounted engine brackets
- SCR system
- Open crankcase ventilation
- Operator's manual

Optional equipment
- Cooling package
- Puller and pusher fans
- Fan ring with sealing
- Hydraulic pump
- Air compressor
- AC compressor
- Side mounted PTO
- Front mounted PTO
- Exhaust connections
- Electrical base system
- Control and instrument panels
- Accelerator position sensor
- Engine heater
- Flywheels: SAE11.5", SAE14", DANA15/16", DANA17" flexplate, ZF WG260
- Stiff rubber engine suspension
- Air cleaner
- Closed crankcase ventilation
- Studs in flywheel housing
- External thermostat for extra oil cooler
- Low coolant level reaction
- Variable idle speed setting
- Low oil sump
- Oil level sensor

DC09 070A. 202 kW (275 hp)

US Tier 4i, EU Stage IIIB

Engine description

No of cylinders	5 in-line
Working principle	4-stroke
Firing order	1 - 2 - 4 - 5 - 3
Displacement	9.3 litres
Bore x stroke	130 x 140 mm
Compression ratio	16:1
Weight	950 kg (excl oil and coolant)
Piston speed at 1500 rpm	7.0 m/s
Piston speed at 1800 rpm	8.4 m/s
Camshaft	High position alloy steel
Pistons	Aluminium pistons
Connection rods	I-section press forgings of alloy steel
Crankshaft	Alloy steel with hardened and polished bearing surfaces
Oil capacity	32-38 dm³
Electrical system	1-pole 24V

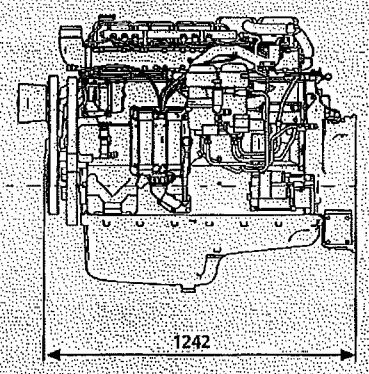

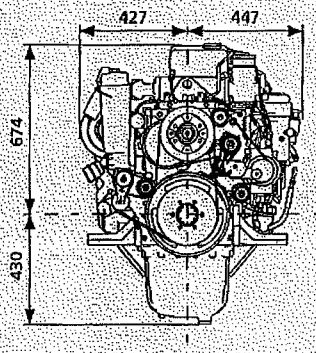

Output

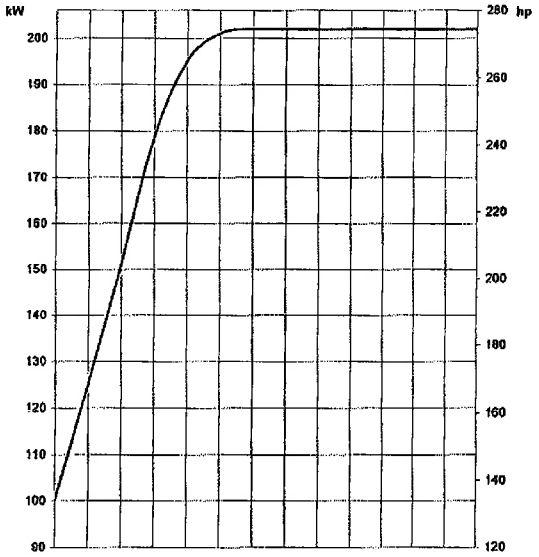

Torque

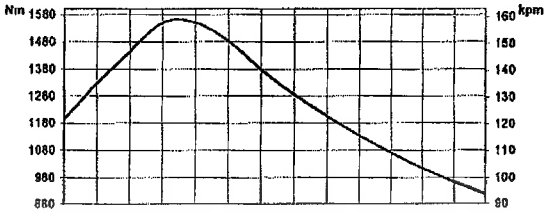

Spec fuel and reductant consumption

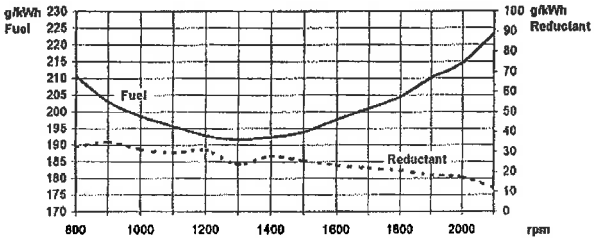

Test conditions Air temperature +25°C. Barometric pressure 100 kPa (750 mmHg). Humidity 30%. Diesel fuel acc. to ECE R 24 Annex 6. Density of fuel 0,840 kg/dm³. Viscosity of fuel 3.0 cSt at 40°C. Energy value 42700 kJ/kg. Power test code ISO 3046. Power and fuel values +/-3%.

SCANIA
Scania Engines

SE 151 87 Södertälje, Sweden
Telephone +46 8 553 810 00
Telefax +46 8 553 829 93
www.scania.com
engines@scania.com

SCR system

US Tier 4i, EU Stage IIIB

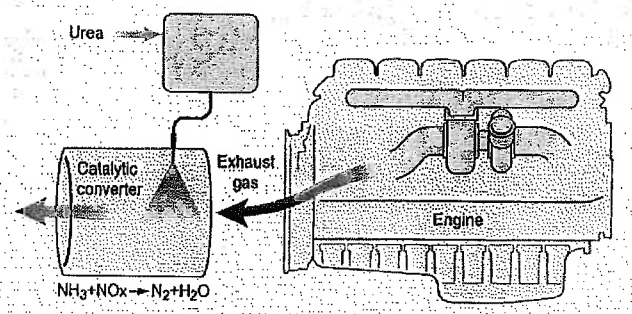

The principle for Scania SCR system

SCR (Selective Catalytic Reduction) technology is used on Scania's engines for Stage IIIB and Tier 4i to reduce the NO_x content in the exhaust gases. A chemical process is started by injecting reductant, a urea and water mixture, into the exhaust gas stream. During injection the water evaporates and the urea breaks down to form ammonia. The ammonia then reacts with the nitrogen gases in the catalytic converter and forms harmless products such as nitrogen gas and water. Through the use of SCR the exhaust gases are purged of poisonous levels of NO_x in the best possible way. Scania is making use of a system that is carefully developed and tested in our own laboratory.

The reductant tank holds 38 or 60 litres and is heated by the engine's cooling system in order to avoid freezing of the urea solution, urea freezes at -11°C. The reductant tank and a pump module are delivered as a unit which is fitted to brackets for an easy installation. The Scania system contains all mechanical and electrical parts needed except from the exhaust piping which is to be adapted according to the customers installation.

Mechanical system

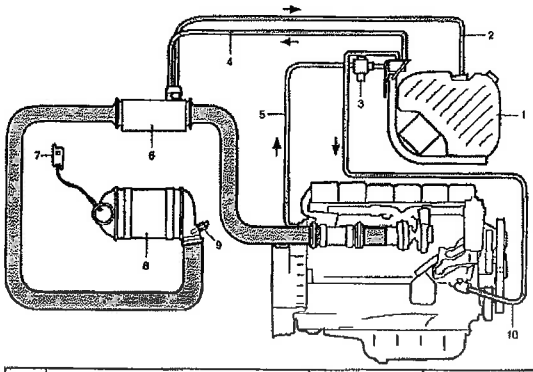

	Mechanical system	Standard	Optional
1	Reductant tank and pump module	38 l	60 l
2	Reductant fluid return line	2 m	3.5 m
3	Coolant valve	✓	–
4	Reductant pressure line	2 m	3.5 m
5	Coolant hose for tank and pump heating	–	–
6	Hydrolysis catalyst with reductant doser	✓	–
7	NO_x sensor with control unit	✓	–
8	SCR catalyst	✓	–
9	Temperature sensor	✓	–
10	Coolant hose, return from tank and pump heating	–	–

Electric system

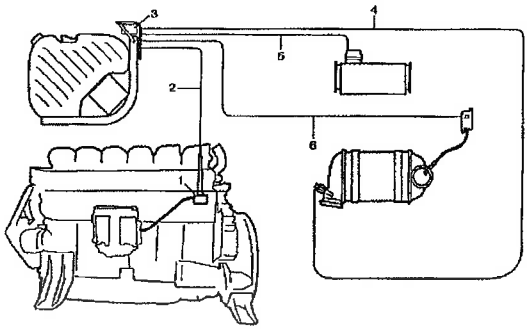

	Electric system	Standard	Optional
1	Customer interface, SCR system	✓	–
2	Pipe network between engine and SCR control unit	3 m	6 m
3	Electrical interface, SCR system	✓	–
4	Temperature sensor electrical cable	3 m	6 m
5	Reductant doser electrical cable	3 m	6 m
6	NO_x sensor electrical cable	3 m	6 m

This specification may be revised without notice.

SCR system

US Tier 4i, EU Stage IIIB

Reductant tank - 38 litres
Total volume: 50 litres
Filling volume: 38 litres

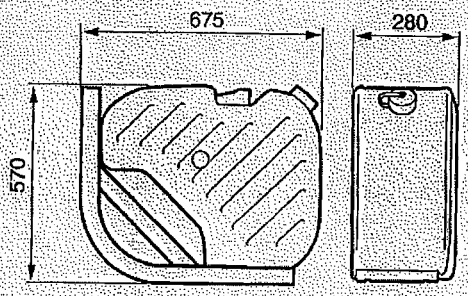

Reductant tank - 60 litres
Total volume: 70 litres
Filling volume: 60 litres

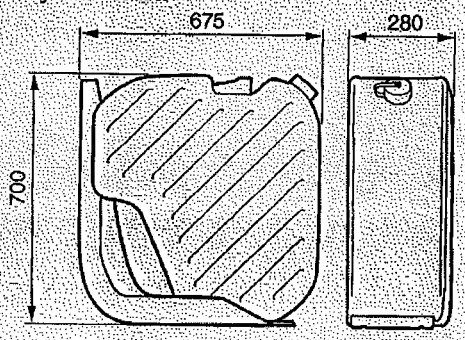

Hydrolysis catalyst with reductant doser

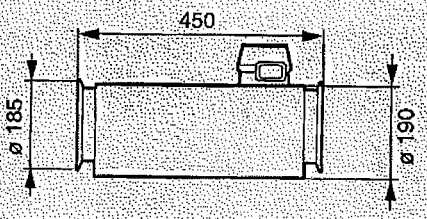

SCR catalyst

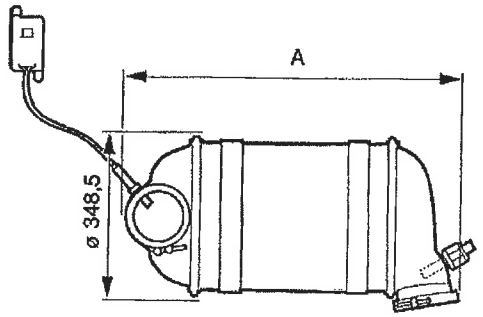

Engine	Power (kw)	Volume (litres)	Measure A (mm)
DC09	202-294	24	765
DC13	257-405	33	857
DC16	405-515	48	1060

SCR catalyst with silencer

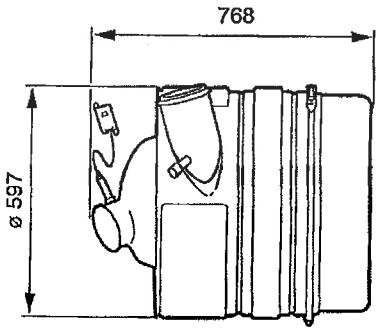

Engine	Power (kw)	Volume (litres)
DC09	202-294	33
DC13	257-405	33
DC16	Not available	

This specification may be revised without notice.

SCANIA
Scania Engines
SE 151 87 Södertälje, Sweden
Telephone +46 8 553 810 00
Telefax +46 8 553 829 93
www.scania.com
engines@scania.com