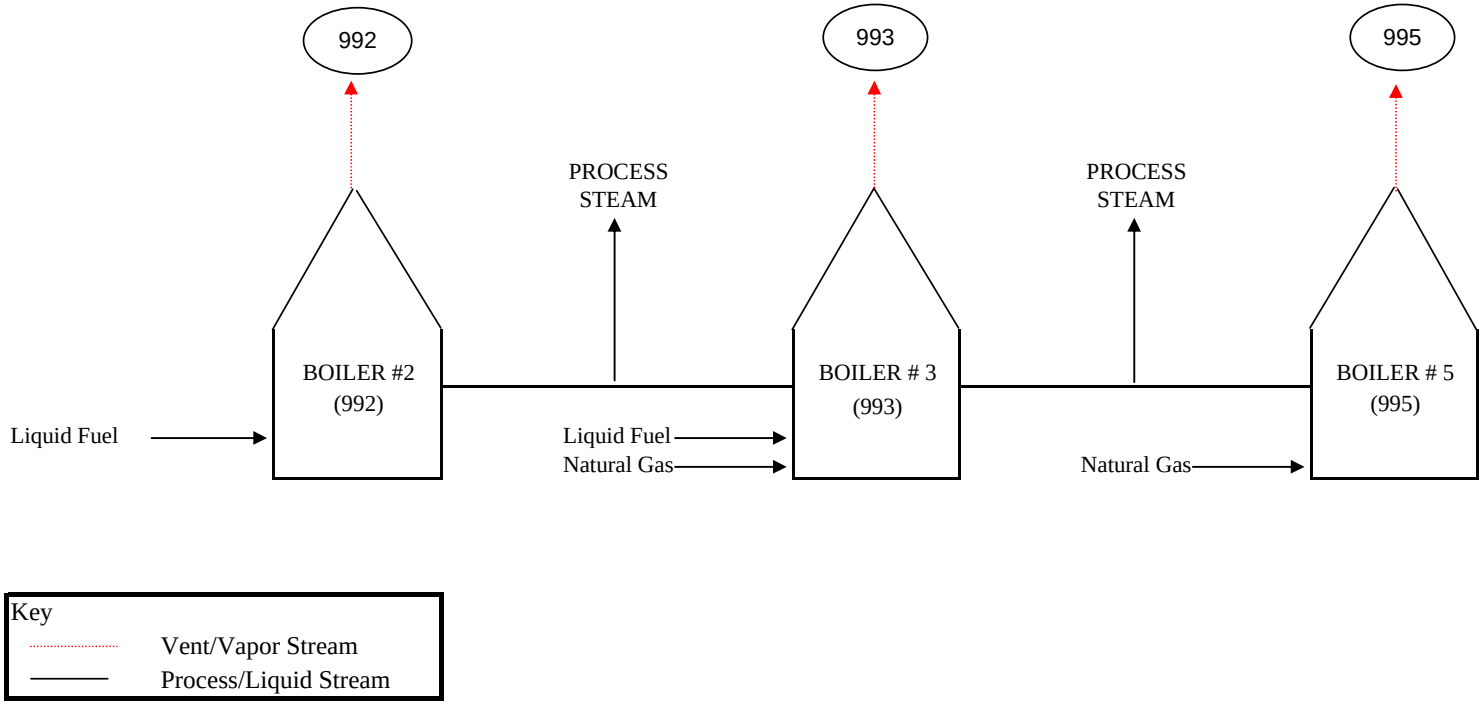

Air/Compliance Consultants, Inc.

Process Flow Diagram - Group 001; Boilers Koppers Inc., Follansbee Tar Plant, Follansbee, West Virginia	Figure 1

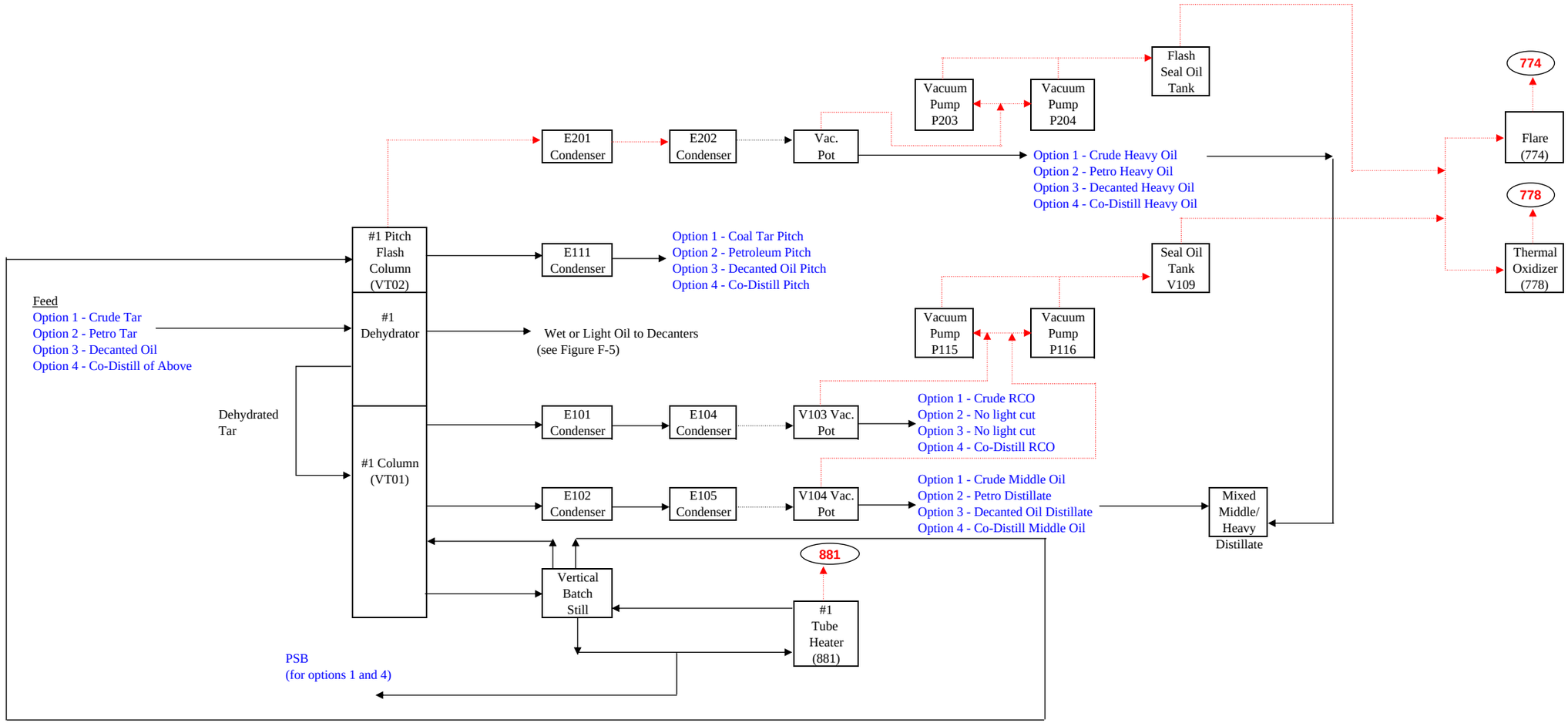

OPTION	FEED	LIGHT FRACTION	MIDDLE FRACTION	BOTTOM FRACTION (assume no pitch Flash)	BOTTOMS FRACTION TO PITCH FLASH Light Fraction	Heavy Fraction
1	Crude Tar	Crude RCO	Crude Middle Oil	Refined Tar/PSB	Crude Heavy Oil	Coal Tar Pitch
2	Petro Tar	None	Petro Distillate	None	Petro Heavy Oil	Petroleum Pitch
3	Decanted Oil	None	Decanted Distillate	None	Decanted Heavy Oil	Decanted Oil Pitch
4	Co-Distill	Co-Distill RCO	Co-Distill Distillate	Refined Tar/PSB	Co-Distill Heavy Oil	Co-Distill Pitch

Air/Compliance Consultants, Inc.

Process Flow Diagram, Group 002, Tar Refining, #1 Distillation Column
Koppers Inc., Follansbee Tar Plant, Follansbee, West Virginia

Figure 2

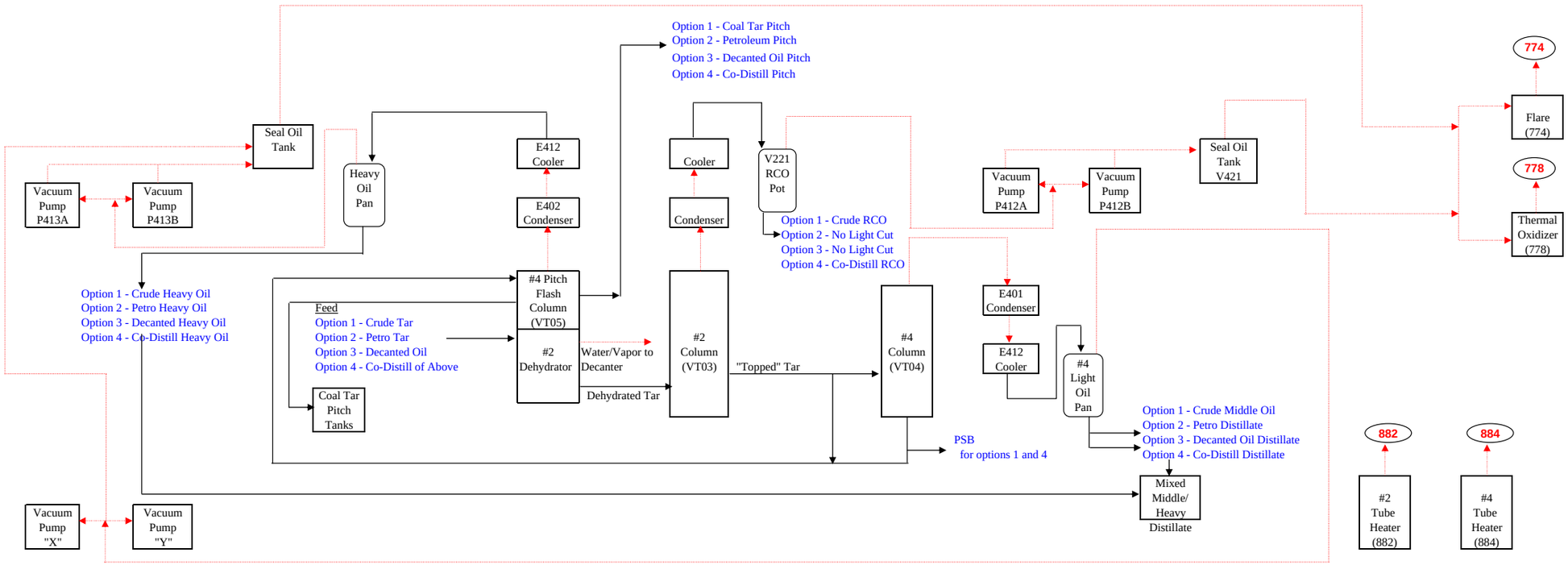

Key
Vent/Vapor Stream
Process/Liquid Stream

OPTION	FEED	LIGHT FRACTION	MIDDLE FRACTION	BOTTOM FRACTION (assume no pitch Flash)	BOTTOMS FRACTION TO PITCH FLASH Light Fraction	BOTTOMS FRACTION TO PITCH FLASH Heavy Fraction
1	Crude Tar	Crude RCO	Crude Middle Oil	Refined Tar/PSB	Crude Heavy Oil	Coal Tar Pitch
2	Petro Tar	None	Petro Distillate	None	Petro Heavy Oil	Petroleum Pitch
3	Decanted Oil	None	Decanted Oil Distillate	None	Decanted Heavy Oil	Decanted Oil Pitch
4	Co-Distill	None	Co-Distill Distillate	Refined Tar/PSB	Co-Distill Heavy Oil	Co-Distill Pitch

Air/Compliance Consultants, Inc.

Process Flow Diagram, Group 002, Tar Refining, #2/4 Distillation Columns Operating Together
Koppers Inc., Follansbee Tar Plant, Follansbee, West Virginia

Figure 3

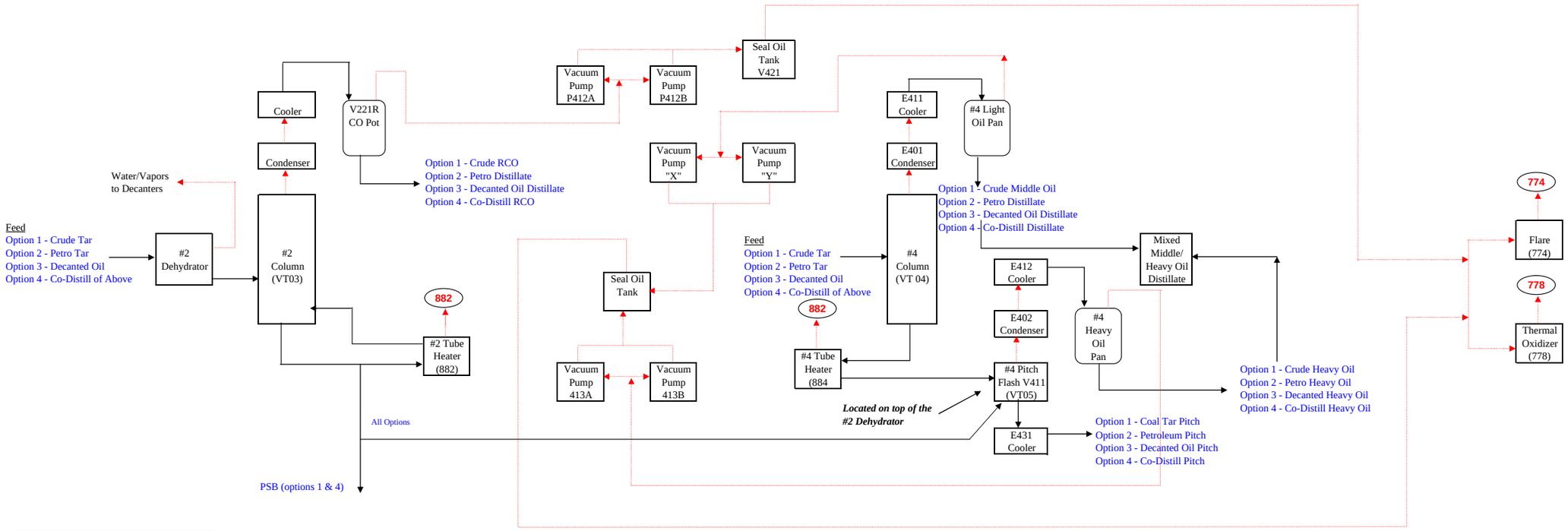

Key
Vent/Vapor Stream
Process/Liquid Stream

#2 COLUMN

OPTION	FEED	LIGHT FRACTION	MIDDLE FRACTION	BOTTOM FRACTION	OR	BOTTOMS FRACTION TO PITCH FLASH #4 Light Fraction	Heavy Fraction
1	Crude Tar	Crude RCO	None	Refined Tar/PSB		Crude Heavy Oil	Coal Tar Pitch
2	Petro Tar - None	None	Petro Distillate	NA		Petro Heavy Oil	Petro Pitch
3	Decanted Oil - None	None	Decanted Oil Distillate	NA		Decanted Heavy Oil	Decanted Oil Pitch
4	Co-Distill	Co-Distill RCO	None	Refined Tar/PSB		Co-Distill Heavy Oil	Co-Distill Pitch

#4 COLUMN

OPTION	FEED	LIGHT FRACTION	MIDDLE FRACTION	BOTTOM FRACTION	BOTTOMS FRACTION TO PITCH FLASH Light Fraction	Heavy Fraction
1	Crude Tar	Crude Distillate	None	None	Crude Heavy Oil	Coal Tar Pitch
2	Petro Tar	Petro Distillate	None	None	Petro Heavy Oil	Petroleum Pitch
3	Decanted Oil	Decanted Oil Distillate	None	None	Decanted Heavy Oil	Decanted Oil Distillate
4	Co-Distill	Co-Distill Distillate	None	None	Co-Distill Heavy Oil	Co-Distill Pitch

Air/Compliance Consultants, Inc.

Process Flow Diagram, Group 002, Tar Refining, #2/4 Distillation Columns Operating Separately
Koppers Inc., Follansbee Tar Plant, Follansbee, West Virginia

Figure 4

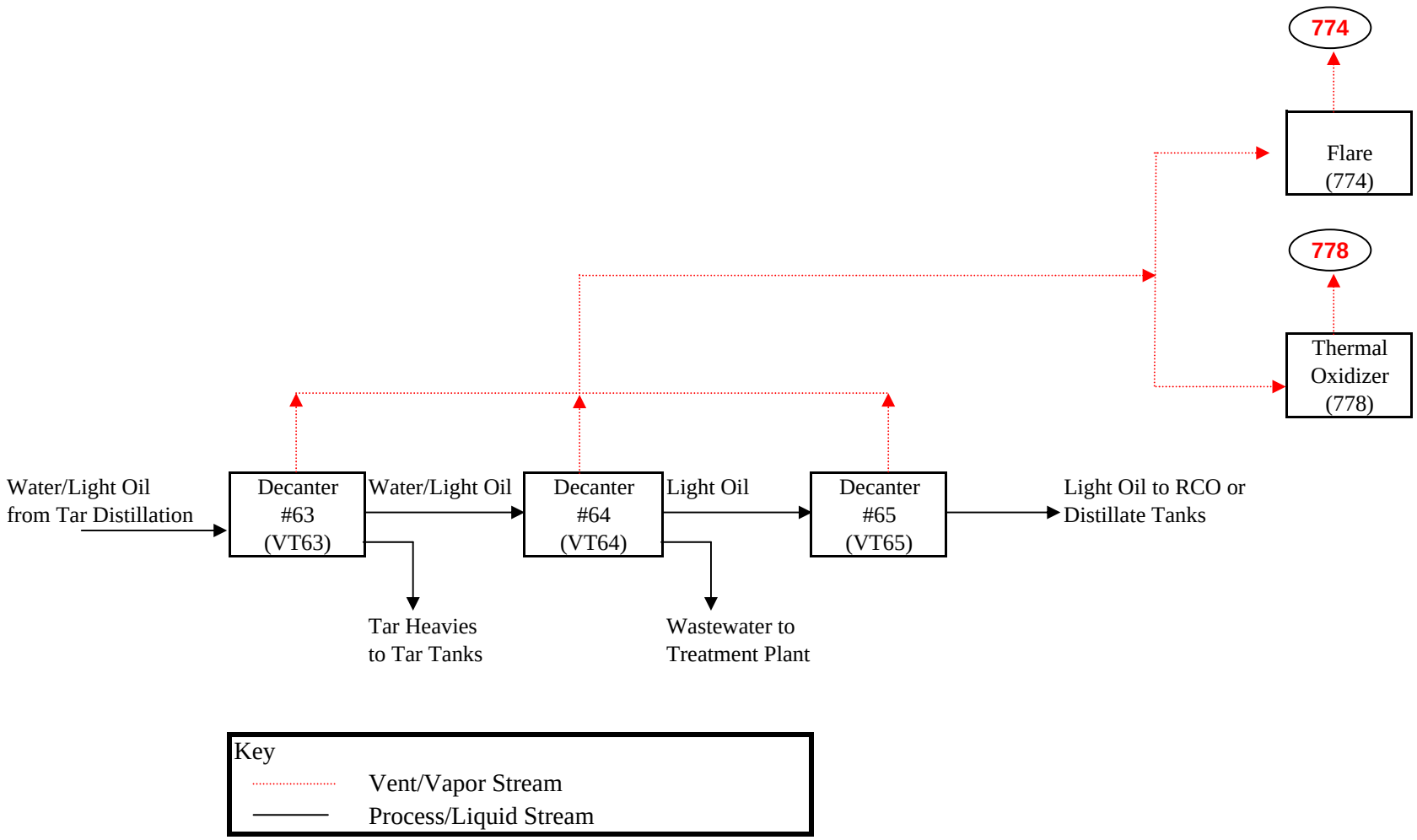

Air/Compliance Consultants, Inc.

Process Flow Diagram - Group 002: Tar Distillation, Decanters
Koppers Inc., Follansbee Tar Plant, Follansbee, West Virginia

Figure 5

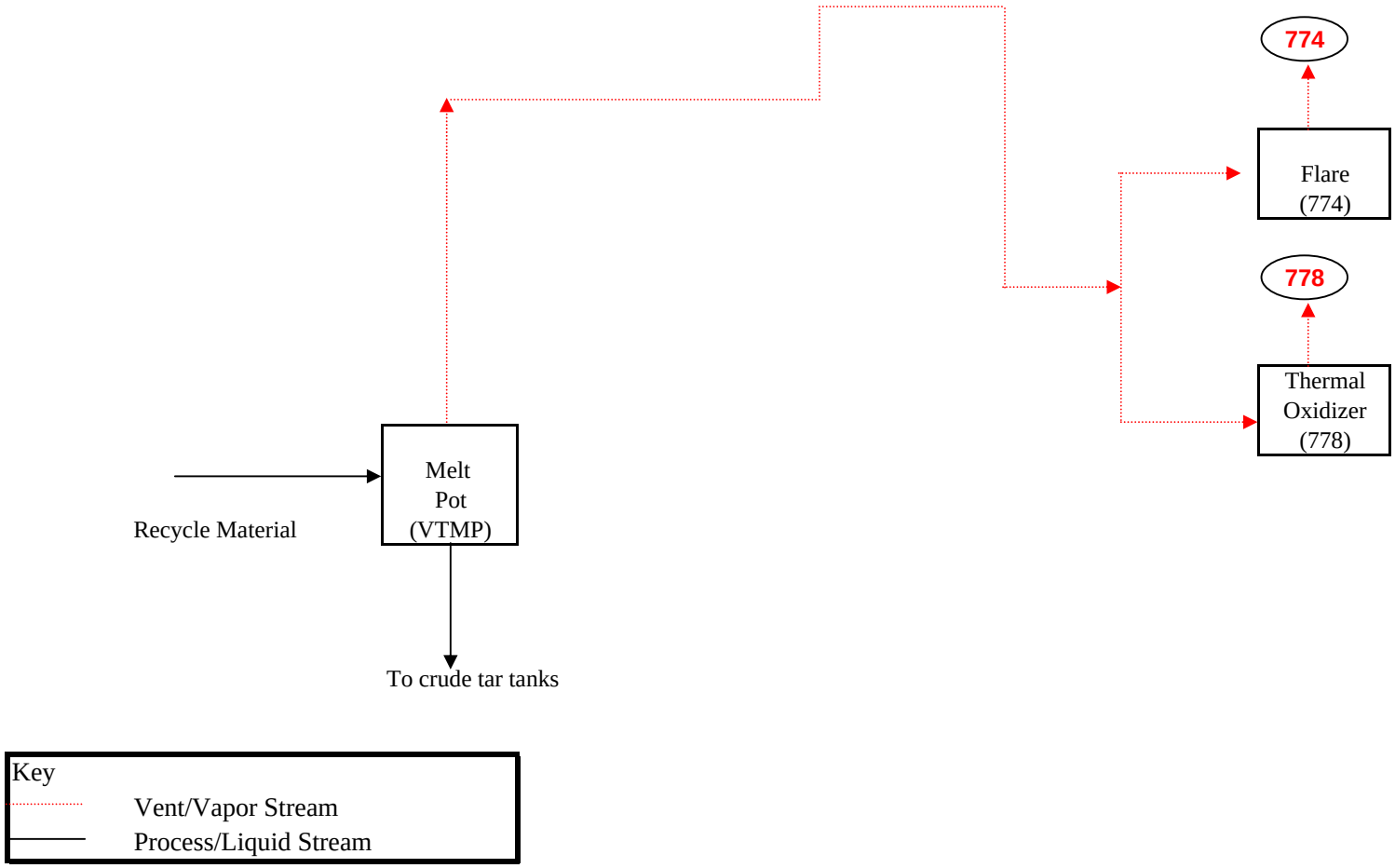

Air/Compliance Consultants, Inc.

Process Flow Diagram - Group 002: Tar Distillation, Melt Pot
Koppers Inc., Follansbee Tar Plant, Follansbee, West Virginia

Figure 6

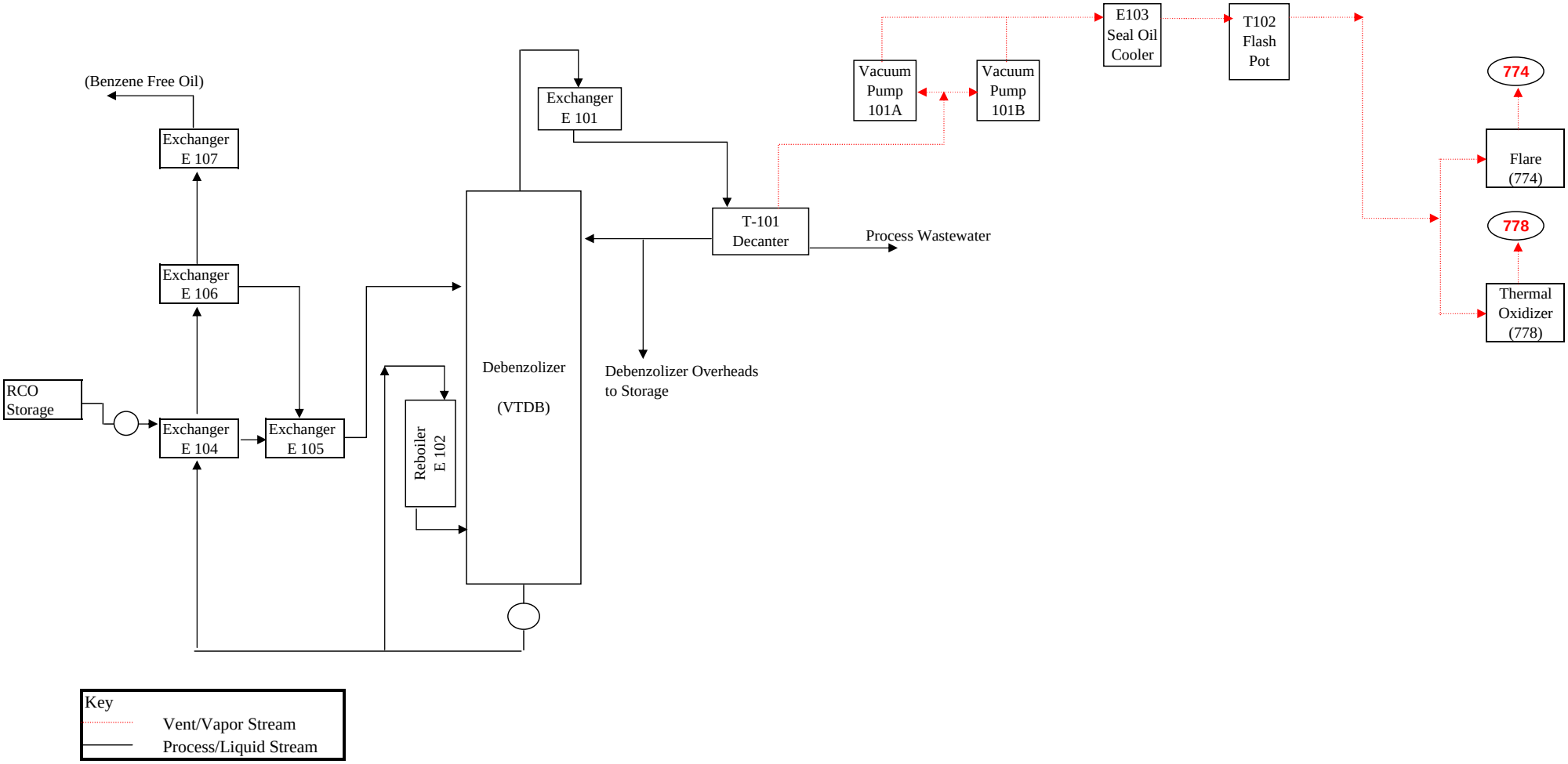

Air/Compliance Consultants, Inc.

Process Flow Diagram - Group 003, Debenzolizer Unit,
Koppers Inc., Follansbee Tar Plant, Follansbee, West Virginia

Figure 7

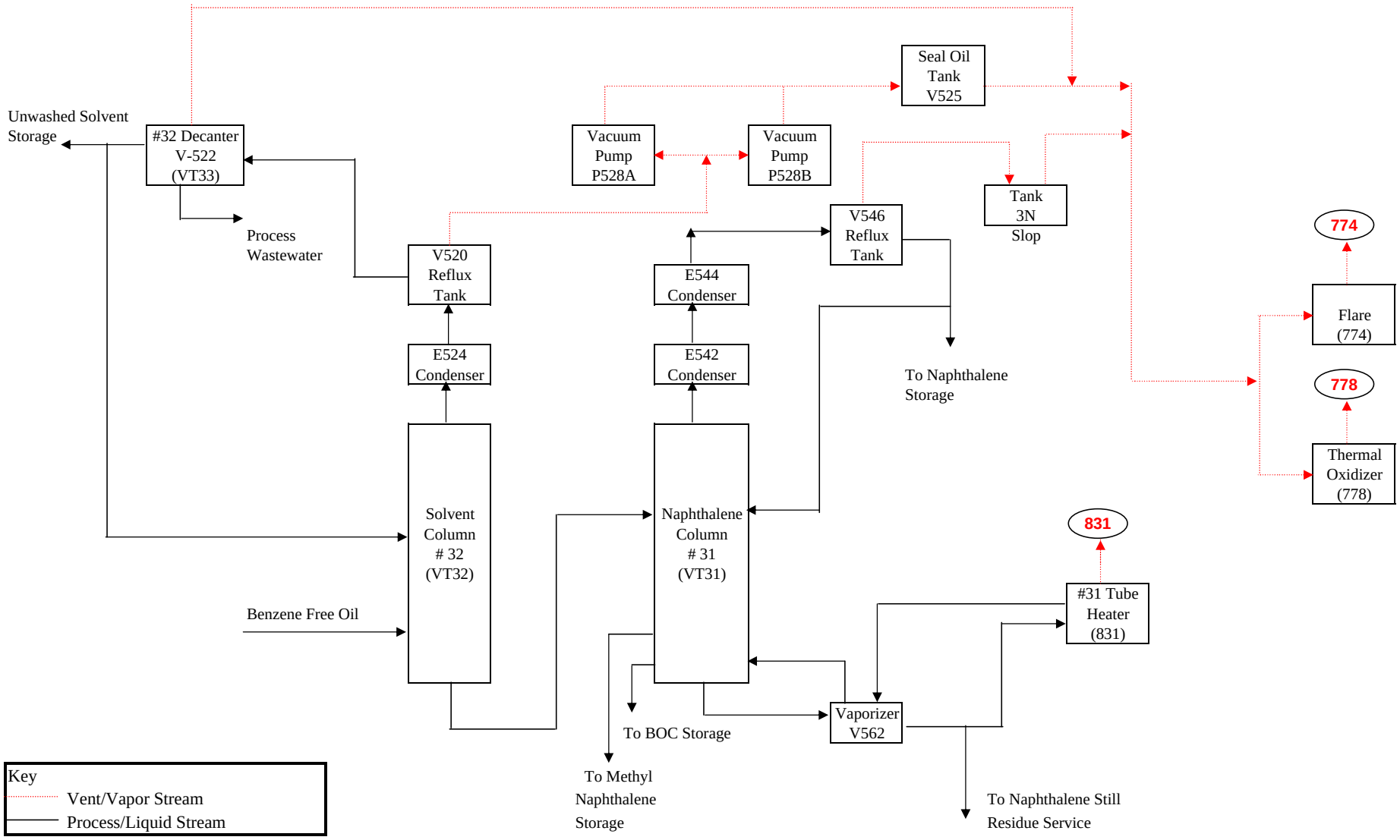

Air/Compliance Consultants, Inc.

Process Flow Diagram - Group 005: Naphthalene Distillation
Koppers Inc., Follansbee Tar Plant, Follansbee, West Virginia

Figure 8

Solvent Wash and Low Boiler Springing

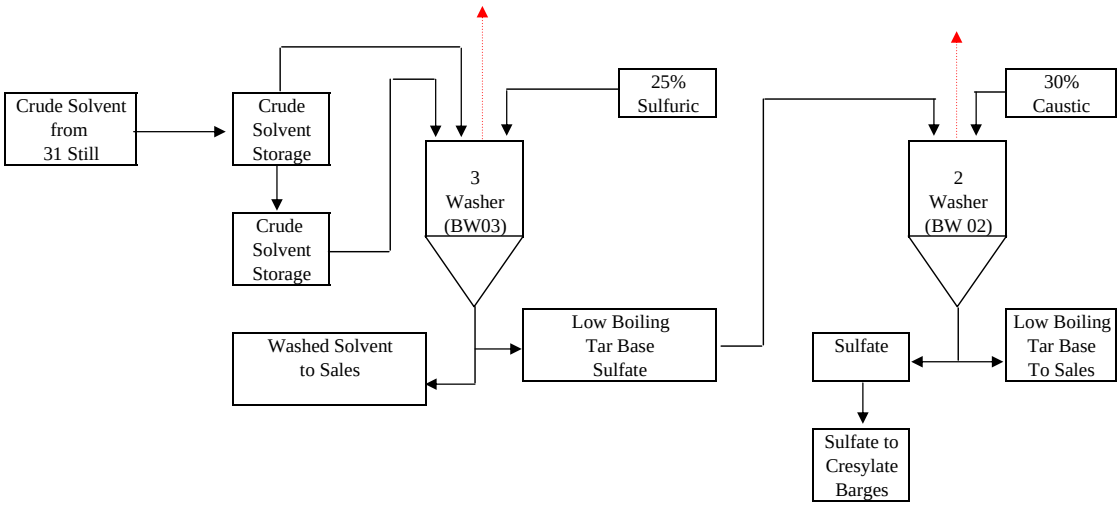

Methyl Wash and High Boiler Springing

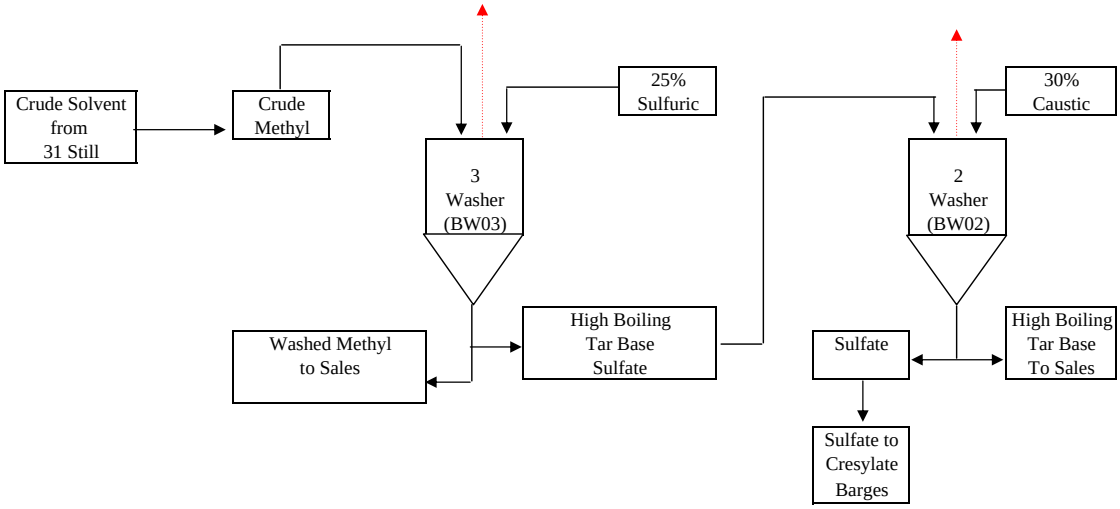

Key

Vent/Vapor Stream

Process/Liquid Stream

Air/Compliance Consultants, Inc.

Process Flow Diagram - Group 006: Base Plant,
Koppers Inc., Follansbee Tar Plant, Follansbee, West Virginia

Figure 9

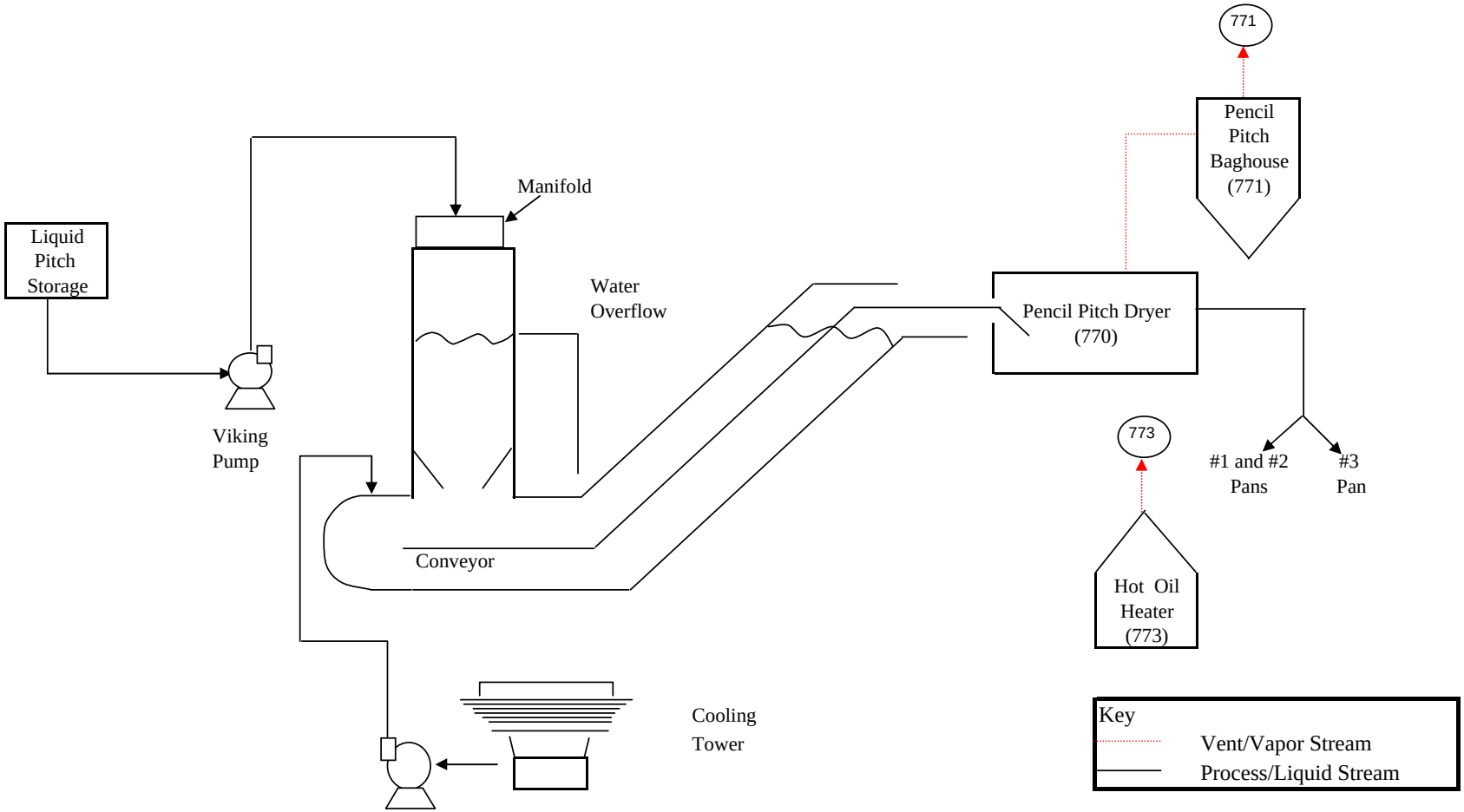

Air/Compliance Consultants, Inc.

Process Flow Diagram - Group 008: Pencil Pitch Area
Koppers Inc., Follansbee Tar Plant, Follansbee, West Virginia

Figure 10

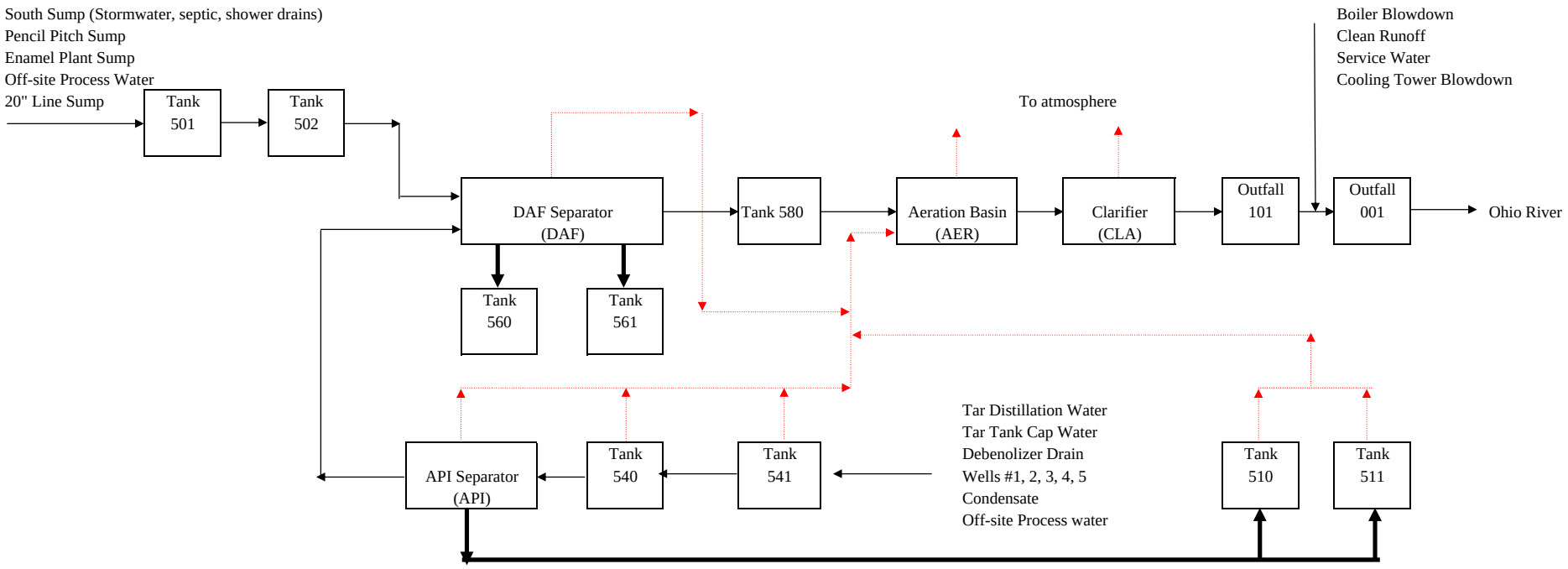

The API Separator, DAF Separator, Tank 510, Tank 511, Tank 540 and 541 are enclosed and the off-gases from those units are directed to the Aeration Basin and used as the process air.

KEY

Water
Sludge/Oil
Vent/Vapor Stream

Air/Compliance Consultants, Inc.

Process Flow Diagram - Group 00C: Wastewater Treatment Plant
Koppers Inc., Follansbee Tar Plant, Follansbee, West Virginia

Figure 11

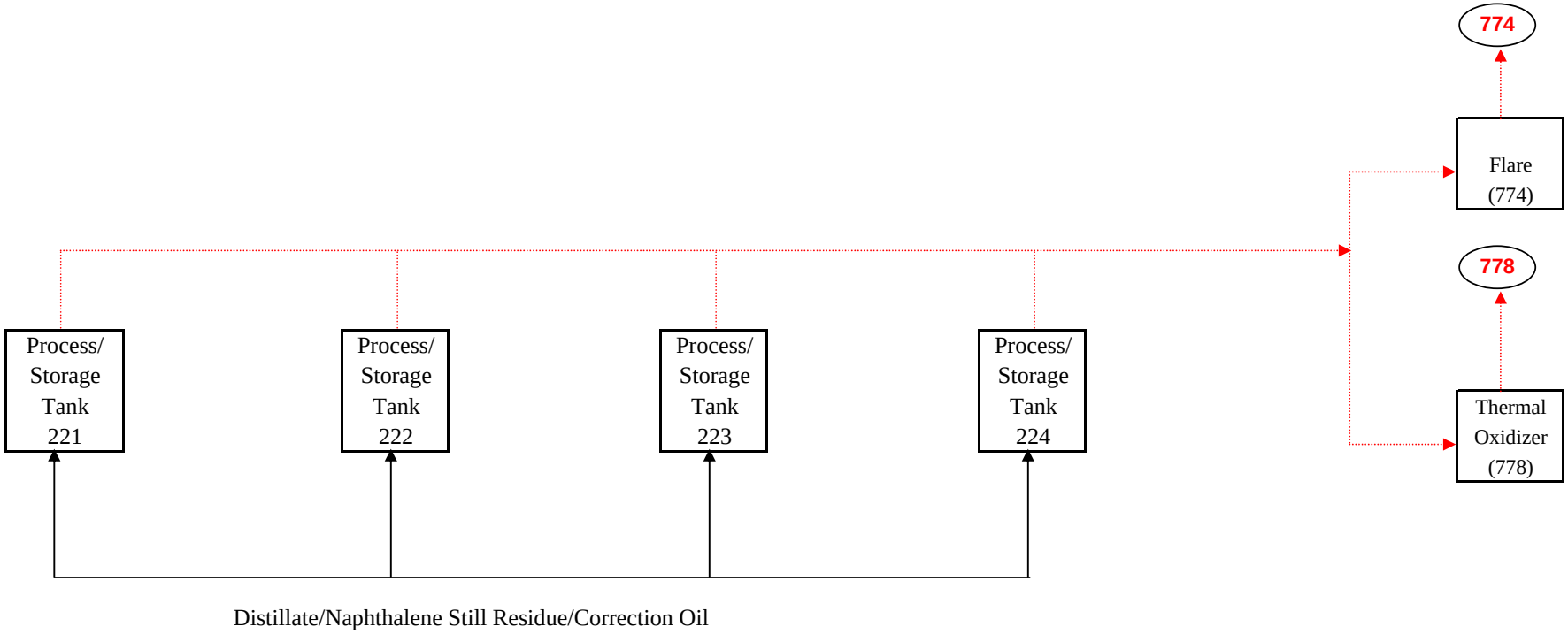

Key

Vent/Vapor Stream

Process/Liquid Stream

Air/Compliance Consultants, Inc.

Process Flow Diagram - Group 00F: Creosote Process Unit
Koppers, Inc., Follansbee Tar Plant, Follansbee, West Virginia

Figure 12

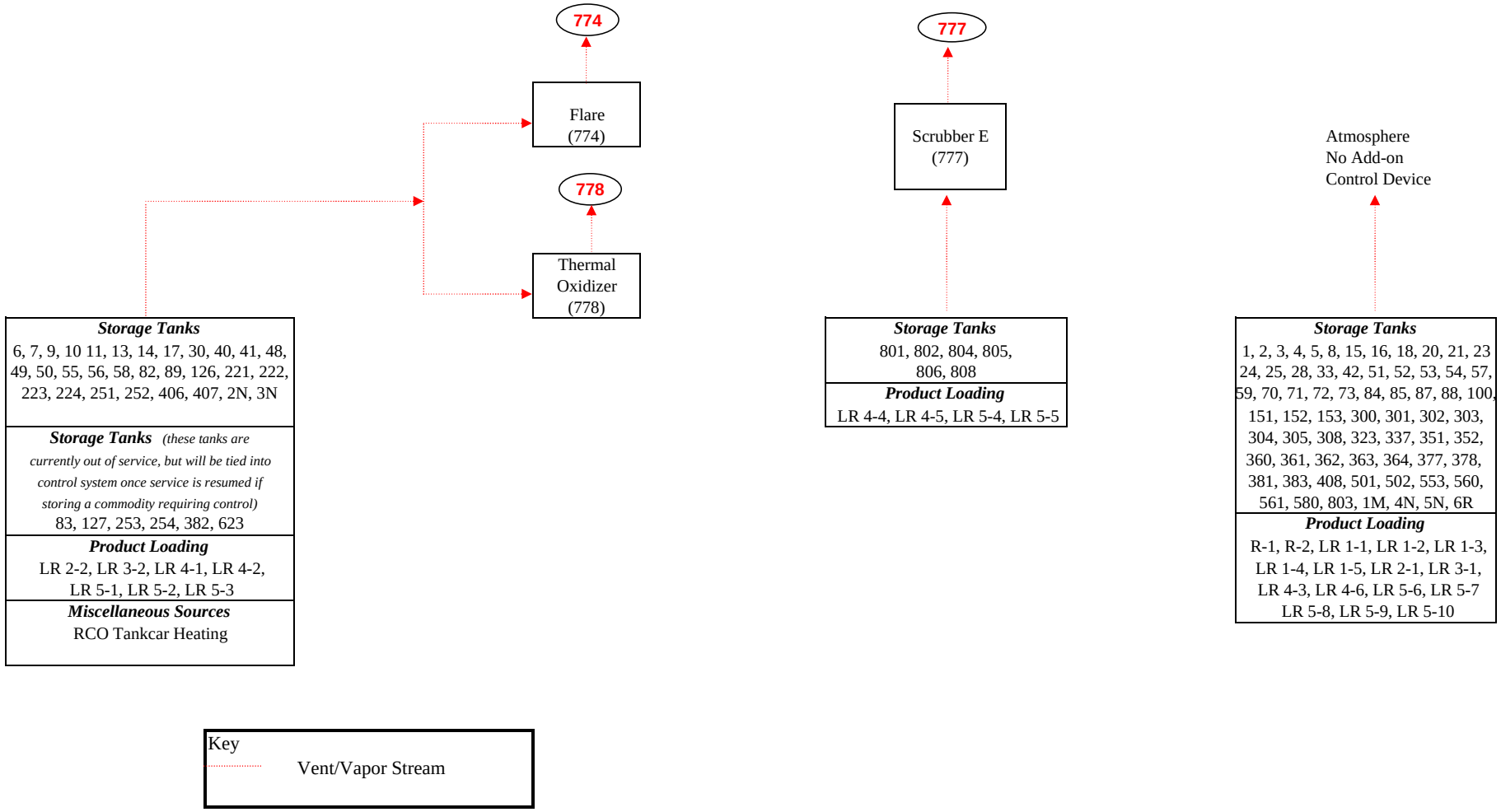

Air/Compliance Consultants, Inc.

Process Flow Diagram - Flow Diagram of Storage Tanks and Loading Racks
Koppers Inc., Follansbee Tar Plant, Follansbee, West Virginia

Figure 13

Solid Pitch Recycling

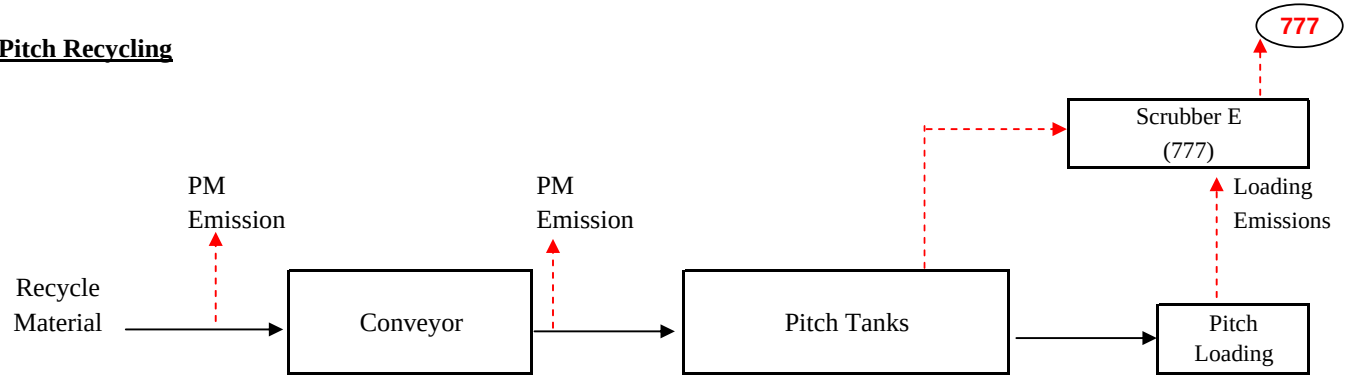

Slop Recycling

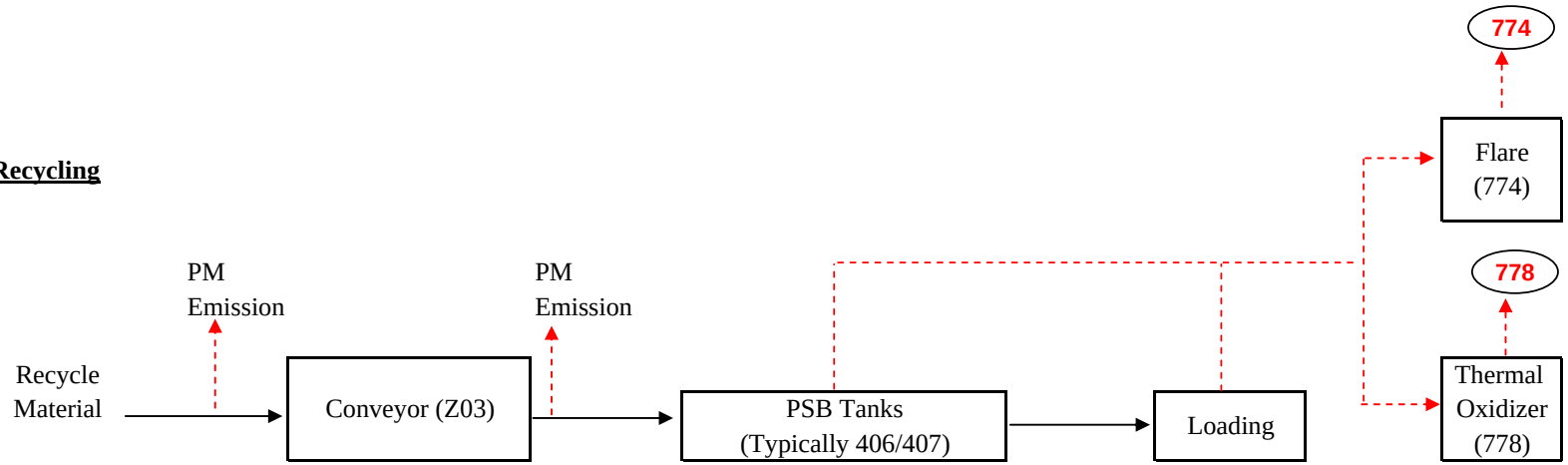

Key

Vent/Vapor Stream

Process/Liquid Stream

Air/Compliance Consultants, Inc.

Process Flow Diagram - Group 00G;
Slop and Pitch Conveying and Recycling Operation
Koppers, Inc., Follansbee Tar Plant, Follansbee, West Virginia

Figure 14

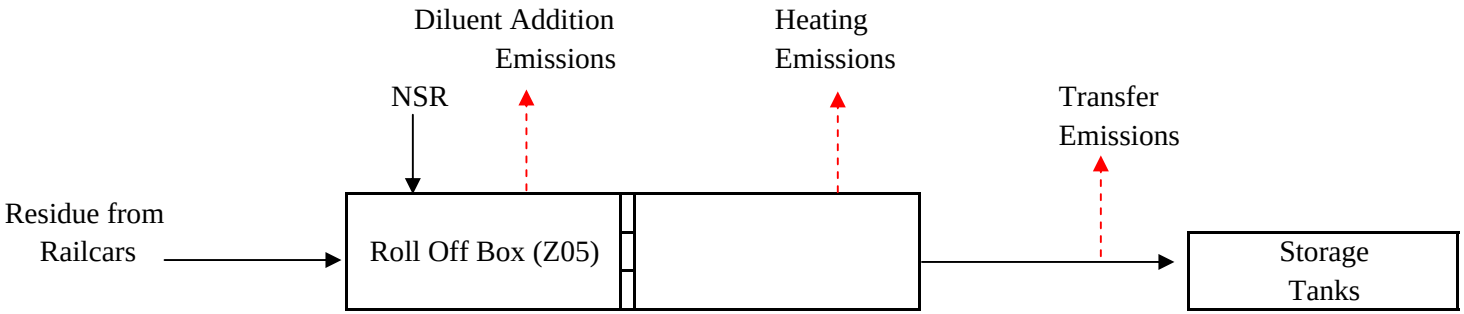

Key

Vent/Vapor Stream

Process/Liquid Stream

Air/Compliance Consultants, Inc.

Process Flow Diagram - Group 00H; Rail Car Residue Recycling Operation
Koppers, Inc., Follansbee Tar Plant, Follansbee, West Virginia

Figure 15