Williams Ohio Valley Midstream LLC
100 Teletech Drive, Suite 2
Moundsville, WV 26041
(304) 843-3100
(304) 843-3131 fax

April 24, 2015
(Via Federal Express)

William F. Durham
Director - Division of Air Quality
West Virginia Department of Environmental Protection
601 57th Street SE
Charleston, WV 25304-2345

Subject: **Application for Title V Operating Permit (45CSR30)**
Williams Ohio Valley Midstream LLC - OAK GROVE GAS PLANT
Marshall County, West Virginia

Dear Mr. Durham,

Williams Ohio Valley Midstream LLC (OVM) is submitting this Application for Title V Operating Permit (45CSR30) in accordance with the West Virginia Air Control Act and Title 45 Series 30 (45CSR30) for the Oak Grove Gas Plant in Marshall County.

The OVM Oak Grove Gas Plant is currently operating under West Virginia Department of Environmental Protection (WVDEP) Regulation 13, Permit No. R13-3070, issued July 12, 2013.

A 45CSR13 permit application was submitted to the WVDEP in January 2015 to make several corrections to facility equipment, including increasing pollutant emission rates to levels above the Title V major source thresholds, as summarized on the following page.

As the facility has had the potential to emit regulated air pollutants in amounts greater than the major source thresholds since initial startup, the Title V (45CSR30) application is due within twelve (12) months after the date of the commencement of the operation of activities authorized by Permit R13-3070; i.e., no later than May 29, 2015.

If you have any questions concerning this submittal or need additional information, please contact Bill Thompson at (304) 843-3103 or Bill.Thompson@Williams.com.

Sincerely,

Danell Zawaski (WT)

R. Danell Zawaski, P.E.
Environmental Specialist

Enclosures:
- Title V Permit Application – Checklist
- Title V Permit Application – General Forms
- Attachment A thru H
- Supplement 01 thru 06

Williams Ohio Valley Midstream LLC

OAK GROVE GAS PLANT

Application for 45CSR30 Title V Operating Permit

EMISSIONS SUMMARY

Facility-Wide Emissions Summary [Tons per Year]

Bold/Shaded Cells indicates the PTE > Title V Major Source Thresholds

Criteria Pollutants	Potential Emissions (Including Fugitives)	
	R13-3070	R13-3070A (Pending)
Nitrogen Oxides (NOX)	41.64	**121.26**
Carbon Monoxide (CO)	73.59	**192.66**
Volatile Organic Compounds (VOC)	71.04	**112.44**
Sulfur Dioxide (SO2)	1.45	0.76
Particulate Matter (PM10/2.5)	5.58	10.68
Hazardous Air Pollutants	**Potential Emissions (Including Fugitives)**	
	R13-3070	**R13-3070A (Pending)**
Benzene	2.09	1.86
Ethylbenzene	2.70	2.04
Formaldehyde (HCHO)	0.10	0.12
n-Hexane	4.89	3.70
Toluene	2.58	1.96
2,2,4-Trimethylpentane (TMP)	2.77	2.10
Xylenes	2.70	2.05
Other HAP (Acrolein, MeOH, etc.)	0.01	0.01
Total HAP	15.65	13.83
Other Regulated Pollutants (Other than Criteria and HAP)	**Potential Emissions (Including Fugitives)**	
	R13-3070	**R13-3070A (Pending)**
Carbon Dioxide (CO_2)	86,119	218,331
Methane (CH_4)	148	416
Nitrous Oxide (N_2O)	27	69
CO_2 equivalent (CO_2e)	97,873	**249,163**

The increases in VOC is largely due to the proposed increase in Slop Oil/Condensate thru-put (TK-01 (10E) thru TK-04 (13E) and TL-1 (14E)), and due to a significant increase in waste gas volume sent to the Process Flare (FL-1 (8E).

The increases in NOx, CO, and CO2e emissions result primarily from a significant increase in waste gas volume burned in the Process Flare (FL-1 (8E)) and to a lesser extent from proposed increases in fuel combustion in Heaters (H-01 (1E) thru H-07 (7E)).

TITLE V PERMIT APPLICATION CHECKLIST
FOR ADMINISTRATIVE COMPLETENESS

A complete application is demonstrated when all of the information required below is properly prepared, completed and attached. The items listed below are required information which must be submitted with a Title V permit application. Any submittal will be considered incomplete if the required information is not included.*

☒	Two signed copies of the application (at least one must contain the original "*Certification*" page signed and dated in blue ink) **(GENERAL FORMS SECTION 6)**
☒	Correct number of copies of the application on separate CDs or diskettes, (i.e. at least one disc per copy) **(TWO CD-ROMs, EACH WITH ONE COPY OF PERMIT APPLICATION)**
☒	*Table of Contents (needs to be included but not for administrative completeness)
☒	Facility information **(GENERAL FORMS SECTION 1)**
☒	Description of process and products, including NAICS and SIC codes, and including alternative operating scenarios **(GENERAL FORMS SECTION 1 AND SUPPLEMENT 01)**
☒	ATTACHMENT A - Area map showing plant location **(ATTACHMENT A)**
☒	ATTACHMENT B - Plot plan showing buildings and process areas **(ATTACHMENT B)**
☒	ATTACHMENT C - Process flow diagram(s), showing all emission units, control equipment, emission points, and their relationships **(ATTACHMENT C)**
☒	Identification of all applicable requirements with a description of the compliance status, the methods used for demonstrating compliance **(GENERAL FORMS SECTION 2, ATTACHMENT E, AND SUPPLEMENT 02)**, and a Schedule of Compliance Form **(ATTACHMENT F-NOT APPLICABLE)** for all requirements for which the source is not in compliance
☒	Listing of all active permits and consent orders (if applicable) **(GENERAL FORMS SECTION 2)**
☒	Facility-wide emissions summary **(GENERAL FORMS SECTION 3 AND SUPPLEMENT 03)**
☒	Identification of Insignificant Activities **(GENERAL FORMS SECTION 4 AND SUPPLEMENT 04)**
☒	ATTACHMENT D - Title V Equipment Table **(ATTACHMENT D)** completed for all emission units at the facility except those designated as insignificant activities **(GENERAL FORMS SECTION 4 AND SUPPLEMENT 04)**
☒	ATTACHMENT E - Emission Unit Form **(ATTACHMENT E)** completed for each emission unit listed in the Title V Equipment Table **(ATTACHMENT D)**
☒	ATTACHMENT F - Schedule of Compliance Form **(ATTACHMENT F)** for all requirements for which each emission unit is not in compliance
☒	ATTACHMENT G - Air Pollution Control Device Form **(ATTACHMENT G)** completed for each control device listed in the Title V Equipment Table **(ATTACHMENT D)**
☐	ATTACHMENT H - Compliance Assurance Monitoring (CAM) Form **(ATTACHMENT H-NOT APPLICABLE)** completed for each control device for which the "Is the device subject to CAM?" question is answered "Yes" on the Air Pollution Control Device Form **(ATTACHMENT G)**
☒	General Application Forms signed by a Responsible Official **(GENERAL FORMS SECTION 6)**
☐	Confidential Information submitted in accordance with 45CSR31 **(GENERAL FORMS SECTION 1-NOT APPLICABLE)**

APPLICATION FOR
45CSR30 TITLE V OPERATING PERMIT

For the:

Williams Ohio Valley Midstream LLC

OAK GROVE GAS PLANT

Marshall County, West Virginia

Submitted to:

WEST VIRGINIA
DIVISION OF AIR QUALITY
DEPARTMENT OF ENVIRONMENTAL PROTECTION

Submitted by:

Williams Ohio Valley Midstream LLC
100 Teletech Drive, Suite 2
Moundsville, WV 26041

Prepared by:

EcoLogic Environmental Consultants, LLC
864 Windsor Court
Santa Barbara, CA 93111

April 2015

APPLICATION FOR
45CSR30 TITLE V OPERATING PERMIT

Williams Ohio Valley Midstream LLC (OVM)
OAK GROVE GAS PROCESSING PLANT (GP)
Marshall County, West Virginia

TABLE OF CONTENTS

COVER LETTER

TITLE V OPERATING PERMIT APPLICATION – CHECKLIST

TITLE PAGE / TABLE OF CONTENTS

TITLE V OPERATING PERMIT APPLICATION

- SECTION 1: General Information
- SECTION 2: Applicable Requirements
- SECTION 3: Facility-Wide Emissions
- SECTION 4: Insignificant Activities
- SECTION 5: Emission Units, Control Devices, and Emission Points
- SECTION 6: Certification of Information

ATTACHMENTS TO THE APPLICATION

- ATTACHMENT A: Area (Topo) Map
- ATTACHMENT B: Plot Plan(s)
- ATTACHMENT C: Process Flow Diagram(s) (PFD)
- ATTACHMENT D: Title V Equipment Table
- ATTACHMENT E: Emission Unit Form(s)
- ATTACHMENT F: Schedule of Compliance Form(s)
- ATTACHMENT G: Air Pollution Control Device Form(s)
- ATTACHMENT H: Compliance Assurance Monitoring (CAM) Form(s) (Not Applicable)

SUPPLEMENTS TO THE APPLICATION

- SUPPLEMENT 01: Process Description
- SUPPLEMENT 02: Regulatory Discussion
- SUPPLEMENT 03: Emission Calculations
- SUPPLEMENT 04: Insignificant Activities – Misc. Storage Tanks
- SUPPLEMENT 05: Gas Analysis
- SUPPLEMENT 06: Vendor Data

TITLE V OPERATING PERMIT (45CSR30) APPLICATION
GENERAL FORMS

- Section 1: General Information
- Section 2: Applicable Requirements
- Section 3: Facility-Wide Emissions
- Section 4: Insignificant Activities
- Section 5: Emission Units, Control Devices, and Emission Points
- Section 6: Certification of Information

WEST VIRGINIA DEPARTMENT OF ENVIRONMENTAL PROTECTION
DIVISION OF AIR QUALITY

601 57th Street SE
Charleston, WV 25304
Phone: (304) 926-0475
www.dep.wv.gov/daq

INITIAL/RENEWAL TITLE V PERMIT APPLICATION - GENERAL FORMS

Section 1: General Information

1. Name of Applicant (As registered with the WV Secretary of State's Office):

Williams Ohio Valley Midstream LLC

2. Facility Name or Location:

Oak Grove Gas Plant (OGGP)

3. DAQ Plant ID No.:

0 5 1 - 0 0 1 5 7

4. Federal Employer ID No. (FEIN):

2 7 - 0 8 5 6 7 0 7

5. Permit Application Type:

- ☑ Initial Permit
- ☐ Permit Renewal
- ☐ Update to Initial/Renewal Permit Application

When did operations commence? May 29, 2014

What is the expiration date of the existing permit? na

6. Type of Business Entity:

☐ Corporation ☐ Government Agency ☑ LLC
☐ Partnership ☐ Limited Partnership

7. Is the Applicant the:

☐ Owner ☐ Operator ☑ Both

If the Applicant is not both the owner and operator, please provide the name and address of the other party.

na

8. Number of On-site Employees:

~36

9. Governmental Code:

- ☑ Privately owned and operated; 0
- ☐ Federally owned and operated; 1
- ☐ State government owned and operated; 2
- ☐ County government owned and operated; 3
- ☐ Municipality government owned and operated; 4
- ☐ District government owned and operated; 5

10. Business Confidentiality Claims

Does this application include confidential information (per 45CSR31)? ☐ Yes ☑ No

If yes, identify each segment of information on each page that is submitted as confidential, and provide justification for each segment claimed confidential, including the criteria under 45CSR§31-4.1, and in accordance with the DAQ's "*PRECAUTIONARY NOTICE-CLAIMS OF CONFIDENTIALITY*" guidance.

11. Mailing Address		
Street or P.O. Box: Williams Ohio Valley Midstream LLC 100 Teletech Drive, Suite 2		
City: Moundsville	**State:** WV	**Zip:** 26041
Telephone Number: (304) 843-3100	**Fax Number:** (304) 843-3131	

12. Facility Location		
Street: 5258 Fork Ridge Rd ~3.7 Miles SE of Moundsville	**City:** Moundsville	**County:** Marshall
UTM Easting: 526.01 km	**UTM Northing:** 4,414.01 km	**Zone:** ☑ 17 ☐ 18
Directions: From Lafayette Ave in Moundsville: a. Head East onto 12th St ~1.1 Miles; b. Continue onto Fork Ridge Rd ~5.4 Miles; c. Entrance to the Site is on the Left.		
Portable Source?	☐ Yes ☑ No	
Is facility located w/in a nonattainment area?	☑ Yes ☐ No	**If yes, for what air pollutants?** Sulfur Dioxide (SO2)
Is facility located w/n 50 miles of another state?	☑ Yes ☐ No	**If yes, name the affected state(s).** Ohio and Pennsylvania
Is facility located w/in 100 km of a Class I Area[1]? **If no, do emissions impact a Class I Area[1]?**	☐ Yes ☑ No ☐ Yes ☑ No	**If yes, name the area(s).** na

[1] *Class I areas include Dolly Sods and Otter Creek Wilderness Areas in West Virginia, and Shenandoah National Park James River Face Wilderness Area in Virginia.*

Continued…

13. Contact Information		
Responsible Official: Don Wicburg		**Title:** Vice President and General Manager
Street or P.O. Box: Williams Ohio Valley Midstream LLC 100 Teletech Drive, Suite 2		
City: Moundsville	**State:** WV	**Zip:** 26041
Telephone Number: (304) 843-3158	**Fax Number:** (304) 843-3131	
E-mail address: Don.Wicburg@Williams.Com		
Environmental Contact: Bill Thompson		**Title:** Environmental Specialist
Street or P.O. Box: Williams Ohio Valley Midstream LLC 100 Teletech Drive, Suite 2		
City: Moundsville	**State:** WV	**Zip:** 26041
Telephone Number: (304) 843-3103	**Fax Number:** (304) 843-3131	
E-mail address: Bill Thompson@Williams.Com		
Application Preparer: Walter Konkel, III		**Title:** Principal Scientist
Company: EcoLogic Environmental Consultants, LLC		
Street or P.O. Box: 864 Windsor Court		
City: Santa Barbara	**State:** CA	**Zip:** 93111
Telephone Number: (805) 964-7597	**Fax Number:** na	
E-mail address: wkonkel@elogicllc.com		

Continued…

14. Facility Description

List all processes, products, NAICS and SIC codes for normal operation, in order of priority. Also list any process, products, NAICS and SIC codes associated with any alternative operating scenarios if different from those listed for normal operation.

Process	Products	NAICS	SIC
Natural Gas Processing	Natural Gas, Ethane, Natural Gas Liquids (NGL)	211112	1311

Provide a general description of operations.

Please reference **SUPPLEMENT 01** – Process Description

The Ohio Valley Midstream LLC Oak Grove Gas Plant (OGGP) has the capacity to process 600 MMscfd of raw natural gas through three (3) cryogenic turboexpander plants (TXP), and other equipment, to produce three (3) product streams:

1) Dry, "clean", methane gas (CH4) (aka, residue gas),
2) Dry, "clean", ethane liquid (C2H6); and
3) Dry natural gas liquids (NGL (C3+)).

Natural gas from the surrounding area wells enters the OGGP via pipeline through an inlet separator which removes any free liquids entrained in the gas. The gas is then compressed (electric driven compressors) and routed through a mole sieve to remove any remaining free liquids from the gas stream. The gas is then cooled in a cryogenic process to remove natural gas liquids (NGL-propane, butane, and heavier hydrocarbons) from the methane (aka, residue gas). The residue gas is compressed (electric driven compressors) and shipped off-site via pipeline.

The ethane is then separated from the NGL in a de-ethanizer and the NGL is shipped off-site (electric driven pumps) via pipeline. The ethane is further processed in an amine unit to remove carbon dioxide (CO2) and then shipped off-site (electric driven pumps) via pipeline.

15. Provide an **Area Map** showing plant location as **ATTACHMENT A.**

16. Provide a **Plot Plan(s)**, e.g. scaled map(s) and/or sketch(es) showing the location of the property on which the stationary source(s) is located as **ATTACHMENT B.** For instructions, refer to "Plot Plan - Guidelines."

17. Provide a detailed **Process Flow Diagram(s)** showing each process or emissions unit as **ATTACHMENT C.** Process Flow Diagrams should show all emission units, control equipment, emission points, and their relationships.

Section 2: Applicable Requirements

18. Applicable Requirements Summary	
Instructions: Mark all applicable requirements.	
☐ SIP	☐ FIP
☑ **Minor Source NSR (45CSR13)**	☐ PSD (45CSR14)
☑ **NESHAP (45CSR34) (ZZZZ)**	☐ Nonattainment NSR (45CSR19)
☑ **Section 111 NSPS (Dc, JJJJ, and OOOO)**	☐ Section 112(d) MACT Standards
☐ Section 112(g) Case-by-case MACT	☑ **112(r) RMP**
☐ Section 112(i) Early Reduction of HAP	☐ Consumer/Commercial Prod. Reqts., Sect 183(e)
☐ Section 129 Standards/Reqts.	☐ Stratospheric Ozone (Title VI)
☐ Tank vessel Reqt., Section 183(f)	☐ Emissions Cap 45CSR§30-2.6.2
☐ NAAQS, Increments or Visibility (temp. sources)	☐ 45CSR27 State Enforceable Only Rule (CPU)
☑ **45CSR4 State Enforceable Only Rule (Odors)**	☐ Acid Rain (Title IV, 45CSR33)
☐ Emissions Trading and Banking (45CSR28)	☐ Compliance Assurance Monitoring (CAM)(40CFR64)
☐ CAIR NOx Annual Trading Program (45CSR39)	☐ CAIR NOx Ozone Trading Program (45CSR40)
☐ CAIR SO2 Trading Program (45CSR41)	

Please reference **SUPPLEMENT 02** – Regulatory Discussion

19. Non Applicability Determinations

List all requirements which the source has determined not applicable and for which a permit shield is requested. The listing shall also include the rule citation and the reason why the shield applies.

Please reference **SUPPLEMENT 02** – Regulatory Discussion

NEW SOURCE PERFORMANCE STANDARDS (NSPS)

NSPS D - No boiler greater than 250 MMBtu/hr (40CFR60.40(a)(1))
NSPS Da - No boiler greater than 250 MMBtu/hr (40CFR60.40a(a)(1))
NSPS Db - No boiler greater than 100 MMBtu/hr (40CFR60.40b(a))
NSPS K - No tank greater than 40,000 gallons (40CFR 60.110(a))
NSPS Ka - No tank greater than 151.416 m3 (40,000 gal) (40CFR60.110a(a))
NSPS Kb - No tank greater than 75 m3 (19,815 gal) (40CFR60.110b(a))
NSPS GG - No stationary gas turbine (40CFR60.330(a))
NSPS KKK - Plant construction commenced after 08/23/11 (40CFR60.630(b))
NSPS LLL - No sweetening units on site (40CFR60.640(a))
NSPS IIII - No stationary compression ignition engine (§60.4200(a))
NSPS KKKK - No stationary combustion turbine (§60.4300(a))

NATIONAL EMISSION STANDARDS FOR HAZAROUS AIR POLLUTANTS (NESHAP)

NESHAP HH - Not a major source of HAP and no TEG dehydration unit (§63.760(b)(2))
NESHAP HHH - No natural gas transmission or storage prior to local distribution (§63.1270(a))
NESHAP YYYY - No stationary gas turbine (§63.6080(a))
NESHAP DDDDD - Not a major source of HAP (§63.7485(a))
NESHAP JJJJJJ - No boiler as defined (§63.11195(e))

COMPLIANCE ASSURANCE MONITORING (CAM)

CAM - This rule does not apply because there no pollutant specific emission units subject to an emissions limitation or standard that require a control device be used to achieve compliance. (§64.2a))

WEST VIRGINIA AIR QUALITY REGULATIONS

45CSR14 - Not a PSD major source or PSD major modification
45CSR19 - Not located in a non-attainment area for NOx, CO, or VOC
45CSR21 - Control of VOCs - Not located in Putnam, Kanawha, Cabell, Wayne, or Wood County
45CSR27 - Exempt because equipment is used in the production and distribution of petroleum products
45CSR28 - Voluntary Emission Trading Program - Applicant chooses not to participate
45CSR29 - Not in Putnam, Kanawha, Cabell, Wayne, or Wood County
45CSR34 - Not a major source of HAP or otherwise subject to NESHAP requirements

☑ **Permit Shield**

20. Facility-Wide Applicable Requirements

List all facility-wide applicable requirements. For each applicable requirement, include the underlying rule/regulation citation and/or construction permit with the condition number.
***(Note: Title V permit condition numbers alone are not the underlying applicable requirements)*.**

Permit R13-3070 and R13-3070A (Pending) include the following facility-wide requirements:

1.0 Emission Units
1.1 Control Devices
2.12.3.d. Emergency Notice
2.18. Startup Notification
3.1.1 Open burning [45CSR6-3.1]
3.1.2 Open burning exemptions [45CSR6-3.2]
3.1.3 Asbestos [40CFR61.145(b) and 45CSR34]
3.1.4 Odors [45CSR4-3.1]
3.1.5 Permanent shutdown [45CSR13-10.5.]
3.1.6 Standby plan [45CSR11-5.2.]
3.3.1 Stack Testing [22CSR5-4(a), 45CSR13]
3.4.1 Retention of Records
3.4.2 Odors [45CSR4]
3.5.1 Responsible Official
3.5.2 Confidential Information [45CSR31]
3.5.3 Correspondence
3.5.4 Operating Permit Program [45CSR30]
3.5.5 Emission Inventory
4.1.1 Record of Monitoring
4.1.2 Minor Source of HAP
4.1.3 Air Pollution Control Equipment [45CSR13-5]
4.1.4 Record of Malfunction of APCE

☑ **Permit Shield**

Continued…

20. Facility-Wide Applicable Requirements (Continued)

For all facility-wide applicable requirements listed above, provide monitoring/testing/recordkeeping/ reporting which shall be used to demonstrate compliance. If the method is based on a permit or rule, include the condition number and/or citation. (Note: Each requirement listed above must have an associated method of demonstrating compliance. If there is not already a required method in place, then a method must be proposed.)

Permit R13-3070 and R13-3070A (pending) include the following monitoring/testing/recordkeeping/ reporting requirements:

Section	Monitoring	Testing	Recordkeeping	Reporting	Citation
2.12.3.d.	na	na	Notification	Emergency	2.12.3.d.
2.18.	na	na	Notification	Notification	2.18.
3.1.1	na	na	na	Notification	45CSR6-3.1
3.1.2	na	na	na	Notification	45CSR6-3.2
3.1.3	na	na	Asbestos Inspection	Notification	45CSR34
3.1.4	na	na	Odor Complaints	na	45CSR4-3.1
3.1.5	na	na	na	Application	45CSR13-10.5.
3.1.6	na	na	Standby Plan	na	45CSR11-5.2.
3.3.1	na	Stack Testing	Test Results	Notice and Results	45CSR13
3.4.1	na	na	Keep for 5 Yrs	na	3.4.1
3.4.2	na	na	Odor Complaints	na	45CSR4
3.5.1	na	na	na	Certification	3.5.1
3.5.2	na	na	na	Confidentiality	45CSR31
3.5.3	na	na	na	Addresses	3.5.3
3.5.4	na	na	Receipt	Emission Statement	45CSR30
3.5.5	na	na	Emission Inventory	Emission Inventory	3.5.5
4.1.1	na	na	Analysis Results	na	4.1.1
4.1.2	na	na	Emission Inventory	na	4.1.2
4.1.3	na	na	Maintenance Log	na	45CSR13-5
4.1.4	na	na	APCE Malfunction	na	4.1.4

Are you in compliance with all facility-wide applicable requirements? ☑ Yes ☐ No

If no, complete the **Schedule of Compliance Form** as **ATTACHMENT F.** **(Not Applicable)**

Continued…

21. Active Permits/Consent Orders		
Permit or Consent Order Number	**Date of Issuance MM/DD/YYYY**	**List any Permit Determinations that Affect the Permit (if any)**
R13-3070	07/12/2013	PD14-044
R13-3070A	Pending	na

Continued…

22. Inactive Permits/Obsolete Permit Conditions

Permit or Consent Order Number	Date of Issuance MM/DD/YY	Permit Condition Number
na		

Section 3: Facility-Wide Emissions

23. Facility-Wide Emissions Summary [Tons per Year]		
Criteria Pollutants	**Potential Emissions (Including Fugitives)**	
	R13-3070	**R13-3070A (Pending)**
Carbon Monoxide (CO)	73.59	**192.66**
Nitrogen Oxides (NOX)	41.64	**121.26**
Lead (Pb)	---	---
Particulate Matter (PM2.5)[1]	5.58	10.68
Particulate Matter (PM10)[1]	5.58	10.68
Total Particulate Matter (TSP)	5.58	10.68
Sulfur Dioxide (SO2)	1.45	0.76
Volatile Organic Compounds (VOC)	71.04	**112.40**
Hazardous Air Pollutants[2]	**Potential Emissions (Including Fugitives)**	
	R13-3070	**R13-3070A (Pending)**
Benzene	2.09	1.86
Ethylbenzene	2.70	2.04
Formaldehyde (HCHO)	0.10	0.12
n-Hexane	4.89	3.70
Toluene	2.58	1.96
2,2,4-Trimethylpentane (TMP)	2.77	2.10
Xylenes	2.70	2.05
Other HAP (Acrolein, MeOH, etc.)	0.01	0.01
Total HAP	15.65	13.83
Regulated Pollutants other than Criteria and HAP	**Potential Emissions (Including Fugitives)**	
	R13-3070	**R13-3070A (Pending)**
Carbon Dioxide (CO_2)	86,119	218,331
Nitrous Oxide (N_2O)	27	69
Methane (CH_4)	148	405
CO_2 equivalent (CO_2e)	97,873	**248,905**

[1] *PM2.5 and PM10 are components of TSP.*

[2] *For HAPs that are also considered PM or VOCs, emissions should be included in both the HAPs section and the Criteria Pollutants section.*

Please reference **SUPPLEMENT 03** – Emission Calculations

Section 4: Insignificant Activities

24. Insignificant Activities (Check all that apply)		
☑	1	Air compressors and pneumatically operated equipment, including hand tools.
☑	2	Air contaminant detectors or recorders, combustion controllers or shutoffs.
☑	3	Any consumer product used in the same manner as in normal consumer use, provided the use results in a duration and frequency of exposure which are not greater than those experienced by consumer, and which may include, but not be limited to, personal use items; janitorial cleaning supplies, office supplies and supplies to maintain copying equipment.
☑	4	Bathroom/toilet vent emissions.
☑	5	Batteries and battery charging stations, except at battery manufacturing plants.
☑	6	Bench-scale laboratory equipment used for physical or chemical analysis, but not lab fume hoods or vents. Many lab fume hoods or vents might qualify for treatment as insignificant (depending on the applicable SIP) or be grouped together for purposes of description.
☐	7	Blacksmith forges.
☐	8	Boiler water treatment operations, not including cooling towers.
☑	9	Brazing, soldering or welding equipment used as an auxiliary to the principal equipment at the source.
☐	10	CO2 lasers, used only on metals and other materials which do not emit HAP in the process.
☑	11	Combustion emissions from propulsion of mobile sources, except for vessel emissions from Outer Continental Shelf sources.
☑	12	Combustion units designed and used exclusively for comfort heating that use liquid petroleum gas or natural gas as fuel.
☑	13	Comfort air conditioning or ventilation systems not used to remove air contaminants generated by or released from specific units of equipment.
☑	14	Demineralized water tanks and demineralizer vents.
☑	15	Drop hammers or hydraulic presses for forging or metalworking.
☐	16	Electric or steam-heated drying ovens and autoclaves, but not the emissions from the articles or substances being processed in the ovens or autoclaves or the boilers delivering the steam.
☐	17	Emergency (backup) electrical generators at residential locations.
☐	18	Emergency road flares.
☑	19	Emission units which do not have any applicable requirements and which emit criteria pollutants (CO, NOx, SO2, VOC and PM) into the atmosphere at a rate of less than 1 pound per hour and less than 10,000 pounds per year aggregate total for each criteria pollutant from all emission units. Please specify all emission units for which this exemption applies along with the quantity of criteria pollutants emitted on an hourly and annual basis: Please reference **SUPPLEMENT 04** - Insignificant Activiteis - Misc Storage Tanks

Continued…

24. Insignificant Activities (Check all that apply) (Continued)		
☑	20	Emission units which do not have any applicable requirements and which emit hazardous air pollutants into the atmosphere at a rate of less than 0.1 pounds per hour and less than 1,000 pounds per year aggregate total for all HAPs from all emission sources. This limitation cannot be used for any source which emits dioxin/furans nor for toxic air pollutants as per 45CSR27. Please specify all emission units for which this exemption applies along with the quantity of hazardous air pollutants emitted on an hourly and annual basis: Please reference **SUPPLEMENT 04** - Insignificant Activiteis - Misc Storage Tanks
☐	21	Environmental chambers not using hazardous air pollutant (HAP) gases.
☑	22	Equipment on the premises of industrial and manufacturing operations used solely for the purpose of preparing food for human consumption.
☐	23	Equipment used exclusively to slaughter animals, but not including other equipment at slaughterhouses, such as rendering cookers, boilers, heating plants, incinerators, and electrical power generating equipment.
☑	24	Equipment used for quality control/assurance or inspection purposes, including sampling equipment used to withdraw materials for analysis.
☑	25	Equipment used for surface coating, painting, dipping or spray operations, except those that will emit VOC or HAP.
☑	26	Fire suppression systems.
☑	27	Firefighting equipment and the equipment used to train firefighters.
☐	28	Flares used solely to indicate danger to the public.
☑	29	Fugitive emission related to movement of passenger vehicle provided the emissions are not counted for applicability purposes and any required fugitive dust control plan or its equivalent is submitted.
☑	30	Hand-held applicator equipment for hot melt adhesives with no VOC in the adhesive formulation.
☑	31	Hand-held equipment for buffing, polishing, cutting, drilling, sawing, grinding, turning or machining wood, metal or plastic.
☐	32	Humidity chambers.
☑	33	Hydraulic and hydrostatic testing equipment.
☑	34	Indoor or outdoor kerosene heaters.
☑	35	Internal combustion engines used for landscaping purposes.
☐	36	Laser trimmers using dust collection to prevent fugitive emissions.
☐	37	Laundry activities, except for dry-cleaning and steam boilers.

Continued…

24. Insignificant Activities (Check all that apply) (Continued)		
☑	38	Natural gas pressure regulator vents, excluding venting at oil and gas production facilities.
☐	39	Oxygen scavenging (de-aeration) of water.
☐	40	Ozone generators.
☑	41	Plant maintenance and upkeep activities (e.g., grounds-keeping, general repairs, cleaning, painting, welding, plumbing, re-tarring roofs, installing insulation, and paving parking lots) provided these activities are not conducted as part of a manufacturing process, are not related to the source's primary business activity, and not otherwise triggering a permit modification. (Cleaning and painting activities qualify if they are not subject to VOC or HAP control requirements. Asphalt batch plant owners/operators must still get a permit if otherwise requested.)
☑	42	Portable electrical generators that can be moved by hand from one location to another. "Moved by Hand" means that it can be moved without the assistance of any motorized or non-motorized vehicle, conveyance, or device.
☑	43	Process water filtration systems and demineralizers.
☑	44	Repair or maintenance shop activities not related to the source's primary business activity, not including emissions from surface coating or de-greasing (solvent metal cleaning) activities, and not otherwise triggering a permit modification.
☑	45	Repairs or maintenance where no structural repairs are made and where no new air pollutant emitting facilities are installed or modified.
☑	46	Routing calibration and maintenance of laboratory equipment or other analytical instruments.
☐	47	Salt baths using nonvolatile salts that do not result in emissions of any regulated air pollutants. Shock chambers.
☐	48	Shock chambers.
☐	49	Solar simulators.
☑	50	Space heaters operating by direct heat transfer.
☑	51	Steam cleaning operations.
☑	52	Steam leaks.
☐	53	Steam sterilizers.
☑	54	Steam vents and safety relief valves.
☐	55	Storage tanks, reservoirs, and pumping and handling equipment of any size containing soaps, vegetable oil, grease, animal fat, and nonvolatile aqueous salt solutions, provided appropriate lids and covers are utilized.
☑	56	Storage tanks, vessels, and containers holding or storing liquid substances that will not emit any VOC or HAP. Exemptions for storage tanks containing petroleum liquids or other volatile organic liquids should be based on size limits such as storage tank capacity and vapor pressure of liquids stored and are not appropriate for this list.
☐	57	Such other sources or activities as the Director may determine.
☑	58	Tobacco smoking rooms and areas.
☑	59	Vents from continuous emissions monitors and other analyzers.

Section 5: Emission Units, Control Devices, and Emission Points

25. Equipment Table
Fill out the **Title V Equipment Table** and provide it as **ATTACHMENT D.**
26. Emission Units
For each emission unit listed in the **Title V Equipment Table**, fill out and provide an **Emission Unit Form** as **ATTACHMENT E.**
For each emission unit not in compliance with an applicable requirement, fill out a **Schedule of Compliance Form** as **ATTACHMENT F.**
27. Control Devices
For each control device listed in the **Title V Equipment Table**, fill out and provide an **Air Pollution Control Device Form** as **ATTACHMENT G.**
For any control device that is required on an emission unit in order to meet a standard or limitation for which the potential pre-control device emissions of an applicable regulated air pollutant is greater than or equal to the Title V Major Source Threshold Level, refer to the **Compliance Assurance Monitoring (CAM) Form(s)** for CAM applicability. Fill out and provide these forms, if applicable, for each Pollutant Specific Emission Unit (PSEU) as **ATTACHMENT H. (Not Applicable)**

Section 6: Certification of Information

28. Certification of Truth, Accuracy and Completeness and Certification of Compliance

Note: This Certification must be signed by a responsible official. The ***original****, signed in* ***blue ink****, must be submitted with the application. Applications without an* ***original*** *signed certification will be considered as incomplete.*

a. Certification of Truth, Accuracy and Completeness

I certify that I am a responsible official (as defined at 45CSR§30-2.38) and am accordingly authorized to make this submission on behalf of the owners or operators of the source described in this document and its attachments. I certify under penalty of law that I have personally examined and am familiar with the statements and information submitted in this document and all its attachments. Based on my inquiry of those individuals with primary responsibility for obtaining the information, I certify that the statements and information are to the best of my knowledge and belief true, accurate, and complete. I am aware that there are significant penalties for submitting false statements and information or omitting required statements and information, including the possibility of fine and/or imprisonment.

b. Compliance Certification

Except for requirements identified in the Title V Application for which compliance is not achieved, I, the undersigned hereby certify that, based on information and belief formed after reasonable inquiry, all air contaminant sources identified in this application are in compliance with all applicable requirements.

Responsible official (type or print)	
Don Wicburg	**Title:** Vice President and General Manager

Responsible official's signature:

Signature: Don Wicburg Signature Date: 4/22/2015

(Must be signed and dated in blue ink)

Note: Please check all applicable attachments included with this permit application:	
☑	ATTACHMENT A: Area Map
☑	ATTACHMENT B: Plot Plan(s)
☑	ATTACHMENT C: Process Flow Diagram(s)
☑	ATTACHMENT D: Equipment Table
☑	ATTACHMENT E: Emission Unit Form(s)
☑	ATTACHMENT F: Schedule of Compliance Form(s)
☑	ATTACHMENT G: Air Pollution Control Device Form(s)
☐	ATTACHMENT H: Compliance Assurance Monitoring (CAM) Form(s) **(Not Applicable)**

All of the required forms and additional information can be found and downloaded from, the DEP website at www.dep.wv.gov/daq, requested by phone (304) 926-0475, and/or obtained through the mail.

ATTACHMENT A

Area (Topographic) Map

Provide an Area Map showing plant location as ATTACHMENT A.

- **Address:**
  5258 Fork Ridge Rd
  ~3.7 Miles Southeast of Moundsville
  North side of Fork Ridge Rd
  Moundsville, Marshall County, WV 26041

- **Latitude and Longitude:**
  39°52'37.0" North x -80°41'56.5" West
  (39.8769° North x -80.6990° West)

- **UTM Coordinates:**
  525.74km Easting x 4,414.314km Northing - Zone: 17S

- **Elevation:**
  ~1,200'

- **Directions:**
  From Lafayette Ave/WV-2 in Moundsville:
  a. Head east onto 12th St ~1.1 Mile;
  b. Continue onto Fork Ridge Rd ~5.4 Mile;
  c. Entrance to site is on the left.

- **USGS:**
  7.5 Minute Topographic – Moundsville WV-OH – 1997
  7.5 Minute Topographic – Glen Easton WV – 1960

Williams Ohio Valley Midstream LLC

OAK GROVE GAS PLANT

Application for 45CSR30 Title V Operating Permit

Attachment A

AREA (TOPO) MAP

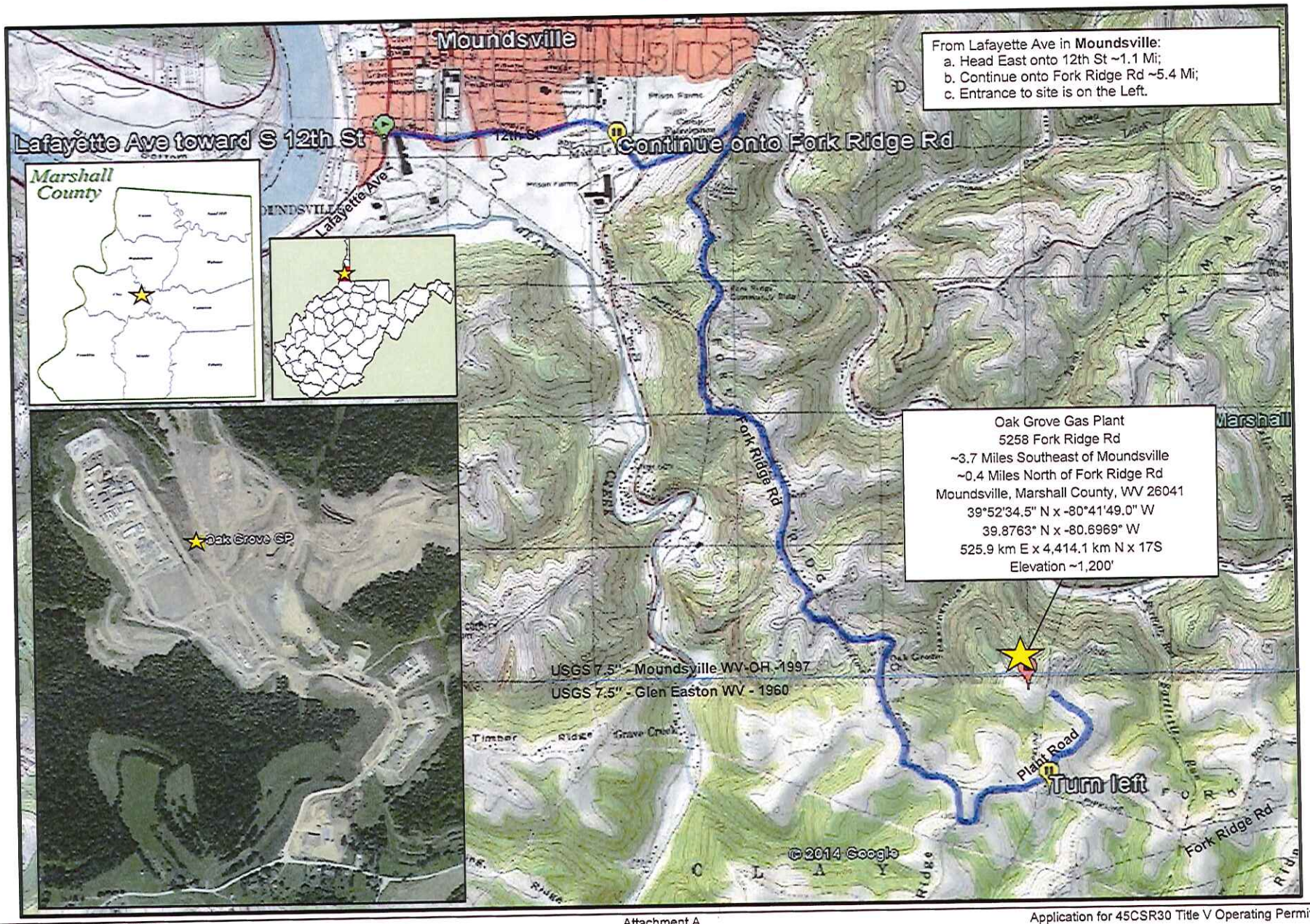

ATTACHMENT B

Plot Plan(s)

Provide a Plot Plan(s), e.g. scaled map(s) and/or sketch(es) showing the location of the property on which the stationary source(s) is located as ATTACHMENT B.

- Plot Plan – OVM Oak Grove GP
- Aerial View – OVM Oak Grove GP

Plot Plan

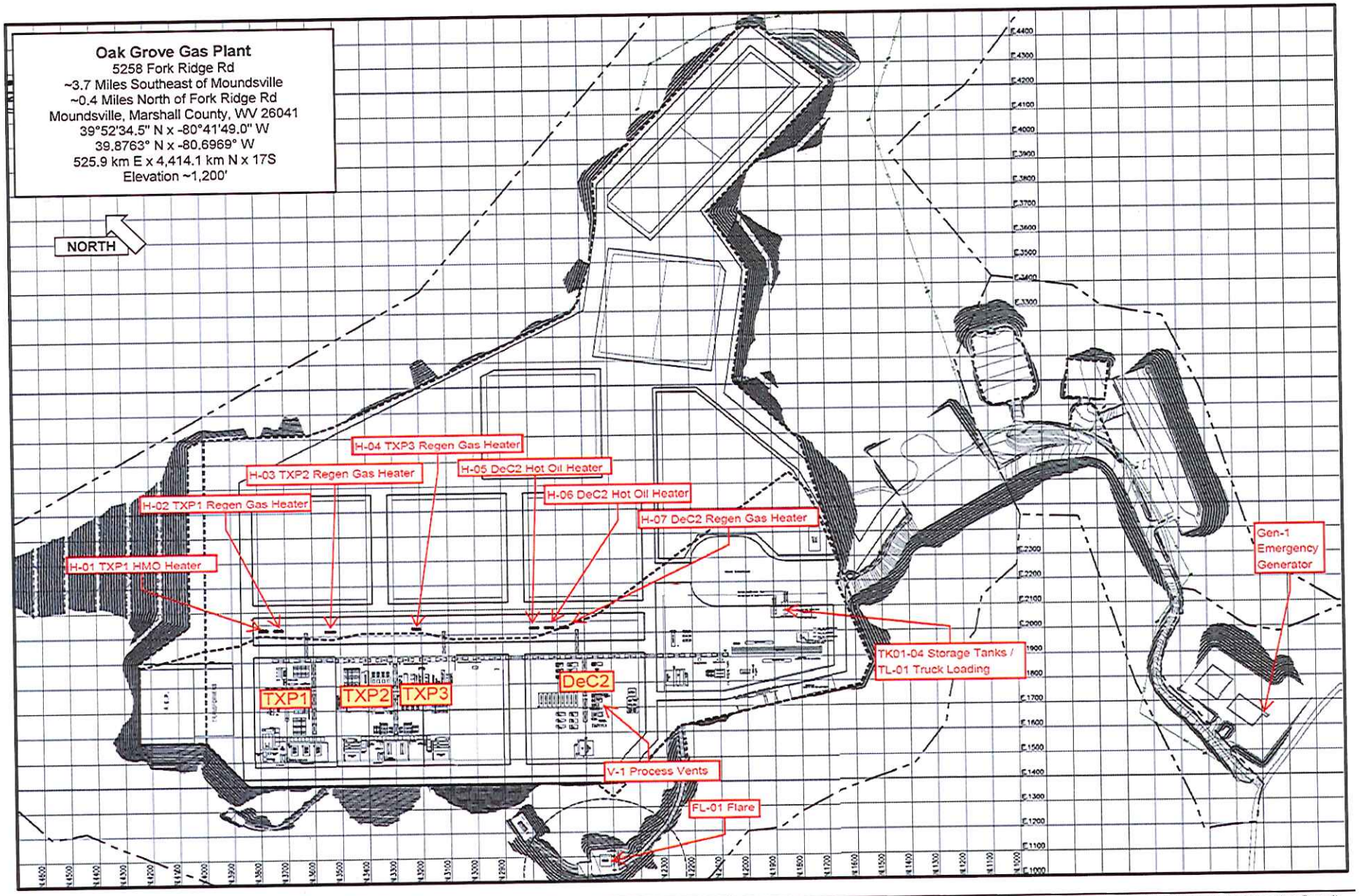
Oak Grove Gas Plant
5258 Fork Ridge Rd
~3.7 Miles Southeast of Moundsville
~0.4 Miles North of Fork Ridge Rd
Moundsville, Marshall County, WV 26041
39°52'34.5" N x -80°41'49.0" W
39.8763° N x -80.6969° W
525.9 km E x 4,414.1 km N x 17S
Elevation ~1,200'
NORTH
H-04 TXP3 Regen Gas Heater
H-03 TXP2 Regen Gas Heater
H-05 DeC2 Hot Oil Heater
H-06 DeC2 Hot Oil Heater
H-02 TXP1 Regen Gas Heater
H-07 DeC2 Regen Gas Heater
H-01 TXP1 HMO Heater
Gen-1 Emergency Generator
TK01-04 Storage Tanks / TL-01 Truck Loading
TXP1
TXP2
TXP3
DeC2
V-1 Process Vents
FL-01 Flare

Aerial View

Oak Grove Gas Plant
5258 Fork Ridge Rd
~3.7 Miles Southeast of Moundsville
~0.4 Miles North of Fork Ridge Rd
Moundsville, Marshall County, WV 26041
39°52'34.5" N x -80°41'49.0" W
39.8763° N x -80.6969° W
525.9 km E x 4,414.1 km N x 17S
Elevation ~1,200'
NORTH
TXP1
TXP2
Heater Bank
Oak Grove GP
TXP3
DeC2
Tanks
Truck Load-Out
Flare
Standby Generator
Fork Ridge Road

ATTACHMENT C

Process Flow Diagram(s) (PFD)

Provide a detailed Process Flow Diagram(s) showing each process or emissions unit as ATTACHMENT C. Process Flow Diagrams should show all emission units, control equipment, emission points, and their relationships.

Williams Ohio Valley Midstream LLC (OVM)

OAK GROVE NATURAL GAS PROCESSING PLANT (GP)

Application for 45CSR30 Title V Operating Permit

Attachment C

PROCESS FLOW DIAGRAM (PFD)

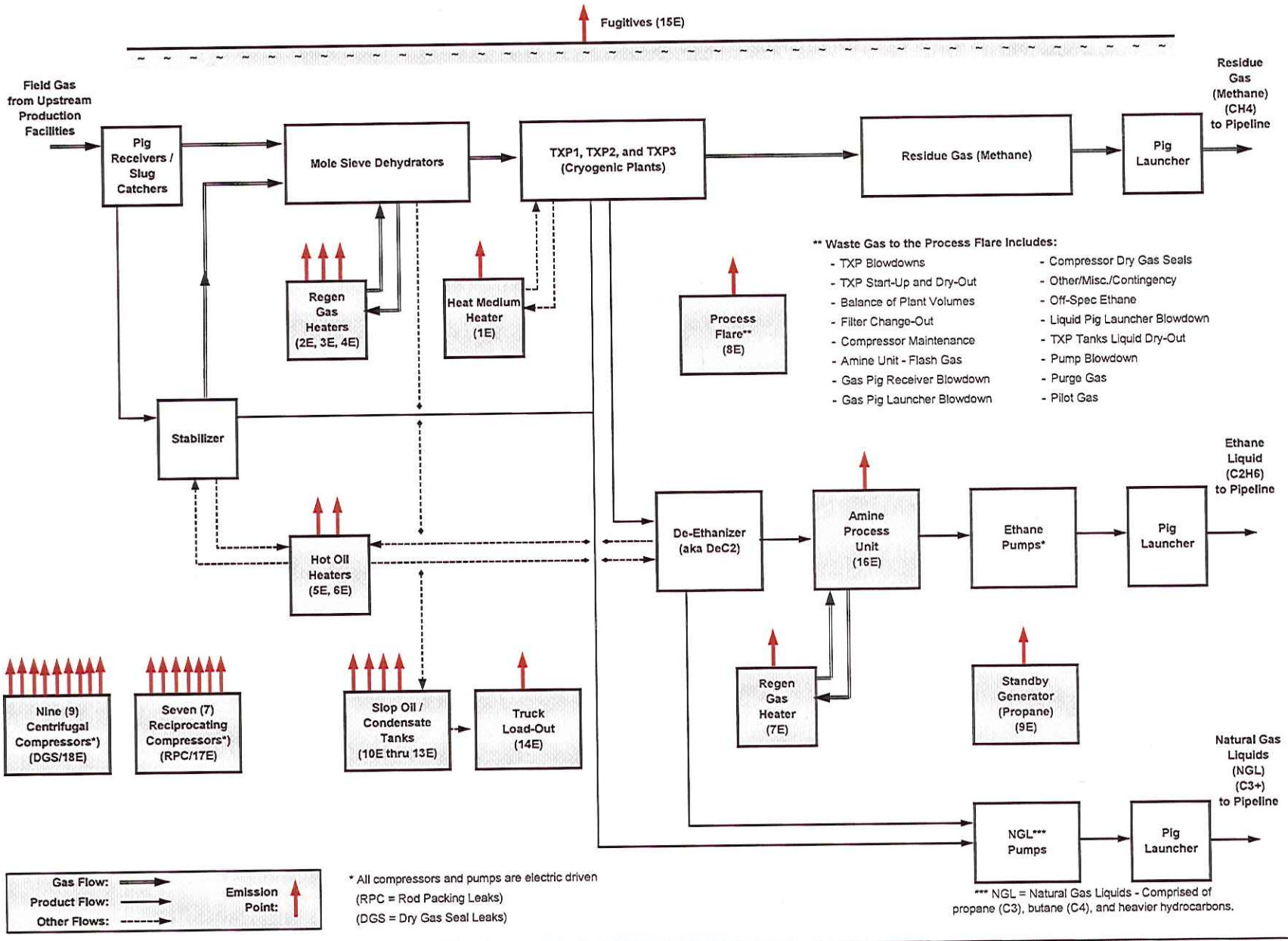

ATTACHMENT D

Title V Equipment Table

Fill out the Title V Equipment Table and provide it as ATTACHMENT D.

Williams Ohio Valley Midstream LLC

OAK GROVE GAS PLANT

Application for 45CSR30 Title V Operating Permit

Attachment D

TITLE V EQUIPMENT TABLE

(includes all emission units at the facility except those designated as insignificant activities in Section 4, Item 24 of the General Forms)

Emission Point ID[1]	Control Device[1]	Emission Unit ID[1]	Emission Unit Description	Design Capacity	Installed/Modified
01E	---	H-01	TXP1 Heat Medium Heater	26.26 MMBtu/hr	2015
02E	---	H-02	TXP1 Regeneration Gas Heater	9.40 MMBtu/hr	2015
03E	---	H-03	TXP2 Regeneration Gas Heater	20.30 MMBtu/hr	tbd
04E	---	H-04	TXP3 Regeneration Gas Heater	20.30 MMBtu/hr	tbd
05E	---	H-05	DeC2 Hot Oil Heater	68.33 MMBtu/hr	2014
06E	---	H-06	DeC2 Hot Oil Heater	68.33 MMBtu/hr	2014
07E	---	H-07	DeC2 Regeneration Gas Heater	10.44 MMBtu/hr	2014
08E	---	FL-1	Process Flare (Blowdown, Dry-Out, APU, Maintenance, Waste Ethane, Purge, etc.)	4,624 MMBtu/hr	2014
09E	---	GEN-1	Standby Generator (Propane-Fired Engine)	224 bhp	2014
10E	---	TK-1	Slop Oil/Condensate Tank	400 bbl	2014
11E	---	TK-2	Slop Oil/Condensate Tank	400 bbl	2014
12E	---	TK-3	Slop Oil/Condensate Tank	400 bbl	2014
13E	---	TK-4	Slop Oil/Condensate Tank	400 bbl	2014
14E	---	TL-1	Truck Load-Out - Slop Oil/Condensate	4,000,000 gal/yr	2014
15E	LDAR	FUG-G	Piping and Equipment Fugitives - Gas	---	2014
		FUG-L	Piping and Equipment Fugitives - Light Liquid		
16E	---	V-01	Amine Process Unit (APU) - Acid Gas	44,000 bbl/day	2014
	FL-1	---	Amine Process Unit (APU) - Flash Gas		
17E	---	RPC	Rod Packing - Electric Recip Compressors	7 Recips	2014
18E	---	DGS	Dry Gas Seals - Electric Centrifugal Comps	9 Centrifugals	2014

Note: The current permit (R13-3070) indicates that all the emission units were installed in 2013, presumably based on the permit issue date of 07/12/13. However, the actual installation/start-up dates are as shown above.

[1] For 45CSR13 permitted sources, the numbering system used for the emission points, control devices, and emission units should be consistent with the numbering system used in the 45CSR13 permit. For grandfathered sources, the numbering system should be consistent with registrations or emissions inventory previously submitted to DAQ. For emission points, control devices, and emissions units which have not been previously labeled, use the following 45CSR13 numbering system: 1S, 2S, 3S,... or other appropriate description for emission units; 1C, 2C, 3C,... or other appropriate designation for control devices; 1E, 2E, 3E, ... or other appropriate designation for emission points.

ATTACHMENT E

Emission Unit Form(s)

For each emission unit listed in the Title V Equipment Table, fill out and provide an Emission Unit Form as ATTACHMENT E.

- 26.26 MMBtu/hr TXP1 Heat Medium Heater (H-01 (01E))
- 9.40 MMBtu/hr TXP1 Regenerator Gas Heater (H-02 (02E))
- 20.30 MMBtu/hr TXP2 & 3 Regenerator Gas Heater (H-03 (03E) & H-04 (04E)) (Each)
- 68.33 MMBtu/hr DeC2 Hot Oil Heaters (H-05 (05E) & H-06 (06E)) (Each)
- 10.44 MMBtu/hr DeC2 Regeneration Gas Heater (H-07 (07E))
- 4,624 MMBtu/hr Process Flare (FL-1 (08E))
- 224 bhp Standby Generator (w/ Gas Engine) (GEN-1 (09E))
- 400 bbl Slop Oil/Condensate Tanks (4x) (TK-1 (10E) thru TK-4 (13E))
- 4,000,000 gal/yr Slop Oil/Condensate Truck Load-Out (TL-1 (14E))
- Piping and Equipment Fugitive Emissions (FUG-G-1 (15E) and FUG-L-1 (15E))
- Amine Process Unit Vent – Acid Gas (V-01 (16E))
- Reciprocating Compressor Rod Packing Leaks (Electric Drive) (7x) (RPC (17E))
- Centrifugal Compressor Dry Gas Seal Leaks (Electric Drive) (9x) (DGS (18E))

Williams Ohio Valley Midstream LLC

OAK GROVE GAS PLANT

Application for 45CSR30 Title V Operating Permit

Attachment E

EMISSION UNIT FORM

Emission Unit Description		H-01 (1E)□
Emission unit ID number H-01 (1E)	**Emission unit name:** TXP1 Heat Medium Heater	**List any control devices associated with this emission unit:** na
Provide a description of the emissions unit (type. Method of operation, design parameters, etc.): Natural gas-fired heat medium heater		
Manufacturer: Heatec	**Model number:** HCI-10010-40-D	**Serial number(s):** HI11-342
Construction date: 2012	**Installation date:** 2015	**Modification date(s):** na
Design Capacity (examples: furnaces - tons/hr, tanks - gallons): 26.26 MMBtu/hr		
Maximum Hourly Throughput: 25,748 scf/hr	**Maximum Annual Throughput:** 225.6 MMscf/yr	**Maximum Operating Schedule:** 8,760 hr/yr
Fuel Usage Data (fill out all applicable fields)		
Does this emission unit combust fuel? _X_ Yes ___No		**If yes, is it?** _X_ Indirect Fired __Direct Fired
Maximum design heat input and/or maximum horsepower rating: 26.26 MMBtu/hr		**Type and Btu/hr rating of burners:** 26.26 MMBtu/hr
List the primary fuel type(s) and if applicable, the secondary fuel type(s). For each fuel type listed, provide the maximum hourly and annual fuel usage for each. Natural gas 25,748 scf/hr 225.6 MMscf/yr		

Describe each fuel expected to be used during the term of the permit.

Fuel Type	Max Sulfur Content	Max Ash Content	BTU Value
Natural gas	<0.01%	negligible	1,020 Btu/scf

Attachment E

EMISSION UNIT FORM (Continued)

Emission Data H-01 (1E)☐

Criteria Pollutants	Pollutant Emissions	
	PPH	TPY
Carbon Monoxide (CO)	2.16	9.47
Nitrogen Oxides (NOX)	2.57	11.28
Lead (Pb)	---	---
Particulate Matter (PM2.5)	0.20	0.86
Particulate Matter (PM10)	0.20	0.86
Total Particulate Matter (TSP)	0.20	0.86
Sulfur Dioxide (SO2)	0.02	0.07
Volatile Organic Compounds (VOC)	0.15	0.64

Hazardous Air Pollutants	Pollutant Emissions	
	PPH	TPY
Benzene	5.4E-05	2.4E-04
Ethylbenzene	---	---
Formaldehyde (HCHO)	1.9E-03	0.01
n-Hexane	0.05	0.20
Toluene	8.8E-05	3.8E-04
2,2,4-Trimethylpentane (TMP)	---	---
Xylenes	---	---
Other HAP	4.9E-05	2.1E-04
Total HAP	0.05	0.21

Regulated Pollutants other than Criteria and HAP	Pollutant Emissions	
	PPH	TPY
Carbon Dioxide (CO2)	3,072	13,456
Methane (CH4) (GWP=25)	6.04	26.46
Nitrous Oxide (N2O) (GWP=298)	0.01	0.03
CO2 Equivalent (CO2e)	3,225	14,125

List the method(s) used to calculate the potential emissions (include dates of any stack tests conducted, versions of software used, source and dates of emission factors, etc.).

Criteria and HAP emission factors: AP-42 Section 1.4 "Natural Gas Combustion" Tables 1.4-1, 1.4-2. and 1.4-3 (July 1998)

GHG emission factors: 40CFR98, Subpart C "General Stationary Fuel Combustion Sources", Tables C-1 and C-2 (12/11/14)

Attachment E

EMISSION UNIT FORM (Continued)

Applicable Requirements **H-01 (1E)□**

List all applicable requirements for this emission unit. For each applicable requirement, include the underlying rule/regulation citation and/or construction permit with the condition number. (Note: Title V permit condition numbers alone are not the underlying applicable requirements). If an emission limit is calculated based on the type of source and design capacity or if a standard is based on a design parameter, this information should also be included.

WVDEP-DAQ Permit R13-3070A (Pending) (Oak Grove Gas Plant)

5.1.1. Maximum design heat input shall not exceed 26.26 MMBtu/hr

5.1.2. Maximum emissions shall not exceed the following limits:

Pollutant	Maximum lb/hr	Maximum ton/yr
NOX	2.57	11.28
CO	2.16	9.47
VOC	0.15	0.64

5.1.3. The hourly quantity of natural gas that shall be consumed shall not exceed 25,748 scf/hr.

5.1.4. The annual quantity of natural gas that shall be consumed shall not exceed 226 MMscf/yr.

5.1.24. Emissions of smoke and/or particulate matter from any fuel burning unit shall not exceed ten percent (10%) opacity based on a six minute block average. [45CSR§2-3.1.]

_X_ Permit Shield

For all applicable requirements listed above, provide monitoring/testing/recordkeeping/reporting which shall be used to demonstrate compliance. If the method is based on a permit or rule, include the condition number or citation. (Note: Each requirement listed above must have an associated method of demonstrating compliance. If there is not already a required method in place, then a method must be proposed.)

WVDEP-DAQ Permit R13-3070A (Pending) (Oak Grove Gas Plant)

5.1.1 - 5.1.4. Maintain a monthly record of the amount of natural gas consumed and hours of operation of the unit. [4OCFR§60.48(c)(g)(2)] [5.4.3]

5.1.1 - 5.1.4. Alternatively, maintain a monthly record of the amount of natural gas delivered to the property during each calendar month. [4OCFR§60.48(c)(g)(3)] [5.4.4]

5.1.24. Compliance with the visible emission requirements shall be determined in accordance with 40CFR60, Appendix A, Method 9. [5.3.1]

Are you in compliance with all applicable requirements for this emission unit? _X_Yes ___No

If no, complete the **Schedule of Compliance Form** as **ATTACHMENT F.**

Williams Ohio Valley Midstream LLC

OAK GROVE GAS PLANT

Application for 45CSR30 Title V Operating Permit

Attachment E

EMISSION UNIT FORM

Emission Unit Description		H-02 (2E)□
Emission unit ID number H-02 (2E)	**Emission unit name:** TXP1 Regen Gas Heater	**List any control devices associated with this emission unit:** na
Provide a description of the emissions unit (type. Method of operation, design parameters, etc.): Natural gas-fired regen gas heater		
Manufacturer: Heatec	**Model number:** HCI-5010-40-G	**Serial number(s):** HI11-278
Construction date: 2012	**Installation date:** 2015	**Modification date(s):** na
Design Capacity (examples: furnaces - tons/hr, tanks - gallons): 9.40 MMBtu/hr		
Maximum Hourly Throughput: 9,216 scf/hr	**Maximum Annual Throughput:** 80.7 MMscf/yr	**Maximum Operating Schedule:** 8,760 hr/yr
Fuel Usage Data (fill out all applicable fields)		
Does this emission unit combust fuel? _X_ Yes ___No		**If yes, is it?** _X_ Indirect Fired __Direct Fired
Maximum design heat input and/or maximum horsepower rating: 9.40 MMBtu/hr		**Type and Btu/hr rating of burners:** 9.40 MMBtu/hr
List the primary fuel type(s) and if applicable, the secondary fuel type(s). For each fuel type listed, provide the maximum hourly and annual fuel usage for each. Natural gas 9,216 scf/hr 80.7 MMscf/yr		

Describe each fuel expected to be used during the term of the permit.

Fuel Type	Max Sulfur Content	Max Ash Content	BTU Value
Natural gas	<0.01%	negligible	1,020 Btu/scf

Attachment E

EMISSION UNIT FORM (Continued)

Emission Data H-02 (2E)□

Criteria Pollutants	Pollutant Emissions	
	PPH	TPY
Carbon Monoxide (CO)	0.77	3.39
Nitrogen Oxides (NOX)	0.92	4.04
Lead (Pb)	---	---
Particulate Matter (PM2.5)	0.07	0.31
Particulate Matter (PM10)	0.07	0.31
Total Particulate Matter (TSP)	0.07	0.31
Sulfur Dioxide (SO2)	0.01	0.02
Volatile Organic Compounds (VOC)	0.05	0.23

Hazardous Air Pollutants	Pollutant Emissions	
	PPH	TPY
Benzene	1.9E-05	8.5E-05
Ethylbenzene	---	---
Formaldehyde (HCHO)	6.9E-04	0.00
n-Hexane	0.02	0.07
Toluene	3.1E-05	1.4E-04
2,2,4-Trimethylpentane (TMP)	---	---
Xylenes	---	---
Other HAP	1.7E-05	7.7E-05
Total HAP	0.02	0.08

Regulated Pollutants other than Criteria and HAP	Pollutant Emissions	
	PPH	TPY
Carbon Dioxide (CO2)	1,100	4,816
Methane (CH4) (GWP=25)	2.16	9.47
Nitrous Oxide (N2O) (GWP=298)	0.00	0.01
CO2 Equivalent (CO2e)	1,154	5,056

List the method(s) used to calculate the potential emissions (include dates of any stack tests conducted, versions of software used, source and dates of emission factors, etc.).

Criteria and HAP emission factors: AP-42 Section 1.4 "Natural Gas Combustion" Tables 1.4-1, 1.4-2. and 1.4-3 (July 1998)

GHG emission factors: 40CFR98, Subpart C "General Stationary Fuel Combustion Sources", Tables C-1 and C-2 (12/11/14)

Attachment E

EMISSION UNIT FORM (Continued)

Applicable Requirements H-02 (2E)□

List all applicable requirements for this emission unit. For each applicable requirement, include the underlying rule/regulation citation and/or construction permit with the condition number. (Note: Title V permit condition numbers alone are not the underlying applicable requirements). If an emission limit is calculated based on the type of source and design capacity or if a standard is based on a design parameter, this information should also be included.

WVDEP-DAQ Permit R13-3070A (Pending) (Oak Grove Gas Plant)

5.1.1. Maximum design heat input shall not exceed 9.40 MMBtu/hr

5.1.5. Maximum emissions shall not exceed the following limits:

Pollutant	Maximum lb/hr	Maximum ton/yr
NOX	0.92	4.04
CO	0.77	3.39
VOC	0.05	0.23

5.1.6. The hourly quantity of natural gas that shall be consumed shall not exceed 9,216 scf/hr.

5.1.7. The annual quantity of natural gas that shall be consumed shall not exceed 80.7 MMscf/yr.

5.1.8. Deleted

5.1.24. Emissions of smoke and/or particulate matter from any fuel burning unit shall not exceed ten percent (10%) opacity based on a six minute block average. [45CSR§2-3.1.]

_X_ Permit Shield

For all applicable requirements listed above, provide monitoring/testing/recordkeeping/reporting which shall be used to demonstrate compliance. If the method is based on a permit or rule, include the condition number or citation. (Note: Each requirement listed above must have an associated method of demonstrating compliance. If there is not already a required method in place, then a method must be proposed.)

WVDEP-DAQ Permit R13-3070A (Pending) (Oak Grove Gas Plant)

5.1.5 - 5.1.7. Maintain a monthly record of the amount of natural gas consumed and hours of operation of the unit. [4OCFR§60.48(c)(g)(2)] [5.4.3]

5.1.5 - 5.1.7. Alternatively, maintain a monthly record of the amount of natural gas delivered to the property during each calendar month. [4OCFR§60.48(c)(g)(3)] [5.4.4]

5.1.24. Compliance with the visible emission requirements shall be determined in accordance with 40CFR60, Appendix A, Method 9. [5.3.1]

Are you in compliance with all applicable requirements for this emission unit? _X_Yes ___No

If no, complete the **Schedule of Compliance Form** as **ATTACHMENT F.**

Williams Ohio Valley Midstream LLC

OAK GROVE GAS PLANT

Application for 45CSR30 Title V Operating Permit

Attachment E

EMISSION UNIT FORM

Emission Unit Description		H-03 (3E) and H-04 (4E) (each)
Emission unit ID number H-03 (3E) and H-04 (4E) (each)	**Emission unit name:** TXP2 & TXP3 Regen Gas Heaters (each)	**List any control devices associated with this emission unit:** na
Provide a description of the emissions unit (type. Method of operation, design parameters, etc.): Natural gas-fired regen gas heaters		
Manufacturer: tbd	**Model number:** tbd	**Serial number(s):** tbd
Construction date: tbd	**Installation date:** tbd	**Modification date(s):** tbd
Design Capacity (examples: furnaces - tons/hr, tanks - gallons): 20.30 MMBtu/hr		
Maximum Hourly Throughput: 19,902 scf/hr	**Maximum Annual Throughput:** 174.3 MMscf/yr	**Maximum Operating Schedule:** 8,760 hr/yr
Fuel Usage Data (fill out all applicable fields)		
Does this emission unit combust fuel? _X_ Yes ___No		**If yes, is it?** _X_ Indirect Fired __Direct Fired
Maximum design heat input and/or maximum horsepower rating: 20.30 MMBtu/hr		**Type and Btu/hr rating of burners:** 20.30 MMBtu/hr
List the primary fuel type(s) and if applicable, the secondary fuel type(s). For each fuel type listed, provide the maximum hourly and annual fuel usage for each. Natural gas 19,902 scf/hr 174.3 MMscf/yr		

Describe each fuel expected to be used during the term of the permit.

Fuel Type	Max Sulfur Content	Max Ash Content	BTU Value
Natural gas	<0.01%	negligible	1,020 Btu/scf

Attachment E

EMISSION UNIT FORM (Continued)

Emission Data	H-03 (3E) and H-04 (4E) (each)	
Criteria Pollutants	**Pollutant Emissions**	
	PPH	**TPY**
Carbon Monoxide (CO)	0.81	3.56
Nitrogen Oxides (NOX)	0.73	3.20
Lead (Pb)	---	---
Particulate Matter (PM2.5)	0.26	1.16
Particulate Matter (PM10)	0.26	1.16
Total Particulate Matter (TSP)	0.26	1.16
Sulfur Dioxide (SO2)	0.01	0.05
Volatile Organic Compounds (VOC)	0.39	1.69
Hazardous Air Pollutants	**Pollutant Emissions**	
	PPH	**TPY**
Benzene	4.2E-05	1.8E-04
Ethylbenzene	---	---
Formaldehyde (HCHO)	1.5E-03	0.01
n-Hexane	0.04	0.16
Toluene	6.8E-05	3.0E-04
2,2,4-Trimethylpentane (TMP)	---	---
Xylenes	---	---
Other HAP	3.8E-05	1.7E-04
Total HAP	0.04	0.16
Regulated Pollutants other than Criteria and HAP	**Pollutant Emissions**	
	PPH	**TPY**
Carbon Dioxide (CO2)	2,375	10,401
Methane (CH4) (GWP=25)	0.14	0.62
Nitrous Oxide (N2O) (GWP=298)	0.00	0.02
CO2 Equivalent (CO2e)	2,380	10,422

List the method(s) used to calculate the potential emissions (include dates of any stack tests conducted, versions of software used, source and dates of emission factors, etc.).

Vendor data: NOx, CO, VOC and CH4. See Supplement 06.

Other Criteria and HAP emission factors: AP-42 Section 1.4 "Natural Gas Combustion" Tables 1.4-1, 1.4-2. and 1.4-3 (July 1998)

GHG emission factors: 40CFR98, Subpart C "General Stationary Fuel Combustion Sources", Tables C-1 and C-2 (12/11/14)

Attachment E

EMISSION UNIT FORM (Continued)

Applicable Requirements H-03 (3E) and H-04 (4E) (each)

List all applicable requirements for this emission unit. For each applicable requirement, include the underlying rule/regulation citation and/or construction permit with the condition number. (Note: Title V permit condition numbers alone are not the underlying applicable requirements). If an emission limit is calculated based on the type of source and design capacity or if a standard is based on a design parameter, this information should also be included.

WVDEP-DAQ Permit R13-3070A (Pending) (Oak Grove Gas Plant)

5.1.1. Maximum design heat input shall not exceed 20.30 MMBtu/hr (each).

5.1.9. Maximum emissions shall not exceed the following limits:

Pollutant	Maximum lb/hr	Maximum ton/yr
NOX	0.73	3.20
CO	0.81	3.56
VOC	0.39	1.69

5.1.10. The hourly quantity of natural gas that shall be consumed shall not exceed 19,902 scf/hr (each)

5.1.11. The annual quantity of natural gas that shall be consumed shall not exceed174.3 MMscf/yr (each).

5.1.12. Deleted

5.1.24. Emissions of smoke and/or particulate matter from any fuel burning unit shall not exceed ten percent (10%) opacity based on a six minute block average. [45CSR§2-3.1.]

_X_ Permit Shield

For all applicable requirements listed above, provide monitoring/testing/recordkeeping/reporting which shall be used to demonstrate compliance. If the method is based on a permit or rule, include the condition number or citation. (Note: Each requirement listed above must have an associated method of demonstrating compliance. If there is not already a required method in place, then a method must be proposed.)

WVDEP-DAQ Permit R13-3070A (Pending) (Oak Grove Gas Plant)

5.1.8 - 5.1.10. Maintain a monthly record of the amount of natural gas consumed and hours of operation of the unit. [4OCFR§60.48(c)(g)(2)] [5.4.3]

5.1.8 - 5.1.10. Alternatively, maintain a monthly record of the amount of natural gas delivered to the property during each calendar month. [4OCFR§60.48(c)(g)(3)] [5.4.4]

5.1.24. Compliance with the visible emission requirements shall be determined in accordance with 40CFR60, Appendix A, Method 9. [5.3.1]

Are you in compliance with all applicable requirements for this emission unit? _X_Yes ___No

If no, complete the **Schedule of Compliance Form** as **ATTACHMENT F.**

Williams Ohio Valley Midstream LLC

OAK GROVE GAS PLANT

Application for 45CSR30 Title V Operating Permit

Attachment E

EMISSION UNIT FORM

Emission Unit Description		H-05 (5E) and H-06 (6E) (each)
Emission unit ID number H-05 (5E) and H-06 (6E) (each)	**Emission unit name:** De-Ethanizer Hot Oil Heaters (each)	**List any control devices associated with this emission unit:** na
Provide a description of the emissions unit (type. Method of operation, design parameters, etc.): Natural gas-fired hot oil heaters		
Manufacturer: Heatec	**Model number:** HCI-25010-50-Q	**Serial number(s):** HI13-010 / HI13-011
Construction date: 2013	**Installation date:** 2014	**Modification date(s):** na
Design Capacity (examples: furnaces - tons/hr, tanks - gallons): 68.33 MMBtu/hr		
Maximum Hourly Throughput: 66,987 scf/hr	**Maximum Annual Throughput:** 586.8 MMscf/yr	**Maximum Operating Schedule:** 8,760 hr/yr
Fuel Usage Data (fill out all applicable fields)		
Does this emission unit combust fuel? _X_ Yes ___No		**If yes, is it?** _X_ Indirect Fired __Direct Fired
Maximum design heat input and/or maximum horsepower rating: 68.33 MMBtu/hr		**Type and Btu/hr rating of burners:** 68.33 MMBtu/hr
List the primary fuel type(s) and if applicable, the secondary fuel type(s). For each fuel type listed, provide the maximum hourly and annual fuel usage for each. Natural gas 66,987 scf/hr 586.8 MMscf/yr		

Describe each fuel expected to be used during the term of the permit.

Fuel Type	Max Sulfur Content	Max Ash Content	BTU Value
Natural gas	<0.01%	negligible	1,020 Btu/scf

Attachment E

EMISSION UNIT FORM (Continued)

Emission Data	H-05 (5E) and H-06 (6E) (each)	
Criteria Pollutants	**Pollutant Emissions**	
	PPH	**TPY**
Carbon Monoxide (CO)	2.53	11.07
Nitrogen Oxides (NOX)	2.46	10.77
Lead (Pb)	---	---
Particulate Matter (PM2.5)	0.51	2.23
Particulate Matter (PM10)	0.51	2.23
Total Particulate Matter (TSP)	0.51	2.23
Sulfur Dioxide (SO2)	0.04	0.18
Volatile Organic Compounds (VOC)	0.38	1.67
Hazardous Air Pollutants	**Pollutant Emissions**	
	PPH	**TPY**
Benzene	1.4E-04	6.2E-04
Ethylbenzene	---	---
Formaldehyde (HCHO)	5.0E-03	0.02
n-Hexane	0.12	0.53
Toluene	2.3E-04	1.0E-03
2,2,4-Trimethylpentane (TMP)	---	---
Xylenes	---	---
Other HAP	1.3E-04	5.6E-04
Total HAP	0.13	0.55
Regulated Pollutants other than Criteria and HAP	**Pollutant Emissions**	
	PPH	**TPY**
Carbon Dioxide (CO2)	7,993	35,008
Methane (CH4) (GWP=25)	15.72	68.83
Nitrous Oxide (N2O) (GWP=298)	0.02	0.07
CO2 Equivalent (CO2e)	8,390	36,749

List the method(s) used to calculate the potential emissions (include dates of any stack tests conducted, versions of software used, source and dates of emission factors, etc.).

Vendor data: NOx, and CO. See Supplement 06.

Other Criteria and HAP emission factors: AP-42 Section 1.4 "Natural Gas Combustion" Tables 1.4-1, 1.4-2. and 1.4-3 (July 1998)

GHG emission factors: 40CFR98, Subpart C "General Stationary Fuel Combustion Sources", Tables C-1 and C-2 (12/11/14)

Attachment E

EMISSION UNIT FORM (Continued)

Applicable Requirements H-05 (5E) and H-06 (6E) (each)

List all applicable requirements for this emission unit. For each applicable requirement, include the underlying rule/regulation citation and/or construction permit with the condition number. (Note: Title V permit condition numbers alone are not the underlying applicable requirements). If an emission limit is calculated based on the type of source and design capacity or if a standard is based on a design parameter, this information should also be included.

WVDEP-DAQ Permit R13-3070A (Pending) (Oak Grove Gas Plant)

5.1.1. Maximum design heat input shall not exceed 68.33 MMBtu/hr (each)

5.1.17. Maximum emissions shall not exceed the following limits (each):

Pollutant	Maximum lb/hr	Maximum ton/yr
NOX	2.46	10.77
CO	2.53	11.07
VOC	0.38	1.67

5.1.18. The hourly quantity of natural gas that shall be consumed shall not exceed 66,987 scf/hr (each).

5.1.19. The annual quantity of natural gas that shall be consumed shall not exceed 586.8 MMscf/yr (each).

5.1.24. Emissions of smoke and/or particulate matter from any fuel burning unit shall not exceed ten percent (10%) opacity based on a six minute block average. [45CSR§2-3.1.]

_X_ Permit Shield

For all applicable requirements listed above, provide monitoring/testing/recordkeeping/reporting which shall be used to demonstrate compliance. If the method is based on a permit or rule, include the condition number or citation. (Note: Each requirement listed above must have an associated method of demonstrating compliance. If there is not already a required method in place, then a method must be proposed.)

WVDEP-DAQ Permit R13-3070A (Pending) (Oak Grove Gas Plant)

5.1.19. Maintain a monthly record of the amount of natural gas consumed and hours of operation of the unit. [4OCFR§60.48(c)(g)(2)] [5.4.3]

5.1.19. Alternatively, maintain a monthly record of the amount of natural gas delivered to the property during each calendar month. [4OCFR§60.48(c)(g)(3)] [5.4.4]

5.1.24. Compliance with the visible emission requirements shall be determined in accordance with 40CFR60, Appendix A, Method 9. [5.3.1]

Are you in compliance with all applicable requirements for this emission unit? _X_Yes ___No

If no, complete the **Schedule of Compliance Form** as **ATTACHMENT F.**

Williams Ohio Valley Midstream LLC

OAK GROVE GAS PLANT

Application for 45CSR30 Title V Operating Permit

Attachment E

EMISSION UNIT FORM

Emission Unit Description		H-07 (7E)□
Emission unit ID number H-07 (7E)	**Emission unit name:** DeC2 Regen Gas Heater	**List any control devices associated with this emission unit:** na
Provide a description of the emissions unit (type. Method of operation, design parameters, etc.): Natural gas-fired regen gas heater		
Manufacturer: Heatec	**Model number:** HCI-6010-50	**Serial number(s):** HI13-009
Construction date: 2013	**Installation date:** 2014	**Modification date(s):** na
Design Capacity (examples: furnaces - tons/hr, tanks - gallons): 10.44 MMBtu/hr		
Maximum Hourly Throughput: 10,237 scf/hr	**Maximum Annual Throughput:** 89.7 MMscf/yr	**Maximum Operating Schedule:** 8,760 hr/yr
Fuel Usage Data (fill out all applicable fields)		
Does this emission unit combust fuel? _X_ Yes ___No		**If yes, is it?** _X_ Indirect Fired __Direct Fired
Maximum design heat input and/or maximum horsepower rating: 10.44 MMBtu/hr		**Type and Btu/hr rating of burners:** 10.44 MMBtu/hr
List the primary fuel type(s) and if applicable, the secondary fuel type(s). For each fuel type listed, provide the maximum hourly and annual fuel usage for each. Natural gas 10,237 scf/hr 89.7 MMscf/yr		

Describe each fuel expected to be used during the term of the permit.

Fuel Type	Max Sulfur Content	Max Ash Content	BTU Value
Natural gas	<0.01%	negligible	1,020 Btu/scf

Attachment E

EMISSION UNIT FORM (Continued)

Emission Data H-07 (7E)□

Criteria Pollutants	Pollutant Emissions	
	PPH	TPY
Carbon Monoxide (CO)	0.86	3.77
Nitrogen Oxides (NOX)	1.02	4.48
Lead (Pb)	---	---
Particulate Matter (PM2.5)	0.08	0.34
Particulate Matter (PM10)	0.08	0.34
Total Particulate Matter (TSP)	0.08	0.34
Sulfur Dioxide (SO2)	0.01	0.03
Volatile Organic Compounds (VOC)	0.06	0.25

Hazardous Air Pollutants	Pollutant Emissions	
	PPH	TPY
Benzene	2.1E-05	9.4E-05
Ethylbenzene	---	---
Formaldehyde (HCHO)	7.7E-04	3.4E-03
n-Hexane	0.02	0.08
Toluene	3.5E-05	1.5E-04
2,2,4-Trimethylpentane (TMP)	---	---
Xylenes	---	---
Other HAP	1.9E-05	8.5E-05
Total HAP	0.02	0.08

Regulated Pollutants other than Criteria and HAP	Pollutant Emissions	
	PPH	TPY
Carbon Dioxide (CO2)	1,221	5,350
Methane (CH4) (GWP=25)	2.40	10.52
Nitrous Oxide (N2O) (GWP=298)	0.00	0.01
CO2 Equivalent (CO2e)	1,282	5,616

List the method(s) used to calculate the potential emissions (include dates of any stack tests conducted, versions of software used, source and dates of emission factors, etc.).

Criteria and HAP emission factors: AP-42 Section 1.4 "Natural Gas Combustion" Tables 1.4-1, 1.4-2. and 1.4-3 (July 1998)

GHG emission factors: 40CFR98, Subpart C "General Stationary Fuel Combustion Sources", Tables C-1 and C-2 (12/11/14)

Attachment E

EMISSION UNIT FORM (Continued)

Applicable Requirements H-07 (7E)□

List all applicable requirements for this emission unit. For each applicable requirement, include the underlying rule/regulation citation and/or construction permit with the condition number. (Note: Title V permit condition numbers alone are not the underlying applicable requirements). If an emission limit is calculated based on the type of source and design capacity or if a standard is based on a design parameter, this information should also be included.

WVDEP-DAQ Permit R13-3070A (Pending) (Oak Grove Gas Plant)

5.1.1. Maximum design heat input shall not exceed 20.44 MMBtu/hr

5.1.20. Maximum emissions shall not exceed the following limits:

Pollutant	Maximum lb/hr	Maximum ton/yr
NOX	1.02	4.48
CO	0.86	3.77
VOC	0.06	0.25

5.1.21. The hourly quantity of natural gas that shall be consumed shall not exceed 10,237 scf/hr.

5.1.22. The annual quantity of natural gas that shall be consumed shall not exceed 89.7 MMscf/yr.

5.1.23. Deleted

5.1.24. Emissions of smoke and/or particulate matter from any fuel burning unit shall not exceed ten percent (10%) opacity based on a six minute block average. [45CSR§2-3.1.]

_X_ Permit Shield

For all applicable requirements listed above, provide monitoring/testing/recordkeeping/reporting which shall be used to demonstrate compliance. If the method is based on a permit or rule, include the condition number or citation. (Note: Each requirement listed above must have an associated method of demonstrating compliance. If there is not already a required method in place, then a method must be proposed.)

WVDEP-DAQ Permit R13-3070A (Pending) (Oak Grove Gas Plant)

5.1.20 - 5.1.22 Maintain a monthly record of the amount of natural gas consumed and hours of operation of the unit. [4OCFR§60.48(c)(g)(2)] [5.4.3]

5.1.20 - 5.1.22 Alternatively, maintain a monthly record of the amount of natural gas delivered to the property during each calendar month. [4OCFR§60.48(c)(g)(3)] [5.4.4]

5.1.24. Compliance with the visible emission requirements shall be determined in accordance with 40CFR60, Appendix A, Method 9. [5.3.1]

Are you in compliance with all applicable requirements for this emission unit? _X_Yes ___No

If no, complete the **Schedule of Compliance Form** as **ATTACHMENT F.**

Williams Ohio Valley Midstream LLC

OAK GROVE GAS PLANT

Application for 45CSR30 Title V Operating Permit

Attachment E

EMISSION UNIT FORM

Emission Unit Description		FL-1 (8E)□
Emission unit ID number FL-1 (8E)	**Emission unit name:** Process Flare	**List any control devices associated with this emission unit:** na
Provide a description of the emissions unit (type. Method of operation, design parameters, etc.): Process Flare		
Manufacturer: Zeeco USA LLC	**Model number:** Flare Tip: AFTA-24/80 - Air-Assist	**Serial number(s):**
Construction date:	**Installation date:** 2014	**Modification date(s):** na
Design Capacity (examples: furnaces - tons/hr, tanks - gallons): 4,623.68 MMBtu/hr (HHV)		
Maximum Hourly Throughput: 2,566,068 scf/hr	**Maximum Annual Throughput:** 630.2 MMscf/yr	**Maximum Operating Schedule:** 8,760 hr/yr
Fuel Usage Data (fill out all applicable fields)		
Does this emission unit combust fuel? _X_ Yes ___No		**If yes, is it?** ___ Indirect Fired _X_Direct Fired
Maximum design heat input and/or maximum horsepower rating: 4,624 MMBtu/hr (HHV)		**Type and Btu/hr rating of burners:** 4,624 MMBtu/hr (HHV)
List the primary fuel type(s) and if applicable, the secondary fuel type(s). For each fuel type listed, provide the maximum hourly and annual fuel usage for each. Waste Gas		

Describe each fuel expected to be used during the term of the permit.

Fuel Type	Max Sulfur Content	Max Ash Content	BTU Value
Waste Gas (average)	<0.01%	negligible	1,685 Btu/scf

Attachment E

EMISSION UNIT FORM (Continued)

Emission Data FL-1 (8E)□

Criteria Pollutants	Pollutant Emissions	
	PPH	TPY
Carbon Monoxide (CO)	1,273.82	146.28
Nitrogen Oxides (NOX)	638.07	73.27
Lead (Pb)	---	---
Particulate Matter (PM2.5)	19.50	2.39
Particulate Matter (PM10)	19.50	2.39
Total Particulate Matter (TSP)	19.50	2.39
Sulfur Dioxide (SO2)	1.54	0.19
Volatile Organic Compounds (VOC)	177.29	20.36

Hazardous Air Pollutants	Pollutant Emissions	
	PPH	TPY
Benzene	4.49	0.52
Ethylbenzene	6.09	0.70
Formaldehyde (HCHO)	0.34	0.04
n-Hexane	5.48	0.63
Toluene	5.30	0.61
2,2,4-Trimethylpentane (TMP)	6.55	0.75
Xylenes	6.11	0.70
Other HAP	0.01	9.9E-04
Total HAP	34.38	3.95

Regulated Pollutants other than Criteria and HAP	Pollutant Emissions	
	PPH	TPY
Carbon Dioxide (CO2)	723,375	83,066
Methane (CH4) (GWP=25)	217	25
Nitrous Oxide (N2O) (GWP=298)	595	68
CO2 Equivalent (CO2e)	906,247	104,066

List the method(s) used to calculate the potential emissions (include dates of any stack tests conducted, versions of software used, source and dates of emission factors, etc.).

Vendor data, AP-42, engineering judgment, and mass balance.

GHG emission factors: 40CFR98, Subpart C "General Stationary Fuel Combustion Sources", Tables C-1 and C-2 (12/11/14)

Attachment E

EMISSION UNIT FORM (Continued)

Applicable Requirements FL-1 (8E)□

List all applicable requirements for this emission unit. For each applicable requirement, include the underlying rule/regulation citation and/or construction permit with the condition number. (Note: Title V permit condition numbers alone are not the underlying applicable requirements). If an emission limit is calculated based on the type of source and design capacity or if a standard is based on a design parameter, this information should also be included.

WVDEP-DAQ Permit R13-3070A (Pending) (Oak Grove Gas Plant)

6.1.1. The maximum waste gas throughput to the flare shall not exceed 630.19 MMscf/yr.

6.1.2. Maximum emissions shall not exceed the following limits:

Pollutant	Maximum lb/hr	Maximum ton/yr
NOX	638.07	73.27
CO	1,273.82	146.28
VOC	177.29	20.36
CO2e	906,247	104,066

6.1.3.b. Flare shall be designed for and operated with no visible emissions, except for periods not to exceed a total of 5 minutes during any 2 consecutive hours

6.1.3.c Flare shall be operated, with a flame present at all times whenever emissions may be vented to them, except during SSM (Startup, Shutdown, Malfunctions) events.

_X_ Permit Shield

For all applicable requirements listed above, provide monitoring/testing/recordkeeping/reporting which shall be used to demonstrate compliance. If the method is based on a permit or rule, include the condition number or citation. (Note: Each requirement listed above must have an associated method of demonstrating compliance. If there is not already a required method in place, then a method must be proposed.)

WVDEP-DAQ Permit R13-3070A (Pending) (Oak Grove Gas Plant)

6.1.2. Monitor the presence or absence of a flare pilot flame using a thermocouple or any other equivalent device, except during SSM events. [6.2.1.]

6.1.2. Monitor the throughput on a monthly basis. [6.2.2.]

6.1.2. Maintain a record of the flare design evaluation. [6.4.2.]

6.1.3.b. Conduct a Method 22 opacity test for at least two hours. [6.3.1.]

6.1.3.c. Maintain records of the times and duration of all periods which the pilot flame was absent. [6.4.1.]

Are you in compliance with all applicable requirements for this emission unit? _X_Yes ___No

If no, complete the **Schedule of Compliance Form** as **ATTACHMENT F.**

Williams Ohio Valley Midstream LLC

OAK GROVE GAS PLANT

Application for 45CSR30 Title V Operating Permit

Attachment E

EMISSION UNIT FORM

Emission Unit Description		GEN-1 (9E)
Emission unit ID number GEN-1 (9E)	**Emission unit name:** Standby Generator Engine (Propane) (EPA Certified)	**List any control devices associated with this emission unit:** na
Provide a description of the emissions unit (type. Method of operation, design parameters, etc.): Propane-fired standby generator engine		
Manufacturer: Olympian	**Model number:** G150LG2	**Serial number(s):** GXC02911
Construction date:	**Installation date:** 2014	**Modification date(s):** na
Design Capacity (examples: furnaces - tons/hr, tanks - gallons): 224 bhp		
Maximum Hourly Throughput: na	**Maximum Annual Throughput:** na	**Maximum Operating Schedule:** 500 Hr/yr
Fuel Usage Data (fill out all applicable fields)		
Does this emission unit combust fuel? _X_ Yes ___No		**If yes, is it?** ___ Indirect Fired _X_Direct Fired
Maximum design heat input and/or maximum horsepower rating: 224 bhp		**Type and Btu/hr rating of burners:**
List the primary fuel type(s) and if applicable, the secondary fuel type(s). For each fuel type listed, provide the maximum hourly and annual fuel usage for each. Propane: 878 scf/hr 0.44 MMscf/yr		

Describe each fuel expected to be used during the term of the permit.

Fuel Type	Max Sulfur Content	Max Ash Content	BTU Value
Propane	0.25 grains/100 scf	negligible	2,516 Btu/scf

Attachment E

EMISSION UNIT FORM (Continued)

Emission Data — GEN-1 (9E)

Criteria Pollutants	Pollutant Emissions	
	PPH	TPY
Carbon Monoxide (CO)	1.98	0.49
Nitrogen Oxides (NOX)	0.99	0.25
Lead (Pb)	---	---
Particulate Matter (PM2.5)	0.49	0.01
Particulate Matter (PM10)	0.49	0.01
Total Particulate Matter (TSP)	0.49	0.01
Sulfur Dioxide (SO2)	0.59	0.00
Volatile Organic Compounds (VOC)	1.10	0.13

Hazardous Air Pollutants	Pollutant Emissions	
	PPH	TPY
Benzene	3.5E-03	8.7E-04
Ethylbenzene	5.4E-05	1.4E-05
Formaldehyde (HCHO)	0.04	0.01
n-Hexane	---	---
Toluene	1.2E-03	3.1E-04
2,2,4-Trimethylpentane (TMP)	---	---
Xylenes	4.3E-04	1.1E-04
Other HAP	0.02	0.01
Total HAP	0.07	0.02

Regulated Pollutants other than Criteria and HAP	Pollutant Emissions	
	PPH	TPY
Carbon Dioxide (CO2)	304	76
Methane (CH4) (GWP=25)	0.5	0.13
Nitrous Oxide (N2O) (GWP=298)	4.8E-04	1.2E-04
CO2 Equivalent (CO2e)	317	79

List the method(s) used to calculate the potential emissions (include dates of any stack tests conducted, versions of software used, source and dates of emission factors, etc.).

Vendor data and AP-42

Attachment E

EMISSION UNIT FORM (Continued)

Applicable Requirements GEN-1 (9E)

List all applicable requirements for this emission unit. For each applicable requirement, include the underlying rule/regulation citation and/or construction permit with the condition number. (Note: Title V permit condition numbers alone are not the underlying applicable requirements). If an emission limit is calculated based on the type of source and design capacity or if a standard is based on a design parameter, this information should also be included.

WVDEP-DAQ Permit R13-3070A (Pending) (Oak Grove Gas Plant)

7.1.1. Maximum design heat input shall not 878 scf/hr and 0.44 MMscf/yr.

7.1.2. Maximum emissions shall not exceed the following limits:

Pollutant	Maximum lb/hr	Maximum ton/yr
NOX	0.99	0.25
CO	1.98	0.49
VOC	0.54	0.13

7.1.3. The maximum operation shall not exceed 500 hrs/yr.

_X_ Permit Shield

For all applicable requirements listed above, provide monitoring/testing/recordkeeping/reporting which shall be used to demonstrate compliance. If the method is based on a permit or rule, include the condition number or citation. (Note: Each requirement listed above must have an associated method of demonstrating compliance. If there is not already a required method in place, then a method must be proposed.)

WVDEP-DAQ Permit R13-3070A (Pending) (Oak Grove Gas Plant)

7.1.1 -7.1.2 Maintain maintain records of the hours of operation of the engine [7.2.1]

Are you in compliance with all applicable requirements for this emission unit? _X_Yes ___No

If no, complete the **Schedule of Compliance Form** as **ATTACHMENT F.**

Williams Ohio Valley Midstream LLC

OAK GROVE GAS PLANT

Application for 45CSR30 Title V Operating Permit

Attachment E

EMISSION UNIT FORM

Emission Unit Description		TK-1 (10E) thru TK-4 (13E)
Emission unit ID number TK-1 (10E) thru TK-4 (13E)	**Emission unit name:** 4 x 400 bbl Slop Oil/Condensate Storage Tanks	**List any control devices associated with this emission unit:** na
Provide a description of the emissions unit (type. Method of operation, design parameters, etc.): 4 x 400 bbl Slop Oil/Condensate Storage Tanks		
Manufacturer: na	**Model number:** na	**Serial number(s):** na
Construction date: na	**Installation date:** 2014	**Modification date(s):** na
Design Capacity (examples: furnaces - tons/hr, tanks - gallons): 400 bbl (aech)		
Maximum Hourly Throughput: na	**Maximum Annual Throughput:** 4,000,000 gal/yr total tanks	**Maximum Operating Schedule:** 8,760 hr/yr
Fuel Usage Data (fill out all applicable fields)		
Does this emission unit combust fuel? ___ Yes _X_No		**If yes, is it?** Na ___ Indirect Fired ___Direct Fired
Maximum design heat input and/or maximum horsepower rating: na		**Type and Btu/hr rating of burners:** na
List the primary fuel type(s) and if applicable, the secondary fuel type(s). For each fuel type listed, provide the maximum hourly and annual fuel usage for each. na		

Describe each fuel expected to be used during the term of the permit.

Fuel Type	Max Sulfur Content	Max Ash Content	BTU Value
na			

Attachment E

EMISSION UNIT FORM (Continued)

Emission Data		TK-1 (10E) thru TK-4 (13E)
Criteria Pollutants	**Pollutant Emissions**	
	PPH	**TPY**
Carbon Monoxide (CO)	---	---
Nitrogen Oxides (NOX)	---	---
Lead (Pb)	---	---
Particulate Matter (PM2.5)	---	---
Particulate Matter (PM10)	---	---
Total Particulate Matter (TSP)	---	---
Sulfur Dioxide (SO2)	---	---
Volatile Organic Compounds (VOC)	4.33	18.96
Hazardous Air Pollutants	**Pollutant Emissions**	
	PPH	**TPY**
Benzene	0.14	0.63
Ethylbenzene	0.14	0.63
Formaldehyde (HCHO)	---	---
n-Hexane	0.14	0.63
Toluene	0.14	0.63
2,2,4-Trimethylpentane (TMP)	0.14	0.63
Xylenes	0.14	0.63
Other HAP	---	---
Total HAP	0.87	3.79
Regulated Pollutants other than Criteria and HAP	**Pollutant Emissions**	
	PPH	**TPY**
Carbon Dioxide (CO2)	---	---
Methane (CH4) (GWP=25)	---	---
Nitrous Oxide (N2O) (GWP=298)	---	---
CO2 Equivalent (CO2e)	---	---

List the method(s) used to calculate the potential emissions (include dates of any stack tests conducted, versions of software used, source and dates of emission factors, etc.).

Vendor data and AP-42

Attachment E

EMISSION UNIT FORM (Continued)

Applicable Requirements **TK-1 (10E) thru TK-4 (13E)**

List all applicable requirements for this emission unit. For each applicable requirement, include the underlying rule/regulation citation and/or construction permit with the condition number. (Note: Title V permit condition numbers alone are not the underlying applicable requirements). If an emission limit is calculated based on the type of source and design capacity or if a standard is based on a design parameter, this information should also be included.

WVDEP-DAQ Permit R13-3070A (Pending) (Oak Grove Gas Plant)

12.1.1. Maximum throughput shall not exceed 4,000,000 gallons/yr total for all tanks.

_X_ Permit Shield

For all applicable requirements listed above, provide monitoring/testing/recordkeeping/reporting which shall be used to demonstrate compliance. If the method is based on a permit or rule, include the condition number or citation. (Note: Each requirement listed above must have an associated method of demonstrating compliance. If there is not already a required method in place, then a method must be proposed.)

WVDEP-DAQ Permit R13-3070A (Pending) (Oak Grove Gas Plant)

12.1.1 Maintain maintain records of the throughput [12.2.1]

Are you in compliance with all applicable requirements for this emission unit? _X_Yes ___No

If no, complete the **Schedule of Compliance Form** as **ATTACHMENT F.**

Williams Ohio Valley Midstream LLC

OAK GROVE GAS PLANT

Application for 45CSR30 Title V Operating Permit

Attachment E

EMISSION UNIT FORM

Emission Unit Description		TL-1 (14E)
Emission unit ID number TL-1 (14E)	**Emission unit name:** Slop Oil/Condensate Truck Load-Out	**List any control devices associated with this emission unit:** na
Provide a description of the emissions unit (type. Method of operation, design parameters, etc.): Slop Oil/Condensate Truck Load-Out		
Manufacturer: na	**Model number:** na	**Serial number(s):** na
Construction date: na	**Installation date:** 2014	**Modification date(s):** na
Design Capacity (examples: furnaces - tons/hr, tanks - gallons): na		
Maximum Hourly Throughput: na	**Maximum Annual Throughput:** 4,000,000 gal/yr	**Maximum Operating Schedule:** na
Fuel Usage Data (fill out all applicable fields)		
Does this emission unit combust fuel? ___ Yes _X_No		**If yes, is it?** Na ___ Indirect Fired ___Direct Fired
Maximum design heat input and/or maximum horsepower rating: na		**Type and Btu/hr rating of burners:** na
List the primary fuel type(s) and if applicable, the secondary fuel type(s). For each fuel type listed, provide the maximum hourly and annual fuel usage for each. na		

Describe each fuel expected to be used during the term of the permit.

Fuel Type	Max Sulfur Content	Max Ash Content	BTU Value
na			

Attachment E

EMISSION UNIT FORM (Continued)

Emission Data — TL-1 (14E)

Criteria Pollutants	Pollutant Emissions	
	PPH	TPY
Carbon Monoxide (CO)	---	---
Nitrogen Oxides (NOX)	---	---
Lead (Pb)	---	---
Particulate Matter (PM2.5)	---	---
Particulate Matter (PM10)	---	---
Total Particulate Matter (TSP)	---	---
Sulfur Dioxide (SO2)	---	---
Volatile Organic Compounds (VOC)	27.13	18.09

Hazardous Air Pollutants	Pollutant Emissions	
	PPH	TPY
Benzene	0.90	0.60
Ethylbenzene	0.90	0.60
Formaldehyde (HCHO)	---	---
n-Hexane	0.90	0.60
Toluene	0.90	0.60
2,2,4-Trimethylpentane (TMP)	0.90	0.60
Xylenes	0.90	0.60
Other HAP	---	---
Total HAP	5.43	3.62

Regulated Pollutants other than Criteria and HAP	Pollutant Emissions	
	PPH	TPY
Carbon Dioxide (CO2)	---	---
Methane (CH4) (GWP=25)	---	---
Nitrous Oxide (N2O) (GWP=298)	---	---
CO2 Equivalent (CO2e)	---	---

List the method(s) used to calculate the potential emissions (include dates of any stack tests conducted, versions of software used, source and dates of emission factors, etc.).

EPA emissions factors, AP-42, and Mass Balance.

EMISSION UNIT FORM (Continued)

Applicable Requirements **TL-1 (14E)**

List all applicable requirements for this emission unit. For each applicable requirement, include the underlying rule/regulation citation and/or construction permit with the condition number. (Note: Title V permit condition numbers alone are not the underlying applicable requirements). If an emission limit is calculated based on the type of source and design capacity or if a standard is based on a design parameter, this information should also be included.

WVDEP-DAQ Permit R13-3070A (Pending) (Oak Grove Gas Plant)

11.1.1. Maximum quantity of slop oil (condensate) loaded shall not exceed 4,000,000 gallons/yr.

_X_ Permit Shield

For all applicable requirements listed above, provide monitoring/testing/recordkeeping/reporting which shall be used to demonstrate compliance. If the method is based on a permit or rule, include the condition number or citation. (Note: Each requirement listed above must have an associated method of demonstrating compliance. If there is not already a required method in place, then a method must be proposed.)

WVDEP-DAQ Permit R13-3070A (Pending) (Oak Grove Gas Plant)

11.1.1 Maintain records of the slop oil (condensate) loadout [11.2.1]

Are you in compliance with all applicable requirements for this emission unit? _X_Yes ___No

If no, complete the **Schedule of Compliance Form** as **ATTACHMENT F.**

Williams Ohio Valley Midstream LLC

OAK GROVE GAS PLANT

Application for 45CSR30 Title V Operating Permit

Attachment E

EMISSION UNIT FORM

Emission Unit Description		FUG-G (15E) and FUG-L (15E)
Emission unit ID number FUG-G (15E) and FUG-L (15E)	**Emission unit name:** Process Piping Fugitives – Gas / Light Liquid	**List any control devices associated with this emission unit:** na
Provide a description of the emissions unit (type. Method of operation, design parameters, etc.): Fugitive emissions from plant piping and equipment		
Manufacturer: na	**Model number:** na	**Serial number(s):** na
Construction date: na	**Installation date:** 2014	**Modification date(s):** na
Design Capacity (examples: furnaces - tons/hr, tanks - gallons): na		
Maximum Hourly Throughput: na	**Maximum Annual Throughput:** na	**Maximum Operating Schedule:** 8,760 hr/yr
Fuel Usage Data (fill out all applicable fields)		
Does this emission unit combust fuel? ___ Yes _X_No		**If yes, is it?** na ___ Indirect Fired ___Direct Fired
Maximum design heat input and/or maximum horsepower rating: na		**Type and Btu/hr rating of burners:** na
List the primary fuel type(s) and if applicable, the secondary fuel type(s). For each fuel type listed, provide the maximum hourly and annual fuel usage for each. na		

Describe each fuel expected to be used during the term of the permit.

Fuel Type	Max Sulfur Content	Max Ash Content	BTU Value
na			

Attachment E

EMISSION UNIT FORM (Continued)

Emission Data		FUG-G (15E) and FUG-L (15E)
Criteria Pollutants	**Pollutant Emissions**	
	PPH	**TPY**
Carbon Monoxide (CO)	---	---
Nitrogen Oxides (NOX)	---	---
Lead (Pb)	---	---
Particulate Matter (PM2.5)	---	---
Particulate Matter (PM10)	---	---
Total Particulate Matter (TSP)	---	---
Sulfur Dioxide (SO2)	---	---
Volatile Organic Compounds (VOC)	9.70	42.50
Hazardous Air Pollutants	**Pollutant Emissions**	
	PPH	**TPY**
Benzene	0.02	0.10
Ethylbenzene	0.02	0.10
Formaldehyde (HCHO)	---	---
n-Hexane	0.02	0.10
Toluene	0.02	0.10
2,2,4-Trimethylpentane (TMP)	0.02	0.10
Xylenes	0.02	0.10
Other HAP	---	---
Total HAP	0.14	0.60
Regulated Pollutants other than Criteria and HAP	**Pollutant Emissions**	
	PPH	**TPY**
Carbon Dioxide (CO2)	0.1	0.4
Methane (CH4) (GWP=25)	10	45
Nitrous Oxide (N2O) (GWP=298)	---	---
CO2 Equivalent (CO2e)	255	1118

List the method(s) used to calculate the potential emissions (include dates of any stack tests conducted, versions of software used, source and dates of emission factors, etc.).

EPA emissions factors, AP-42, and Mass Balance.

Attachment E

EMISSION UNIT FORM (Continued)

Applicable Requirements **FUG-G (15E) and FUG-L (15E)**

List all applicable requirements for this emission unit. For each applicable requirement, include the underlying rule/regulation citation and/or construction permit with the condition number. (Note: Title V permit condition numbers alone are not the underlying applicable requirements). If an emission limit is calculated based on the type of source and design capacity or if a standard is based on a design parameter, this information should also be included.

WVDEP-DAQ Permit R13-3070A (Pending) (Oak Grove Gas Plant)

9.1.1. Maximum wet natural gas throughput through the Gas Processing Plant shall not exceed 600 MMscf/day

_X_ Permit Shield

For all applicable requirements listed above, provide monitoring/testing/recordkeeping/reporting which shall be used to demonstrate compliance. If the method is based on a permit or rule, include the condition number or citation. (Note: Each requirement listed above must have an associated method of demonstrating compliance. If there is not already a required method in place, then a method must be proposed.)

WVDEP-DAQ Permit R13-3070A (Pending) (Oak Grove Gas Plant)

9.1.1. Maintain records of the amount of natural gas processed in the Gas Processing Plant. [9.5.1]

Are you in compliance with all applicable requirements for this emission unit? _X_Yes ___No

If no, complete the **Schedule of Compliance Form** as **ATTACHMENT F.**

Williams Ohio Valley Midstream LLC

OAK GROVE GAS PLANT

Application for 45CSR30 Title V Operating Permit

Attachment E

EMISSION UNIT FORM

Emission Unit Description		V-01 (16E)
Emission unit ID number V-01 (16E)	**Emission unit name:** Amine Process Unit (APU) - Acid Gas	**List any control devices associated with this emission unit:** na
Provide a description of the emissions unit (type. Method of operation, design parameters, etc.): The ethane product stream is processed in an amine treatment unit to remove carbon dioxide (CO2) prior to off-site shipment via pipeline. The acid gas (>95% CO2) is vented to the atmosphere. The flash gas (>96% Ethane) is routed to the flare.		
Manufacturer: na	**Model number:** na	**Serial number(s):** na
Construction date: na	**Installation date:** 2014	**Modification date(s):** na
Design Capacity (examples: furnaces - tons/hr, tanks - gallons): na		
Maximum Hourly Throughput: na	**Maximum Annual Throughput:** na	**Maximum Operating Schedule:** 8,760 hr/yr
Fuel Usage Data (fill out all applicable fields)		
Does this emission unit combust fuel? ___ Yes _X_No		**If yes, is it?** Na ___ Indirect Fired ___Direct Fired
Maximum design heat input and/or maximum horsepower rating: na		**Type and Btu/hr rating of burners:** na
List the primary fuel type(s) and if applicable, the secondary fuel type(s). For each fuel type listed, provide the maximum hourly and annual fuel usage for each. na		

Describe each fuel expected to be used during the term of the permit.

Fuel Type	Max Sulfur Content	Max Ash Content	BTU Value
na			

Attachment E

EMISSION UNIT FORM (Continued)

Emission Data		V-01 (16E)
Criteria Pollutants	**Pollutant Emissions**	
	PPH	**TPY**
Carbon Monoxide (CO)	---	---
Nitrogen Oxides (NOX)	---	---
Lead (Pb)	---	---
Particulate Matter (PM2.5)	---	---
Particulate Matter (PM10)	---	---
Total Particulate Matter (TSP)	---	---
Sulfur Dioxide (SO2)	---	---
Volatile Organic Compounds (VOC)	0.17	0.30
Hazardous Air Pollutants	**Pollutant Emissions**	
	PPH	**TPY**
Benzene	2.4E-03	6.1E-04
Ethylbenzene	2.4E-03	6.1E-04
Formaldehyde (HCHO)	0.01	2.3E-03
n-Hexane	2.4E-03	6.1E-04
Toluene	2.4E-03	6.1E-04
2,2,4-Trimethylpentane (TMP)	2.4E-03	6.1E-04
Xylenes	2.4E-03	6.1E-04
Other HAP	---	---
Total HAP	0.01	3.7E-03
Regulated Pollutants other than Criteria and HAP	**Pollutant Emissions**	
	PPH	**TPY**
Carbon Dioxide (CO2)	63	16
Methane (CH4) (GWP=25)	13	58
Nitrous Oxide (N2O) (GWP=298)	---	---
CO2 Equivalent (CO2e)	394	1,454

List the method(s) used to calculate the potential emissions (include dates of any stack tests conducted, versions of software used, source and dates of emission factors, etc.).

Vendor data (DOW ProComp Software) was utilized to develop emissions factors.

EMISSION UNIT FORM (Continued)

Applicable Requirements **V-01 (16E)**

List all applicable requirements for this emission unit. For each applicable requirement, include the underlying rule/regulation citation and/or construction permit with the condition number. (Note: Title V permit condition numbers alone are not the underlying applicable requirements). If an emission limit is calculated based on the type of source and design capacity or if a standard is based on a design parameter, this information should also be included.

WVDEP-DAQ Permit R13-3070A (Pending) (Oak Grove Gas Plant)

10.1.1. Maximum ethane feedstock shall not exceed 44,000 bbl/day.

10.1.3. Maximum emissions vented to the atmosphere shall not exceed the following limits

Pollutant	Maximum lb/hr	Maximum ton/yr
VOC	0.11	0.49
CO2	4,733	20,732
CH4	0.17	0.74

_X_ Permit Shield

For all applicable requirements listed above, provide monitoring/testing/recordkeeping/reporting which shall be used to demonstrate compliance. If the method is based on a permit or rule, include the condition number or citation. (Note: Each requirement listed above must have an associated method of demonstrating compliance. If there is not already a required method in place, then a method must be proposed.)

WVDEP-DAQ Permit R13-3070A (Pending) (Oak Grove Gas Plant)

10.1.3 Monitor the throughput of C3+ feedstock on a monthly basis. [10.2.1]

Are you in compliance with all applicable requirements for this emission unit? _X_Yes ___No

If no, complete the **Schedule of Compliance Form** as **ATTACHMENT F.**

Williams Ohio Valley Midstream LLC

OAK GROVE GAS PLANT

Application for 45CSR30 Title V Operating Permit

Attachment E

EMISSION UNIT FORM

Emission Unit Description		RPC (17E)
Emission unit ID number RPC (17E)	**Emission unit name:** Compressor Rod Packing Leaks	**List any control devices associated with this emission unit:** na
Provide a description of the emissions unit (type. Method of operation, design parameters, etc.): Compressor rod packing generates gas leaks from the wear of mechanical joints, seals, and rotating surfaces over time.		
Manufacturer: na	**Model number:** na	**Serial number(s):** na
Construction date: na	**Installation date:** 2014	**Modification date(s):** na
Design Capacity (examples: furnaces - tons/hr, tanks - gallons): na		
Maximum Hourly Throughput: na	**Maximum Annual Throughput:** na	**Maximum Operating Schedule:** 8,760 hr/yr
Fuel Usage Data (fill out all applicable fields)		
Does this emission unit combust fuel? ___ Yes _X_No		**If yes, is it?** Na ___ Indirect Fired ___Direct Fired
Maximum design heat input and/or maximum horsepower rating: na		**Type and Btu/hr rating of burners:** na
List the primary fuel type(s) and if applicable, the secondary fuel type(s). For each fuel type listed, provide the maximum hourly and annual fuel usage for each. na		
Describe each fuel expected to be used during the term of the permit.		

Fuel Type	Max Sulfur Content	Max Ash Content	BTU Value
na			

Attachment E

EMISSION UNIT FORM (Continued)

Emission Data		RPC (17E)
Criteria Pollutants	**Pollutant Emissions**	
	PPH	**TPY**
Carbon Monoxide (CO)	---	---
Nitrogen Oxides (NOX)	---	---
Lead (Pb)	---	---
Particulate Matter (PM2.5)	---	---
Particulate Matter (PM10)	---	---
Total Particulate Matter (TSP)	---	---
Sulfur Dioxide (SO2)	---	---
Volatile Organic Compounds (VOC)	0.06	0.27
Hazardous Air Pollutants	**Pollutant Emissions**	
	PPH	**TPY**
Benzene	---	---
Ethylbenzene	---	---
Formaldehyde (HCHO)	---	---
n-Hexane	---	---
Toluene	---	---
2,2,4-Trimethylpentane (TMP)	---	---
Xylenes	---	---
Other HAP	---	---
Total HAP	---	---
Regulated Pollutants other than Criteria and HAP	**Pollutant Emissions**	
	PPH	**TPY**
Carbon Dioxide (CO2)	---	---
Methane (CH4) (GWP=25)	13	57
Nitrous Oxide (N2O) (GWP=298)	---	---
CO2 Equivalent (CO2e)	328	1,437

List the method(s) used to calculate the potential emissions (include dates of any stack tests conducted, versions of software used, source and dates of emission factors, etc.).

Vendor data, operational experience, engineering judgment, and AP-42.

EMISSION UNIT FORM (Continued)

Applicable Requirements RPC (17E)

List all applicable requirements for this emission unit. For each applicable requirement, include the underlying rule/regulation citation and/or construction permit with the condition number. (Note: Title V permit condition numbers alone are not the underlying applicable requirements). If an emission limit is calculated based on the type of source and design capacity or if a standard is based on a design parameter, this information should also be included.

WVDEP-DAQ Permit R13-3070A (Pending) (Oak Grove Gas Plant)

9.1.2.a. Either:

1) Collect and route reciprocating compressor rod packing leaks to a control device (FL-1 (08E)); or

2) Replace reciprocating compressor rod packing at intervals not to exceed 26,000 hours of operation or 36 months.

Note: The three TXP1 residue gas compressors rod packing is replaced every 26,000 hrs of operation

The four stabilized gas compressors rod packing is routed to a control device (FL-1).

_X_ Permit Shield

For all applicable requirements listed above, provide monitoring/testing/recordkeeping/reporting which shall be used to demonstrate compliance. If the method is based on a permit or rule, include the condition number or citation. (Note: Each requirement listed above must have an associated method of demonstrating compliance. If there is not already a required method in place, then a method must be proposed.)

WVDEP-DAQ Permit R13-3070A (Pending) (Oak Grove Gas Plant)

9.1.2.a. Demonstrate initial compliance as required by § 60.5410. [9.1.2.b]

9.1.2.a. Demonstrate continuous compliance as required by § 60.5415. [9.1.2.c]

9.1.2.a. Perform the required notification, recordkeeping, and reporting as required by §60.5420. [9.1.2.d]

Are you in compliance with all applicable requirements for this emission unit? _X_Yes ___No

If no, complete the **Schedule of Compliance Form** as **ATTACHMENT F.**

Williams Ohio Valley Midstream LLC

OAK GROVE GAS PLANT

Application for 45CSR30 Title V Operating Permit

Attachment E

EMISSION UNIT FORM

Emission Unit Description		DGS (18E)
Emission unit ID number DGS (18E)	**Emission unit name:** Centrifugal Compressor Dry Gas Seal Leaks	**List any control devices associated with this emission unit:** na
Provide a description of the emissions unit (type. Method of operation, design parameters, etc.): Gas leaks from centrifugal compressors		
Manufacturer: na	**Model number:** na	**Serial number(s):** na
Construction date: na	**Installation date:** 2014	**Modification date(s):** na
Design Capacity (examples: furnaces - tons/hr, tanks - gallons): na		
Maximum Hourly Throughput: na	**Maximum Annual Throughput:** na	**Maximum Operating Schedule:** 8,760 hr/yr
Fuel Usage Data (fill out all applicable fields)		
Does this emission unit combust fuel? ___ Yes _X_No		**If yes, is it?** Na ___ Indirect Fired ___Direct Fired
Maximum design heat input and/or maximum horsepower rating: na		**Type and Btu/hr rating of burners:** na
List the primary fuel type(s) and if applicable, the secondary fuel type(s). For each fuel type listed, provide the maximum hourly and annual fuel usage for each. na		
Describe each fuel expected to be used during the term of the permit.		

Fuel Type	Max Sulfur Content	Max Ash Content	BTU Value
na			

Attachment E

EMISSION UNIT FORM (Continued)

Emission Data		DGS (18E)
Criteria Pollutants	**Pollutant Emissions**	
	PPH	**TPY**
Carbon Monoxide (CO)	---	---
Nitrogen Oxides (NOX)	---	---
Lead (Pb)	---	---
Particulate Matter (PM2.5)	---	---
Particulate Matter (PM10)	---	---
Total Particulate Matter (TSP)	---	---
Sulfur Dioxide (SO2)	---	---
Volatile Organic Compounds (VOC)	0.86	3.77
Hazardous Air Pollutants	**Pollutant Emissions**	
	PPH	**TPY**
Benzene	1.9E-03	0.01
Ethylbenzene	1.9E-03	0.01
Formaldehyde (HCHO)	---	---
n-Hexane	1.9E-03	0.01
Toluene	1.9E-03	0.01
2,2,4-Trimethylpentane (TMP)	1.9E-03	0.01
Xylenes	1.9E-03	0.01
Other HAP	---	---
Total HAP	0.01	0.05
Regulated Pollutants other than Criteria and HAP	**Pollutant Emissions**	
	PPH	**TPY**
Carbon Dioxide (CO2)	0.02	0.07
Methane (CH4) (GWP=25)	23	102
Nitrous Oxide (N2O) (GWP=298)	---	---
CO2 Equivalent (CO2e)	584	2,557

List the method(s) used to calculate the potential emissions (include dates of any stack tests conducted, versions of software used, source and dates of emission factors, etc.).

Vendor data, operational experience, engineering judgment, and AP-42.

Attachment E

EMISSION UNIT FORM (Continued)

Applicable Requirements **DGS (18E)**

List all applicable requirements for this emission unit. For each applicable requirement, include the underlying rule/regulation citation and/or construction permit with the condition number. (Note: Title V permit condition numbers alone are not the underlying applicable requirements). If an emission limit is calculated based on the type of source and design capacity or if a standard is based on a design parameter, this information should also be included.

WVDEP-DAQ Permit R13-3070A (Pending) (Oak Grove Gas Plant)

13.1 na

_X_ Permit Shield

For all applicable requirements listed above, provide monitoring/testing/recordkeeping/reporting which shall be used to demonstrate compliance. If the method is based on a permit or rule, include the condition number or citation. (Note: Each requirement listed above must have an associated method of demonstrating compliance. If there is not already a required method in place, then a method must be proposed.)

WVDEP-DAQ Permit R13-3070A (Pending) (Oak Grove Gas Plant)

13.2 na

Are you in compliance with all applicable requirements for this emission unit? _X_Yes ___No

If no, complete the **Schedule of Compliance Form** as **ATTACHMENT F.**

ATTACHMENT F

Compliance Schedule

For each emission unit not in compliance with an applicable requirement, fill out a Schedule of Compliance Form as ATTACHMENT F.

ATTACHMENT F - Schedule of Compliance Form	
Complete this section if you indicated noncompliance with any of the applicable requirements identified in the permit application. For each emission unit which is not in compliance, identify the applicable requirement, the reason(s) for noncompliance, a description of how the source will achieve compliance, and a detailed schedule of compliance. If there is a consent order that applies to this requirement, attach a copy to this form.	
1. Applicable Requirement	
Unit(s): Process Flare, FL-1 (8E)	**Applicable Requirement:** Condition 6.1.1 (Flare throughput limitation) and Condition 6.1.2 (Flare allowable emission limits)
2. Reason for Noncompliance: The waste gas throughput to the flare is higher than the allowable limit of 85.5 MMscf/year resulting in emissions above the allowable limits.	
3. How will Compliance be Achieved? A 45CSR13 permit application was submitted to the WVDEP in January 2015 to increase the flare waste gas throughput and allowable emission limits.	
4. Consent Order Number (if applicable): Consent Order is not yet final	
5. Schedule of Compliance. Provide a schedule of remedial measures, including an enforceable sequence of actions with milestones, leading to compliance, including a date for final compliance.	
Remedial Measure or Action	Date to be Achieved
Submit 45CSR13 permit application	Completed – January 2015
6. Submittal of Progress Reports. Not Applicable – No further action is necessary for the applicant.	
Content of Progress Report: na	**Report starting date:** MM/DD/YYYY **Submittal frequency:** na

ATTACHMENT G

Air Pollution Control Devices (APCD) Forms

For each control device listed in the Title V Equipment Table, fill out and provide an Air Pollution Control Device Form as ATTACHMENT G.

- Process Flare FL-1 (08E))

Williams Ohio Valley Midstream LLC

OAK GROVE GAS PLANT

Application for 45CSR30 Title V Operating Permit

Attachment G

AIR POLLUTION CONTROL DEVICE FORM

Control Device ID Number	**List all emission units associated with this control device.** Sources of Waste Gas:		
FL-01 (8E)	* TXP Blowdowns	* Amine Unit - Flash Gas	* Liquid Pig Launcher
	* TXP Start-Up/Dry-Out	* Gas Pig Receiver	* TXP Tank Dry-Out
	* Balance of Plant Volumes	* Gas Pig Launcher	* Pump Blowdown
	* Filter Change-Out	* Dry Gas Seals	* Misc./Contingency
	* Maintenance	* Off-Spec Ethane	* Purge Gas/Pilot Gas

Provide a description of the emissions unit (type. Method of operation, design parameters, etc.):

Manufacturer:	**Model number:**	**Installation date:**
Zeeco USA LLC	Flare Tip: AFTA-24/80 - Air-Assist	2014

Type of Air Pollution Control Device:

___ Baghouse/Fabric Filter	___ Venturi Scrubber	___ Multiclone
___ Carbon Bed Adsorber	___ Packed Tower Scrubber	___ Single Cyclone
___ Carbon Drum(s)	___ Other Wet Scrubber	___ Cyclone Bank
___ Catalytic Incinerator	___ Condenser	___ Settling Chamber
___ Thermal Incinerator	_X_ Flare	___ Other (describe) _____
___ Wet Plate Electrostatic Precipitator	___ Dry Plate Electrostatic Precipitator	

List the pollutants for which this device is intended to control and the capture and control efficiencies.

Pollutant	Capture Efficiency	Control Efficiency
Volatile Organic Compounds (VOC)	Assume 100%	99%

Explain the characteristic design parameters of this control device (flow rates, pressure drops, number of bags, size, temperatures, etc.).

Design flow rate: 208,000 lb/hr (Peak) Flare system is designed for 99% destruction efficiency

Design smokeless rate: 87,350 lb/hr

Max. Exit Velocity: 1,196 ft/sec

Is this device subject to the CAM requirements of 40 C.F.R. 64? ___ **Yes** _X_ **No**

If Yes, **Complete ATTACHMENT H**

If No, **Provide justification.**

This rule does not apply because there no pollutant-specific emission units subject to an emissions limitation or standard (e.g., NSPS, NESHAP, HAP, NSR, PSD, SIP), with pre-controlled emissions greater than Title V major source thresholds, that require an add-on control device to achieve compliance.

Describe the parameters monitored and/or methods used to indicate performance of this control device.

* The pilot flame shall be present at all times when emissions may be vented to it.
* The presence of the pilot flame shall be monitored.
* The flare shall be operated with no visible emissions except for periods not to exceed a total of five minutes in any two consecutive minutes.

(40CFR§60.18(b))

ATTACHMENT H

Compliance Assurance Monitoring (CAM)

(Not Applicable)

Fill out and provide Compliance Assurance Monitoring (CAM) Form(s), if applicable, for each Pollutant Specific Emission Unit (PSEU) as ATTACHMENT H.

This rule does not apply because there are no pollutant-specific emission units subject to an emissions limitation or standard (e.g., NSPS, NESHAP, HAP, NSR, PSD, SIP), with pre-controlled emissions greater than Title V major source thresholds, that require an add-on control device to achieve compliance.

SUPPLEMENT 01

Process Description

A. Project Overview
B. Stabilizer
C. Molecular Sieve Dehydration Unit
D. Cryogenic Turboexpansion (TXP) Process
E. Heaters
F. Process Flare
G. Standby Generator Engine
H. Storage Tanks
I. Truck Load-Out
J. Amine Process Unit
K. Compressor Rod Packing and Dry Gas Seal Leaks

Williams Ohio Valley Midstream LLC

OAK GROVE GAS PLANT

Application for 45CSR30 Title V Operating Permit

Supplement 01

PROCESS DESCRIPTION

A. Project Overview

Williams Ohio Valley Midstream LLC owns and operates the Oak Grove Gas Plant in Marshall County (See Attachment A – Area (Topo) Map). The facility is designed to process 600 MMscfd of natural gas received via pipeline. Three product streams are generated:

1. Residue Gas (i. e., dry, "clean", methane (CH_4)) is compressed for off-site shipment via natural gas transmission pipeline.
2. Ethane (C_2H_6) Liquid (amine treated to remove CO_2) is pumped for off-site shipment via liquid pipeline.
3. Natural Gas Liquids (NGL (C3+), including stabilized condensate, are also pumped for off-site shipment via liquid pipeline.

B. Stabilizer

The facility operations commence with a slug catcher to remove free liquids from the inlet natural gas. The raw condensate stream enters the stabilizer unit where it is heated to remove the lighter end hydrocarbons (methane, ethane and propane). These lighter end hydrocarbons are compressed and commingled with raw inlet gas for further processing. The stabilized condensate liquids are commingled with other natural gas liquids (NGLs) for off-site shipment.

The stabilizer is a totally enclosed system, so the only emissions are fugitives from piping and equipment. These emissions are controlled by implementation of a leak detection and repair (LDAR) program.

C. Molecular Sieve Dehydration Unit

Mole sieves are used to remove water from the inlet gas stream as requisite for the following cryogenic processes. The operation starts with the wet gas entering the adsorption tower at the top which contains the molecular sieve desiccant. The gas exits the bottom of the vessel dry. While one tower is adsorbing, the other tower is regenerating. For regeneration, gas is heated up to 550 °F and is sent to the tower in regeneration to extract the water from the molecular sieves. As the saturated gas leaves the top of the vessel, it is cooled in a condenser and then the condensed water is separated. The two towers switch between adsorbing and regenerating on a fixed cycle.

The mole sieves are totally enclosed systems, so the only emissions are fugitives from piping and equipment. These emissions are controlled by implementation of a leak detection and repair (LDAR) program.

D. Cryogenic Turboexpansion (TXP) Process

The cryogenic process utilizes an expansion turbine to drop the temperature of the Inlet Gas to approximately minus 120 degrees Fahrenheit. This rapid temperature drop condenses much of the ethane (C_2H_6) and most of the other hydrocarbons (primarily propane (C_3H_8), butane (C_4H_{10}) and pentane (C_5H_{12})), with de-minimis hexane, benzene, toluene, ethyl-benzene, xylene, etc. (together C6+)), while maintaining methane (CH_4) in gaseous form.

The TXPs are totally enclosed systems, so the only emissions are fugitives from piping and equipment. These emissions are controlled by implementation of a leak detection and repair (LDAR) program.

E. Heaters

Natural gas-fueled heaters are used at the facility in the various gas processing areas. Emissions are generated from combustion of natural gas.

F. Process Flare

The process flare is used to safely combust waste gas streams generated during routine operations, general maintenance activities, and in the event of an upset. The amount of gas routed to the flare during a given event will vary widely. Emissions are of two types:

1) Combustion gases estimated as per AP-42 emission factors, plus
2) Incomplete combustion gases estimated at 99% control efficiency.

G. Standby Generator Engine

A gas-fired (propane) standby generator is used to provide electrical power for various activities at the site in the event of loss of purchase power.

H. Storage Tanks

There are numerous tanks at the facility used to store various materials such as produced water, lube oil, heat medium (oil), amine, diesel fuel, and motor gasoline. The slop oil/condensate tanks are the only tanks with significant emissions to the atmosphere. All other storage tanks at the site have de-minimis emissions.

I. Truck Load-Out

There are de minimis VOC emissions from truck loading of slop oil/condensate.

J. Amine Process Unit

The ethane product stream is further processed in an amine treatment unit to remove carbon dioxide (CO_2) prior to off-site shipment via pipeline. The acid gas (>95% CO_2) is vented to the atmosphere. The flash gas (>96% Ethane) is routed to the flare.

K. Compressor Rod Packing and Dry Gas Seal Leaks

Emissions are generated from reciprocating and centrifugal compressors that are utilized throughout the plant. The compressors generate emissions from the wear of mechanical joints, seals, and rotating surfaces over time. The rod packing leaks from the stabilized gas reciprocating compressors are routed to the Flare whereas the rod packing leaks from the regen gas compressors are vented to atmosphere.

SUPPLEMENT 02

Regulatory Discussion

A. Applicability of New Source Review (NSR) Regulations

1. Prevention of Significant Deterioration (PSD)
2. Nonattainment New Source Review (NNSR)
3. Hazardous Air Pollutants (HAPs)
4. Title V Operating Permits (TVOP)

B. Applicability of Federal Regulations

1. NSPS A, General Provisions
2. NSPS A, Control Devices – Flares
3. NSPS D (also Da and Db), Steam Generating Units
4. NSPS Dc – Steam Generating Units
5. NSPS K (also Ka and Kb), Volatile Organic Liquid Storage Vessels
6. NSPS GG, Stationary Gas Turbines
7. NSPS KKK – Leaks from Natural Gas Processing Plants
8. NSPS LLL – Onshore Natural Gas Processing: SO2 Emissions
9. NSPS IIII – Compression Ignition Reciprocating Internal Combustion Engines (RICE)
10. NSPS JJJJ – Stationary Spark Ignition (SI) Internal Combustion Engines (ICE)
11. NSPS KKKK – Stationary Combustion Turbines
12. NSPS OOOO – Oil and Natural Gas Production, Transmission and Distribution
13. NESHAP Part 61 – Designated Source Standards
14. NESHAP A (Part 63 (aka MACT) – General Provisions
15. NESHAP HH – Oil and Natural Gas Production Facilities
16. NESHAP HHH – Natural Gas Transmission and Storage Facilities
17. NESHAP YYYY – Stationary Combustion Turbines
18. NESHAP ZZZZ – Stationary Reciprocating Internal Combustion Engines (RICE)
19. NESHAP DDDDD – Industrial-Commercial-Institutional Boilers and Process Heaters
20. NESHAP JJJJJ – Industrial-Commercial-Institutional Boilers – Area Sources
21 RMP – Chemical Accident Prevention (and Risk Management Plan)
22. CAM – Compliance Assurance Monitoring
23. GHG – Mandatory Greenhouse Gases (GHG) Reporting

C. Applicability of Source Aggregation

Continued...

SUPPLEMENT 02

Regulatory Discussion

(Continued)

D. Applicability of State Regulations

1. Particulate Air Pollution from Combustion of Fuel
2. Prevent and Control of Objectionable Odors
3. Control of Air Pollution from Combustion of Refuse
4. Prevention and Control of Air Pollution – Sulfur Oxides
5. Permits for Construction, Modification, Relocation and Operation
6. Permits for Construction and Major Modifications of Major Sources
7. Standards of Performance for New Stationary Sources (40 CFR Part 60)
8. Permits for Construction and Modification (Nonattainment)
9. Regulation of Volatile Organic Compounds (VOC)
10. Air Quality Management Fees Program
11. Prevent and Control Emissions of Toxic Air Pollutants
12. Air Pollution Emissions Banking and Trading
13. Emission Statements for VOC and NOX
14. Requirements for Operating Permits
15. Emission Standards for Hazardous Air Pollutants (HAP)

Williams Ohio Valley Midstream LLC

OAK GROVE GAS PLANT

Application for 45CSR30 Title V Operating Permit

Supplement 02

REGULATORY DISCUSSION

A. Applicability of New Source Review (NSR) Regulations

The following New Source Review (NSR) regulations are potentially applicable to natural gas processing facilities (aka, gas plants). Applicability to the subject facility has been determined as follows:

1. Prevention of Significant Deterioration (PSD) [Not Applicable]

This rule does not apply. The facility is a "PSD Minor Source" for each regulated pollutant, as follows:

- NOx: PSD Natural Minor Source with Pre-Controlled PTE < 250 tpy
- CO: PSD Natural Minor Source with Pre-Controlled PTE < 250 tpy
- VOC: PSD Synthetic Minor Source with Controlled PTE < 250 tpy
- SO2: PSD Natural Minor Source with Pre-Controlled PTE < 250 tpy
- PM10/2.5: PSD Natural Minor Source with Pre-Controlled PTE < 250 tpy

(Note: Fugitive emissions from natural gas processing facilities are ***in***cluded in the PSD Major Source Determination in accordance with Section 2.26.b of 45CSR30.)

2. Non-Attainment New Source Review (NNSR) [Not Applicable]

This rule does not apply. The facility location is designated as either "Maintenance" or "Attainment/Unclassified" for all criteria pollutants, except for sulfur dioxide. The plant-wide potential-to-emit (PTE) sulfur dioxide is less than applicable thresholds.

3. Major Source of Hazardous Air Pollutants (HAPs) [Not Applicable]

This rule does not apply. The facility qualifies as a "HAP Area Source" for each regulated HAP, as follows:

- Each HAP: HAP Area Source with Controlled Individual HAP PTE < 10 tpy
- Total HAP: HAP Area Source with Controlled Total of All HAPs PTE < 25 tpy

4. Title V Operating Permit (TVOP) [Applicable]

This rule does apply. The facility is subject to Title V permit requirements because the potential to emit (PTE) nitrogen oxides (NOx), carbon monoxide (CO) and volatile organic compounds (VOC) is ≥ 100 tpy (WVDEP requires fugitive emissions to be ***in***cluded at gas plants) as follows:

- **NOx: TVOP Major Source with Controlled PTE ≥ 100 tpy**
- **CO: TVOP Major Source with Controlled PTE ≥ 100 tpy**
- **VOC: TVOP Major Source with Controlled PTE ≥ 100 tpy**

- SO2: TVOP Natural Minor Source with Pre-Controlled PTE < 100 tpy
- PM10/2.5: TVOP Natural Minor Source with Pre-Controlled PTE < 100 tpy
- Each HAP: TVOP Synthetic Minor Source with Controlled PTE < 10 tpy
- Total HAPs: TVOP Synthetic Minor Source with Controlled PTE < 25 tpy

Furthermore, because the facility is an "anyway" Title V source, it is also subject to Title V permit requirements because the potential to emit (PTE) carbon dioxide equivalent (CO2e) is ≥ 100,000 tpy:

- **CO2e: TVOP Major Source with Controlled PTE ≥ 100,000 tpy**

B. Applicability of Federal Regulations

The following federal regulations are potentially applicable to gas plants. Applicability to the facility has been determined as follows:

1. **NSPS A, General Provisions**
   40CFR§60.1-§60.19 [Applicable]

   This rule does apply to all sources subject to an NSPS (unless a specific provision is excluded within the source NSPS). Requirements include notification, monitoring, and recordkeeping.

2. **NSPS A, Control Devices - Flares**
   40CFR§60.18(b) [Applicable]

   This rule does apply to the Process Flare (FL-01, 8E) because it is used to comply with NSPS OOOO (40CFR§60.5360-§60.5430). Requirements include:

   - The pilot flame shall be present at all times when emissions may be vented to it.
   - The presence of the pilot flame shall be monitored.
   - The flare shall be operated with no visible emissions except for periods not to exceed a total of five minutes in any two consecutive minutes.

3. **NSPS D (also Da and Db), Steam Generating Units**
   40CFR§60.40-§60.48 [Not Applicable]

   These rules do not apply because there is no boiler (or heater) at the facility with a maximum design heat input (MDHI) capacity > 100 MMBtu/hr (§60.40b(a)).

4. **NSPS Dc, Steam Generating Units**
   40CFR§60.40c-§60.48c [Applicable]

   This rule does apply to the TXP1 Heat Medium Heater (H-01 (1E)), TXP2 & TXP3 Regen Gas Heaters (H-03 (3E) and H-04 (4E)), De-Ethanizer Hot Oil Heaters (H-05 (5E) and H-06 (6E)), and Amine Process Regen Gas Heater (H-07 (7E)) because each has a maximum design heat input (MDHI) capacity ≥ 10 MMBtu/hr and ≤ 100 MMBtu/hr (§60.40c(a)).

   Requirements include recording and maintaining records of the amount of natural gas fuel combusted during each calendar month (§60.48c(g)(2)).

   This rule does not apply to the TXP1 Regen Gas Heater (H-02 (2E)) because it has a MDHI capacity < 10 MMBtu/hr (§60.40c(a)).

5. **NSPS K (also Ka and Kb), Volatile Organic Liquid Storage Vessels**
   40CFR§60.40-§60.48 [Not Applicable]

   This rule does not apply because there is no tank with capacity ≥ 75 m3 (471.7 bbl or 19,813 gal) that is used to store volatile organic liquids (VOL) at the facility (§60.110b(a)).

6. **NSPS GG, Stationary Gas Turbines**
   40CFR§60.330-§60.335 [Not Applicable]

   This rule does not apply because there is no stationary gas turbine at the facility (§60.330).

7. **NSPS KKK, Leaks from Natural Gas Processing Plants**
   40CFR§60.630-§60.636 [Not Applicable]

   This rule does not apply because plant construction commenced after 08/23/11 (§60.630). (However, see NSPS OOOO, below.)

8. **NSPS LLL, Onshore Natural Gas Processing: SO2 Emissions**
   40CFR§60.640-§60.648 [Not Applicable]

   This rule does not apply because there is no sweetening unit at the facility as defined in §60.641.

9. **NSPS IIII, Compression Ignition Reciprocating Internal Combustion Engines**
   40CFR§60.4200-§60.4219 [Not Applicable]

   This rule does not apply because there is no stationary compression ignition engine at the facility (§60.4200(a)).

10. **NSPS JJJJ, Stationary Spark Ignition (SI) Internal Combustion Engines (ICE)**
    40CFR§60.4230-§60.4248 [Applicable]

    This rule does apply to the Standby Generator Engine (GEN-1 (9E)) because it was constructed (ordered), modified, or reconstructed after 06/12/06, is an emergency engine manufactured on or after 01/01/09, and has a maximum engine power > 19 KW (25 HP) (§60.4230(a)(4)(iii))

    Compliance is achieved by purchasing an EPA Certified Engine and operating the engine in accordance with the manufacturer's emission-related written instructions.

11. **NSPS KKKK, Stationary Combustion Turbines**
    40CFR§60.4300-§60.4420 [Not Applicable]

    This rule does not apply because there is no stationary combustion turbine at the facility (§60.4300).

12. **NSPS OOOO, Crude Oil and Natural Gas Production**
40CFR§60.5360-§60.5430 [Applicable]

This rule does apply because the facility is a natural gas processing plant (including fractionators) constructed, reconstructed, or modified after August 23, 2011.

Requirements include monitoring and repair of valves, flanges, connectors, pumps, pressure relief devices and open-ended valves or lines. The equipment leak standards are specified in §60.5400. Also subject to the notification, recordkeeping, and reporting as specified in §60.5420.

Additionally, the seven reciprocating gas compressors are subject to NSPS OOOO requirements. Requirements include replacement of the compressor rod packing on the three TXP1 residue gas compressors every 26,000 hours of operation and routing the rod packing leaks from the four stabilized gas compressors to the flare as specified in §60.5385(a).

13. **NESHAP Part 61 - Designated Source Standards**
40CFR§61.01-§61.359 [Not Applicable]

This rule does not apply because the facility is not a designated facility (or source) subject to any requirements of the National Emissions Standards for Hazardous Air Pollutants (NESHAP).

14. **NESHAP A (Part 63 (aka, MACT)) - General Provisions**
40CFR§63.1§63.16 [Not Applicable]

This rule does not apply because the facility is not subject to any requirements of the National Emissions Standards for Hazardous Air Pollutants (NESHAP) or associated Maximum Achievable Control Technology (MACT) requirements (§63.1(a)).

(Note: The Standby Emergency Generator Engine (GEN-1 (9E)) complies with NESHAP ZZZZ by compliance with NSPS JJJJ (§63.6590(a)(2)(iii)), no other requirements apply.)

15. **NESHAP HH, Oil and Natural Gas Production Facilities**
40CFR§63.760-§63.779 [Not Applicable]

This rule does not apply because the facility is an area source of HAPs and does not operate a triethylene glycol dehydration unit (§63.760(b)(2)).

16. **NESHAP HHH, Natural Gas Transmission and Storage Facilities**
40CFR§63.1270-§63.1289 [Not Applicable]

This rule does not apply because the facility is not a natural gas transmission or storage facility transporting or storing natural gas prior to local distribution (§63.1270(a)).

17. **NESHAP YYYY, Stationary Combustion Turbines**
40CFR§63.6080-§63.6175 [Not Applicable]

This rule does not apply because there is no stationary gas turbine at the facility (§63.6080).

18. **NESHAP ZZZZ, Stationary Reciprocating Internal Combustion Engines (RICE)**
40CFR§63.6580-§63.6675 [Applicable]

This rule does apply to the Standby Generator Engine (GEN-1 (9E)). However, because the engine is "new" or "reconstructed"; i.e., commenced construction or reconstruction on or after 06/12/06, the only requirement is compliance with 40CFR§60.4230-§60.4248 (NSPS JJJJ) for Spark Ignition Internal Combustion Engines (§63.6590(a)(2)(iii)).

19. **NESHAP DDDDD, Industrial, Commercial, and Institutional Boilers and Process Heaters – Major Sources**
40CFR§63.7480 – §63.7575 [Not Applicable]

This rule does not apply to the gas-fired heaters (H-01 (1E) thru H-07 (7E)) because the facility is not a major source of HAP (§63.7485).

20. **NESHAP JJJJJJ, Industrial, Commercial, and Institutional Boilers – Area Sources**
40CFR§63.11193 – §63.11237 [Not Applicable]

This rule does not apply because the gas-fired heaters (H-01 (1E) thru H-07 (7E)) do not meet the definition of "boiler" in §63.11237. Specifically, "boiler" is defined as an enclosed device using controlled flame combustion in which water is heated to recover thermal energy in the form of steam and/or hot water. Furthermore, waste heat boilers, process heaters, and autoclaves are excluded from the definition of "boiler".

21. **Chemical Accident Prevention Provisions (RMP)**
40CFR§68.1-§68.220 [Applicable]

This rule does apply because the facility stores more than a threshold quantity of regulated substance in a process (§68.115).

22. **Compliance Assurance Monitoring (CAM)**
40CFR§64.1-§64.10 [Not Applicable]

This rule does not apply because there are no pollutant-specific emission units subject to an emissions limitation or standard (e.g., NSPS, NESHAP, HAP, NSR, PSD, SIP), with pre-controlled emissions greater than Title V major source thresholds, that requires an add-on control device to achieve compliance.

23. **Mandatory Greenhouse Gases (GHG) Reporting**
40CFR§98.1-§98.9 [Potentially Applicable]

This rule potentially applies. The facility is not subject to a listed source category; however, the aggregate maximum heat input capacity of the stationary fuel combustion units is ≥ 30 MMBtu/hr and the facility has the potential to emit ≥ 25,000 metric ton/yr (27,558 tpy) of CO2e/yr from all stationary fuel combustion sources combined (§98.2(a)).

Records must be kept of actual CO2, CH4 and N2O emissions to determine the actual CO2e emissions. If such emissions exceed the 25,000 metric ton/yr threshold then an annual report must be submitted no later than March 31st of each calendar year thereafter.

C. Applicability of Source Aggregation

For New Source Review (NSR) and Title V permitting, the three-part regulatory criteria to determine whether emissions from two or more facilities should be aggregated and treated as a single source are whether the activities:

i) Belong to the same industrial grouping;
ii) Are located on one or more contiguous or adjacent properties and meets the common sense notion of a plant; and
iii) Are under control of the same person (or persons under common control).

i) Same Industrial Grouping

The subject facility will operate under SIC code 1321 (Natural Gas Liquids). The upstream gas production facilities and downstream NGL fractionation plant operate under the same SIC code.

ii) Contiguous or Adjacent and "Plant"

The determination of whether two or more facilities are "contiguous" or "adjacent" is made on a case-by-case basis. There are no known facilities operating within a quarter-mile of the subject gas plant.

iii) Common Control

Williams OVM operates under its parent company The Williams Companies, Inc. (Williams) and is the sole operator of the subject facility. The nearest "company" owned facilities are the OVM Caveney Compressor Station approximately 1.0 mi northeast and the OVM Taylor Compressor Station approximately 1.0 mi south-southeast.

Summary

The subject facility and the gas production wells (or other operations) should not be aggregated and treated as a single source of emissions because they are not contiguous or adjacent, and do not meet the commonsense definition of a plant.

D. Applicability of State Regulations

The following State regulations are potentially applicable to gas plants. Applicability to the facility has been determined as follows:

1. **Particulate Air Pollution from Combustion of Fuel**
45CSR2 [Applicable]

This rule does apply to the natural gas fired heaters (H-01 thru H-07); limiting opacity to 10% based on a six minute block average.

Because the maximum design heat input ≥ 10 MMBtu/hr these units (except H-02) are also subject to Sections 4 (emission standard), 5 (control of fugitive particulate matter), 6 (registration), 8 (testing, monitoring, recordkeeping, reporting) and 9 (startups, shutdowns, malfunctions.

2. **Prevent and Control of Objectionable Odors**
45CSR4 [Applicable]

This rule does apply and states that an objectionable odor is an odor that is deemed objectionable when in the opinion of a duly authorized representative of the Air Pollution Control Commission (Division of Air Quality), based upon their investigations and complaints, such odor is objectionable. No odors have been deemed objectionable.

3. **Control of Air Pollution from Combustion of Refuse**
45CSR6 [Applicable]

This rule does apply to the Process Flare (FL-1 (8E)). The flare is required to be smokeless except for periods not to exceed a total of 5 minutes during any 2 consecutive hours. The particulate matter emissions should be negligible and the flare will comply with the applicable emission standard. The facility will demonstrate compliance by maintaining records of the amount of waste gas consumed by the flare and the hours of operation. The facility will also monitor the flare pilot flame and record any malfunctions that may cause no flame to be present during facility operation.

4. **Prevent and Control Air Pollution – Sulfur Oxides**
45CSR10 [Applicable]

This rule does apply to the gas-fueled heaters w/ a Maximum Design Heat Input (MDHI) rating > 10 MMBtu/hr (H-01 (E1), and H-03 (E3) thru H-07 (E7)) (§45-10-10.1).

Requirements are specified in 45CSR10 Sections 3 (emission standard), 6 (registration), 7 (permits), and 8 (testing, monitoring, recordkeeping, reporting).

5. **Permits for Construction, Modification, Relocation and Operation**
45CSR13 [Applicable]

This rule does apply. Williams OVM has received a 45CSR13 Permit for the subject facility.

6. **Permits for Construction and Modification of Major Stationary Sources for the Prevention of Significant Deterioration**
45CSR14 [Not Applicable]

The rule does not apply because the facility is neither a new PSD major source of pollutants nor is the proposed modification a modification to an existing PSD major source.

7. **Standards of Performance for New Stationary Sources (40 CFR Part 60)**
45CSR16 [Applicable]

This rule does apply to this source by reference of §40CFR60 Subparts Dc and OOOO. Williams is subject to the recordkeeping, monitoring, and testing required of these Subparts.

8. **Permits for Construction and Modification (Non-Attainment)**
45CSR19 [Not Applicable]

This rule does not apply. The facility location is designated as either "Maintenance" or "Attainment/Unclassified" for all criteria pollutants, except for sulfur dioxide. The plant-wide potential-to-emit (PTE) sulfur dioxide is less than applicable thresholds.

9. **Regulation of Volatile Organic Compounds (VOC)**
45CSR21 [Not Applicable]

This rule does not apply because the facility is not located in Putnam County, Kanawha County, Cabell County, Wayne County, or Wood County

10. **Air Quality Management Fees Program**
45CSR22 [Applicable]

This rule does apply. It establishes a program to collect fees for certificates to operate and for permits to construct, modify or relocate sources of air pollution.

11. **Prevent and Control Emissions of Toxic Air Pollutants**
45CSR27 [Not Applicable]

This rule does not apply because equipment used in the production and distribution of petroleum products is exempt, provided that the product contains no more than 5% benzene by weight (§45-22-2.4).

12. **Air Pollution Emissions Banking and Trading**
45CSR28 [Not Applicable]
This rule does not apply. The facility does not choose to participate in the voluntarily statewide air pollutant emissions trading program.

13. **Emission Statements for VOC and NOX**
45CSR29 [Not Applicable]

This rule does not apply because the facility is not located in Putnam, Kanawha, Cabell, Wayne, Wood, or Greenbrier Counties (§45-29-1).

14. **Requirements for Operating Permits**
45CSR30 [Applicable]

This rule does apply. The facility is subject to Title V permit requirements because the potential to emit (PTE) nitrogen oxides (NOx), carbon monoxide (CO) and volatile organic compounds (VOC) is ≥ 100 tpy (WVDEP requires fugitive emissions to be *in*cluded at gas plants) as follows:

- **NOx: TVOP Major Source with Controlled PTE ≥ 100 tpy**
- **CO: TVOP Major Source with Controlled PTE ≥ 100 tpy**
- **VOC: TVOP Major Source with Controlled PTE ≥ 100 tpy**

- SO2: TVOP Natural Minor Source with Pre-Controlled PTE < 100 tpy
- PM10/2.5: TVOP Natural Minor Source with Pre-Controlled PTE < 100 tpy
- Each HAP: TVOP Synthetic Minor Source with Controlled PTE < 10 tpy
- Total HAPs: TVOP Synthetic Minor Source with Controlled PTE < 25 tpy

Furthermore, because the facility is an "anyway" Title V source, it is also subject to Title V permit requirements because the potential to emit (PTE) carbon dioxide equivalent (CO2e) is ≥ 100,000 tpy:

- **CO2e: TVOP Major Source with Controlled PTE ≥ 100,000 tpy**

15. Emission Standards for Hazardous Air Pollutants (HAP)
45CSR34 [Not Applicable]

This rule does not apply because the facility is not subject to any Subpart under 40CFR§61 (NESHAP) or 40CFR§63 (MACT)

(Note: The Standby Emergency Generator Engine (GEN-1 (8E)) complies with NESHAP ZZZZ by compliance with NSPS JJJJ (§63.6590(a)(2)(iii)), no other requirements apply.)

SUPPLEMENT 03

Emission Calculations

---

§45-30-4.3.c.8 - The application forms shall include calculations or test data on which the information is based.

SUMMARIES:

- Potential to Emit (PTE) – CRITERIA – CONTROLLED
- Potential to Emit (PTE) – HAZARDOUS AIR POLLUTANTS (HAP) – CONTROLLED
- Potential to Emit (PTE) – GREENHOUSE GASES (GHG) – CONTROLLED
- Potential to Emit (PTE) – PRE-CONTROLLED

UNIT SPECIFIC:

- TXP1 Heat Medium Heater (H-01 (1E))
- TXP1 Regeneration Gas Heater (H-02 (2E))
- TXP2 & TXP3 Regeneration Gas Heaters (H-03 and -04 (3E and 4E))
- De-Ethanizer Hot Oil Heaters (H-05 and -06 (5E and 6E))
- De-Ethanizer Regeneration Gas Heater (H-07 (7E))
- Process Flare (FL-1 (8E))
- Standby Generator Engine (500 hr/yr) (GEN-1 (9E))
- Slop Oil/Condensate Storage Tanks (TK-01 thru -04 (10E thru 13E))
- Slop Oil/Condensate Truck Load-Out (TL-1 (14E))
- Amine Process Unit Vent (V-01 (16E))
- Rod Packing Leaks – Reciprocating Compressors (RPC (17E))
- Dry Gas Seal Leaks – Centrifugal Compressors (DGS (18E))
- Piping and Equipment Fugitives (Gas & Light Liquid) (FUG-G and FUG-L (15E))

AP-42 and GHG EMISSION FACTORS

Williams Ohio Valley Midstream LLC

OAK GROVE GAS PLANT

Application for 45CSR30 Title V Operating Permit

Supplement 03 - Emission Calculations

Potential to Emit (PTE) – CRITERIA – CONTROLLED

Unit ID	Point ID	Description	Site Rating	NOX		CO		VOC		SO2		PM10/2.5	
				lb/hr	tpy	lb/hr	tpy	lb/hr	tpy	lb/hr	tpy	lb/hr	tpy
H-01	01E	TXP1 Heat Medium Heater	26.26 MMBtu/hr	2.57	11.28	2.16	9.47	0.15	0.64	0.02	0.07	0.20	0.86
H-02	02E	TXP1 Regeneration Gas Heater	9.40 MMBtu/hr	0.92	4.04	0.77	3.39	0.05	0.23	0.01	0.02	0.07	0.31
H-03	03E	TXP2 Regeneration Gas Heater	20.30 MMBtu/hr	0.73	3.20	0.81	3.56	0.39	1.69	0.01	0.05	0.26	1.16
H-04	04E	TXP3 Regeneration Gas Heater	20.30 MMBtu/hr	0.73	3.20	0.81	3.56	0.39	1.69	0.01	0.05	0.26	1.16
H-05	05E	DeC2 Hot Oil Heater	68.33 MMBtu/hr	2.46	10.77	2.53	11.07	0.38	1.67	0.04	0.18	0.51	2.23
H-06	06E	DeC2 Hot Oil Heater	68.33 MMBtu/hr	2.46	10.77	2.53	11.07	0.38	1.67	0.04	0.18	0.51	2.23
H-07	07E	DeC2 Regeneration Gas Heater	10.44 MMBtu/hr	1.02	4.48	0.86	3.77	0.06	0.25	0.01	0.03	0.08	0.34
FL-1	08E	Process Flare	4,624 MMBtu/hr	638.07	73.27	1,273.82	146.28	177.29	20.36	1.54	0.19	19.50	2.39
GEN-1	09E	Standby Generator (w/ Gas Engine)	224 bhp	0.99	0.25	1.98	0.49	0.54	0.13	1.3E-03	3.2E-04	0.04	0.01
TK-1	10E	Slop Oil/Condensate - Tank	400 bbl	—	—	—	—	1.08	4.74	—	—	—	—
TK-2	11E	Slop Oil/Condensate - Tank	400 bbl	—	—	—	—	1.08	4.74	—	—	—	—
TK-3	12E	Slop Oil/Condensate - Tank	400 bbl	—	—	—	—	1.08	4.74	—	—	—	—
TK-4	13E	Slop Oil/Condensate - Tank	400 bbl	—	—	—	—	1.08	4.74	—	—	—	—
TL-1	14E	Truck Load-Out - Slop Oil/Condensate	4,000,000 gal/yr	—	—	—	—	27.13	18.09	—	—	—	—
V-01	16E	Amine Process Unit Vent - Acid Gas	44,000 bbl/day	—	—	—	—	0.11	0.49	—	—	—	—
RPC	17E	Rod Packing - Electric Reciprocating Comp's	7 Recips	—	—	—	—	0.17	0.30	—	—	—	—
DGS	18E	Dry Gas Seals - Electric Centrifugal Comp's	9 Centrifugals	—	—	—	—	0.86	3.77	—	—	—	—
			SUBTOTAL - POINT SOURCE EMISSIONS:	**649.96**	**121.26**	**1,286.28**	**192.66**	**212.22**	**69.94**	**1.67**	**0.76**	**21.43**	**10.68**
			PSD THRESHOLD:		250 tpy		250 tpy		250 tpy		250 tpy		250 tpy
FUG-G	15E	Piping and Equipment Fugitives - Gas	—	—	—	—	—	3.72	16.30	—	—	—	—
FUG-L		Piping and Equipment Fugitives - Light Liquid	—	—	—	—	—	9.70	26.20	—	—	—	—
			SUBTOTAL - FUGITIVE EMISSIONS:	—	—	—	—	**13.43**	**42.50**	—	—	—	—
			GRAND TOTAL - PLANT-WIDE EMISSIONS:	**649.96**	**121.26**	**1,286.28**	**192.66**	**225.64**	**112.44**	**1.67**	**0.76**	**21.43**	**10.68**
			WV NSR THRESHOLD:	6 lb/hr *AND* 10 tpy		6 lb/hr *AND* 10 tpy		6 lb/hr *AND* 10 tpy		6 lb/hr *AND* 10 tpy		6 lb/hr *AND* 10 tpy	
			TVOP THRESHOLD:		100 tpy		100 tpy		100 tpy		100 tpy		100 tpy

Notes: 1 - Emissions are based on operation at 100% of rated load for 8,760 hr/yr; except.

a - The Standby Generator (w/ Gas Engine) (GEN-1 (08E)) is limited to 500 hr/yr, and

b - The Truck Load-Out - Slop Oil/Condensate (TL-1 (14E)) is intermittent and infrequent.

2 - VOC is volatile organic compounds, as defined by EPA, and includes HCHO (formaldehyde).

3 - PM10/2.5 is filterable and condensable particulate matter; including PM10 and PM2.5.

Potential to Emit (PTE) – HAZARDOUS AIR POLLUTANTS – CONTROLLED

Unit ID	Point ID	Benzene CAS: 71-43-2 MW: 78.11 lb/lb-mol		Ethylbenzene CAS: 121-69-16 MW: 106.17 lb/lb-mol		Formaldehyde CAS: 121-69-26 MW: 30.03 lb/lb-mol		n-Hexane CAS: 121-69-34 MW: 86.18 lb/lb-mol		Toluene CAS: 121-69-37 MW: 92.14 lb/lb-mol		2,2,4-TMP CAS: 121-69-94 MW: 114.23 lb/lb-mol		Xylenes CAS: 121-69-99 MW: 106.17 lb/lb-mol		Other HAP		Total HAP	
		lb/hr	tpy	lb/hr	tpy	lb/hr	tpy	lb/hr	tpy	lb/hr	tpy	lb/hr	tpy	lb/hr	tpy	lb/hr	tpy	lb/hr	tpy
H-01	01E	5.4E-05	2.4E-04	—	—	1.9E-03	0.01	0.05	0.20	8.8E-05	3.8E-04	—	—	—	—	4.9E-05	2.1E-04	0.05	0.21
H-02	02E	1.9E-05	8.5E-05	—	—	6.9E-04	3.0E-03	0.02	0.07	3.1E-05	1.4E-04	—	—	—	—	1.7E-05	7.7E-05	0.02	0.08
H-03	03E	4.2E-05	1.8E-04	—	—	1.5E-03	0.01	0.04	0.16	6.8E-05	3.0E-04	—	—	—	—	3.8E-05	1.7E-04	0.04	0.16
H-04	04E	4.2E-05	1.8E-04	—	—	1.5E-03	0.01	0.04	0.16	6.8E-05	3.0E-04	—	—	—	—	3.8E-05	1.7E-04	0.04	0.16
H-05	05E	1.4E-04	6.2E-04	—	—	0.01	0.02	0.12	0.53	2.3E-04	1.0E-03	—	—	—	—	1.3E-04	5.6E-04	0.13	0.55
H-06	06E	1.4E-04	6.2E-04	—	—	0.01	0.02	0.12	0.53	2.3E-04	1.0E-03	—	—	—	—	1.3E-04	5.6E-04	0.13	0.55
H-07	07E	2.1E-05	9.4E-05	—	—	7.7E-04	3.4E-03	0.02	0.08	3.5E-05	1.5E-04	—	—	—	—	1.9E-05	8.5E-05	0.02	0.08
FL-1	08E	4.49	0.52	6.09	0.70	0.34	0.04	5.48	0.63	5.30	0.61	6.55	0.75	6.11	0.70	8.6E-03	9.9E-04	34.38	3.95
GEN-1	09E	3.5E-03	8.7E-04	5.4E-05	1.4E-05	0.04	0.01	—	—	1.2E-03	3.1E-04	—	—	4.3E-04	1.1E-04	0.02	0.01	0.07	0.02
TK-1	10E	0.04	0.16	0.04	0.16	—	—	0.04	0.16	0.04	0.16	0.04	0.16	0.04	0.16	—	—	0.22	0.95
TK-2	11E	0.04	0.16	0.04	0.16	—	—	0.04	0.16	0.04	0.16	0.04	0.16	0.04	0.16	—	—	0.22	0.95
TK-3	12E	0.04	0.16	0.04	0.16	—	—	0.04	0.16	0.04	0.16	0.04	0.16	0.04	0.16	—	—	0.22	0.95
TK-4	13E	0.04	0.16	0.04	0.16	—	—	0.04	0.16	0.04	0.16	0.04	0.16	0.04	0.16	—	—	0.22	0.95
TL-1	14E	0.90	0.60	0.90	0.60	—	—	0.90	0.60	0.90	0.60	0.90	0.60	0.90	0.60	—	—	5.43	3.62
V-01	16E	—	—	—	—	—	—	—	—	—	—	—	—	—	—	—	—	—	—
RPC	17E	—	—	—	—	—	—	—	—	—	—	—	—	—	—	—	—	—	—
DGS	18E	1.9E-03	0.01	1.9E-03	0.01	—	—	1.9E-03	0.01	1.9E-03	0.01	1.9E-03	0.01	1.9E-03	0.01	—	—	0.01	0.05
SUBTOTAL POINT:		**5.54**	**1.76**	**7.14**	**1.94**	**0.40**	**0.12**	**6.93**	**3.60**	**6.35**	**1.86**	**7.60**	**2.00**	**7.16**	**1.95**	**0.03**	**0.01**	**41.16**	**13.23**
FUG-G	15E	0.01	0.04	0.01	0.04	—	—	0.01	0.04	0.01	0.04	0.01	0.04	0.01	0.04	—	—	0.05	0.24
FUG-L		0.01	0.06	0.01	0.06	—	—	0.01	0.06	0.01	0.06	0.01	0.06	0.01	0.06	—	—	0.08	0.36
SUBTOTAL FUG:		**0.02**	**0.10**	**0.02**	**0.10**	**0.00**	**0.00**	**0.02**	**0.10**	**0.02**	**0.10**	**0.02**	**0.10**	**0.02**	**0.10**	—	—	**0.14**	**0.60**
GRAND TOTAL:		**5.57**	**1.86**	**7.16**	**2.04**	**0.40**	**0.12**	**6.95**	**3.70**	**6.38**	**1.96**	**7.63**	**2.10**	**7.19**	**2.05**	**0.03**	**0.01**	**41.30**	**13.83**
NSR THRESHOLD:		**2 lb/hr *OR* 0.5 tpy**		**2 lb/hr *OR* 5 tpy**		**2 lb/hr *OR* 0.5 tpy**		**2 lb/hr *OR* 5 tpy**		**2 lb/hr *OR* 5 tpy**		**2 lb/hr *OR* 5 tpy**		**2 lb/hr *OR* 5 tpy**		**2 lb/hr *OR* 5 tpy**		**2 lb/hr *OR* 5 tpy**	
TVOP THRESHOLD:			**10 tpy**		**10 tpy**		**10 tpy**		**10 tpy**		**10 tpy**		**10 tpy**		**10 tpy**		**10 tpy**		**25 tpy**

Notes: 1 - Emissions are based on operation at 100% of capacity for 8,760 hr/yr; except:

a - The Standby Generator (w/ Gas Engine) (GEN-1 (08E)) is limited to 500 hr/yr, and

b - The Truck Load-Out - Slop Oil/Condensate (TL-1 (14E)) is intermittent and infrequent.

2 - HCHO is formaldehyde.

3 - 2,2,4-TMP is 2,2,4-trimethylpentane (i.e., i-octane).

4 - Other HAP includes acetaldehyde, acrolein, methanol, and traces of other HAP (e.g., 1,3-butadiene and methyl chloride).

Potential to Emit (PTE) – GREENHOUSE GASES (GHG) – CONTROLLED

Unit ID	Point ID	Description	Heat Input MMBtu/hr (HHV)	Hours of Operation hr/yr	kg/MMBtu: 53.06 GWP: 1 CO2 tpy	CO2e tpy	kg/MMBtu: 1.00E-03 GWP: 25 CH4 tpy	CO2e tpy	kg/MMBtu: 1.00E-04 GWP: 298 N2O tpy	CO2e tpy	TOTAL CO2e tpy
H-01	01E	TXP1 Heat Medium Heater	26.26	8,760	13,456	13,456	26	661	0.03	8	14,125
H-02	02E	TXP1 Regeneration Gas Heater	9.40	8,760	4,816	4,816	9	237	0.01	3	5,056
H-03	03E	TXP2 Regeneration Gas Heater	20.30	8,760	10,401	10,401	1	16	0.02	6	10,422
H-04	04E	TXP3 Regeneration Gas Heater	20.30	8,760	10,401	10,401	1	16	0.02	6	10,422
H-05	05E	DeC2 Hot Oil Heater	68.33	8,760	35,008	35,008	69	1,721	0.07	20	36,749
H-06	06E	DeC2 Hot Oil Heater	68.33	8,760	35,008	35,008	69	1,721	0.07	20	36,749
H-07	07E	DeC2 Regeneration Gas Heater	10.44	8,760	5,350	5,350	11	263	0.01	3	5,616
FL-1	08E	Process Flare	121.22	8,760	83,066	83,066	25	623	68.38	20,376	104,066
GEN-1	09E	Standby Generator (w/ Gas Engine)	2.19	500	76	76	0.13	3.15	1.2E-04	0.04	79
TK-1	10E	Slop Oil/Condensate - Tank	—	8,760	—	—	—	—	—	—	—
TK-2	11E	Slop Oil/Condensate - Tank	—	8,760	—	—	—	—	—	—	—
TK-3	12E	Slop Oil/Condensate - Tank	—	8,760	—	—	—	—	—	—	—
TK-4	13E	Slop Oil/Condensate - Tank	—	8,760	—	—	—	—	—	—	—
TL-1	14E	Truck Load-Out - Slop Oil/Condensate	—	—	—	—	—	—	—	—	—
V-01	16E	Amine Process Unit Vent - Acid Gas	—	8,760	20,732	20,732	0.7	19	—	—	20,751
RPC	17E	Rod Packing - Electric Reciprocating Comp's	—	8,760	16	16	58	1,438	—	—	1,454
DGS	18E	Dry Gas Seals - Electric Centrifugal Comp's	—	8,760	0.1	0.1	102	2,557	—	—	2,557
		SUBTOTAL - POINT SOURCE EMISSIONS:			218,331	218,331	371	9,273	68.6	20,441	248,045
FUG-G	15E	Piping and Equipment Fugitives - Gas	—	8,760	0.36	0.4	45	1,118	—	—	1,118
FUG-L		Piping and Equipment Fugitives - Light Liquid	—	8,760	—	—	—	—	—	—	—
		SUBTOTAL - FUGITIVE EMISSIONS:			—	—	45	1,118	—	—	1,118

TOTAL FACILITY-WIDE PTE (w/o FUG):	218,331		416		68.6		249,163
PSD Threshold: (	na	- OR -	na	- OR -	na	) - AND -	na
Title V Major Source Threshold:							100,000

Notes:
1 - Emissions are based on operation at 100% of rated load for 8,760 hr/yr; except.
a - The Standby Generator (w/ Gas Engine) (GEN-1 (08E)) is limited to 500 hr/yr, and
b - The Truck Load-Out - Slop Oil/Condensate (TL-1 (14E)) is intermittent and infrequent.
2 - Engine CO2 and CH4 emissions are based on vendor specifications.
3 - Fugitive CH4 emissions are based on EPA Fugitive Emission Factors for Oil and Gas Production Operations.
4 - All other GHG emissions are based on default values in 40CFR98, Subpart C, Table C-1.
5 - PSD Thresholds and Title V Major Source Thresholds are only applicable if other regulated air pollutants exceed the corresponding Thresholds.

Williams Ohio Valley Midstream LLC

OAK GROVE GAS PLANT

Application for 45CSR30 Title V Operating Permit

Supplement 03 - Emission Calculations

Potential to Emit (PTE) – PRE-CONTROLLED

Unit ID	Point ID	Description	NOX		CO		VOC		n-Hexane		TOTAL HAP		CO2E	
			lb/hr	tpy	lb/hr	tpy	lb/hr	tpy	lb/hr	tpy	lb/hr	tpy	lb/hr	tpy
H-01	01E	TXP1 Heat Medium Heater	2.57	11.28	2.16	9.47	0.15	0.64	2.57	11.28	0.05	0.21	3,225	14,125
H-02	02E	TXP1 Regeneration Gas Heater	0.92	4.04	0.77	0.77	0.05	0.23	0.92	4.04	0.02	0.08	1,154	5,056
H-03	03E	TXP2 Regeneration Gas Heater	0.73	3.20	0.81	3.56	0.39	1.69	0.73	3.20	0.04	0.16	2,380	10,422
H-04	04E	TXP3 Regeneration Gas Heater	0.73	3.20	0.81	3.56	0.39	1.69	0.73	3.20	0.04	0.16	2,380	10,422
H-05	05E	DeC2 Hot Oil Heater	2.46	10.77	2.53	11.07	0.38	1.67	2.46	10.77	0.13	0.55	8,390	36,749
H-06	06E	DeC2 Hot Oil Heater	2.46	10.77	2.53	11.07	0.38	1.67	2.46	10.77	0.13	0.55	8,390	36,749
H-07	07E	DeC2 Regeneration Gas Heater	1.02	4.48	0.86	3.77	0.06	0.25	1.02	4.48	0.02	0.08	1,282	5,616
FL-1	08E	Process Flare	638.07	73.27	1,273.82	146.28	17,728.56	2,035.80	638.07	73.27	3,402.89	390.76	542,638	62,312
GEN-1	09E	Standby Generator (w/ Gas Engine)	0.99	4.33	1.98	8.65	0.54	2.36	—	—	0.07	0.31	317	1,388
TK-1	10E	Slop Oil/Condensate - Tank	—	—	—	—	1.08	4.74	0.04	0.16	0.22	0.95	—	—
TK-2	11E	Slop Oil/Condensate - Tank	—	—	—	—	1.08	4.74	0.04	0.16	0.22	0.95	—	—
TK-3	12E	Slop Oil/Condensate - Tank	—	—	—	—	1.08	4.74	0.04	0.16	0.22	0.95	—	—
TK-4	13E	Slop Oil/Condensate - Tank	—	—	—	—	1.08	4.74	0.04	0.16	0.22	0.95	—	—
TL-1	14E	Truck Load-Out - Slop Oil/Condensate	—	—	—	—	—	18.09	—	0.60	—	3.62	—	—
V-01	16E	Amine Process Unit Vent - Acid Gas	—	—	—	—	0.11	0.49	—	—	—	—	4,738	20,751
RPC	17E	Rod Packing - Electric Reciprocating Comp's	—	—	—	—	0.17	0.30	2.4E-03	6.1E-04	0.01	3.7E-03	394	1,454
DGS	18E	Dry Gas Seals - Electric Centrifugal Comp's	—	—	—	—	0.86	3.77	1.9E-03	0.01	0.01	0.05	584	2,557
		TOTAL PRE-CONTROLLED POINT SOURCE EMISSIONS:	**649.96**	**125.34**	**1,286.28**	**198.20**	**17,736.36**	**2,087.61**	**649.12**	**122.26**	**3,404.27**	**400.34**	**575,870**	**207,600**
FUG-G	15E	Piping and Equipment Fugitives - Gas	—	—	—	—	11.25	49.28	0.03	0.12	0.17	0.72	772	3,380
FUG-L		Piping and Equipment Fugitives - Light Liquid	—	—	—	—	17.33	75.90	0.04	0.18	0.24	1.05	—	—
		TOTAL PRE-CONTROLLED FUGITIVE EMISSIONS:	**—**	**—**	**—**	**—**	**28.58**	**125.17**	**0.07**	**0.30**	**0.41**	**1.78**	**772**	**3,380**
		TOTAL PRE-CONTROLLED EMISSIONS:	**649.96**	**125.34**	**1286.28**	**198.20**	**17,764.94**	**2,212.78**	**649.19**	**122.56**	**3404.67**	**402.11**	**576,642**	**210,979**

Notes: 1 - Emissions are based on operation at 100% of rated load for 8,760 hr/yr.

2 - VOC is volatile organic compounds, as defined by EPA, and includes HCHO (formaldehyde).

3 - PM10/2.5 is filterable and condensable particulate matter; including PM10 and PM2.5.

4 - HCHO is formaldehyde; Total HAP includes HCHO, n-hexane, BTEX (benzene, toluene, ethylbenzene, xylene), 2,2,4-TMP (i-octane), acetaldehyde, acrolein, and methanol.

TXP1 Heat Medium Heater Emissions

Unit ID	Description	Reference	Pollutant	Emission Factor		Pre-Controlled Emissions		Control Efficiency	Controlled Emissions	
				lb/MMscf	lb/MMBtu	lb/hr	tpy	%	lb/hr	tpy
H-01 (1E)	TXP1 Heat Medium Heater	EPA AP-42 Table 1.4-1	NOX	100.00	0.10	2.57	11.28	—	2.57	11.28
		EPA AP-42 Table 1.4-1	CO	84.00	0.08	2.16	9.47	—	2.16	9.47
		EPA AP-42 Table 1.4-2	VOC	5.68	5.6E-03	0.15	0.64	—	0.15	0.64
		EPA AP-42 Table 1.4-2	SO2	0.60	5.9E-04	0.02	0.07	—	0.02	0.07
	23.69 MMBtu/hr (LHV)	EPA AP-42 Table 1.4-2	PM10/2.5	7.60	0.01	0.20	0.86	—	0.20	0.86
	26.26 MMBtu/hr (HHV)	EPA AP-42 Table 1.4-3	Benzene	2.1E-03	2.1E-06	5.4E-05	2.4E-04	—	5.4E-05	2.4E-04
		EPA AP-42 Table 1.4-3	Ethylbenzene	—	—	—	—	—	—	—
	8,760 hr/yr	EPA AP-42 Table 1.4-3	HCHO	0.08	7.4E-05	1.9E-03	0.01	—	1.9E-03	0.01
		EPA AP-42 Table 1.4-3	n-Hexane	1.80	1.8E-03	0.05	0.20	—	0.05	0.20
	920 Btu/scf (LHV)	EPA AP-42 Table 1.4-3	Toluene	3.4E-03	3.3E-06	8.8E-05	3.8E-04	—	8.8E-05	3.8E-04
	1,020 Btu/scf (HHV)	EPA AP-42 Table 1.4-3	2,2,4-TMP	—	—	—	—	—	—	—
		EPA AP-42 Table 1.4-3	Xylenes	—	—	—	—	—	—	—
	207,509 MMBtu/yr (LHV)	EPA AP-42 Table 1.4-3	Other HAP	1.9E-03	1.9E-06	4.9E-05	2.1E-04	—	4.9E-05	2.1E-04
	230,064 MMBtu/yr (HHV)	SUM	Tot HAP	1.88	1.8E-03	0.05	0.21	—	0.05	0.21
		40CFR98 - Table C-1	CO2	119,317	116.98	3,072	13,456	—	3,072	13,456
	25,748 scf/hr	40CFR98 - Table C-2	CH4	234.60	0.23	6.04	26.46	—	6.04	26.46
	225.55 MMscf/yr	40CFR98 - Table C-2	N2O	0.22	2.2E-04	5.8E-03	0.03	—	5.8E-03	0.03
		40CFR98 - Table A-1	CO2e	125,249	122.79	3,225	14,125	—	3,225	14,125

Notes:

1 - The fuel heating value will vary, 920 Btu/scf (LHV) is at the low end of the range and results in a high (conservative) fuel consumption estimate.

2 - PM10/2.5 is filterable and condensable particulate matter; including PM10 and PM2.5.

3 - HCHO is formaldehyde; Total HAP includes, but not limited to, HCHO, n-hexane, BTEX (benzene, toluene, ethylbenzene, xylenes), 2,2,4-TMP (iso-octane), acetaldehyde, acrolein, and methanol (MeOH).

4 - Emission factors in AP-42 are NOT EPA-recommended emission limits. Because emission factors essentially represent an average of a range of emission rates, a permit limit using an AP-42 emission factor would result in half of the sources being in noncompliance.

TXP1 Regen Gas Heater Emissions

Unit ID	Description	Reference	Pollutant	Emission Factor		Pre-Controlled Emissions		Control Efficiency	Controlled Emissions	
				lb/MMscf	lb/MMBtu	lb/hr	tpy	%	lb/hr	tpy
H-02 (2E)	TXP1 Regen Gas Heater	EPA AP-42 Table 1.4-1	NOX	100.00	0.10	0.92	4.04	—	0.92	4.04
		EPA AP-42 Table 1.4-1	CO	84.00	0.08	0.77	3.39	—	0.77	3.39
		EPA AP-42 Table 1.4-2	VOC	5.68	0.01	0.05	0.23	—	0.05	0.23
		EPA AP-42 Table 1.4-2	SO2	0.60	5.9E-04	0.01	0.02	—	0.01	0.02
	8.48 MMBtu/hr (LHV)	EPA AP-42 Table 1.4-2	PM10/2.5	7.60	0.01	0.07	0.31	—	0.07	0.31
	9.40 MMBtu/hr (HHV)	EPA AP-42 Table 1.4-3	Benzene	2.1E-03	2.1E-06	1.9E-05	8.5E-05	—	1.9E-05	8.5E-05
		EPA AP-42 Table 1.4-3	Ethylbenzene	—	—	—	—	—	—	—
	8,760 hr/yr	EPA AP-42 Table 1.4-3	HCHO	0.08	7.4E-05	6.9E-04	0.00	—	6.9E-04	0.00
		EPA AP-42 Table 1.4-3	n-Hexane	1.80	1.8E-03	0.02	0.07	—	0.02	0.07
	920 Btu/scf (LHV)	EPA AP-42 Table 1.4-3	Toluene	3.4E-03	3.3E-06	3.1E-05	1.4E-04	—	3.1E-05	1.4E-04
	1,020 Btu/scf (HHV)	EPA AP-42 Table 1.4-3	2,2,4-TMP	—	—	—	—	—	—	—
		EPA AP-42 Table 1.4-3	Xylenes	—	—	—	—	—	—	—
	74,271 MMBtu/yr (LHV)	EPA AP-42 Table 1.4-3	Other HAP	1.9E-03	1.9E-06	1.7E-05	7.7E-05	—	1.7E-05	7.7E-05
	82,344 MMBtu/yr (HHV)	SUM	Tot HAP	1.88	1.8E-03	0.02	0.08	—	0.02	0.08
		40CFR98 - Table C-1	CO2	119,317	116.98	1,100	4,816	—	1,100	4,816
	9,216 scf/hr	40CFR98 - Table C-2	CH4	234.60	0.23	2.16	9.47	—	2.16	9.47
	80.73 MMscf/yr	40CFR98 - Table C-2	N2O	0.22	2.2E-04	2.1E-03	0.01	—	2.1E-03	0.01
		40CFR98 - Table A-1	CO2e	125,249	122.79	1,154	5,056	—	1,154	5,056

Notes:

1 - The fuel heating value will vary, 920 Btu/scf (LHV) is at the low end of the range and results in a high (conservative) fuel consumption estimate.

2 - PM10/2.5 is filterable and condensable particulate matter; including PM10 and PM2.5.

3 - HCHO is formaldehyde; Total HAP includes, but not limited to, HCHO, n-hexane, BTEX (benzene, toluene, ethylbenzene, xylenes), 2,2,4-TMP (iso-octane), acetaldehyde, acrolein, and methanol (MeOH).

4 - Emission factors in AP-42 are NOT EPA-recommended emission limits. Because emission factors essentially represent an average of a range of emission rates, a permit limit using an AP-42 emission factor would result in half of the sources being in noncompliance.

TXP2 & TXP3 Regen Gas Heater Emissions

Unit ID	Description	Reference	Pollutant	Emission Factor		Pre-Controlled Emissions		Control Efficiency	Controlled Emissions	
				lb/MMscf	lb/MMBtu	lb/hr	tpy	%	lb/hr	tpy
H-03 (3E) and H-04 (4E) (each)	TXP2 & TXP3 Regen Gas Heaters (each)	Vendor Data	NOX	36.72	0.036	0.73	3.20	—	0.73	3.20
		Vendor Data	CO	40.80	0.040	0.81	3.56	—	0.81	3.56
		Vendor Data	VOC	19.38	0.019	0.39	1.69	—	0.39	1.69
		EPA AP-42 Table 1.4-2	SO2	0.60	5.9E-04	0.01	0.05	—	0.01	0.05
	18.31 MMBtu/hr (LHV)	Vendor Data	PM10/2.5	13.26	0.013	0.26	1.16	—	0.26	1.16
	20.30 MMBtu/hr (HHV)	EPA AP-42 Table 1.4-3	Benzene	2.1E-03	2.1E-06	4.2E-05	1.8E-04	—	4.2E-05	1.8E-04
		EPA AP-42 Table 1.4-3	Ethylbenzene	—	—	—	—	—	—	—
	8,760 hr/yr	EPA AP-42 Table 1.4-3	HCHO	0.08	7.4E-05	1.5E-03	0.01	—	1.5E-03	0.01
		EPA AP-42 Table 1.4-3	n-Hexane	1.80	1.8E-03	0.04	0.16	—	0.04	0.16
	920 Btu/scf (LHV)	EPA AP-42 Table 1.4-3	Toluene	3.4E-03	3.3E-06	6.8E-05	3.0E-04	—	6.8E-05	3.0E-04
	1,020 Btu/scf (HHV)	EPA AP-42 Table 1.4-3	2,2,4-TMP	—	—	—	—	—	—	—
		EPA AP-42 Table 1.4-3	Xylenes	—	—	—	—	—	—	—
	160,394 MMBtu/yr (LHV)	EPA AP-42 Table 1.4-3	Other HAP	1.9E-03	1.9E-06	3.8E-05	1.7E-04	—	3.8E-05	1.7E-04
	177,828 MMBtu/yr (HHV)	SUM	Tot HAP	1.88	1.8E-03	0.04	0.16	—	0.04	0.16
		40CFR98 - Table C-1	CO2	119,317	116.98	2,375	10,401	—	2,375	10,401
	19,902 scf/hr	Vendor Data	CH4	7.14	0.007	0.14	0.62	—	0.14	0.62
	174.34 MMscf/yr	40CFR98 - Table C-2	N2O	0.22	2.2E-04	4.5E-03	0.02	—	4.5E-03	0.02
		40CFR98 - Table A-1	CO2e	119,562	117.22	2,380	10,422	—	2,380	10,422

Notes:

1 - The fuel heating value will vary, 920 Btu/scf (LHV) is at the low end of the range and results in a high (conservative) fuel consumption estimate.

2 - PM10/2.5 is filterable and condensable particulate matter; including PM10 and PM2.5.

3 - HCHO is formaldehyde; Total HAP includes, but not limited to, HCHO, n-hexane, BTEX (benzene, toluene, ethylbenzene, xylenes), 2,2,4-TMP (iso-octane), acetaldehyde, acrolein, and methanol (MeOH).

4 - Emission factors in AP-42 are NOT EPA-recommended emission limits. Because emission factors essentially represent an average of a range of emission rates, a permit limit using an AP-42 emission factor would result in half of the sources being in noncompliance.

ZEECO BURNER DATA SHEETS

BASIS OF EMISSIONS INFORMATION

				Rev.
Furnace Temperature (°F)	1,500			
Excess Combustion Air (%)	15% Gas			
Combustion Air Temperature (°F)	100			
Relative Humidity (%)	70%			
Heat Release for Guarantee (MM Btu/hr)	18.200	to	9.100 LHV	1

EMISSIONS INFORMATION	PREDICTED (ppmv)	PREDICTED (#/MMBtu)	GUARANTEED (ppmv)	GUARANTEED (#/MMBtu)
NOx Design	9	0.011	30	0.036
NOx Rich Rjctn	9	0.011	30	0.036
CO - Gas	0	0.000	50	0.040
UHC - Gas	1	0.001	15	0.007
Particulate - Gas	2	0.002	15	0.013
VOC - Gas	0	0.000	15	0.019

De-Ethanizer Hot Oil Heater Emissions

Unit ID	Description	Reference	Pollutant	Emission Factor lb/MMscf	Emission Factor lb/MMBtu	Pre-Controlled Emissions lb/hr	Pre-Controlled Emissions tpy	Control Efficiency %	Controlled Emissions lb/hr	Controlled Emissions tpy
H-05 (5E) and H-06 (6E) (each)	De-Ethanizer Hot Oil Heaters (each)	Vendor Data	NOX	36.72	0.036	2.46	10.77	—	2.46	10.77
		Vendor Data	CO	37.74	0.037	2.53	11.07	—	2.53	11.07
		EPA AP-42 Table 1.4-2	VOC	5.68	5.6E-03	0.38	1.67	—	0.38	1.67
		EPA AP-42 Table 1.4-2	SO2	0.60	5.9E-04	0.04	0.18	—	0.04	0.18
	61.63 MMBtu/hr (LHV)	EPA AP-42 Table 1.4-2	PM10/2.5	7.60	0.01	0.51	2.23	—	0.51	2.23
	68.33 MMBtu/hr (HHV)	EPA AP-42 Table 1.4-3	Benzene	2.1E-03	2.1E-06	1.4E-04	6.2E-04	—	1.4E-04	6.2E-04
		EPA AP-42 Table 1.4-3	Ethylbenzene	—	—	—	—	—	—	—
	8,760 hr/yr	EPA AP-42 Table 1.4-3	HCHO	0.08	7.4E-05	5.0E-03	0.02	—	5.0E-03	0.02
		EPA AP-42 Table 1.4-3	n-Hexane	1.80	1.8E-03	0.12	0.53	—	0.12	0.53
	920 Btu/scf (LHV)	EPA AP-42 Table 1.4-3	Toluene	3.4E-03	3.3E-06	2.3E-04	1.0E-03	—	2.3E-04	1.0E-03
	1,020 Btu/scf (HHV)	EPA AP-42 Table 1.4-3	2,2,4-TMP	—	—	—	—	—	—	—
		EPA AP-42 Table 1.4-3	Xylenes	—	—	—	—	—	—	—
	539,864 MMBtu/yr (LHV)	EPA AP-42 Table 1.4-3	Other HAP	1.9E-03	1.9E-06	1.3E-04	5.6E-04	—	1.3E-04	5.6E-04
	598,545 MMBtu/yr (HHV)	SUM	Tot HAP	1.88	1.8E-03	0.13	0.55	—	0.13	0.55
		40CFR98 - Table C-1	CO2	119,317	116.98	7,993	35,008	—	7,993	35,008
	66,987 scf/hr	40CFR98 - Table C-2	CH4	234.60	0.23	15.72	68.83	—	15.72	68.83
	586.81 MMscf/yr	40CFR98 - Table C-2	N2O	0.22	2.2E-04	1.5E-02	0.07	—	1.5E-02	0.07
		40CFR98 - Table A-1	CO2e	125,249	122.79	8,390	36,749	—	8,390	36,749

Notes:

1 - The fuel heating value will vary, 920 Btu/scf (LHV) is at the low end of the range and results in a high (conservative) fuel consumption estimate.

2 - PM10/2.5 is filterable and condensable particulate matter; including PM10 and PM2.5.

3 - HCHO is formaldehyde; Total HAP includes, but not limited to, HCHO, n-hexane, BTEX (benzene, toluene, ethylbenzene, xylenes), 2,2,4-TMP (iso-octane), acetaldehyde, acrolein, and methanol (MeOH).

4 - Emission factors in AP-42 are NOT EPA-recommended emission limits. Because emission factors essentially represent an average of a range of emission rates, a permit limit using an AP-42 emission factor would result in half of the sources being in noncompliance.

FABER BURNER COMPANY
#13011
BURNER DATA
Page 3 of 4

F. **Gas Pilot Data:**
Natural Gas at 1000 BTU/SCF & 0.6 S.G., 630 SCFH required at 1 PSIG at the pilot.

G. **Turndown Data:**
10:1 on Natural Gas
4:1 on Natural Gas (with emissions guarantee)

H. **Excess Air Design Data:**
15% on Natural Gas @ MCR

I. EMISSION GUARANTEES

Not to Exceed:	Natural Gas	
	Lbs/MMBTU	PPM
NOx	0.036	30
CO	0.037	50

Parts Per Million (PPM) @ 3% O2 Dry

DeC2 Regeneration Gas Heater Emissions

Unit ID	Description	Reference	Pollutant	Emission Factor lb/MMscf	Emission Factor lb/MMBtu	Pre-Controlled Emissions lb/hr	Pre-Controlled Emissions tpy	Control Efficiency %	Controlled Emissions lb/hr	Controlled Emissions tpy
H-07 (7E)	DeC2 Regen Gas Heater	EPA AP-42 Table 1.4-1	NOX	100.00	0.10	1.02	4.48	—	1.02	4.48
		EPA AP-42 Table 1.4-1	CO	84.00	0.08	0.86	3.77	—	0.86	3.77
		EPA AP-42 Table 1.4-2	VOC	5.68	5.6E-03	0.06	0.25	—	0.06	0.25
		EPA AP-42 Table 1.4-2	SO2	0.60	5.9E-04	0.01	0.03	—	0.01	0.03
	9.42 MMBtu/hr (LHV)	EPA AP-42 Table 1.4-2	PM10/2.5	7.60	0.01	0.08	0.34	—	0.08	0.34
	10.44 MMBtu/hr (HHV)	EPA AP-42 Table 1.4-3	Benzene	2.1E-03	2.1E-06	2.1E-05	9.4E-05	—	2.1E-05	9.4E-05
		EPA AP-42 Table 1.4-3	Ethylbenzene	—	—	—	—	—	—	—
	8,760 hr/yr	EPA AP-42 Table 1.4-3	HCHO	0.08	7.4E-05	7.7E-04	3.4E-03	—	7.7E-04	3.4E-03
		EPA AP-42 Table 1.4-3	n-Hexane	1.80	1.8E-03	0.02	0.08	—	0.02	0.08
	920 Btu/scf (LHV)	EPA AP-42 Table 1.4-3	Toluene	3.4E-03	3.3E-06	3.5E-05	1.5E-04	—	3.5E-05	1.5E-04
	1,020 Btu/scf (HHV)	EPA AP-42 Table 1.4-3	2,2,4-TMP	—	—	—	—	—	—	—
		EPA AP-42 Table 1.4-3	Xylenes	—	—	—	—	—	—	—
	82,504 MMBtu/yr (LHV)	EPA AP-42 Table 1.4-3	Other HAP	1.9E-03	1.9E-06	1.9E-05	8.5E-05	—	1.9E-05	8.5E-05
	91,472 MMBtu/yr (HHV)	SUM	Tot HAP	1.88	1.8E-03	0.02	0.08	—	0.02	0.08
		40CFR98 - Table C-1	CO2	119,317	116.98	1,221	5,350	—	1,221	5,350
	10,237 scf/hr	40CFR98 - Table C-2	CH4	234.60	0.23	2.40	10.52	—	2.40	10.52
	89.68 MMscf/yr	40CFR98 - Table C-2	N2O	0.22	2.2E-04	2.3E-03	0.01	—	2.3E-03	0.01
		40CFR98 - Table A-1	CO2e	125,249	122.79	1,282	5,616	—	1,282	5,616

Notes:

1 - The fuel heating value will vary, 920 Btu/scf (LHV) is at the low end of the range and results in a high (conservative) fuel consumption estimate.

2 - PM10/2.5 is filterable and condensable particulate matter; including PM10 and PM2.5.

3 - HCHO is formaldehyde; Total HAP includes, but not limited to, HCHO, n-hexane, BTEX (benzene, toluene, ethylbenzene, xylenes), 2,2,4-TMP (iso-octane), acetaldehyde, acrolein, and methanol (MeOH).

4 - Emission factors in AP-42 are NOT EPA-recommended emission limits. Because emission factors essentially represent an average of a range of emission rates, a permit limit using an AP-42 emission factor would result in half of the sources being in noncompliance.

Process Flare Emissions

Unit ID	Description	Reference	Pollutant	Emission Factor lb/MMscf	Emission Factor lb/MMBtu	Pre-Controlled Emissions lb/hr	Pre-Controlled Emissions tpy	Control Efficiency %	Controlled Emissions lb/hr	Controlled Emissions tpy
FL-1 (8E)	**Process Flare-1**	TCEQ 2010 Flare Study	NOX	Varies	0.1380	—	—	—	638.07	73.27
		TCEQ 2010 Flare Study	CO	Varies	0.2755	—	—	—	1,273.82	146.28
	Peak (Hourly)	Mass Balance	VOC	6,461	3.83	17,728.56	2,035.80	99%	177.29	20.36
	208,000 lb/hr (Peak)	EPA AP-42 Table 1.4-2	SO2	0.60	3.3E-04	—	—	—	1.54	0.19
	2,566,068 scf/hr (Peak)	EPA AP-42 Table 1.4-2	PM10/2.5	7.60	4.2E-03	—	—	—	19.50	2.39
	4,624 MMBtu/hr (HHV)	Mass Balance	Benzene	163.59	0.10	448.89	51.55	99%	4.49	0.52
	1,802 Btu/scf (HHV)	Mass Balance	Ethylbenzene	221.99	0.13	609.15	69.95	99%	6.09	0.70
		EPA AP-42 Table 1.4-3	HCHO	0.12	7.4E-05	—	—	—	0.34	0.04
	8,760 hr/yr	Mass Balance	n-Hexane	199.79	0.12	548.24	62.95	99%	5.48	0.63
		Mass Balance	Toluene	193.17	0.11	530.06	60.87	99%	5.30	0.61
	Average (Annual)	Mass Balance	2,2,4-TMP	238.86	1.4E-01	655.42	75.26	99%	6.55	0.75
	71,940 scf/hr (Average)	Mass Balance	Xylenes	222.72	0.13	611.14	70.18	99%	6.11	0.70
	121.22 MMBtu/hr (HHV)	EPA AP-42 Table 1.4-3	Other HAP	3.1E-03	1.9E-06	—	—	—	8.6E-03	9.9E-04
	1,061,889 MMBtu/yr	Sum	Tot HAP	1,240.25	0.74	3,402.89	390.76	99%	34.38	3.95
	630.19 MMscf/yr	40CFR98 Table C-1	CO2	263,621	156.45	—	—	—	723,375	83,066
	1,685.02 Btu/scf (HHV)	Mass Balance	CH4	7,910	4.69	21,706	2,492.48	99%	217.06	25
		40CFR98 - Table C-2	N2O	217.00	0.13	—	—	—	595	68
		40CFR98 - Table A-1	CO2e	526,042	312.19	542,638	62,312	—	906,247	104,066

Notes:

1 - Flare peak (hourly) capacity is based on an emergency ethane release:
Flow rate = 208,000 lb/hr, MW = 30.76 lb/lb-mol, and heating value = 1,802 Btu/scf (HHV).

2 - Heat Input (See 'Att H - Waste Gas Summary' and 'Att H - Waste Gas Btu Analysis' spreadsheets):

Component	Waste Gas (to Flare) Mol% (Vol%)	MMscf/yr	scf/hr (ave)	Btu/scf (HHV)	lb/MMscf
Nitrogen	0.1%	0.47	54	—	61
CO2	0.1%	0.52	60	—	96
Methane	18.7%	117.92	13,461	189	7,910
Ethane	76.8%	484.17	55,271	1,360	60,879
VOC	4.3%	27.11	3,095	136	6,461
Benzene	0.08%	0.50	57	3.0	164
E-Benzene	0.08%	0.50	57	4.1	222
n-Hexane	0.09%	0.55	63	4.2	200
Toluene	0.08%	0.50	57	3.6	193
2,2,4-TMP	0.08%	0.50	57	4.9	239
Xylenes	0.08%	0.50	57	4.1	223
TOTAL	**100.0%**	**630.19**	**71,940**	**1,685**	**75,407**

3 - CO2e Emission Factor (See 'Att H - Waste Gas Summary'):

40CFR98	kg/MMBtu	lb/MMBtu	Wgt%	lb/MMBtu
Methane	53.06	116.98	12.6%	14.74
Ethane	59.60	131.40	96.9%	127.38
VOC	62.87	138.60	10.3%	14.34
Conservative Estimate:			**119.9%**	**156.45**

4 - Waste Gas volumes to the flare are conservatively estimated as as follows:

Stream Description	Estimated Gas Volume to Process Flare (FL-1 (8E))	scf/hr (ave)	MMscf/yr
Inlet Gas	TXP Blowdowns	2,146	18.80
	TXP Start-Up and Dry-out	2,383	20.88
	Balance of Plant Volumes	197	1.73
	Filters Change-Out	43	0.38
	Compressor Maintenance	2,493	21.84
	Amine Unit - Flash Gas	519	4.54
	Gas Pig Trap Blowdown	920	8.06
	Compressor Dry Gas Seals	56	0.49
	Other/Misc/Contingency (20%)	1,752	15.34
	SubTotal:	**10,509**	**92.06**
Ethane	Ethane	57,078	500.00
	SubTotal:	**57,078**	**500.00**
NGL	Liquid Pig Trap Blowdown	6	0.06
	TXP Tanks Liquid Dry-Out	100	0.88
	Pump Maintenance	22	0.19
	SubTotal:	**128**	**1.12**
Residue Gas	Purge Gas	4,000	35.04
	Pilot Gas	225	1.971
	SubTotal:	**4,225**	**37.01**
	Grand-Total:	**71,940**	**630.19**
		5,425 lb/hr	

Standby Generator Engine Emissions

Unit ID (Point ID)	Description	Reference	Pollutant	Pre-Controlled Emissions g/bhp-hr	lb/MMBtu	lb/hr	tpy	Control Efficiency %	Controlled Emissions g/bhp-hr	lb/MMBtu	lb/hr	tpy
GEN-1 (9E)	Generator Engine (Propane) (EPA Certified)	NSPS JJJJ	NOx	2.00	0.45	0.99	4.33	na	2.00	0.45	0.99	0.25
		NSPS JJJJ	CO	4.00	0.90	1.98	8.65	na	4.00	0.90	1.98	0.49
		NMHC+CH4	THC	2.22	0.50	1.10	4.81	na	2.22	0.50	1.10	0.27
	Olympian G150LG2	NMNEHC*120%	NMHC	1.20	0.27	0.59	2.60	na	1.20	0.27	0.59	0.15
	224 bhp	NSPS JJJJ	NMNEHC	1.00	0.23	0.49	2.16	na	1.00	0.23	0.49	0.12
	150 ekW	NMNEHC + HCHO	VOC	1.09	0.25	0.54	2.36	na	1.09	0.25	0.54	0.13
	Manufactured ≥ 07/01/10	AP-42 Table 3.2-3	SO2	2.6E-03	5.88E-04	1.3E-03	0.01	na	2.6E-03	5.9E-04	1.3E-03	3.2E-04
	NSPS JJJJ Affected	AP-42 Table 3.2-3	PM10/2.5	0.09	0.02	0.04	0.19	na	0.09	0.02	0.04	0.01
		AP-42 Table 3.2-3	Benzene	0.01	1.58E-03	3.5E-03	0.02	na	0.01	1.6E-03	3.5E-03	8.7E-04
	500 hr/yr	AP-42 Table 3.2-3	Ethylbenzene	1.1E-04	2.48E-05	5.4E-05	2.4E-04	na	1.1E-04	2.5E-05	5.4E-05	1.4E-05
		AP-42 Table 3.2-3	HCHO	0.09	0.02	0.04	0.20	na	0.09	0.02	0.04	0.01
	8,815 Btu/bhp-hr (LHV)	AP-42 Table 3.2-3	n-Hexane	—	—	—	—	na	—	—	—	—
	9,794 Btu/bhp-hr (HHV)	AP-42 Table 3.2-3	Toluene	2.5E-03	5.58E-04	1.2E-03	0.01	na	2.5E-03	5.6E-04	1.2E-03	3.1E-04
		AP-42 Table 3.2-3	2,2,4-TMP	—	—	—	—	na	—	—	—	—
	2.19 MMBtu/hr (HHV)	AP-42 Table 3.2-3	Xylenes	8.7E-04	1.95E-04	4.3E-04	1.9E-03	na	8.7E-04	2.0E-04	4.3E-04	1.1E-04
		AP-42 Table 3.2-3	Other HAP	0.04	0.01	0.02	0.09	na	0.04	0.01	0.02	0.01
	878 scf/hr	SUM	Total HAP	0.14	0.03	0.07	0.31	na	0.14	0.03	0.07	0.02
	0.44 MMscf/yr	40CFR98 - Table C-1	CO2	616	138.60	304	1,332	na	616	138.60	304	76
		40CFR98 - Table C-1	CH4	1.02	0.23	0.50	2.21	na	1.02	0.23	0.50	0.13
	2,250 Btu/scf (LHV)	40CFR98 - Table C-2	N2O	9.8E-04	2.2E-04	4.8E-04	2.1E-03	na	9.8E-04	2.2E-04	4.8E-04	1.2E-04
	2,500 Btu/scf (HHV)	40CFR98 - Table A-1	CO2e	642	144	317	1,388	na	642	144	317	79

Notes:
1 - The emissions are based on operation at 100% of rated load.
2 - Pre-Controlled emissions assume 8,760 hr/hr and Controlled emissions are based on 500 hr/yr.

Table 1 to Subpart JJJJ of Part 60—NO_X, CO, and VOC Emission Standards for Stationary Non-Emergency SI Engines >100 HP (Except Gasoline and Rich Burn LPG), Stationary SI Landfill/Digester Gas Engines, and Stationary Emergency Engines >25 HP

Engine type and fuel	Maximum engine power	Manufacture date	Emission standards[a] g/HP-hr NO_X	CO	VOC[d]	ppmvd at 15% O_2 NO_X	CO	VOC[d]
Non Emergency SI Natural Gas[b] and Non Emergency SI Lean Burn LPG[b]	100≤HP<500	7/1/2008	2.0	4.0	1.0	160	540	86
		1/1/2011	1.0	2.0	0.7	82	270	60
Non-Emergency SI Lean Burn Natural Gas and LPG	500≤HP<1,350	1/1/2008	2.0	4.0	1.0	160	540	86
		7/1/2010	1.0	2.0	0.7	82	270	60
Non-Emergency SI Natural Gas and Non-Emergency SI Lean Burn LPG (except lean burn 500≤HP<1,350)	HP≥500	7/1/2007	2.0	4.0	1.0	160	540	86
	HP≥500	7/1/2010	1.0	2.0	0.7	82	270	60
Landfill/Digester Gas (except lean burn 500≤HP<1,350)	HP<500	7/1/2008	3.0	5.0	1.0	220	610	80
		1/1/2011	2.0	5.0	1.0	150	610	80
	HP≥500	7/1/2007	3.0	5.0	1.0	220	610	80
		7/1/2010	2.0	5.0	1.0	150	610	80
Landfill/Digester Gas Lean Burn	500≤HP<1,350	1/1/2008	3.0	5.0	1.0	220	610	80
		7/1/2010	2.0	5.0	1.0	150	610	80
Emergency	25<HP<130	1/1/2009	610	387	N/A	N/A	N/A	N/A
	HP>130		2.0	4.0	1.0	160	540	86

[a]Owners and operators of stationary non-certified SI engines may choose to comply with the emission standards in units of either g/HP-hr or ppmvd at 15 percent O_2.

[b]Owners and operators of new or reconstructed non-emergency lean burn SI stationary engines with a site rating of greater than or equal to 250 brake HP located at a major source that are meeting the requirements of 40 CFR part 63, subpart ZZZZ Table 2a do not have to comply with the CO emission standards of Table 1 of this subpart.

[c]The emission standards applicable to emergency engines between 25 HP and 130 HP are in terms of NO_x + HC.

[d]For purposes of this subpart, when calculating emissions of volatile organic compounds, emissions of formaldehyde should not be included.

[76 FR 37975, June 28 2011]

Slop Oil/Condensate Storage Tank Emissions

Storage Tank PTE Calculations - Working, Breathing and Flashing Emissions

Unit ID	Tank ID	Material Stored	Capacity		Turnovers per Year	Throughput		Working Losses	Breathing Losses	Flashing Losses	Total Losses	VOC 100%		Hex, BTEX, TMP (Ea) 3.33%		Total HAP 20.00%	
			gal	bbl		gal/yr	bbl/yr	lb/yr	lb/yr	lb/yr	lb/yr	lb/hr	tpy	lb/hr	tpy	lb/hr	tpy
TK-1	10E	Slop Oil/Condensate	16,800	400	60	1,000,000	23,810	6,840	2,644	0	9,484	1.08	4.74	0.04	0.16	0.22	0.95
TK-2	11E	Slop Oil/Condensate	16,800	400	60	1,000,000	23,810	6,840	2,644	0	9,484	1.08	4.74	0.04	0.16	0.22	0.95
TK-3	12E	Slop Oil/Condensate	16,800	400	60	1,000,000	23,810	6,840	2,644	0	9,484	1.08	4.74	0.04	0.16	0.22	0.95
TK-4	13E	Slop Oil/Condensate	16,800	400	60	1,000,000	23,810	6,840	2,644	0	9,484	1.08	4.74	0.04	0.16	0.22	0.95
		Total:	67,200	1,600	60	4,000,000	95,238					4.33	18.96	0.14	0.63	0.87	3.79

Notes:

1 - EPA TANKS 4.0.9d was used to determine the Slop Oil/Condensate Tank Working and Breathing (Standing) Losses.

2 - The ProMax process simulation software was used to estimate Flashing Losses from the slop oil/condensate storage tanks. The process simulation shows no flashing losses from the storage tanks.

Oak Grove TK-01 thru TK-04 - Vertical Fixed Roof Tank
Moundsville, West Virginia

Mixture/Component	Month	Daily Liquid Surf. Temperature (deg F) Avg.	Min.	Max.	Liquid Bulk Temp (deg F)	Vapor Pressure (psia) Avg.	Min.	Max.	Vapor Mol. Weight.	Liquid Mass Frac.	Vapor Mass Frac.	Mol. Weight	Basis for Vapor Pressure Calculations
Slop Hydrocarbon Liquids	All	58.69	48.72	64.69	62.66	8.3448	7.2915	9.5477	57.3304			98.32	
2,2-Dimethylbutane						3.3622	2.8897	4.0494	86.1770	0.0031	0.0027	86.18	Option 1: VPR2 = 3.365 VPR2 = 4.047
2-Methylpentane						2.5104	2.0490	3.0623	86.1800	0.0345	0.0195	86.18	Option 2: A=6.8291, B=1126.41, C=224.67
3-Methylpentane						2.3209	1.8902	2.7924	86.1770	0.0235	0.0133	86.18	Option 1: VPR2 = 1.884 VPR2 = 2.431
Benzene						1.3648	0.8464	1.8282	78.1100	0.0054	0.0033	78.11	Option 2: A=6.905, B=1211.033, C=220.79
Cyclohexane						1.0369	0.8848	1.2796	84.1600	0.0125	0.0031	84.16	Option 2: A=6.841, B=1201.53, C=222.65
Cyclopentane						2.9828	2.1862	4.0791	70.1300	0.0044	0.0028	70.13	Option 1: VPR2 = 2.287 VPR2 = 4.177
Decane (n)						0.0310	0.0207	0.0372	142.2900	0.0336	0.0002	142.29	Option 1: VPR2 = .020411 VPR2 = .032211
Ethane						477.2293	431.9129	527.0337	30.0700	0.0005	0.0616	30.07	Option 1: VPR2 = 438.71 VPR2 = 497.34
Heptane (n)						[illegible]	[illegible]	[illegible]	[illegible]	[illegible]	[illegible]	[illegible]	Option 2: [illegible]
Hexane (n)						1.7546	1.4148	2.1558	86.1700	0.0787	0.0310	86.17	Option 2: A=6.876, B=1171.17, C=224.41
Isobutane						35.4372	31.2931	41.4341	58.1200	0.0008	0.0718	58.12	Option 1: VPR2 = 31.362 VPR2 = 38.144
Isopentane						8.8178	7.3804	10.4372	72.1500	0.0350	0.0406	72.15	Option 1: VPR2 = 7.382 VPR2 = 8.423
Methylcyclopentane						1.0963	1.0851	1.3401	84.1600	0.0125	0.0035	84.16	Option 2: A=6.8532, B=1196.003, C=224.34
n-Butane						24.6284	21.0778	28.8399	58.1200	0.0338	0.1364	58.12	Option 1: VPR2 = 21.080 VPR2 = 28.098
Nonane (n)						0.0407	0.0498	0.0736	128.2600	0.1096	0.0015	128.26	Option 1: VPR2 = .051295 VPR2 = .068279
Octane (n)						0.1346	0.1591	0.1655	114.2300	0.3694	0.0054	114.23	Option 1: VPR2 = .112384 VPR2 = .145244
Pentane (n)						2.2404	2.2207	2.7704	72.1500	0.0407	0.0220	72.15	Option 2: A=6.7924, B=1064.65, C=232.0
Propane						103.3786	90.9417	116.2227	44.1000	0.0221	0.4464	44.11	Option 1: VPR2 = 92.73 VPR2 = 108.19

Identification
User Identification: Oak Grove TK-01 thru TK-04
City: Moundsville
State: West Virginia
Company: Williams Ohio Valley Midstream
Type of Tank: Vertical Fixed Roof Tank
Description: 400 bbl slop liquids storage tank

Tank Dimensions
Shell Height (ft): 20.00
Diameter (ft): 12.00
Liquid Height (ft): 20.00
Avg. Liquid Height (ft): 10.00
Volume (gallons): 16,800.00
Turnovers: 59.52
Net Throughput(gal/yr): 1,000,000.00
Is Tank Heated (y/n): N

Paint Characteristics
Shell Color/Shade: Gray/Light
Shell Condition: Good
Roof Color/Shade: Gray/Light
Roof Condition: Good

Roof Characteristics
Type: Cone
Height (ft): 0.00
Slope (ft/ft) (Cone Roof): 0.06

Breather Vent Settings
Vacuum Settings (psig): -0.03
Pressure Settings (psig): 0.03

Meterological Data used in Emissions Calculations: Pittsburgh, Pennsylvania (Avg Atmospheric Pressure = 14.11 psia)

Emissions Report for: Annual

Oak Grove TK 01 thru TK 04 Vertical Fixed Roof Tank
Moundsville, West Virginia

Components	Losses(lbs) Working Loss	Breathing Loss	Total Emissions
Slop Hydrocarbon Liquids	6,840.14	2,644.03	9,484.17
Propane	3,162.68	1,250.69	4,414.15
Nonane (n)	10.25	3.88	14.13
Decane (n)	1.00	0.02	1.02
Iso-Butane	489.39	188.13	677.52
n-Butane	2,768.18	409.73	3,178.32
Iso-Pentane	338.02	121.01	459.03
Hexane (n)	356.46	193.44	550.90
Cyclopentane	[illegible]	18.13	36.24
2,2 Dimethylbutane	18.78	7.26	26.04
2-Methylpentane	133.54	51.62	185.15
3-Methylpentane	81.57	31.53	113.10
Heptane (n)	212.25	82.04	294.29
Methylcyclopentane	25.85	9.98	35.81
Benzene	2.26	0.87	3.13
Cyclohexane	21.46	8.29	29.74
Hexane (n)	272.77	105.33	378.01
Octane (n)	64.06	24.76	88.82
Ethane	360.72	139.34	500.06

Truck Load-Out

Unit ID	Description	S	P	MW	T	CE	L_L	T-Put	VOC AP-42 Sect 5.2		n-Hex, BTEX, TMP (ea) 3.33% of VOC		Total HAP 20.0% of VOC	
		sat. fac.	psia	lb/lb-mol	°R	%	lb/Mgal	Mgal/yr	lb/hr	tpy	lb/hr	tpy	lb/hr	tpy
TL-1 (14E)	Slop Oil/Condensate	1.45	5.00	51.33	512.55	—	9.05	4,000	27.13	18.09	0.90	0.60	5.43	3.62
								Efficiency:	0.0%					
								Controlled:	27.13	18.09	0.90	0.60	5.43	3.62

Notes: 1 - Emission factors and formulas are from AP-42 Section 5.2 "Transportation and Marketing of Petroleum Liquids":

$L_L = 12.46 \times S \times P \times MW / T \times (1 - CE)$

where:
- L_L = Loading loss, lb/1000 gal of liquid loaded.
- S = Saturation factor, use 1.45 for "splash loading".
- P = True vapor pressure of liquid loaded, psia. Estimated as shown.
- MW = molecular weight of vapors, lb/lb-mol. Obtained from EPA TANKS 4.0.
- T = Temperature of bulk liquid loaded, °R = °F + 460. Obtained from EPA TANKS 4.0.
- CE = Overall emission reduction efficiency (collection efficiency x control efficiency).

5 - Estimated load-out at: 50 gpm; which results in: 1,334 hr/yr of operation.

6 - **Emission factors in AP-42 are NOT EPA-recommended emission limits.** Because emission factors essentially represent an average of a range of emission rates, a permit limit using an AP-42 emission factor would result in half of the sources being in noncompliance.

Amine Process Unit (APU)

Unit ID	Description	Flow Rate MMscfd	Flow Rate lb/hr	Safety	lb/hr	VOC (Propane) 0.002% lb/hr	VOC (Propane) 0.002% tpy	CO2 95.942% lb/hr	CO2 95.942% tpy	CH4 0.003% lb/hr	CH4 0.003% tpy	CO2e CH4 GWP: 25 lb/hr	CO2e CH4 GWP: 25 tpy
V-01 (16E)	Amine Unit - Acid Gas	0.4305	1,973.44	2.50	4,934	0.11	0.49	4,733	20,732	0.17	0.74	4,738	20,751
					Total:	0.11	0.49	4,733	20,732	0.17	0.74	4,738	20,751

Unit ID	Description	Flow Rate MMscfd	Flow Rate lb/hr	Safety	lb/hr	VOC (Propane) 0.456% lb/hr	VOC (Propane) 0.456% tpy	CO2 1.271% lb/hr	CO2 1.271% tpy	CH4 1.204% lb/hr	CH4 1.204% tpy	CO2e CH4 GWP: 25 lb/hr	CO2e CH4 GWP: 25 tpy
V-01 (16E)	Amine Unit - Flash Gas	0.0124	40.65	2.50	102	na - See Process Flare (FL-1 (8E))							
					Pre-Control:	na - See Process Flare (FL-1 (8E))							
					Flash Gas Control:	99%		—		99%		—	
					Controlled:	na - See Process Flare (FL-1 (8E))							

Notes: 1 - Amine process unit (APU) emissions are based on process simulation done by the Dow Chemical Company Gas Treating Technology Group.
2 - The amine unit flash gas (V-01' (16E') will either be used as fuel gas or burned in the Process Flare (FL-1 (8E)). Worst-case assumption is the flash gas is sent to the flare for destruction.

Oil & Gas

Simulation Summary
Williams Oak Grove Deethanizer

Outlet Streams

STREAM-ID		2	5	9
Stream Name		Treated Gas	Flash Gas	
Outlet Block		Treated Gas	Flash Gas	Acid Gas
Temperature	deg F	125.3454	116.0635	120.0000
Pressure	Psi (g)	642.4893	75.0000	6.4336
Vapor Fraction (mol/mol)	-	1.0000	1.0000	1.0000
Flowrate	lb/hr	2.1313E+05	40.6516	1973.4357
Volume Flow (Liquid)	USgal/min			
Volume Flow (Vapor)	MMSCFD @60F	65.2285	1.2448E-02	0.4305
Water	mass %	0.1622	0.8945	3.5978
Carbon Dioxide	mass %	1.8544E-03	1.2709	95.9423
Nitrogen	mass %	0.0000	0.0000	0.0000
Methane	mass %	1.2983	1.2035	3.4323E-03
Ethane	mass %	97.9399	96.1749	0.4541
Propane	mass %	0.5948	0.4559	2.2814E-03
TOTAL	mass %	100.0000	100.0000	100.0000

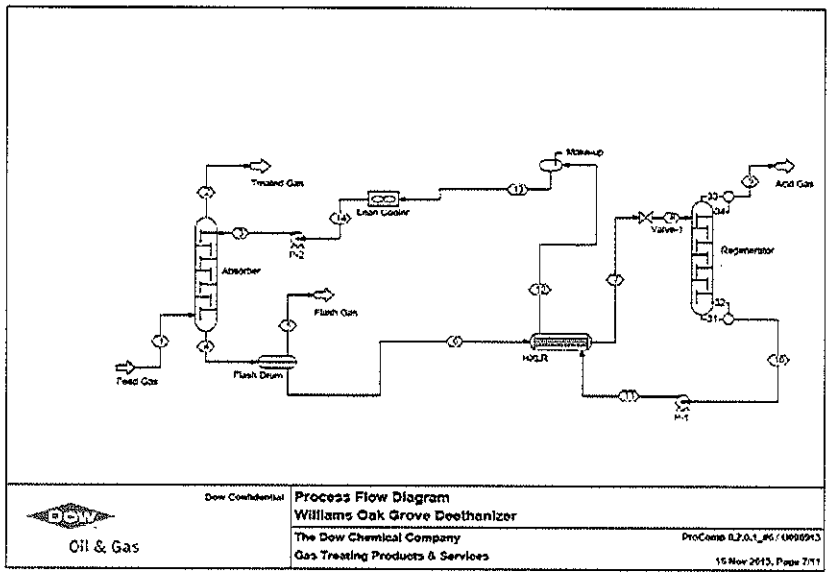

Reciprocating Compressors - Rod Packing Leaks (RPC)

Recprocating Compressor - Rod Packing Leaks

Unit Description	No. of Recip Comp-ressors	Cyl per Recip Comp-ressor	scfh per Cylinder	Contin-gency	Total Leak Rate MMscf/yr	VOC 200 lb/MMscf lb/hr	VOC tpy	HCHO — lb/MMscf lb/hr	HCHO tpy	n-Hex, BTEX (Ea) — lb/MMscf lb/hr	n-Hex, BTEX (Ea) tpy	Total HAP — lb/MMscf lb/hr	Total HAP tpy	CO2 — lb/MMscf lb/hr	CO2 tpy	CH4 42,275 lb/MMscf lb/hr	CH4 tpy	CO2e CH4 GWP = 25 lb/MMscf lb/hr	CO2e tpy
Rod Packing - TXP1 Residue Gas	3	6.0	15	15%	2.72	0.06	0.27	—	—	—	—	—	—	—	—	13.13	57.49	328	1,437
Rod Packing - Stabilized Gas	4	6.0	15	15%	3.63	na - See Process Flare (FL-1 (8E))													

Engine Crankcase Emissions (Combustion Gas)

Operating hr/yr: 500

Unit Description	GEN-1 Horsepower (bhp)	Leak Rate 0.50 scf/bhp-hr MMscf/yr	Safety Factor	VOC 22.68 lb/MMscf lb/hr	VOC tpy	HCHO 1.89 lb/MMscf lb/hr	HCHO tpy	n-Hex, BTEX (Ea) 0.50 lb/MMscf lb/hr	n-Hex, BTEX (Ea) tpy	Total HAP 2.98 lb/MMscf lb/hr	Total HAP tpy	CO2 12,803 lb/MMscf lb/hr	CO2 tpy	CH4 21 lb/MMscf lb/hr	CH4 tpy	CO2e CH4 GWP = 25 lb/MMscf lb/hr	CO2e tpy
Crankcase - GEN-1	224	0.98	250%	0.11	0.03	0.01	2.3E-03	2.4E-03	6.1E-04	0.01	3.7E-03	63	16	0.10	0.03	65	16
Total RPC Emissions:				0.17	0.30	0.01	2.3E-03	2.4E-03	6.1E-04	0.01	3.7E-03	62.81	15.70	13.23	57.52	394	1,454

Notes:

1 - Misc. equipment leaks is a broad category covering leaks of natural gas from sealed surfaces, such as packing and gaskets, resulting from the wear of mechanical joints, seals, and rotating surfaces over time. It also includes the crankcase emissions from reciprocating engines.

2 - Rod packing leaks include three (3) TXP1 residue gas reciprocating copressors. Note that the rod packing leaks from the stabilized gas reciprocating compressors are routed to the Flare.

3 - To be conservative, and to account for potential future changes, the following "worst-case" Residue gas characteristics were assumed:

Pollutant	Representative Gas Analysis	Worst-Case Assumption
CO2	— lb/MMscf	— lb/MMscf
CH4	40,322 lb/MMscf	42,275 lb/MMscf
VOC	— lb/MMscf	200 lb/MMscf
Total HAP	— lb/MMscf	— lb/MMscf

4 - Estimates of Recip Compressor Leaks are based on vendor data w/ an appropriate contingency.

5 - Engine crankcase emissions are based on vendor data: "As a general rule, blow-by (i.e., crankcase emissions) on a *new* engine is approximately 0.5 scf/bhp-hr." A "safety factor" is used to account for increasing blow-by as the engines "wear".

6 - Crankcase emissions , from standby generator (GEN-1), are estimated as follows:

(Data from Olympian G150LG2 Data Sheet and Emissions Calculation Spreadsheet.)

Tot Engine Exhaust (TEEx) (Vol) 1,507 acf/min 12 MMscf/yr TEEx*

Pollutant	GEN-1 PTE	Crankcase Emission Factor**
Crankcase THC emissions (Mass)	0.27 tpy THC	46.19 lb THC / MMscf TEEx
Crankcase VOC emissions (Mass)	0.13 tpy VOC	22.68 lb VOC / MMscf TEEx
Crankcase HCHO emissions (Mass)	0.01 tpy HCHO	1.89 lb HCHO / MMscf TEEx
Crankcase BTEX (ea) emissions (Mass)	0.00 tpy BTEX	0.22 lb BTEX / MMscf TEEx
Crankcase HAP (tot) emissions (Mass)	0.02 tpy HAP	2.98 lb HAP / MMscf TEEx
Crankcase CO2 emissions (Mass)	76 tpy CO2	12,803 lb CO2 / MMscf TEEx
Crankcase CH4 emissions (Mass)	0.13 tpy CH4	21 lb CH4 / MMscf TEEx
Crankcase CH4 emissions (Mass)	0.00 tpy N2O	0 lb CH4 / MMscf TEEx
Crankcase CO2e emissions (Mass)	79 tpy CO2e	13,340 lb CO2e /MMscf TEEx

* Conversion from acf/min to scf/yr based on 500 hr/yr, 1,550 oF exhaust temp, and 68 oF std temp.

** Crankcase EmFact = PTE (tpy) from a G150LG2 Engine ÷ Tot Engine Exhaust (TEEx) (MMsf/yr).

Centrifugal Compressor - Dry Gas Seal Leaks (DGS)

Unit Description	No. of Compressors	Leak Rate Per Centrifugal Compressor		Contin-gency	Total Leak Rate	VOC 13,600 lb/MMscf		HCHO na lb/MMscf		Hex,BTEX,TMP-Ea 33 lb/MMscf		Total HAP 200 lb/MMscf		CO2 300 lb/MMscf		CH4 37,300 lb/MMscf		CO2e CH4 GWP = 25 lb/MMscf	
		scf/hr	MMscf/yr		MMscf/yr	lb/hr	tpy	lb/hr	tpy	lb/hr	tpy	lb/hr	tpy	lb/hr	tpy	lb/hr	tpy	lb/hr	tpy
Compressors - Inlet	3	16.2	0.14	15%	0.49	0.76	3.33	—	—	1.9E-03	0.01	0.01	0.05	0.02	0.07	2	9	52	228

Unit Description	No. of Compressors	Leak Rate Per Centrifugal Compressor		Contin-gency	Total Leak Rate	VOC 200 lb/MMscf		HCHO na lb/MMscf		Hex,BTEX,TMP-Ea — lb/MMscf		Total HAP — lb/MMscf		CO2 — lb/MMscf		CH4 42,275 lb/MMscf		CO2e CH4 GWP = 25 lb/MMscf	
		scf/hr	MMscf/yr		MMscf/yr	lb/hr	tpy	lb/hr	tpy	lb/hr	tpy	lb/hr	tpy	lb/hr	tpy	lb/hr	tpy	lb/hr	tpy
Compressors - Residue	9	48.6	0.43	15%	4.41	0.10	0.44	—	—	—	—	—	—	—	—	21	93	532	2,328
TOTAL DRY GAS SEAL LEAKS:						0.86	3.77	—	—	1.9E-03	0.01	0.01	0.05	0.02	0.07	23	102	584	2,557

Notes:

1 - Centrifugal compressors in inlet gas service include mole sieve regeneration gas compressors.

2 - Centrifugal compressors in residue gas service include TXP1, TXP2, and TXP3 expander/compressors and TXP1/TXP2/TXP3 residue gas compressors.

3 - To be conservative, and to account for potential future changes, the following "worst-case" Gas characteristics were assumed:

Inlet Gas	Representative Gas Analysis	Worst-Case Assumption
CO2	219 lb/MMscf	300 lb/MMscf
CH4	31,049 lb/MMscf	37,300 lb/MMscf
VOC	11,271 lb/MMscf	13,600 lb/MMscf
Total HAP	127 lb/MMscf	200 lb/MMscf

Residue Gas	Representative Gas Analysis	Worst-Case Assumption
CO2	— lb/MMscf	— lb/MMscf
CH4	40,322 lb/MMscf	42,275 lb/MMscf
VOC	— lb/MMscf	200 lb/MMscf
Total HAP	— lb/MMscf	— lb/MMscf

Process Piping Fugitives – Gas / Light Liquid

Unit	Description	Component (Unit) Type (Gas)	Unit Count	THC Factor lb/hr/Unit	LDAR Control Credit	Tot Hydrocarbons (THC) lb/hr	tpy	VOC 24.02 Wgt% lb/hr	tpy	Hex,BTEX,TMP-ea 0.06 Wgt% lb/hr	tpy	Total HAP 0.35 Wgt% lb/hr	tpy	CO2 0.53 Wgt% lb/hr	tpy	CH4 65.87 Wgt% lb/hr	tpy	CO2e GWP = 25 lb/hr	tpy
FUG-G (15E)	Process Piping Fugitives (Gas)	Valves	3,550	0.00992	87%	4.58	20.05	1.10	4.82	2.7E-03	0.01	0.02	0.07	0.02	0.11	3.02	13.21	75	330
		Pump Seals	—	—	—	—	—	—	—	—	—	—	—	—	—	—	—	—	—
		Other	169	0.01940	0%	3.28	14.36	0.79	3.45	1.9E-03	0.01	0.01	0.05	0.02	0.08	2.16	9.46	54	237
		Connectors	4,841	0.00044	33%	1.43	6.26	0.34	1.50	8.4E-04	3.7E-03	5.1E-03	0.02	0.01	0.03	0.94	4.13	24	103
		Flanges	6,372	0.00086	0%	5.48	24.00	1.32	5.76	3.2E-03	0.01	0.02	0.08	0.03	0.13	3.61	15.81	90	395
		Open-ended lines	166	0.00441	0%	0.73	3.21	0.18	0.77	4.3E-04	1.9E-03	2.6E-03	0.01	3.9E-03	0.02	0.48	2.11	12	53
			15,098		Pre-Control:	46.84	205.17	11.25	49.28	0.03	0.12	0.17	0.72	0.25	1.09	30.86	135.15	772	3,380
					Controlled:	15.50	67.88	3.72	16.30	0.01	0.04	0.05	0.24	0.08	0.36	10.21	44.71	255	1,118

Unit	Description	Component (Unit) Type (Light Liquid)	Unit Count	THC Factor lb/hr/Unit	LDAR Control Credit	Tot Hydrocarbons (THC) lb/hr	tpy	VOC 100.00 Wgt% lb/hr	tpy	Hex,BTEX,TMP-ea 0.23 Wgt% lb/hr	tpy	Total HAP 1.38 Wgt% lb/hr	tpy	CO2 — Wgt% lb/hr	tpy	CH4 — Wgt% lb/hr	tpy	CO2e GWP = 25 lb/hr	tpy
FUG-L (15E)	Process Piping Fugitives (Light Liquid)	Valves	1,775	0.00551	84%	1.57	6.86	1.57	6.86	3.6E-03	0.02	0.02	0.09	—	—	—	—	—	—
		Pump Seals	140	0.02866	69%	1.24	5.43	1.24	5.43	2.9E-03	0.01	0.02	0.08	—	—	—	—	—	—
		Other	85	0.01653	0%	1.40	6.12	1.40	6.12	3.2E-03	0.01	0.02	0.08	—	—	—	—	—	—
		Connectors	2,421	0.00046	33%	0.75	3.29	0.75	3.29	1.7E-03	0.01	0.01	0.05	—	—	—	—	—	—
		Flanges	3,186	0.00024	0%	0.77	3.38	0.77	3.38	1.8E-03	0.01	0.01	0.05	—	—	—	—	—	—
		Open-ended lines	83	0.00309	0%	0.26	1.12	0.26	1.12	5.9E-04	2.6E-03	3.5E-03	0.02	—	—	—	—	—	—
			7,689		Pre-Control:	17.33	75.90	17.33	75.90	0.04	0.18	0.24	1.05	—	—	—	—	—	—
					Controlled:	5.98	26.20	5.98	26.20	0.01	0.06	0.08	0.36	—	—	—	—	—	—
		TOTAL PRE-CONTROL FUGITIVE EMISSIONS:				64.17	281.07	28.58	125.17	0.07	0.30	0.41	1.78	0.25	1.09	30.86	135.15	772	3,380
		TOTAL CONTROLLED FUGITIVE EMISSIONS:				21.48	94.08	9.70	42.50	0.02	0.10	0.14	0.60	0.08	0.36	10.21	44.71	255	1,118

Notes: 1 - Assumed 8,760 hours per year of fugitive emissions.

2 - Gas/Vapor emissions calculated using EPA Protocol for Equipment Leak Emission Estimates, EPA-453/R-95-017, Nov 1995.

TABLE 2.4 O&G PROD (AVE)	Gas kg/hr	Gas lb/hr	Light Liquid kg/hr	Light Liquid lb/hr
Valves	0.00450	0.00992	0.00250	0.00551
Pump Seals	na	na	0.01300	0.02866
Others	0.00880	0.01940	0.00750	0.01653
Connectors	0.00020	0.00044	0.00021	0.00046
Flanges	0.00039	0.00086	0.00011	0.00024
Open-Ended Lines	0.00200	0.00441	0.00140	0.00309

3 - Light Liquid Component counts are estimated at **50%** of Gas Components.

4 - "Other" components include compressor seals, relief valves, diaphragms, drains, meters, etc.

5 - To be conservative, the following emission characteristics were assumed:

Pollutant	Gas (Inlet)	Light Liquid (NGL)
Carbon Dioxide	0.53 Wgt%	— Wgt%
Methane	65.87 Wgt%	— Wgt%
VOC	24.02 Wgt%	100.00 Wgt%
Total HAP	0.35 Wgt%	1.38 Wgt%

6 - The facility has implemented an LDAR Program. Control effectiveness is estimated as follows:

CONTROL EFFECTIVENESS FOR AN LDAR PROGRAM AT A SOCMI PROCESS UNIT

Equipment Type and Service	Control Effectiveness (%) Monthly Monitoring 10,000 ppmv Leak Definition	Quarterly Monitoring 10,000 ppmv Leak Definition	HON[a]
Valves - gas	87	67	92
Valves - light liquid	84	61	88
Pumps - light liquid	69	45	75
Compressors - gas	[b]	[b]	93
Connectors - gas and light liquid	[b]	33	[b]
Pressure relief devices - gas	[b]	44	[b]

[a] Control effectiveness attributed to the requirements of the HON equipment leak regulation is estimated based on equipment-specific leak definitions and performance levels.

[b] Data are not available to estimate control effectiveness.

Potentially Applicable

AP-42 and GHG EMISSION FACTORS

(Preferentially use test data or vendor data where available)

	Pollutant	GAS-FIRED ENGINES AP-42 Table 3.2-1; 3.2-2; 3.2-3 07/00			GAS-FIRED TURBINES AP-42 Table 3.1-1; 3.1-2a; 3.1-3 04/00		
		2SLB lb/MMBtu	4SLB lb/MMBtu	4SRB lb/MMBtu	Uncontrolled lb/MMBtu	Water Injection lb/MMBtu	Lean Pre-Mix# lb/MMBtu
CRITERIA	NOX (≥ 90% Load)	3.17E+00	4.08E+00	2.21E+00	3.20E-01	1.30E-01	9.90E-02
	CO (≥ 90% Load)	3.86E-01	3.17E-01	3.72E+00	8.20E-02	3.00E-02	1.50E-02
	THC (TOC)	1.64E+00	1.47E+00	3.58E-01	1.10E-02	1.10E-02	1.10E-02
	NMHC (THC-CH4)	1.90E-01	2.20E-01	1.28E-01	2.40E-03	2.40E-03	2.40E-03
	NMNEHC (NMHC-C2H6)	1.19E-01	1.15E-01	5.76E-02	2.10E-03	2.10E-03	2.10E-03
	VOC (NMNEHC+HCHO)	1.74E-01	1.68E-01	7.81E-02	2.81E-03	2.81E-03	2.12E-03
	SO2*** (2,000 gr-S/MMscf)	5.88E-04	5.88E-04	5.88E-04	5.88E-04	5.88E-04	5.88E-04
	PM10/2.5 (Filter+Cond)	4.83E-02	9.99E-03	1.94E-02	6.60E-03	6.60E-03	6.60E-03
HAPs	Benzene	1.94E-03	4.40E-04	1.58E-03	1.20E-05	1.20E-05	9.10E-07
	Ethylbenzene	1.08E-04	3.97E-05	2.48E-05	3.20E-05	3.20E-05	3.20E-05
	Formaldehyde (HCHO)	5.52E-02	5.28E-02	2.05E-02	7.10E-04	7.10E-04	2.00E-05
	n-Hexane	4.45E-04	1.11E-03	---	---	---	---
	Toluene	9.63E-04	4.08E-04	5.58E-04	1.30E-04	1.30E-04	1.30E-04
	2,2,4-Trimethylpentane	8.46E-04	2.50E-04	---	---	---	---
	Xylenes	2.68E-04	1.84E-04	1.95E-04	6.40E-05	6.40E-05	6.40E-05
	Other HAPs	1.96E-02	1.69E-02	9.42E-03	1.06E-04	1.06E-04	1.06E-04
GHG	CO2**** (GWP=1)	*1.17E+02*	*1.17E+02*	*1.17E+02*	*1.17E+02*	*1.17E+02*	*1.17E+02*
	CH4 (GWP=25)	1.45E+00	1.25E+00	2.30E-01	8.60E-03	8.60E-03	8.60E-03
	N2O (GWP=298)	*2.20E-04*	*2.20E-04*	*2.20E-04*	3.00E-03	3.00E-03	3.00E-03
	CO2e	1.53E+02	1.48E+02	1.23E+02	1.18E+02	1.18E+02	1.18E+02

(#Lean Pre-Mix - aka: Dry Low Emissions (DLE or DLN) and SoLoNOx)

	Pollutant	GAS-FIRED EXTERNAL COMBUSTION AP-42 Table 1.4-1; 1.4-2; 1.4-3 (<100 MMBtu/hr) 07/98			FLARES 13.5-1 01/95	DIESEL ENGINES 3.3-1; 3.3-2 10/96
		Uncontrolled lb/MMBtu	LoNOx Burners lb/MMBtu	Flue Gas Recirc lb/MMBtu	(Combustion) lb/MMBtu	Uncontrolled lb/MMBtu
CRITERIA	NOX	9.80E-02	4.90E-02	3.14E-02	6.80E-02	4.41E+00
	CO	8.24E-02	8.24E-02	8.24E-02	3.70E-01	9.50E-01
	THC (TOC)	1.08E-02	1.08E-02	1.08E-02	1.40E-01	3.60E-01
	NMHC (THC-CH4)	8.53E-03	8.53E-03	8.53E-03	1.38E-01	3.53E-01
	NMNEHC (NMHC-C2H6)	5.49E-03	5.49E-03	5.49E-03	*1.35E-01*	3.50E-01
	VOC (NMNEHC+HCHO)	5.56E-03	5.56E-03	5.56E-03	*1.35E-01*	3.60E-01
	SO2 (2,000 gr-S/MMscf)	5.88E-04	5.88E-04	5.88E-04	*5.88E-04*	2.90E-01
	PM10/2.5 (Filter+Condense)	7.45E-03	7.45E-03	7.45E-03	*7.45E-03*	3.10E-01
HAPs	Benzene	2.06E-06	2.06E-06	2.06E-06	*2.06E-06*	9.33E-04
	Ethylbenzene	---	---	---	---	---
	HCHO (Formaldehyde)	7.35E-05	7.35E-05	7.35E-05	*7.35E-05*	1.18E-03
	n-Hexane	1.76E-03	1.76E-03	1.76E-03	*1.76E-03*	---
	Toluene	3.33E-06	3.33E-06	3.33E-06	*3.33E-06*	4.09E-04
	2,2,4-Trimethylpentane	---	---	---	---	---
	Xylenes	---	---	---	---	2.85E-04
	Other HAPs	1.86E-06	1.86E-06	1.86E-06	*1.86E-06*	1.05E-03
GHG	CO2 (GWP=1)	1.18E+02	1.18E+02	1.18E+02	*1.18E+02*	1.64E+02
	CH4 (GWP=25)	2.25E-03	2.25E-03	2.25E-03	*2.25E-03*	*6.61E-03*
	N2O (GWP=298)	2.16E-03	6.27E-04	6.27E-04	*2.16E-03*	*1.32E-03*
	CO2e	1.18E+02	1.18E+02	1.18E+02	1.18E+02	1.65E+02

Fuel Type	40 CFR 98 - DEFAULT EMISSION FACTORS Table C-1 to Subpart C of Part 98		Table C-2 to Subpart C of Part 98	
	Default HHV	Carbon Dioxide lb CO2/MMBtu	Methane lb CH4/MMBtu	Nitrous Oxide lb N2O/MMBtu
Fuel Oil No. 2 (Diesel)	0.138 MMBtu/gal	1.61E+02	6.61E-03	1.32E-03
Natural Gas	1,026 Btu/scf	1.17E+02	2.20E-03	2.20E-04

Global Warming Potential (100 Yr) (GWP) Table A-1 to Subpart A of Part 98		
CO2	CH4*	N2O#
1	25	298

#Revised by EPA on 11/29/13

*Converted Ext Comb Emission Factors to lb/MMBtu by dividing lb/MMscf by AP-42 default high heating value of 1,020 Btu/scf.

**Converted GHG Emission Factors to lb/MMBtu by multiplying kg/MMBtu by 2.2046 lb/kg.

***Assumes 100% conversion of fuel sulfur to SO2 (2,000 gr/MMscf).

****Assumes 99.5% conversion of fuel carbon to CO2 for natural gas.

Conversion Factors

http://www.onlineconversion.com/

1.0 lb	=	453.5924 g
1.0 kg	=	2.2046 lb
1.0 hp	=	2,544.4332 Btu/hr
1.0 hp	=	745.6999 Watt
1.0 kW	=	3,412.1416 Btu/hr
1.0 kW-hr	=	1.3400 hp-hr
1.0 cf	=	7.4805 gal
1.0 gal H2O	=	8.3378 lb
1.0 cf H2O	=	62.3711 lb
1.0 m	=	3.2808 ft
1.0 km	=	0.6214 mi
1.0 acre	=	43,560.1742 ft2
1.0 °F	=	(°C*9/5)+32
1.0 °R	=	°F+459.67
1.0%	=	10,000 ppm
Std Temperature	=	60.0 oF
Std Pressure	=	14.696 psia
UGC (stp)	=	379.4820 cf/lb-mol

SUPPLEMENT 04

Insignificant Activities

Misc. Storage Tanks

Emission units which do not have any applicable requirements and which emit criteria pollutants (CO, NOx, SO2, VOC and PM) into the atmosphere at a rate of less than 1 pound per hour and less than 10,000 pounds per year (5 tpy) aggregate total for each criteria pollutant from all emission units.

Emission units which do not have any applicable requirements and which emit hazardous air pollutants (HAP) into the atmosphere at a rate of less than 0.1 pounds per hour and less than 1,000 pounds per year (0.5 tpy) aggregate total for all HAPs from all emission sources.

Please specify all emission units for which this exemption applies along with the quantity of pollutants emitted on an hourly and annual basis:

Williams Ohio Valley Midstream LLC

OAK GROVE GAS PLANT

Application for 45CSR30 Title V Operating Permit

Supplement 04 - Insignificant Activities

Misc Storage Tanks

(Include all emission units and air pollution control devices
that will be part of this permit application review, regardless of permitting status.)

Emission Unit ID[1]	Emission Point[2]	Emission Unit Description	Year Installed/ Modified	Design Capacity	Type[3] and Date of Change	Control Device[4]
---	---	00-V-823 Common Closed Drain Vessel	2014	2,200 gal	Existing	na
---	---	00-V-817 Flare Knockout Vessel	2014	25,000 gal	Existing	na
---	---	21-ST-810 Lube Oil Day Tank	2014	300 gal	Existing	na
---	---	21-V-809 Closed Drain Vessel	2014	4,500 gal	Existing	na
---	---	21-V-701 Hot Oil Surge Tank	2014	2,300 gal	Existing	na
---	---	21-V-828 De-Ethanizer Surge Tank	2014	70,000 gal	Existing	na
---	---	21-ST-801 De-Ionized Water Storage Tank	2014	16,800 gal	Existing	na
---	---	21-ST-802 Amine Storage Tank	2014	4,200 gal	Existing	na
---	---	21-ST-803 Raw Regen Water Storage Tank	2014	16,800 gal	Existing	na
---	---	21-ST-806 Used Amine Storage Tank	2014	25,000 gal	Existing	na
---	---	21-HTR-703 Hot Oil Heater	2014	2,662 gal	Existing	na
---	---	21-HTR-704 Hot Oil Heater	2014	2,662 gal	Existing	na
---	---	31-ST-980 Lube Oil Day Tank	2014	300 gal	Existing	na
---	---	32-ST-980 Lube Oil Day Tank	2014	300 gal	Existing	na
---	---	31-V-801 Feed Separator	2014	1,700 gal	Existing	na
---	---	32-V-801 Feed Separator	2014	1,700 gal	Existing	na
---	---	01-ST-863 Residue Compressor Lube Oil	2014	335 gal	Existing	na
---	---	01-ST-884 Turbo Expander Bullet Tank	2014	60 gal	Existing	na
---	---	01-V-868 Closed Drain Vessel	2014	370 gal	Existing	na
---	---	01-V-403 Cold Drain Tank	2014	3,500 gal	Existing	na
---	---	01-V-860 Inlet Gas Separator	2014	380 gal	Existing	na
---	---	01-V-402 Cold Separator	2014	7,500 gal	Existing	na
---	---	Diesel tank	2014	500 gal	Existing	na
---	---	Gasoline tank	2014	500 gal	Existing	na

[1] For Emission Units (or Sources) use the following numbering system: 1S, 2S, 3S, ... or other appropriate designation.
[2] For Emission Points use the following numbering system: 1E, 2E, 3E, ... or other appropriate designation.
[3] New, modification, removal, etc.
[4] For Control Devices use the following numbering system: 1C, 2C, 3C, ... or other appropriate designation.

SUPPLEMENT 05

Gas Analysis

---

§45-30-4.3.c.8 - The application forms shall include calculations or test data on which the information is based.

- **Inlet Gas Analysis – Design Basis**
- **Inlet Gas Summary – Design Basis**
- **Residue Gas Summary**
- **Ethane Product Summary**
- **Natural Gas Liquids (NGL) Summary**
- **Waste Gas Summary**
- **Waste Gas BTU Analysis**

Williams Ohio Valley Midstream LLC

OAK GROVE GAS PLANT

Application for 45CSR30 Title V Operating Permit

Supplement 05

Inlet Gas Analysis - Design Basis

Legacy Measurement Solutions Gooc

Shreveport, LA

318-226-7237

Customer	: 2259 - WILLIAMS	**Date Sampled**	: 11/01/2013
Station ID	: 5001	**Date Analyzed**	: 11/11/2013
Cylinder ID	: 5203	**Effective Date**	: 12/01/2013
Producer	:	**Cyl Pressure**	: 900
Lease	: FORT BEELER 12 INCH	**Temp**	: 60
Area	: 500 - OHIO VALLEY MID	**Cylinder Type**	: Spot
State	: WV	**Sample By**	: JM

COMPONENT	MOL%	GPM@14.73(PSIA)
Oxygen	0.0030	0.000
Nitrogen	0.4955	0.000
Methane	73.4443	0.000
Carbon-Dioxide	0.1887	0.000
Ethane	17.2512	4.630
Propane	6.0946	1.685
Iso-Butane	0.5849	0.192
Normal-Butane	1.3036	0.412
Iso-Pentane	0.2148	0.079
Normal-Pentane	0.2357	0.086
2,2-Dimethylbutane	0.0045	0.002
2,3-Dimethylbutane/CycloC5	0.0087	0.003
2-methylpentane	0.0393	0.016
3-methylpentane	0.0225	0.009
Normal-Hexane	0.0518	0.021
2,2-Dimethylpentane	0.0004	0.000
Methylcyclopentane	0.0062	0.002
BENZENE	0.0008	0.000
3,3-Dimethylpentane	0.0006	0.000
CYCLOHEXANE	0.0050	0.002
2-Methylhexane	0.0075	0.003
2,3-Dimethylpentane	0.0019	0.001
3-Methylhexane	0.0075	0.003
1,t2-DMCYC5 / 2,2,4-TMC5	0.0001	0.000
1,t3-Dimethylcyclopentane	0.0002	0.000
N-Heptane	0.0108	0.005
METHYLCYCLOHEXANE	0.0059	0.003
2,5-Dimethylhexane	0.0005	0.000
2,3-Dimethylhexane	0.0007	0.000
TOLUENE	0.0013	0.000
2-Methylheptane	0.0017	0.001
4-Methylheptane	0.0007	0.000
3-Methylheptane	0.0014	0.001
1,t4-Dimethylcyclohexane	0.0007	0.000
N-OCTANE / 1,T2-DMCYC6	0.0022	0.001
1,t3-DMCYC6/1,C4-DMCYC6/1,C2,C3-TMCYC5	0.0000	0.000
2,4,4 TMC6	0.0000	0.000

Williams Ohio Valley Midstream LLC

OAK GROVE GAS PLANT

Application for 45CSR30 Title V Operating Permit

Supplement 05

Inlet Gas Summary - Design Basis

Component	CAS	Formula	Molecular Weight	Mole % (Vol %)	Mole Fraction	Weighted Sum	Weight %	lb/MMscf
Nitrogen	7727-37-9	N2	32.00	0.49550	0.004955	0.1586	0.738	417.82
Hydrogen Sulfide	2148-87-8	H2S	34.08	---	---	---	---	---
Carbon Dioxide	124-38-9	CO2	44.01	0.18870	0.001887	0.0830	0.386	218.84
Methane*	75-82-8	CH4	16.04	73.44430	0.734453	11.7824	54.831	31,048.71
Ethane*	74-84-0	C2H6	30.07	17.25120	0.172514	5.1873	24.140	13,669.52
Propane**	74-98-6	C3H8	44.10	6.09460	0.060947	2.6875	12.507	7,081.99
i-Butane**	75-28-5	C4H10	58.12	0.58490	0.005849	0.3400	1.582	895.86
n-Butane**	106-97-8	C4H10	58.12	1.30360	0.013036	0.7577	3.526	1,996.65
Cyclopentane**	287-92-3	C5H10	70.13	---	---	---	---	---
i-Pentane**	78-78-4	C5H12	72.15	0.21480	0.002148	0.1550	0.721	408.39
n-Pentane**	109-66-0	C5H12	72.15	0.23570	0.002357	0.1701	0.791	448.13
Cyclohexane**	110-82-7	C6H12	84.16	0.01120	0.000112	0.0094	0.044	24.84
Other Hexanes**	varies	C6H14	86.18	0.07500	0.000750	0.0646	0.301	170.32
Methylcyclohexane**	varies	C7H14	98.19	0.00620	0.000062	0.0061	0.028	16.04
Heptanes**	varies	C7H16	100.20	0.02870	0.000287	0.0288	0.134	75.78
C8+ Heavies**	varies	C8H18	114.5 est	0.00870	0.000087	0.0100	0.046	26.25
Benzene***	71-43-2	C6H6	78.11	0.00080	0.000008	0.0006	0.003	1.65
Ethylbenzene***	100-41-4	C8H10	106.17	0.00005	0.000001	0.0001	0.000	0.14
n-Hexane***	110-54-3	C6H14	86.18	0.05180	0.000518	0.0446	0.208	117.63
Toluene***	108-88-3	C7H8	92.14	0.00130	0.000013	0.0012	0.006	3.16
2,2,4-TMP (i-Octane)***	540-84-1	C8H18	114.23	0.00005	0.000001	0.0001	0.000	0.15
Xylenes***	1330-20-7	C8H10	106.17	0.00160	0.000016	0.0017	0.008	4.48
Totals:				**100.00**	**1.00**	**21.49**	**100.00**	**56,626**
Total THC:				**99.31**	**0.99**	**21.26**	**98.88**	**55,990**
Total VOC:				**8.62**	**0.09**	**4.28**	**19.90**	**11,271**
Total HAP:				**0.06**	**0.001**	**0.05**	**0.22**	**127**

* = Hydrocarbon (HC) ** = also Volatile Organic Compound (VOC) *** = also Hazardous Air Pollutant (HAP)

#UGC (Universal Gas Constant) = 379.482 scf/lb-mol @ 60 °F and 14.696 psia. Pound "X"/scf = M% of "X" * MW of "X" / UGC

To be conservative, and to account for potential future changes in the gas quality, the following "worst-case" values were assumed:

Component	CAS	Formula	Representative Gas Analysis			Worst-Case (120%)		
			Mole %	Wgt %	lb/MMscf	Mole %	Wgt %	lb/MMscf
Carbon Dioxide	124-38-9	CO2	0.189	0.386	219	0.259	0.530	300
Methane	75-82-8	CH4	73.444	54.831	31,049	88.231	65.870	37,300
Ethane	74-84-0	C2H6	17.251	24.140	13,670	20.823	29.138	16,500
VOC	Various	C3+	8.619	19.905	11,271	10.400	24.017	13,600
Benzene	71-43-2	C6H6	0.001	0.003	2	0.005	0.018	10
Ethylbenzene	110-54-3	C8H10	0.000	0.000	0	0.004	0.018	10
n-Hexane	100-41-4	C6H14	0.052	0.208	118	0.066	0.265	150
Toluene	108-88-3	C7H8	0.001	0.006	3	0.004	0.018	10
2,2,4-TMP (i-Octane)	540-84-1	C8H18	0.000	0.000	0	0.003	0.018	10
Xylenes	1330-20-7	C8H10	0.002	0.008	4	0.004	0.018	10
Total HAP	Various	C6+	0.056	0.225	127	0.087	0.353	200

Inlet Gas Summary - Design Basis

Williams Ohio Valley Midstream LLC

OAK GROVE GAS PLANT

Application for 45CSR30 Title V Operating Permit

Supplement 05

Residue Gas Summary

Component	CAS	Formula	Molecular Weight	Mole % (Vol %)	Mole Fraction	Weighted Sum	Weight %	lb/MMscf
Nitrogen	7727-37-9	N2	32.00	---	---	---	---	---
Hydrogen Sulfide	2148-87-8	H2S	34.08	---	---	---	---	---
Carbon Dioxide	124-38-9	CO2	44.01	---	---	---	---	---
Methane*	75-82-8	CH4	16.04	95.38600	0.953822	15.3016	91.571	40,322.46
Ethane*	74-84-0	C2H6	30.07	4.47600	0.044758	1.3458	8.054	3,546.51
Propane**	74-98-6	C3H8	44.10	0.14200	0.001420	0.0626	0.375	165.00
i-Butane**	75-28-5	C4H10	58.12	---	---	---	---	---
n-Butane**	106-97-8	C4H10	58.12	---	---	---	---	---
Cyclopentane**	287-92-3	C5H10	70.13	---	---	---	---	---
i-Pentane**	78-78-4	C5H12	72.15	---	---	---	---	---
n-Pentane**	109-66-0	C5H12	72.15	---	---	---	---	---
Cyclohexane**	110-82-7	C6H12	84.16	---	---	---	---	---
Other Hexanes**	varies	C6H14	86.18	---	---	---	---	---
Methylcyclohexane**	varies	C7H14	98.19	---	---	---	---	---
Heptanes**	varies	C7H16	100.20	---	---	---	---	---
C8+ Heavies**	varies	C8H18	114.5 est	---	---	---	---	---
Benzene***	71-43-2	C6H6	78.11	---	---	---	---	---
Ethylbenzene***	100-41-4	C8H10	106.17	---	---	---	---	---
n-Hexane***	110-54-3	C6H14	86.18	---	---	---	---	---
Toluene***	108-88-3	C7H8	92.14	---	---	---	---	---
2,2,4-TMP***	540-84-1	C8H18	114.23	---	---	---	---	---
Xylenes***	1330-20-7	C8H10	106.17	---	---	---	---	---
			Totals:	100.00	1.00	16.71	100.00	44,034
			Total THC:	100.00	1.00	16.71	100.00	44,034
			Total VOC:	0.14	0.00	0.06	0.37	165
			Total HAP:	0.00	0.000	0.00	0.00	0

* = Hydrocarbon (HC) ** = also Volatile Organic Compound (VOC) *** = also Hazardous Air Pollutant (HAP)

#UGC (Universal Gas Constant) = 379.482 scf/lb-mol @ 60 °F and 14.696 psia. Pound "X"/scf = M% of "X" * MW of "X" / UGC

To be conservative, and to account for potential future changes in the gas quality, the following "worst-case" values were assumed:

Component	CAS	Formula	Representative Gas Analysis			Worst-Case (120%)		
			Mole %	Wgt %	lb/MMscf	Mole %	Wgt %	lb/MMscf
Carbon Dioxide	124-38-9	CO2	---	---	---	--	--	---
Methane	75-82-8	CH4	95.386	91.571	40,322	100.005	96.005	42,275
Ethane	74-84-0	C2H6	4.476	8.054	3,547	5.427	9.765	4,300
VOC	Various	C3+	0.142	0.375	165	0.172	0.454	200
Benzene	71-43-2	C6H6	---	---	---	--	--	---
Ethylbenzene	110-54-3	C8H10	---	---	---	--	--	---
n-Hexane	100-41-4	C6H14	---	---	---	--	--	---
Toluene	108-88-3	C7H8	---	---	---	--	--	---
2,2,4-TMP	540-84-1	C8H18	---	---	---	--	--	---
Xylenes	1330-20-7	C8H10	---	---	---	--	--	---
Total HAP	Various	C6+	---	---	---	--	--	---

Residue Gas Summary

Williams Ohio Valley Midstream LLC

OAK GROVE GAS PLANT

Application for 45CSR30 Title V Operating Permit

Supplement 05

Ethane Product Summary

Component	CAS	Formula	Molecular Weight	Mole % (Vol %)	Mole Fraction	Weighted Sum	Weight %	lb/MMscf
Nitrogen	7727-37-9	N2	32.00	---	---	---	---	---
Hydrogen Sulfide	2148-87-8	H2S	34.08	0.00300	0.000030	0.0010	0.003	2.69
Carbon Dioxide	124-38-9	CO2	44.01	0.06970	0.000697	0.0307	0.100	80.83
Methane*	75-82-8	CH4	16.04	3.00000	0.030000	0.4813	1.565	1,268.24
Ethane*	74-84-0	C2H6	30.07	93.3273	0.933273	28.0626	91.225	73,949.81
Propane**	74-98-6	C3H8	44.10	1.00000	0.010000	0.4410	1.433	1,162.00
i-Butane**	75-28-5	C4H10	58.12	1.00000	0.010000	0.5812	1.889	1,531.62
n-Butane**	106-97-8	C4H10	58.12	1.00000	0.010000	0.5812	1.889	1,531.62
Cyclopentane**	287-92-3	C5H10	70.13	---	---	---	---	---
i-Pentane**	78-78-4	C5H12	72.15	---	---	---	---	---
n-Pentane**	109-66-0	C5H12	72.15	---	---	---	---	---
Cyclohexane**	110-82-7	C6H12	84.16	---	---	---	---	---
Other Hexanes**	varies	C6H14	86.18	---	---	---	---	---
Methylcyclohexane**	varies	C7H14	98.19	---	---	---	---	---
Heptanes**	varies	C7H16	100.20	---	---	---	---	---
C8+ Heavies**	varies	C8H18	114.5 est	---	---	---	---	---
Benzene***	71-43-2	C6H6	78.11	0.10000	0.001000	0.0781	0.254	205.84
Ethylbenzene***	100-41-4	C8H10	106.17	0.10000	0.001000	0.1062	0.345	279.76
n-Hexane***	110-54-3	C6H14	86.18	0.10000	0.001000	0.0862	0.280	227.09
Toluene***	108-88-3	C7H8	92.14	0.10000	0.001000	0.0921	0.300	242.80
2,2,4-TMP***	540-84-1	C8H18	114.23	0.10000	0.001000	0.1142	0.371	301.01
Xylenes***	1330-20-7	C8H10	106.17	0.10000	0.001000	0.1062	0.345	279.76
			Totals:	100.00	1.00	30.76	100.00	81,063
			Total THC:	99.93	1.00	30.73	99.90	80,980
			Total VOC:	3.60	0.04	2.19	7.11	5,761
			Total HAP:	0.60	0.006	0.58	1.90	1,536

* = Hydrocarbon (HC) ** = also Volatile Organic Compound (VOC) *** = also Hazardous Air Pollutant (HAP)

#UGC (Universal Gas Constant) = 379.482 scf/lb-mol @ 60 °F and 14.696 psia. Pound "X"/scf = M% of "X" * MW of "X" / UGC

To be conservative, and to account for potential future changes in the gas quality, the following "worst-case" values were assumed:

Component	CAS	Formula	Representative Gas Analysis			Worst-Case (120%)		
			Mole %	Wgt %	lb/MMscf	Mole %	Wgt %	lb/MMscf
Carbon Dioxide	124-38-9	CO2	0.070	0.100	81	0.086	0.123	100
Methane	75-82-8	CH4	3.000	1.565	1,268	3.785	1.974	1,600
Ethane	74-84-0	C2H6	93.327	91.225	73,950	100.00	97.751	79,240
VOC	Various	C3+	---	---	---	--	--	---
Benzene	71-43-2	C6H6	0.100	0.254	206	0.121	0.308	250
Ethylbenzene	110-54-3	C8H10	0.100	0.345	280	0.122	0.419	340
n-Hexane	100-41-4	C6H14	0.100	0.280	227	0.123	0.345	280
Toluene	108-88-3	C7H8	0.100	0.300	243	0.124	0.370	300
2,2,4-TMP	540-84-1	C8H18	0.100	0.371	301	0.123	0.456	370
Xylenes	1330-20-7	C8H10	0.100	0.345	280	0.122	0.419	340
Total HAP	Various	C6+	0.600	1.895	1536	0.734	2.319	1,880

Williams Ohio Valley Midstream LLC

OAK GROVE GAS PLANT

Application for 45CSR30 Title V Operating Permit

Supplement 05

Natural Gas Liquids (NGL) Summary

Component	CAS	Formula	Molecular Weight	Mole % (Vol %)	Mole Fraction	Weighted Sum	Weight %	lb/MMscf
Nitrogen	7727-37-9	N2	32.00	---	---	---	---	---
Hydrogen Sulfide	2148-87-8	H2S	34.08	---	---	---	---	---
Carbon Dioxide	124-38-9	CO2	44.01	---	---	---	---	---
Methane*	75-82-8	CH4	16.04	---	---	---	---	---
Ethane*	74-84-0	C2H6	30.07	--	---	---	---	---
Propane**	74-98-6	C3H8	44.10	70.71122	0.707112	31.1806	62.831	82,166.09
i-Butane**	75-28-5	C4H10	58.12	6.78617	0.067862	3.9443	7.948	10,393.83
n-Butane**	106-97-8	C4H10	58.12	15.12472	0.151247	8.7908	17.714	23,165.32
Cyclopentane**	287-92-3	C5H10	70.13	---	---	---	---	---
i-Pentane**	78-78-4	C5H12	72.15	2.49217	0.024922	1.7981	3.623	4,738.22
n-Pentane**	109-66-0	C5H12	72.15	2.73466	0.027347	1.9730	3.976	5,199.25
Cyclohexane**	110-82-7	C6H12	84.16	0.12995	0.001299	0.1094	0.220	288.19
Other Hexanes**	varies	C6H14	86.18	0.87017	0.008702	0.7499	1.511	1,976.04
Methylcyclohexane**	varies	C7H14	98.19	0.07193	0.000719	0.0706	0.142	186.12
Heptanes**	varies	C7H16	100.20	0.33299	0.003330	0.3337	0.672	879.25
C8+ Heavies**	varies	C8H18	114.5 est	0.10094	0.001009	0.1156	0.233	304.56
Benzene***	71-43-2	C6H6	78.11	0.00928	0.000093	0.0073	0.015	19.11
Ethylbenzene***	100-41-4	C8H10	106.17	0.00058	0.000006	0.0006	0.001	1.62
n-Hexane***	110-54-3	C6H14	86.18	0.60100	0.006010	0.5179	1.044	1,364.79
Toluene***	108-88-3	C7H8	92.14	0.01508	0.000151	0.0139	0.028	36.62
2,2,4-TMP***	540-84-1	C8H18	114.23	0.00058	0.000006	0.0007	0.001	1.75
Xylenes***	1330-20-7	C8H10	106.17	0.01856	0.000186	0.0197	0.040	51.93
Totals:				**100.00**	**1.00**	**49.63**	**100.00**	**130,773**
Total THC:				**100.00**	**1.00**	**49.63**	**100.00**	**130,773**
Total VOC:				**100.00**	**1.00**	**49.63**	**100.00**	**130,773**
Total HAP:				**0.65**	**0.006**	**0.56**	**1.13**	**1,476**

* = Hydrocarbon (HC) ** = also Volatile Organic Compound (VOC) *** = also Hazardous Air Pollutant (HAP)

#UGC (Universal Gas Constant) = 379.482 scf/lb-mol @ 60 °F and 14.696 psia. Pound "X"/scf = M% of "X" * MW of "X" / UGC

To be conservative, and to account for potential future changes in the gas quality, the following "worst-case" values were assumed:

Component	CAS	Formula	Representative Gas Analysis			Worst-Case (120%)		
			Mole %	Wgt %	lb/MMscf	Mole %	Wgt %	lb/MMscf
Carbon Dioxide	124-38-9	CO2	---	---	---	--	--	---
Methane	75-82-8	CH4	---	---	---	--	--	---
Ethane	74-84-0	C2H6	--	---	---	--	--	---
VOC	Various	C3+	100.000	100.000	130,773	100.000	100.000	130,800
Benzene	71-43-2	C6H6	0.009	0.015	19	0.015	0.023	30
Ethylbenzene	110-54-3	C8H10	0.001	0.001	2	0.004	0.008	10
n-Hexane	100-41-4	C6H14	0.601	1.044	1,365	0.722	1.254	1,640
Toluene	108-88-3	C7H8	0.015	0.028	37	0.021	0.038	50
2,2,4-TMP	540-84-1	C8H18	0.001	0.001	2	0.003	0.008	10
Xylenes	1330-20-7	C8H10	0.019	0.040	52	0.025	0.054	70
Total HAP	Various	C6+	0.645	1.129	1,476	0.791	1.384	1,810

Williams Ohio Valley Midstream LLC

OAK GROVE GAS PLANT

Application for 45CSR30 Title V Operating Permit

Supplement 05

Waste Gas Summary (Blended Streams Disposed in Flare (FL-1 (8E)))

Component	CAS	Formula	Molecular Weight	Mole % (Vol %)	Mole Fraction	Weighted Sum	Weight %	lb/MMscf
Nitrogen	7727-37-9	N2	32.00	0.07238	0.000724	0.0232	0.081	61.04
Hydrogen Sulfide	2148-87-8	H2S	34.08	---	---	---	---	---
Carbon Dioxide	124-38-9	CO2	44.01	0.08287	0.000829	0.0365	0.127	96.10
Methane*	75-82-8	CH4	16.04	18.71099	0.187114	3.0018	10.490	7,910.18
Ethane*	74-84-0	C2H6	30.07	76.82937	0.768312	23.1024	80.734	60,878.76
Propane**	74-98-6	C3H8	44.10	1.81819	0.018182	0.8018	2.802	2,112.78
i-Butane**	75-28-5	C4H10	58.12	0.89095	0.008910	0.5179	1.810	1,364.63
n-Butane**	106-97-8	C4H10	58.12	1.01082	0.010108	0.5875	2.053	1,548.22
Cyclopentane**	287-92-3	C5H10	70.13	---	---	---	---	---
i-Pentane**	78-78-4	C5H12	72.15	0.03582	0.000358	0.0258	0.090	68.11
n-Pentane**	109-66-0	C5H12	72.15	0.03931	0.000393	0.0284	0.099	74.74
Cyclohexane**	110-82-7	C6H12	84.16	0.00187	0.000019	0.0016	0.005	4.14
Other Hexanes**	varies	C6H14	86.18	0.01251	0.000125	0.0108	0.038	28.41
Methylcyclohexane**	varies	C7H14	98.19	0.00103	0.000010	0.0010	0.004	2.68
Heptanes**	varies	C7H16	100.20	0.00479	0.000048	0.0048	0.017	12.64
C8+ Heavies**	varies	C8H18	114.5 est	0.00145	0.000015	0.0017	0.006	4.38
Benzene***	71-43-2	C6H6	78.11	0.07947	0.000795	0.0621	0.217	163.59
Ethylbenzene***	100-41-4	C8H10	106.17	0.07935	0.000794	0.0842	0.294	221.99
n-Hexane***	110-54-3	C6H14	86.18	0.08798	0.000880	0.0758	0.265	199.79
Toluene***	108-88-3	C7H8	92.14	0.07956	0.000796	0.0733	0.256	193.17
2,2,4-TMP***	540-84-1	C8H18	114.23	0.07935	0.000794	0.0906	0.317	238.86
Xylenes***	1330-20-7	C8H10	106.17	0.07961	0.000796	0.0845	0.295	222.72
Totals:				**100.00**	**1.00**	**28.62**	**100.00**	**75,407**
Total THC:				**99.84**	**1.00**	**28.56**	**99.79**	**75,250**
Total VOC:				**4.30**	**0.04**	**2.45**	**8.57**	**6,461**
Total HAP:				**0.49**	**0.005**	**0.47**	**1.64**	**1,240**

* = Hydrocarbon (HC) ** = also Volatile Organic Compound (VOC) *** = also Hazardous Air Pollutant (HAP)

#UGC (Universal Gas Constant) = 379.482 scf/lb-mol @ 60 °F and 14.696 psia. Pound "X"/scf = M% of "X" * MW of "X" / UGC

To be conservative, and to account for potential future changes in the gas quality, the following "worst-case" values were assumed:

Component	CAS	Formula	Representative Gas Analysis			Worst-Case (120%)		
			Mole %	Wgt %	lb/MMscf	Mole %	Wgt %	lb/MMscf
Carbon Dioxide	124-38-9	CO2	0.083	0.127	96	0.129	0.199	150
Methane	75-82-8	CH4	18.711	10.490	7,910	22.472	12.598	9,500
Ethane	74-84-0	C2H6	76.829	80.734	60,879	92.253	96.941	73,100
VOC	Various	C3+	4.302	8.568	6,461	5.194	10.344	7,800
Benzene	71-43-2	C6H6	0.079	0.217	164	0.097	0.265	200
Ethylbenzene	110-54-3	C8H10	0.079	0.294	222	0.097	0.358	270
n-Hexane	100-41-4	C6H14	0.088	0.265	200	0.106	0.318	240
Toluene	108-88-3	C7H8	0.080	0.256	193	0.099	0.318	240
2,2,4-TMP	540-84-1	C8H18	0.079	0.317	239	0.096	0.385	290
Xylenes	1330-20-7	C8H10	0.080	0.295	223	0.097	0.358	270
Total HAP	Various	C6+	0.485	1.645	1,240	0.591	2.002	1,510

Waste Gas Summary (Blended Streams Disposed in Flare (FL-1 (8E)))

Waste Gas Btu Analysis (Blended Streams Disposed in Flare (FL-1 (8E)))

Component	Formula	Molecular Weight (MW)	Component Btu/scf		Inlet Gas		Residue Gas		Ethane Product		NGLs		Waste Gas	
					Flow: 92 MMscf/yr		Flow: 37 MMscf/yr		Flow: 500 MMscf/yr		Flow: 1 MMscf/yr		Flow: 630 MMscf/yr	
					Flow: 10,509 scf/hr		Flow: 4,225 scf/hr		Flow: 57,078 scf/hr		Flow: 128 scf/hr		Flow: 71,940 scf/hr	
					14.6%		5.9%		79.3%		0.2%		100.0%	
			LHV	HHV	Mole %	Btu/scf	Mole %	Btu/scf	Mole %	Btu/scf	Mole %	Btu/scf	Mole %	Btu/scf
Nitrogen	N2	28.013	—	—	0.4955	—	—	—	—	—	—	—	0.072	—
Hydrogen Sulfide	H2S	34.086	586.8	637.1	—	—	—	—	—	—	—	—	—	—
Carbon Dioxide	CO2	44.010	—	—	0.1887	—	—	—	0.070	—	—	—	0.083	—
Methane*	CH4	16.042	909.4	1,010.0	73.4443	741.787	95.3860	963.4	3.000	30.3	—	—	18.711	189.0
Ethane*	C2H6	30.069	1,618.7	1,769.7	17.2512	305.294	4.4760	79.2	93.327	1651.6	—	—	76.829	1359.6
Propane**	C3H8	44.096	2,314.9	2,516.2	6.0946	153.352	0.1420	3.6	1.000	25.2	70.711	1779.2	1.818	45.7
i-Butane**	C4H10	58.122	3,000.4	3,252.0	0.5849	19.021	—	—	1.000	32.5	6.786	220.7	0.891	29.0
n-Butane**	C4H10	58.122	3,010.8	3,262.4	1.3036	42.529	—	—	1.000	32.6	15.125	493.4	1.011	33.0
Cyclopentane**	C5H10	70.100	3,512.0	3,763.6	—	—	—	—	—	—	—	—	—	—
i-Pentane**	C5H12	72.149	3,699.0	4,000.9	0.2148	8.594	—	—	—	—	2.492	99.7	0.036	1.4
n-Pentane**	C5H12	72.149	3,706.9	4,008.7	0.2357	9.449	—	—	—	—	2.735	109.6	0.039	1.6
Cyclohexane**	C6H12	84.159	4,179.7	4,481.6	0.0112	0.502	—	—	—	—	0.130	5.8	0.002	0.1
Other Hexanes**	C6H14	86.175	4,394.8	4,746.9	0.0750	3.560	—	—	—	—	0.870	41.3	0.013	0.6
Methylcyclohexane**	C7H14	98.186	4,863.7	5,215.9	0.0062	0.323	—	—	—	—	0.072	3.8	0.001	0.1
Heptanes**	C7H16	100.202	5,100.0	5,502.5	0.0287	1.579	—	—	—	—	0.333	18.3	0.005	0.3
C8+ Heavies**	C8+	114.5 est	5,815 est	6,255 est	0.0087	0.544	—	—	—	—	0.101	6.3	0.001	0.1
Benzene***	C6H6	78.112	3,590.9	3,741.9	0.0008	0.030	—	—	0.100	3.7	0.009	0.3	0.079	2.97
Ethylbenzene***	C8H10	106.165	4,970.4	5,222.0	0.0001	0.003	—	—	0.100	5.2	0.001	0.0	0.079	4.1
n-Hexane***	C6H14	86.175	4,403.8	4,756.0	0.0518	2.464	—	—	0.100	4.8	0.601	28.6	0.088	4.2
Toluene***	C7H8	92.138	4,273.7	4,474.9	0.0013	0.058	—	—	0.100	4.5	0.015	0.7	0.080	3.56
2,2,4-TMP***	C8H18	114.229	5,778.8	6,231.6	0.0001	0.003	—	—	0.100	6.2	0.001	0.0	0.079	4.9
Xylenes***	C8H10	106.165	4,957.2	5,208.9	0.0016	0.083	—	—	0.100	5.2	0.019	1.0	0.080	4.1
					100.00		100.00		100.00		100.00		100.00	
				Btu/scf (HHV):		1,289		1,046		1,802		2,809		1,685
				LHV/HHV:		91.0%		90.1%		91.5%		90.7%		91.4%
				Btu/scf (LHV):		1,173		943		1,649		2,549		1,539
				MMBtu/hr (HHV):		13.55		4.42		102.85		0.36		121.22
				MMBtu/hr (LHV):		12.32		3.98		94.13		0.33		110.75

SUPPLEMENT 06

Vendor Data

---

§45-30-4.3.c.8 - The application forms shall include calculations or test data on which the information is based.

HEATER SPECIFICATIONS:

- TXP2 and TXP3 Regen Gas Heaters (H-03 (3E) and H-04 (4E))
- DeC2 Hot Oil Heaters (H-05 (5E) and H-06 (6E))

FLARE SPECIFICATIONS:

- Process Flare – Zeeco Process Flare (FL-01 (8E))

GENERATOR ENGINE SPECIFICATIONS:

- Olympian GenSet (EPA Certified)

AMINE PROCESS VENT:

- DOW ProComp Report – Amine Process Vent (De-Ethanizer) (V-01 (16E))

Zeeco USA LLC
Tulsa, Ok

Doc. No. 21914-601
Cover Page + 5

Client : Tulsa Heaters, Inc.
Item : Burner Data Sheets

P.O.: 014487
Zeeco S.O.: 21914

GLSF-14 Round Flame Free-Jet Burner with CMS Skid

FOR

Tulsa Heaters, Inc.

AT

Exterran and Marshall County, WV

THI Reference: J12-793

Burner Data Sheets

Rev	By	Date	Description
0	RDR	20-Dec-12	First Issue
1	RDR	25-Feb-13	Revised per Customer Comments

Burner Design Criteria

Customer:	**Tulsa Heaters Inc.**
End User:	**Exterran**
Jobsite:	**Marshall County, WV**
Heater Tag Number:	**H-711**
Type of Heater:	**SHO**
Burner Designation:	**GLSF**
Burner Description:	**Round Flame, "Free-Jet"**
Patent Info:	***US Patent # 6,499,990***

Revision Table

Rev #	Issue	Description of Revision		Rev Date	Name
1	3	Revised per Customer Comments		25-Feb-13	Ryan Roberts
0	2	Revised to Project S.O. 21914		20-Dec-12	Ryan Roberts
A	1	Original Issue.	6-Nov-12	Matt Roush	

Confidential Property of Zeeco. To be returned upon request and used only in reference to contracts or proposal of this company. Reproduction of this print or unauthorized use of this Document is prohibited.

GENERAL INFORMATION

Customer Name	Tulsa Heaters Inc.
End User Name	Exterran
Jobsite	Marshall County, WV

FURNACE DATA / SITE CONDITIONS

Furnace Tag Number	H-711	Plant Site Elevation Above Sea Level, ft	1215
Type of Furnace	SHO	Ambient Air Temperature (°F)	100
Refractory Thickness, in	5	Minimum Relative Humidity	0%
Heater Steel Thickness, in	0.25	Normal Relative Humidity	70%
Type of Draft	Forced	Maximum Relative Humidity	100%
Direction of Firing	Horizontal	Heater Height (to convective sec.), ft	21.1
Mounting Direction	Horizontal	Tube Circle Diameter (ft)	9.0
		Heater Length, ft	0.0

PROCESS DATA

	Gas		
Maximum Heat Release (MM BTU/hr)	18.200	Available Combustion Air dP (in H2O)	4.000
Normal Heat Release (MM BTU/hr)	14.560	Combustion Air Temperature (°F)	100
Minimum Heat Release (MM BTU/hr)	3.640	Furnace Temperature (°F)	1508
Turndown	5.00	Combustion Test	Required
Required Fuel Pressure for Burner (psig)	30		
Design Excess Air	15%		

GENERAL BURNER DESCRIPTION

Burner Model / Size	GLSF	14	Flame Shape	Round Flame
Burner Description	Round Flame, "Free-Jet"		Maximum Predicted Flame Length (ft)	17.0
Number Required		1	Maximum Predicted Flame Width (ft)	4.50
Oil Gun Model / Size			Pilot Model	JM-1S-E
Atomizing Media			Pilot Ignition Method	Electric Ignition
Atomizing Type			Pilot Heat release (Btu/hr)	90,000.00
Available Atomizing Pressure (psig)			Pilot Operating Pressure (psig)	10
Atomizing Media Rate (# / # fuel)			Pilot Fuel	Natural Gas
			Flame / Ionization Rod Provided	None

NOISE DATA (SINGLE BURNER BASIS)

Predicted @ 63 Hz (dB)	85	Predicted @ 2000 Hz (dB)	72
Predicted @ 125 Hz (dB)	89	Predicted @ 4000 Hz (dB)	74
Predicted @ 250 Hz (dB)	82	Predicted @ 8000 Hz (dB)	72
Predicted @ 500 Hz (dB)	86	Guar. Noise Level @ 3 ft from burner, dBa	85
Predicted @ 1000 Hz (dB)	76		

GENERAL BURNER COMMENTS

2-1. The above noise emissions are "Sound Pressure Level".

2-2. The above heat releases are based on the lower heating value 'LHV' of the fuel(s).

2-3. The burners are sized based on the maximum relative humidity case, as listed above.

Confidential Property of Zeeco. To be returned upon request and used only in reference to contracts or proposal of this company. Reproduction of this print or unauthorized use of this Document is prohibited.

FUEL GAS CHARACTERISTICS

OFF GAS CHARACTERISTICS

Composition	Design % vol	Rich Rjctn % vol							
		1							
CH4 (methane)	98.15%	83.28%							
C2H6 (ethane)	1.36%	15.67%							
C3H8 (propane)	0.02%	0.37%							
C4H10 (butane)									
C5H12 (pentane)									
C6H14 (hexane)									
C5H10 (cyclopen)									
C6H12 (cyclohex)									
C2H4 (ethene)									
C3H6 (propene)									
C4H8 (butene)									
C5H10 (pentene)									
C6H6 (benzene)									
C5H8 (isoprene)									
CO2		0.42%							
H2O									
O2									
N2	0.47%	0.26%							
SO2									
H2S									
CO									
NH3									
H2									
AR									
Total (vol%)	100%	100%							
Excess O2 (vol%)	3.00%	2.99%							
LHV (Btu/scf)	915	1020							
S.G.	0.57	0.64							
TEMP (°F)	70.00	70.00							
M.W.	16.47	18.65							

FUEL OIL CHARACTERISTICS

LHV (BTU/lb)
S.G. @ 60°F
TEMP (°F)
API GRAVITY @ 60°F
NITROGEN (wt%)
VANADIUM (PPM)
SULFUR (wt%)
CATALYST PRESENT
GENERAL OIL TYPE

Confidential Property of Zeeco. To be returned upon request and used only in reference to contracts or proposal of this company. Reproduction of this print or unauthorized use of this Document is prohibited.

BASIS OF EMISSIONS INFORMATION

				Rev.
Furnace Temperature (°F)	1,508			
Excess Combustion Air (%)	15% Gas			
Combustion Air Temperature (°F)	100			
Relative Humidity (%)	70%			
Heat Release for Guarantee (MM Btu/hr)	18.200	to	9.100 LHV	1

EMISSIONS INFORMATION

	PREDICTED		GUARANTEED	
	(ppmv)	(#/MMBtu)	(ppmv)	(#/MMBtu)
NOx Design	9	0.011	30	0.036
NOx Rich Rjctn	9	0.011	30	0.036
CO - Gas	0	0.000	50	0.040
UHC - Gas	1	0.001	15	0.007
Particulate - Gas	2	0.002	15	0.013
VOC - Gas	0	0.000	15	0.019

EMISSIONS COMMENTS

4-1 The above listed UHC emissions are based upon UHC being defined as free "methane" as the result of incomplete combustion due to the supplied combustion equipment as stated in these data sheets.

4-2 The above listed VOC emissions are based upon VOC being defined as free "propane" as the result of incomplete combustion due to the supplied combustion equipment as stated in these data sheets.

4-3 The above listed Particulate emissions are based upon Particulate being defined as free "ethane" as the result of incomplete combustion due to the supplied combustion equipment as stated in these data sheets. This excludes ash, sand and heavy metals in the fuel oil.

4-4 NOx guarantees are based on the furnace temperature, combustion air temperature, excess combustion air and the fuel gas compositions as specified the Zeeco Burner Data Sheets.

4-5 The emissions guarantees above are for operation between maximum and normal heat release.

4-6 The emissions guarantees as stated above are based upon operation with the % excess air, temperature, furnace temperature, and fuel temperatures as stated in these data sheets.

4-7 See Notes & Clarifications section for more information concerning noise emissions.

4-8 See Notes & Clarifications section for more information concerning the above emissions guarantees.

4-9 Zeeco takes exception to any SOx guarantees since SOx production is based upon the amount of Sulfur in the fuel stream and the equilibrium conditions in the furnace.

4-10 The above listed predictions & guarantees are based on the higher heating value 'HHV' of the fuel(s).

4-11 All ppmv and/or mg/Nm3 guarantees are corrected to 3% O2 dry basis.

4-12 All CO, UHC, Particulate and VOC emissions guarantees are based on the furnace local temperature at the burner being above 1100°F (593°C).

Confidential Property of Zeeco. To be returned upon request and used only in reference to contracts or proposal of this company. Reproduction of this print or unauthorized use of this Document is prohibited.

BASIS OF SCOPE OF SUPPLY

		Rev.
Burner Plenum	Burners are supplied with individual, manufactured plenums (windboxes).	
Plenum General Description	Integral, round-shaped air plenum, fabricated construction	
Material	A-1011 Gr 30 Carbon Steel	
Thickness	10 gauge (3.58 mm) material	
Internal Insulation / thickness	Not Required 0.00 (in)	
Method of Construction	Seal-Welded Construction	
Inlet Air Control	Burners are supplied with air control.	
Mode of Operation	Damper assembly, complete with self-locking handle & position indicator	
Tight Shutoff for Damper Blades	Seal strips not required, 10% air leakage with damper in closed position	
Mechanism Description	Opposed motion, dual carbon steel blades & 304 SS shafts, linked with a quarter gear system	
Bearing construction	Supplied with bearings c/w grease fittings for damper shafts	
Burner Tile	Burner is supplied with a refractory tile assembly.	
Regen Tile Composition	Not Applicable	
Secondary Tile Composition	60% Al2O3	
Needle Construction Required	Not Required	
Rated Service Temperature (°F)	3000	
Temperature of Pre-firing (°F)	500	
Noise Attenuation Method	Not Required	
Fuel Delivery System	Burners are supplied with a gas tip and manifold assembly, with a single point connection	
Gas manifold description	Manufactured pipe manifold, constructed from schedule 40 carbon steel pipe	
Gas Tip Material	310 or HK (ASTM A-297) stainless steel	
Gas Riser Material	1/4" (6.35 mm), schedule 40, 304 stainless steel pipe	
Separate Off Gas Manifold	Not Required	
Off Gas Tip Material	Not Required	
Off Gas Riser Material	Not Required	
Pilot Material	Carbon Steel and / or Cast Equivalent - 310 SS or Cast equivalent tip	
Fuel Gas / Off Gas / Pilot Gas Connections	150#, Carbon Steel Flange, RFWN, A-105	
Oil Tip / Atomizer Material	Not Applicable	
Oil & Steam Connections	Not Applicable	
Painting Requirements	Zeeco Standard	
Carbon Steel Surface Preparation	SSPC-SP-6 // NACE 3 // SA 2 - Commercial Blast	
Primer	Dimetcote 9, Inorganic Zinc Primer	
Primer Thickness	2-3 mils dft or 55-75 microns dft	
1st Paint Coat	Amercoat 385, Multi-purpose epoxy	
1st Paint Coat Thk.	4-6 mils dft or 100-150 microns dft	
Top Coat	Not required	
Top Coat Thickness	Not required	
Tile Case Assembly / Mounting Plate	Burners are supplied with a tile case assembly	
Mounting Template - heater floor cutout	Not Required	
Lifting Lugs	Not Required	
Pressure Taps Required for Windbox	Not Required	
Scanner Connection	1" NPT fixed connection, one (1) per burner	1
Ignition / Sight Ports	Two (2) ports provided, 2" (50.8 mm), c/w threaded cap & glass	
Electrical Information	Pilot Fittings and Ship Loose Items	
Pilot Conduit Fittings	Class I, Div. II, Group C & D	1
UV Scanners	By Zeeco	1

Confidential Property of Zeeco. To be returned upon request and used only in reference to contracts or proposal of this company. Reproduction of this print or unauthorized use of this Document is prohibited.

FIRED THERMAL FLUID HEATER SYSTEM PARAMETERS:

The recommendations in this proposal are based on the following parameters:

Heater capacity Normal (Duty):	**55,059,388 Btu/hr**
Thermal fluid circulation rate:	**1,870GPM (742,603 lbs/hr)**
Fluid temperature (Heater outlet):	**400 °F**
Fluid temperature (Heater inlet):	**275 °F**
Plant location:	Unknown
Plant elevation:	2000 fasl Maximum
Heater location:	Outdoor
Burner turndown:	10:1
Burner input required (HHV):	**68,327,472 Btu/hr**
Stack temperature with Economizer	476 °F
Heater orientation:	Horizontal
Heater efficiency:	89% (LHV)
Fuel:	Gas
Electrical:	460 V / 3 PH / 60 Hz
Controls:	NEMA 4
Insurance / code requirements:	NFPA Latest Edition / FM / ASME
Thermal fluid:	Therminol 55
Heater volume:	2,725 Gallons
Design of heater coil and expansion tank:	600 °F @ 150 PSIG w/ CA = .0626"

EQUIPMENT RECOMMENDATIONS:

Heater:

The heater will be a model HCI-25010-50(Q)-G two pass design for a duty of 55,059,388 Btu/hr to meet your process design conditions. The heater will include:

- Quad circuit 5" SA106 Gr. B seamless, 40 helical coil
- ASME section VIII stamp for 150 PSIG @ 600 °F with a CA = .0625"
- 10" - 300 # RFWN coil flanges on inlet and outlet.
- Coil hydrostatically tested per the ASME code
- Economizer to reduce stack temperature for the Low NOx Re-circulation Burner
- CompactLogix Profiler
- **Low NOx Burner Duct Work**
- National Board for pressure vessels registration
- A36 Carbon steel shell
- 3 - 5" thick high temperature ceramic fiber blanket insulation on heater shell and covers to provide an average skin temperature of 140-160 °F with an ambient temperature of 70 °F and 5 MPH wind.
- Rear cover peep sight
- Structural steel skid mounting
- 4 skid lifting lugs, 2 on top and 2 near the bottom of the heater shell
- Shell and structural steel will receive surface preparation to SSPC-SP10 and a surface coat of primer and one top coat.
- Stack, 8 ft. above top of heater

Burner

A forced draft Faber Low NOx burner is provided for natural gas combustion. The burner will be the modulation type for a 10:1 turndown. The pilot will be natural gas with the standard ignition procedures. Burner will require natural gas to the inlet of the fuel train. Estimated emissions: (Corrected to 3% O2) are as follows:

NOx - <30 PPMVD
CO – <50 PPMVD

Burner includes:

- Direct spark ignited natural gas pilot (Interruptible type)
- UV Flame detection scanner
- Ignition transformer
- Nameplate on burner stating the burner rated maximum input (HHV)

DESIGN NORMAL

HCl	IP UNITS	SI UNITS
Heater Capacity (Btu/hr) (MW)	55,059,388	16.14
Heater Circulation Rate (Lb/hr) (kg/hr)	742,603	336,751
Heater Circulation Rate (Gal/min) (m^3/hr)	1,870	425
Heater Inlet Temperature (°F) (°C)	275	135
Heater Outlet Temperature (°F) (°C)	400	204
Minimum Allowable Circulation Rate (Gal/min) (m^3/hr)	1,496	340
Input (HHV) (Btu/hr) (MW)	68,327,472	20.03
Stack Temperature (°F) (°C)	476	247
Calculated Heater Efficiency % LHV	89	89
Heater Calculated ΔP (psid) (kPa) (Clean)	10	68
Heater Volume (Gallons) (m^3)	2,725	10
Total Surface Area (ft^2) (m^2)	7,996	743
Overall Flux Rate (Btu/hr-ft^2) (kW/m^2)	6,886	22
Radiant Surface Area (ft^2) (m^2)	1,717	160
Average Radiant Flux Rate (Btu/hr-ft^2) (kW/m^2) AICHE	18,017	57
Maximum Radiant Flux Rate (Btu/hr-ft^2) (kW/m^2) AICHE	24,324	77
Maximum Metal Temperature (°F) (°C) AICHE	532	278
Maximum Film Temperature (°F) (°C) AICHE	511	266
Combustion Loading (Btu/hr-ft^3) (kW/m^3)	26,078	270
Average Flue Gas Velocity Across Insulation (ft/s) (m/s)	76	23
Average Therminol 55 Velocity (ft/s) (m/s)	8	2

% Output	Duty (Btu/Hr)	% Eff (LHV)	Stack Temp (F)
25.00	13,764,847	95	176
50.00	27,529,694	93	276
75.00	41,294,541	91	376
100.00	55,059,388	89	476

FABER BURNER COMPANY
#13011
BURNER DATA
Page 3 of 4

F. Gas Pilot Data:
Natural Gas at 1000 BTU/SCF & 0.6 S.G., 630 SCFH required at 1 PSIG at the pilot.

G. Turndown Data:
10:1 on Natural Gas
4:1 on Natural Gas (with emissions guarantee)

H. Excess Air Design Data:
15% on Natural Gas @ MCR

I. EMISSION GUARANTEES

Not to Exceed:	Natural Gas	
	Lbs/MMBTU	PPM
NOx	0.036	30
CO	0.037	50

Parts Per Million (PPM) @ 3% O2 Dry

EMISSION TEST CONDITIONS:

For a valid guarantee test, the following conditions must be met:

1. Emission guarantees are based upon the data in the design conditions above and are for the firing of natural gas only.
2. Guarantees are from 25% to 100% heater MCR (maximum continuous rating) only.
3. Heater meets (min.) construction requirements for furnace sidewall integrity and seals at the drums and front wall. CO emission stated above is provided furnace leakage (bypassing of flue gas) does not contribute more than .015 lb/MMBTU to the total CO emissions.
4. Fuel Quality:

   The fuel must not contain fuel bound nitrogen. The emission guarantee above is based upon fuel that doesn't contain fuel bound nitrogen.
5. FABER field service must do the initial burner adjustments and must be present during testing for optimization of the equipment supplied.
6. Emission testing must be conducted within the warranty period. Upon obtaining the guaranteed emissions, as described above, the equipment shall be considered accepted.

Oak Grove Gas Plant

URS

Flare

ITEM No.: 00-FS-018

QUANTITY REQUIRED: 1

Project No.: 30788-01

Data Sheet No.: OGGP-ME20-0001

Rev. No.: 1

PROCESS DESIGN CONDITIONS - PURCHASER

		Note	CASE 1	Rev	CASE 2	Rev	CASE 3	Rev
1	Design Flare Capacity, lb/hr		439,174		268,060		349,400	
2	Smokeless Capacity, lb/hr capacity	2	164,000		96,000		87,350	
3	Gas Temperature, deg F		-20		200		150	
4	Static Pressure at Flare Inlet, psig	3	15		~ 8 psig		~ 8 psig	
5	Flare Inlet Diameter, Inches		By Vendor		By Vendor		By Vendor	
6	Veq, SCFH air equivalent							
7	Heat Release, MMBTU/hr							
8	Duration @ Max. Rate, min							
9	Relief Source		200 MMSCFD Blowdown		Fire Scenario - TXP 1		Fire Scenario - 1 Deethanizer	
10	Controlling Case For . . .							
11	GAS COMPOSITION (Mole%)							
12	H2S		0.00		0.00		0.00	
13	CO2		0.00		0.00		0.00	
14	Nitrogen		0.00		0.00		0.00	
15	Methane		0.72		0.30		0.00	
16	Ethane		0.28		0.70		0.46	
17	Propane		0.00		0.00		0.36	
18	i-Butane		0.00		0.00		0.04	
19	n-Butane		0.00		0.00		0.08	
20	i-Pentane		0.00		0.00		0.02	
21	n-Pentane		0.00		0.00		0.02	
22	n-Hexane		0.00		0.00		0.02,	
23	n-Octane		0.00		0.00		0.00	
24	n-Nonane		0.00		0.00		0.00	
25	H2O		0.00		0.00		0.00	
47								
48	TOTAL (should be 100%)		1.00		1.00		1.00	
49	Molecular Weight		20		25.9		41.3	
50	Lower Heating Value, BTU/lb							
51	Ratio of Specific Heats, Cp/Cv							
52	Viscosity, cP							
53	UEL, % in air							
54	LEL, % in air							

CONFIDENTIAL AND PROPRIETARY
Copyright © 2012 URS Corporation - ALL RIGHTS RESERVED

$$\left(\frac{87{,}350\ lb}{hr}\right)\left(\frac{379.3\ scf}{lb\text{-}mol}\right)\left(\frac{lb\text{-}mol}{41.3\ lb}\right)\left(\frac{2406\ Btu,\ HHV}{scf}\right) = 1{,}930.15\ \frac{MMBtu}{hr}\ (HHV)$$

Air Assisted Flare Tip Specification Sheet

Client:	URS Energy	Zeeco Ref.:	SO21986	Date:	11-Apr-13
Location:	West Virginia	Client Ref.:	3078801-15-001	Rev.	1

General Information:

Tag No.:	Tip	
Model:	AFTA - 24/80	Type: Air Assisted
Length:	10'-0"	
Weight:	4000 lbs	
No. of Pilots:	3	

Design Case:

Governing Case:	Case 1
Molecular weight:	20.0
L. H. V. :	1,108 BTU/SCF
Temperature:	-20 Deg. F
Available Static Pressure:	15.0 psig
Design Flow Rate:	439,174 lbs/hr
Governing Smokeless Case:	Case 3
Design Smokeless Rate:	87,350 lbs/hr
Approximate Exit Velocity:	1196 ft/s
Mach No.:	1.00
Approx. Tip Press. Drop:	11.00 psig

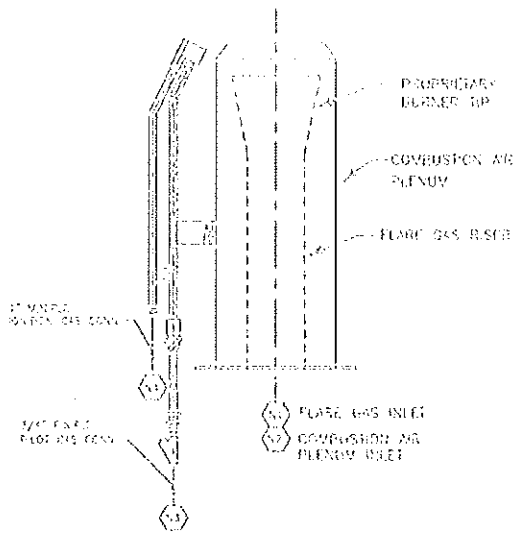

See Drawing SC-8522 for Details

Construction:

Upper Section:	310 SS	Windshield:	NO
Lower Section:	Carbon Steel	Flame retention Ring:	310 SS
Refractory:	None	Lifting Lugs:	0
Refractory Thk:	N/A		

Surface Finish (Carbon Steel Surfaces):

Surface Preparation:	SSPC-SP6	Primer:	Inorganic Zinc
Paint (c. s. surfaces):	High Heat Aluminum		

Connections:

	Qty.	Size	Type	Material
N1 - Flare Gas Inlet:	1	24"	Beveled ; Weld	LTCS
N2 - Combustion Air Inlet:	1	80"	Fab. Plate Flange	A36
N3 - Pilot Gas Manifold:	1	1"	150# RFSW	A105
N4 - Ignition Line:	3	1"	SW Union	304 SS

Miscellaneous Notes:

1. Includes Integral Purge Reducing Velocity Seal.
2. Required Fuel Gas Purge Rate = 870 SCFH.
3. Flare system is designed for 99% destruction efficiency or better.
4. Air Plenum - 310SS top section, A36 lower section
5. Gas Riser - A516-70N or equal

Flame Front Generator Specification Sheet

Client:	URS Energy	Zeeco Ref.:	SO21986	Date:	11-Apr-13
Location:	West Virginia	Client Ref.:	3078801-15-001	Rev.	1

General Information:

Tag No.:	FFG-1
Model No.:	LMC-3-T/S
Operation:	Manual/Automatic
No. of Pilots Ignited:	3
Area Classification:	Class 1, Div 2, Gr D

Fuel Gas Data:

Molecular Weight:	18.0
L. H. V.:	1,000 BTU/SCF
Temperature:	100 deg. F
Pressure:	15 psig

Utility Consumption:

Pilot Gas (Per Pilot):	65 SCFH
Pilot Gas (Total):	195 SCFH
Ignition Gas (Intermittent):	110 SCFH
Ignition Air (Intermittent):	1,100 SCFH
Power Available:	120 V, 1 Phase, 60 Hz (<600 VA)

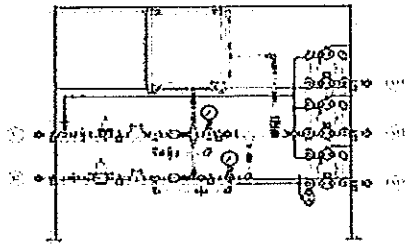

See Drawing WC-5090 for Details

Construction:

Ignition Line Piping:	Carbon Steel	Ignition Chamber:	Cast Iron
Fuel Gas Piping:	Carbon Steel	No. Thermocouples/Pilot:	1
Mounting Rack:	Carbon Steel	Thermocouple Type:	K
Enclosure:	NEMA 4X w/ Z-Purge	Propane Backup:	No
Sun / Rain Shield:	Yes	Ignition Air PCV:	Yes
Pilot Gas PCV:	Yes		

Surface Finish (Carbon Steel Surfaces):

Surface Preparation:	SSPC-SP1	Primer:	Red Oxide
Paint (c. s. surfaces):	Grey Enamel		

Connections:	Qty.	Size	Type	Material
N1 - Instrument Air Inlet:	1	1/2"	3000# Thrd. Union	Galvanized C.S.
N2 - Pilot Gas Inlet:	1	1/2"	3000# Thrd. Union	Carbon Steel
N3 - Ignition Gas Outlet:	3	1"	3000# Thrd. Union	Carbon Steel
Pilot Gas Out. (Not Shown):	1	1"	3000# Thrd. Union	Carbon Steel

Miscellaneous Notes:

1. FFG lines downstream of the FFG rack will be 304 SS.
2. Ignition panel includes AB Controllogix with Ethernet communication.
3. Several PLC inputs /outputs will be handled (passed through) the Zeeco PLC (Programs provided by URS)

OLYMPIAN™

G150LG2

6.8L

Industrial Spark-Ignited Generator Set

EPA Certified Stationary Emergency

G150LG2 150 kW

Standby Power Rating
150 kW 188 kVA 60 Hz

Prime Power Rating*
135 kW 169 kVA 60 Hz

*EPA Certified Prime ratings are not available in the U.S. or its Territories

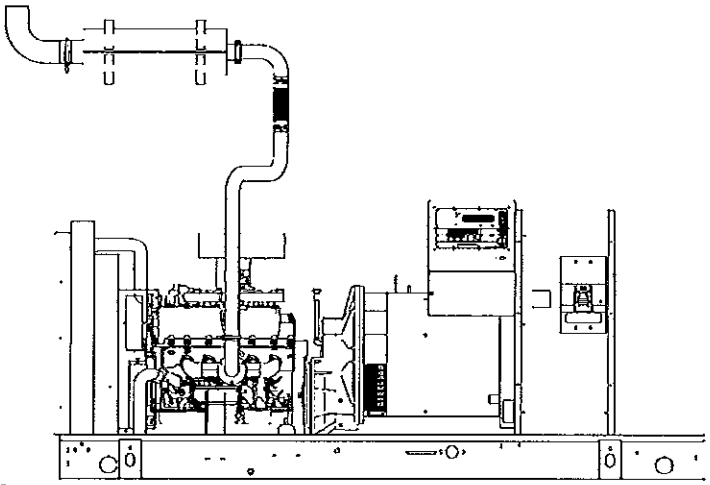

Image used for illustration purposes only

Codes and Standards

Olympian products are designed to the following standards:

UL2200, UL508, UL142, UL498

NFPA70, 99, 110, 37

NEC700, 701, 702, 708

ISO9001, 8528, 3046, 7637, Pluses #2b, 4

NEMA ICS10, MG1, 250, ICS6, AB1

ANSI C62.41
American National Standards Institute

IBC 2009, CBC 2010, IBC 2012, ASCE 7-05, ASCE 7-10, ICC-ES AC-156 (2012)

Prime power or standby service, Olympian Natural gas or Propane fuel generator sets deliver dependable, clean, economical power – even in the most demanding conditions – and Olympian gensets are available in a wide range of configurations with optional equipment.

Olympian generator sets are designed, engineered and manufactured for optimal performance. All major components are tested individually; once assembled, the entire unit is tested at and above 100% of rated load for safety and operation.

These complete, ready-to-run packages have another distinct advantage. They all come with the comprehensive service and support of Cat® dealers – beginning with prompt delivery and ongoing support throughout the life of the generator set.

G150LG2 150 kW

OLYMPIAN™

LG Series

Standard Features

ENGINE SYSTEM

General

- Oil Drain Extension
- Air Cleaner
- Fan Guard
- Stainless Steel flexible exhaust connection
- Critical Exhaust Silencer
- Factory Filled Oil
- Radiator duct adapter (open set only)

Fuel System

- Primary and Secondary Fuel Shutoff
- Flexible Fuel Line - NPT Connection

Cooling System

- Closed Coolant Recovery System
- UV/Ozone resistant hoses
- Factory-installed Radiator
- Radiator drain extension
- 50/50 Ethylene glycol antifreeze

Engine Electrical System

- Battery charging alternator
- Battery Cables
- Battery Tray
- Solenoid activated starter motor
- Rubber-booted engine electrical connections

ALTERNATOR SYSTEM

- Class H insulation material
- 2/3 Pitch
- Skewed Stator
- Brushless Excitation
- Sealed Bearings
- Amortisseur winding
- Full load capacity alternator

GENERATOR SET

- Internal Genset Vibration Isolation
- Separation of circuits - high/low voltage
- Separation of circuits - multiple breakers
- Wrapped Exhaust Piping
- Standard Factory Testing
- 2 Year Limited Warranty (Standby rated Units)
- 1 Year Warranty (Prime rated units)
- Silencer mounted in the discharge hood (enclosed only)

ENCLOSURE (If selected)

- Rust-proof fasteners with nylon washers to protect finish
- High performance sound-absorbing material
- Gasketed doors
- Stamped air-intake louvers
- Air discharge hoods for radiator-upward pointing
- Stainless steel lift off door hinges
- Stainless steel lockable handles

CONTROL SYSTEM

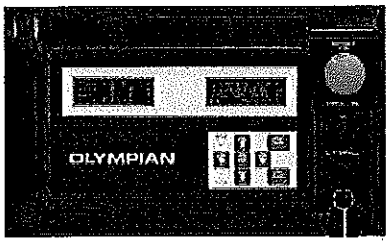

Control Panel

- Digital H Control Panel - Dual 4x20 Display
- Programmable Crank Limiter
- 7-Day Programmable Exerciser
- Special Applications Programmable PLC
- RS-232/485
- All-Phase Sensing DVR
- Full System Status
- Utility Monitoring
- Low Fuel Pressure Indication
- 2-Wire Start Compatible
- Power Output (kW)
- Power Factor
- kW Hours, Total & Last Run
- Real/Reactive/Apparent Power
- All Phase AC Voltage
- All Phase Currents
- Oil Pressure
- Coolant Temperature
- Coolant Level
- Engine Speed
- Battery Voltage
- Frequency
- Date/Time Fault History (Event Log)
- Isochronous Governor Control
- Waterproof/sealed Connectors
- Audible Alarms and Shutdowns
- Not In Auto (Flashing Light)
- Auto/Off/Manual Switch
- E-Stop (Red Mushroom-Type)
- NFPA110 Level I and II (Programmable)
- Customizable Alarms, Warnings, and Events
- Modbus protocol
- Predictive Maintenance algorithm
- Sealed Boards
- Password parameter adjustment protection
- Single point ground
- 15 channel data logging
- 0.2 msec high speed data logging
- Alarm information automatically comes up on the display

Alarms

- Oil Pressure (Pre-programmable Low Pressure Shutdown)
- Coolant Temperature (Pre-programmed High Temp Shutdown)
- Coolant Level (Pre-programmed Low Level Shutdown)
- Low Fuel Pressure Alarm
- Engine Speed (Pre-programmed Over speed Shutdown)
- Battery Voltage Warning
- Alarms & warnings time and date stamped
- Alarms & warnings for transient and steady state conditions
- Snap shots of key operation parameters during alarms & warnings
- Alarms and warnings spelled out (no alarm codes)

OLYMPIAN™

G150LG2 150 kW

LG Series

Configurable Options

ENGINE SYSTEM

General

- O Engine Block Heater
- O Oil Heater
- O Air Filter Restriction Indicator
- O Stone Guard (Open Set Only)
- O Critical Exhaust Silencer (Open Set Only / Standard on Ultra Low Emissions Option)

Engine Electrical System

- O 10A UL battery charger
- O 2.5A UL battery charger
- O Battery Warmer

ALTERNATOR SYSTEM

- O Alternator Upsizing
- O Anti-Condensation Heater
- O Tropical coating
- O Permanent Magnet Excitation

GENERATOR SET

- O Extended Factory Testing (3 Phase Only)
- O IBC Seismic Certification
- O 8 Position Load Center
- O 2 Year Extended Warranty
- O 5 Year Warranty
- O 5 Year Extended Warranty

CIRCUIT BREAKER OPTIONS

- O Main Line Circuit Breaker
- O 2nd Main Line Circuit Breaker
- O Shunt Trip and Auxiliary Contact
- O Electronic Trip Breakers

ENCLOSURE

- O Standard Enclosure
- O Level 1 Sound Attenuation
- O Level 2 Sound Attenuation
- O Steel Enclosure
- O Aluminum Enclosure
- O 150 MPH Wind Kit
- O 12 VDC Enclosure Lighting Kit
- O 120 VAC Enclosure Lighting Kit
- O AC/DC Enclosure Lighting Kit
- O Door Alarm Switch

CONTROL SYSTEM

- O 21-Light Remote Annunciator
- O Remote Relay Panel (8 or 16)
- O Oil Temperature Sender with Indication Alarm
- O Remote E-Stop (Break Glass-Type, Surface Mount)
- O Remote E-Stop (Red Mushroom-Type, Surface Mount)
- O Remote E-Stop (Red Mushroom-Type, Flush Mount)
- O Remote Communication - Modem
- O Remote Communication - Ethernet
- O 10A Run Relay
- O Ground fault indication and protection functions

Engineered Options

ENGINE SYSTEM

- O Coolant heater ball valves
- O Fluid containment pans

ALTERNATOR SYSTEM

- O 3rd Breaker Systems

GENERATOR SET

- O Special Testing
- O Battery Box

ENCLOSURE

- O Motorized Dampers
- O Enclosure Ambient Heaters

CONTROL SYSTEM

- O Spare Inputs (x4) / outputs (x4) - H Panel Only
- O Battery Disconnect Switch

Rating Definitions

Standby – Applicable for a varying emergency load for the duration of a utility power outage with no overload capability.
Prime – Applicable for supplying power to a varying load in lieu of utility for an unlimited amount of running time. A 10% overload capacity is available for 1 out of every 12 hours. The Prime Power option is only available on International applications.

Power ratings in accordance with ISO 8528-1, Second Edition dated 2005-06-01, definitions for Prime Power (PRP) and Emergency Standby Power (ESP).

G150LG2 150 kW

OLYMPIAN™

LG Series

application and engineering data

ENGINE SPECIFICATIONS

General

Cylinder #	10
Type	V
Displacement - L (Cu In)	6.8 (414.96)
Bore - mm (in)	90.17 (3.55)
Stroke - mm (in)	105.992 (4.17)
Compression Ratio	9:01
Intake Air Method	Naturally Aspirated
Number of Main Bearings	7
Connecting Rods	Forged
Cylinder Head	Aluminum
Cylinder Liners	No
Ignition	High Energy
Pistons	Aluminum Alloy
Crankshaft	Steel
Lifter Type	Overhead Cam
Intake Valve Material	Steel Alloy
Exhaust Valve Material	Steel Alloy
Hardened Valve Seats	Yes

Engine Governing

Governor	Electronic
Frequency Regulation (Steady State)	+/- 0.25%

Lubrication System

Oil Pump Type	Gear
Oil Filter Type	Full-flow spin-on cartridge
Crankcase Capacity - L (qts)	5.7 (6)

Cooling System

Cooling System Type	Pressurized Closed Recovery
Water Pump Flow - gpm (lpm)	38 (144)
Fan Type	Pusher
Fan Speed (rpm)	3600
Fan Diameter mm (in)	558 (22)
Coolant Heater Wattage	1500
Coolant Heater Standard Voltage	120 V

Fuel System

Fuel Type	Natural Gas, Propane Vapor
Carburetor	Down Draft
Secondary Fuel Regulator	Standard
Fuel Shut Off Solenoid	Standard
Operating Fuel Pressure (Standard)	11" - 14" H_2O
Operating Fuel Pressure (Optional)	7" - 14" H_2O

Engine Electrical System

System Voltage	12 VDC
Battery Charging Alternator	Standard
Battery Size	See Battery Index 0161970SBY
Battery Voltage	12 VDC
Ground Polarity	Negative

ALTERNATOR SPECIFICATIONS

Standard Model	390
Poles	4
Field Type	Revolving
Insulation Class - Rotor	H
Insulation Class - Stator	H
Total Harmonic Distortion	<5%
Telephone Interference Factor (TIF)	<50
Standard Excitation	Brushless
Bearings	Sealed Ball
Coupling	Direct via Flexible Disc
Prototype Short Circuit Test	Yes

Voltage Regulator Type	Full Digital
Number of Sensed Phases	All
Regulation Accuracy (Steady State)	+/- 0.25%

OLYMPIAN™

G150LG2 150 kW

LG Series

operating data

POWER RATINGS

	Natural Gas		Propane Vapor	
Single-Phase 120/240 VAC @1.0pf	136 kW	Amps: 567	144 kW	Amps: 600
Three-Phase 120/208 VAC @0.8pf	142 kW	Amps: 493	150 kW	Amps: 520
Three-Phase 120/240 VAC @0.8pf	142 kW	Amps: 427	150 kW	Amps: 451
Three-Phase 277/480 VAC @0.8pf	142 kW	Amps: 214	150 kW	Amps: 226
Three-Phase 346/600 VAC @0.8pf	142 kW	Amps: 171	150 kW	Amps: 180

STARTING CAPABILITIES (sKVA)

sKVA vs. Voltage Dip

		480 VAC						208/240 VAC					
Alternator	kW	10%	15%	20%	25%	30%	35%	10%	15%	20%	25%	30%	35%
Standard	150	133	199	265	332	398	464	100	149	199	249	299	348
Upsize 1	200	187	280	373	467	560	653	140	210	280	350	420	490

FUEL CONSUMPTION RATES*

Natural Gas – ft³/hr (m³/hr)	
Percent Load	Standby
25%	700 (19.8)
50%	1154 (32.7)
75%	1525 (43.2)
100%	2061 (58.4)

Propane Vapor – ft³/hr (m³/hr)	
Percent Load	Standby
25%	290 (8.2)
50%	476 (13.5)
75%	631 (17.9)
100%	853 (24.2)

*Fuel supply installation must accommodate fuel consumption rates at 100% load.

COOLING

		Standby
Air Flow (inlet air combustion and radiator)	ft³/min (m³/min)	6447 (182.6)
Coolant Flow per Minute	gpm (lpm)	57 (215.8)
Coolant System Capacity	gal (L)	6.3 (23.9)
Heat Rejection to Coolant	BTU/hr	577,060
Max. Operating Air Temp on Radiator	°F (°C)	122 (50)
Maximum Radiator Backpressure	In H_2O	0.5

COMBUSTION AIR REQUIREMENTS

		Standby
Flow at Rated Power	cfm (m3/min)	447 (12.7)

ENGINE

		Standby
Rated Engine Speed	rpm	3600
Horsepower at Rated KW**	hp	224
Piston Speed	ft/min (m/min)	2502 (762)
BMEP	psi	127

** Refer to "Emissions Data Sheet" for maximum bhp for EPA and SCAQMD permitting purposes.

EXHAUST

		Standby
Exhaust Flow (Rated Output)	cfm (m³/min)	1507 (42.7)
Maximum Recommended Back Pressure	InHg	1.5
Exhaust Temp (Rated Output)	°F (°C)	1550 (843)
Exhaust Outlet Size (Open Set)	In	2.5" I.D. Flex (No muffler)

Deration – Operational characteristics consider maximum ambient conditions. Derate factors may apply under atypical site conditions. Please consult a CAT® Dealer for additional details. All performance ratings in accordance with ISO3046, BS5514, ISO8528 and DIN6271 standards.

G150LG2 150 kW

OLYMPIAN™

LG Series

dimensions, weights, and sound levels

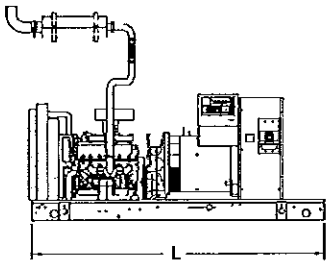

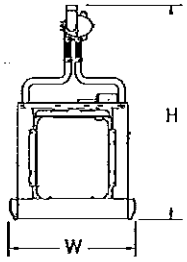

OPEN SET (Includes Exhaust Flex)

L x W x H in (mm)	128.1 (3252.8) x 49.2 (1248.6) x 84.3 (2141.6)
Weight lbs (kg)	2940 (1333)
Sound Level (dBA*)	89

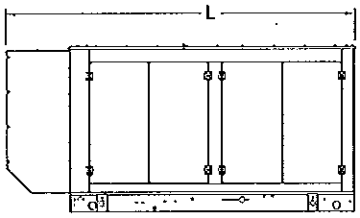

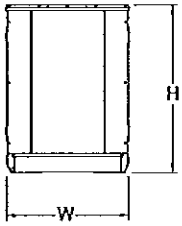

STANDARD ENCLOSURE

L x W x H in (mm)	143 (3632.9) x 50.4 (1280.1) x 68.2 (1731.5)
Weight lbs (kg)	Steel: 3970 (1719) Aluminum: 3220 (1460)
Sound Level (dBA*)	88

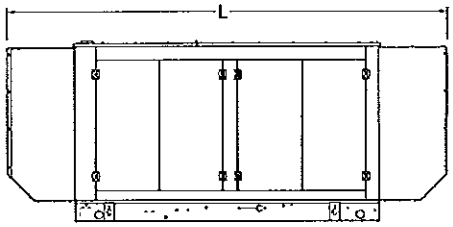

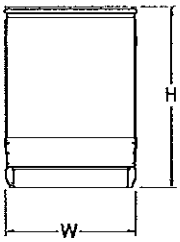

LEVEL 1 ACOUSTIC ENCLOSURE

L x W x H in (mm)	168.5 (4279.3) x 50.4 (1280.1) x 68.2 (1731.5)
Weight lbs (kg)	Steel: 3990 (1809) Aluminum: 3287 (1490)
Sound Level (dBA*)	85

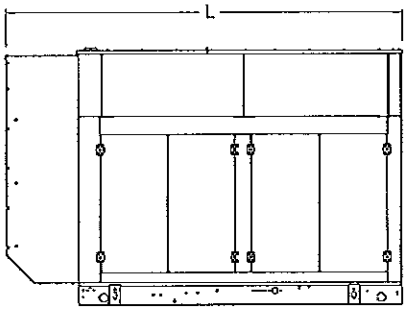

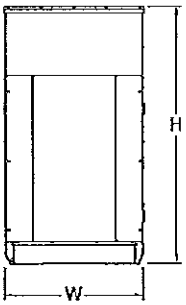

LEVEL 2 ACOUSTIC ENCLOSURE

L x W x H in (mm)	143 (3632.9) x 50.4 (1280.1) x 91.77 (2329.8)
Weight lbs (kg)	Steel: 4190 (1900) Aluminum: 3353 (1520)
Sound Level (dBA*)	78

*All measurements are approximate and for estimation purposes only. Sound levels measured at 23 ft (7 m) and does not account for ambient site conditions.

Information contained in this publication may be considered confidential. Discretion is recommended when distributing.
Materials and specifications are subject to change without notice.
CAT, CATERPILLAR, their respective logos, OLYMPIAN, "Caterpillar Yellow", the "Power Edge" trade dress as well as corporate and product identity used herein, are trademarks of Caterpillar and may not be used without permission.

www.OlympianPower.com
OK4289Y09-E 04/22/14
© 2014 Caterpillar
All rights reserved.
Printed in U.S.A.

Oil & Gas

Dow Confidential

ProComp Report

Williams Oak Grove Deethanizer -- Amine Process Vent

Tracking Number:	263EUS1113
Customer:	Williams Northeast G&P
Plant/Project:	Oak Grove Deethanizer
Location:	Pittsburgh, PA
Technical Contact:	Jim Hill
Sales Contact:	Eddy Garcia-Reameau
Customer Contact:	Michael Franklin
Customer Phone No.:	412-787-4778
Customer E-mail Address:	mike.franklin@williams.com
Project Number:	

Notes:
UCARSOL AP-814 for deep CO2 removal - ethane stream
Circ rate: 75 gpm to absorber
Reboiler duty: 3.7 MMBtu/hr
Absorber: 20 trays

The Dow Chemical Company assumes no obligation or liability resulting from the use of this information.
No warranty, expressed or implied, is given nor is freedom from any patent owned by Dow or others to be inferred.
Equipment sizes are estimated and should be confirmed by normal rigorous engineering methods.

Purchase of UCARSOL™ or SELEXOL™ solvent from The Dow Chemical Company will require executing a Non-Analysis/Non-Disclosure Agreement.

™ Trademark of The Dow Chemical Company ("Dow") or an affiliate of Dow.

* Trademark of The Dow Chemical Company

Oil & Gas

Dow Confidential

Contents

Williams Oak Grove Deethanizer -- Amine Process Vent

Coverpage	1
Contents	2
Simulation Summary	3
Inlet Streams	3
Outlet Streams	3
Global Data	3
Pumps, Compressors, Turbines, Expanders	3
Heat Exchangers	4
Absorber (COLUMN)	4
Regenerator (COLUMN)	4
Stream Table	5
Make-up Stream(s)	6
Process Flow Diagram	7
Major Equipment Summary	8
P-1 (PUMP)	8
P-2 (PUMP)	8
Lean Cooler (HEATER)	8
HXLR (HTXR)	8
Flash Drum (FLASH)	9
Absorber (COLUMN)	9
Regenerator (COLUMN)	10

Copyright © 2002 - 2012, The Dow Chemical Company

Oil & Gas

Dow Confidential

Simulation Summary

Williams Oak Grove Deethanizer -- Amine Process Vent

Inlet Streams

STREAM-ID		1
Stream Name		Feed Gas
Inlet Block		Feed Gas
Temperature	deg F	115.0000
Pressure	Psi (g)	645.0000
Vapor Fraction (mol/mol)	-	1.0000
Flowrate	lb/hr	2.1472E+05
Volume Flow (Liquid)	USgal/min	
Volume Flow (Vapor)	MMSCFD @60F	65.4600
Water	mass %	0.0000
Carbon Dioxide	mass %	0.8839
Nitrogen	mass %	0.0000
Methane	mass %	1.2889
Ethane	mass %	97.2367
Propane	mass %	0.5905
TOTAL	mass %	100.0000

Outlet Streams

STREAM-ID		2	5	9
Stream Name		Treated Gas	Flash Gas	
Outlet Block		Treated Gas	Flash Gas	Acid Gas
Temperature	deg F	125.3454	116.0635	120.0000
Pressure	Psi (g)	642.4893	75.0000	6.4336
Vapor Fraction (mol/mol)	-	1.0000	1.0000	1.0000
Flowrate	lb/hr	2.1313E+05	40.6516	1973.4357
Volume Flow (Liquid)	USgal/min			
Volume Flow (Vapor)	MMSCFD @60F	65.2285	1.2448E-02	0.4305
Water	mass %	0.1622	0.8945	3.5978
Carbon Dioxide	mass %	1.8544E-03	1.2709	95.9423
Nitrogen	mass %	0.0000	0.0000	0.0000
Methane	mass %	1.2983	1.2035	3.4323E-03
Ethane	mass %	97.9399	96.1749	0.4541
Propane	mass %	0.5948	0.4559	2.2814E-03
TOTAL	mass %	100.0000	100.0000	100.0000

Global Data

Atmospheric Pressure:	14.0700 Psi
Standard Temperature:	60.0000 deg F

Pumps, Compressors, Turbines, Expanders

P-1 (PUMP) Power:	2.8768 HP
P-2 (PUMP) Power:	35.6236 HP

Copyright © 2002 - 2012, The Dow Chemical Company

Oil & Gas

Dow Confidential

Heat Exchangers

Lean Cooler (HEATER) Duty:	-0.9990 MMBtu/hr
HXLR (HTXR) Duty:	3.4770 MMBtu/hr
Flash Drum (FLASH) Duty:	0.0000 MMBtu/hr
Regenerator (CONDENSER) Duty:	-0.7372 MMBtu/hr
Regenerator (REBOILER) Duty:	3.7000 MMBtu/hr

Absorber (COLUMN)

Lean Solvent Stream ID: Amine	3 (Cool Lean 2)
Temperature:	121.6849 deg F
Flowrate:	3.7916E+04 lb/hr
Solvent Strength:	45.0003 %-mass/mass
Acid Gas Loading:	2.1651E-02 mol/mol
Rich Solvent Stream ID:	4 (Cold Rich)
Acid Gas Loading:	0.3045 mol/mol

Regenerator (COLUMN)

Rich Solvent Stream ID: Amine	8
Temperature:	203.3424 deg F
Flowrate:	3.9466E+04 lb/hr
Solvent Strength: Amine	45.4068 %-mass/mass
Acid Gas Loading:	0.3045 mol/mol
Lean Solvent Stream ID: Amine	10 (Hot Lean 1)
Acid Gas Loading:	2.1661E-02 mol/mol
Reboiler Pressure:	13.0000 Psi (g)
Reflux Flowrate:	654.9449 lb/hr

Copyright © 2002 - 2012, The Dow Chemical Company

Oil & Gas

Dow Confidential

Stream Table - Williams Oak Grove Deethanizer -- Amine Process Vent

STREAM-ID		1	2	3	4	5	6	7	8	9	10	11
Stream Name		Feed Gas	Treated Gas	Cool Lean 2	Cold Rich	Flash Gas	Flashed Rich				Hot Lean 1	Hot Lean 2
Inlet/Outlet Block		Feed Gas	Treated Gas			Flash Gas				Acid Gas		
Temperature	deg F	115.0000	125.3454	121.6849	115.5961	116.0635	116.0635	205.0000	203.3424	120.0000	250.9129	251.0687
Pressure	Psi (g)	645.0000	642.4893	660.0000	645.0000	75.0000	75.0000	70.0000	15.0000	6.4336	13.0000	60.0000
Vapor Fraction (mol/mol)	-	1.0000	1.0000	0.0000	0.0000	1.0000	0.0000	1.4003E-04	2.3420E-03	1.0000	0.0000	0.0000
Flowrate	lb/hr	2.1472E+05	2.1313E+05	3.7916E+04	3.9507E+04	40.6516	3.9466E+04	3.9466E+04	3.9466E+04	1973.4357	3.7493E+04	3.7493E+04
Volume Flow (Liquid)	USgal/min			75.0521	73.4523		73.3004				78.6960	78.6951
Volume Flow (Vapor)	MMSCFD @60F	65.4600	65.2285			1.2448E-02				0.4305		
Enthalpy	Btu/lb	-1259.5999	-1236.2721	-4394.0301	-4393.6695	-1269.7465	-4396.8873	-4308.7698	-4308.7698	-3893.3966	-4251.6145	-4251.4193
Heat Capacity	Btu/lb-R	0.7388	0.6935	0.9107	0.9835	0.4520	1.0085			0.2187	0.9142	0.9141
Density	lb/ft3	4.8214	4.4881	62.9847	67.0563	0.4450	67.1262	62.4986	28.7291	0.1384	59.3981	59.3988
Viscosity	cP	1.0058E-02	1.0203E-02	3.8715	4.5985	1.0125E-02	4.5607			1.5909E-02	0.7759	0.7749
Ucarsol AP-814 (dry)	mass %			44.8282	43.0068		43.0511				45.3166	45.3166
Carbon Dioxide	loading			2.1651E-02	0.3045		0.3045				2.1661E-02	2.1661E-02
Water	lbmol/hr	0.0000	19.1873	1153.1299	1133.9427	2.0184E-02	1133.9225	1133.9225	1133.9225	3.9411	1130.0109	1130.0109
Carbon Dioxide	lbmol/hr	43.1264	8.9806E-02	3.2954	46.3310	1.1739E-02	46.3193	46.3193	46.3193	43.0213	3.2955	3.2955
Nitrogen	lbmol/hr	0.0000	0.0000	0.0000	0.0000	0.0000	0.0000	0.0000	0.0000	0.0000	0.0000	0.0000
Methane	lbmol/hr	172.5058	172.4710	0.0000	3.4719E-02	3.0497E-02	4.2221E-03	4.2221E-03	4.2221E-03	4.2220E-03	0.0000	0.0000
Ethane	lbmol/hr	6943.3567	6941.7585	0.0000	1.5982	1.3002	0.2980	0.2980	0.2980	0.2980	0.0000	0.0000
Propane	lbmol/hr	28.7510	28.7457	1.0433E-16	5.2234E-03	4.2024E-03	1.0209E-03	1.0209E-03	1.0209E-03	1.0209E-03	1.0332E-16	1.0332E-16
TOTAL	lbmol/hr	7187.7398	7162.3239	1308.6337	1334.0486	1.3668	1332.6818	1332.6818	1332.6818	47.2657	1285.4433	1285.4433
Water	mass %	0.0000	0.1622	54.7893	51.7084	0.8945	51.7608	51.7608	51.7608	3.5978	54.2966	54.2966
Carbon Dioxide	mass %	0.8839	1.8544E-03	0.3825	5.1612	1.2709	5.1652	5.1652	5.1652	95.9423	0.3868	0.3868
Nitrogen	mass %	0.0000	0.0000	0.0000	0.0000	0.0000	0.0000	0.0000	0.0000	0.0000	0.0000	0.0000
Methane	mass %	1.2889	1.2983	0.0000	1.4098E-03	1.2035	1.7163E-04	1.7163E-04	1.7163E-04	3.4323E-03	0.0000	0.0000
Ethane	mass %	97.2367	97.9399	0.0000	0.1216	96.1749	2.2706E-02	2.2706E-02	2.2706E-02	0.4541	0.0000	0.0000
Propane	mass %	0.5905	0.5948	1.2134E-17	5.8302E-04	0.4559	1.1407E-04	1.1407E-04	1.1407E-04	2.2814E-03	1.2151E-17	1.2151E-17
TOTAL	mass %	100.0000	100.0000	100.0000	100.0000	100.0000	100.0000	100.0000	100.0000	100.0000	100.0000	100.0000

Copyright © 2002 - 2012, The Dow Chemical Company

Oil & Gas

Dow Confidential

Stream Table - Williams Oak Grove Deethanizer -- Amine Process Vent

STREAM-ID		12	13	14	31	32	33	34
Stream Name			Warm Lean 2	Cool Lean 1	Lean	Steam	OHD	Reflux
Inlet/Outlet Block								
Temperature	deg F	148.9486	148.9486	120.0000	247.4663	250.9129	208.8922	120.0000
Pressure	Psi (g)	55.0000	55.0000	50.0000	12.0000	13.0000	9.4336	6.4336
Vapor Fraction (mol/mol)	-	0.0000	0.0000	0.0000	0.0000	1.0000	1.0000	0.0000
Flowrate	lb/hr	3.7493E+04	3.7916E+04	3.7916E+04	4.1288E+04	3795.1080	2628.3806	654.9449
Volume Flow (Liquid)	USgal/min	75.0409	75.8995	75.0849	86.3465			1.3231
Volume Flow (Vapor)	MMSCFD @60F					1.8610	0.7606	
Enthalpy	Btu/lb	-4344.1737	-4370.0692	-4396.4212	-4461.2429	-5557.1130	-4328.4240	-6764.9571
Heat Capacity	Btu/lb-R	0.9067	0.9083	0.9123	0.9262	0.4531	0.2858	0.9985
Density	lb/ft3	62.2913	62.2815	62.9572	59.6150	5.6815E-02	0.1038	61.7166
Viscosity	cP	2.5528	2.4950	3.9866	0.7068	1.3176E-02	1.6784E-02	0.5548
Ucarsol AP-814 (dry)	mass %	45.3166	44.8281	44.8282	41.2877			0.2837
Carbon Dioxide	loading	2.1661E-02	2.1651E-02	2.1651E-02	3.8809E-02			0.9386
Water	lbmol/hr	1130.0109	1153.1301	1153.1299	1331.1116	201.1008	40.1525	36.2114
Carbon Dioxide	lbmol/hr	3.2955	3.2955	3.2954	5.9280	2.6325	43.0379	1.6524E-02
Nitrogen	lbmol/hr	0.0000	0.0000	0.0000	0.0000	0.0000	0.0000	0.0000
Methane	lbmol/hr	0.0000	0.0000	0.0000	0.0000	0.0000	4.2221E-03	8.1177E-08
Ethane	lbmol/hr	0.0000	0.0000	0.0000	0.0000	0.0000	0.2980	6.6030E-05
Propane	lbmol/hr	1.0332E-16	1.0332E-16	1.0433E-16	9.0330E-14	9.0227E-14	1.0209E-03	1.9649E-08
TOTAL	lbmol/hr	1285.4433	1308.6340	1308.6337	1489.7889	204.3457	83.5113	36.2455
Water	mass %	54.2966	54.7893	54.7893	58.0804	95.4621	27.5211	99.6052
Carbon Dioxide	mass %	0.3868	0.3825	0.3825	0.6319	3.0527	72.0629	0.1110
Nitrogen	mass %	0.0000	0.0000	0.0000	0.0000	0.0000	0.0000	0.0000
Methane	mass %	0.0000	0.0000	0.0000	0.0000	0.0000	2.5771E-03	1.9884E-07
Ethane	mass %	0.0000	0.0000	0.0000	0.0000	0.0000	0.3409	3.0315E-05
Propane	mass %	1.2151E-17	1.2016E-17	1.2134E-17	9.6474E-15	1.0483E-13	1.7129E-03	1.3230E-07
TOTAL	mass %	100.0000	100.0000	100.0000	100.0000	100.0000	100.0000	100.0000

Make-up Stream(s)

Total losses (vaporization plus operating) of formulated solvent species from a well operated plant are approximately 0.6 lb/MMSCF of gas processed.
Based on 65.46 MMSCFD of treated gas, the total solvent species losses are estimated to be 1.6365 lb/hr.
Water loss from this design is expected to be 416.4994 lb/hr.

Copyright © 2002 - 2012, The Dow Chemical Company

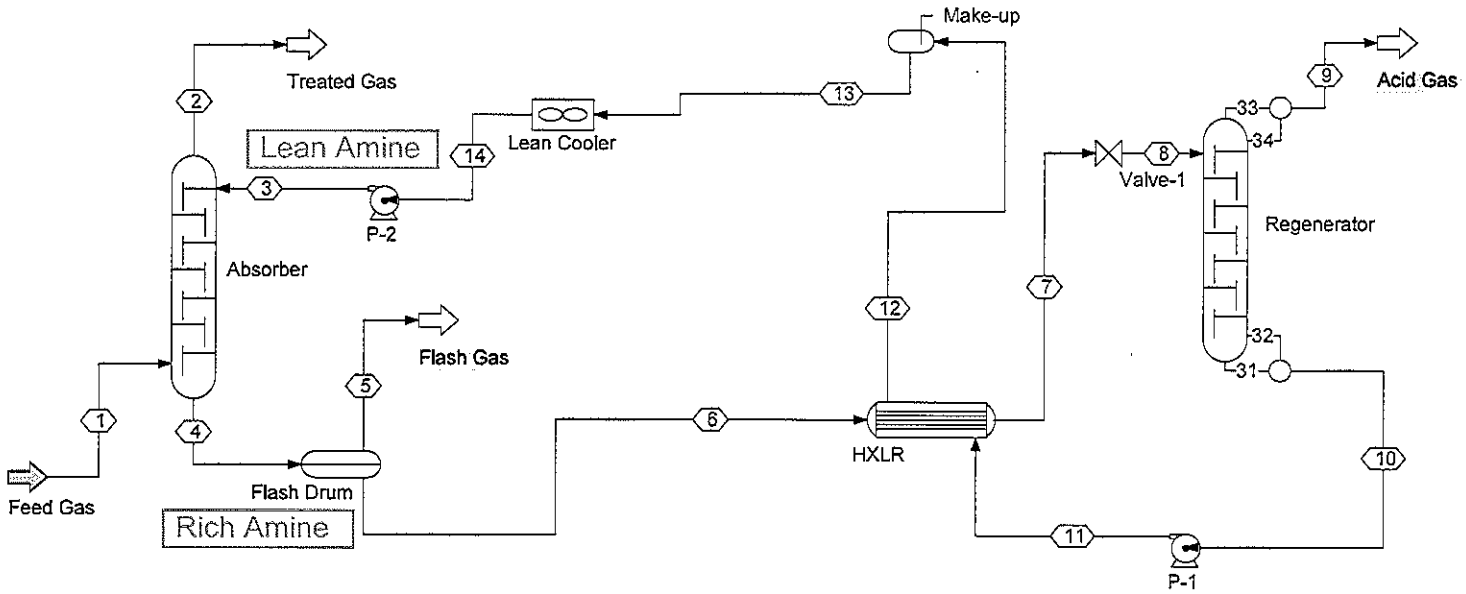

Dow Confidential

Oil & Gas

Process Flow Diagram
Williams Oak Grove Deethanizer

The Dow Chemical Company
Gas Treating Products & Services

ProComp 8.2.0.1_#6 / U096913

15 Nov 2013, Page 7/11

Oil & Gas

Dow Confidential

Major Equipment Summary
Williams Oak Grove Deethanizer

P-1 (PUMP)

Inlet Pressure:	13.0000 Psi (g)
Outlet Pressure:	60.0000 Psi (g)
Pressure Rise:	47.0000 Psi
Flowrate:	3.7493E+04 lb/hr
Efficiency:	75 %
Power:	2.8768 HP

P-2 (PUMP)

Inlet Pressure:	50.0000 Psi (g)
Outlet Pressure:	660.0000 Psi (g)
Pressure Rise:	610.0000 Psi
Flowrate:	3.7916E+04 lb/hr
Efficiency:	75 %
Power:	35.6236 HP

Lean Cooler (HEATER)

Inlet Temperature:	148.9492 deg F
Outlet Temperature:	120.0000 deg F
Pressure Drop:	5.0000 Psi
Heat Duty:	-0.9990 MMBtu/hr

HXLR (HTXR)

Performance Stream Number:	7
Inlet Temperature:	116.0635 deg F
Outlet Temperature:	205.0000 deg F
Pressure Drop:	5.0000 Psi
Free Stream Number:	12
Inlet Temperature:	251.0687 deg F
Outlet Temperature:	148.9486 deg F
Pressure Drop:	5.0000 Psi
Flowtype:	Counter-Current
Heat Duty:	3.4770 MMBtu/hr
LMTD:	39.1073 deg F
Area:	808.2477 ft2
Heat Transfer Coefficient:	110.0000 Btu/hr-ft2-F

Copyright © 2002 - 2012, The Dow Chemical Company

Oil & Gas

Dow Confidential

Flash Drum (FLASH)

Flash Type:	QP
Inlet Temperature:	115.5961 deg F
Outlet Temperature:	116.0635 deg F
Outlet Pressure:	75.0000 Psi (g)
Heat Duty:	0.0000 Btu/hr
Vapor fraction (mol/mol):	1.0245E-03 -
Residence Time:	10.0000 minutes
Drum Diameter:	4.1465 ft
Drum Length:	14.5129 ft

Absorber (COLUMN)

Column

Total Pressure Drop:	2.5107 Psi
Internals:	Generic Valve Trays*
Number of Trays:	20
Tray Spacing:	2.0000 ft
Number Of Passes:	1
Weir Height:	3.0000 inch
Foam Derating Factor:	0.8
Diameter:	4.8950 ft
Active Tray Area:	17.7259 ft2
Percent Vapor Flood:	80.0000
Percent DownComer Flood:	70.0000
Outlet Stream 4 Connects:	At Bottom of Column
Outlet Stream 2 Connects:	At Top of Column
Inlet Stream 1 Connects:	Below Tray 20
Inlet Stream 3 Connects:	Above Tray 1

Vapor Phase

Sec:Seg	Temperature deg F	Pressure Psi (g)	Density lb/ft3	Viscosity cP	Total Flow lb/hr
1:1	125.3454	642.4893	4.4861	1.0203E-02	2.1313E+05
1:2	125.9301	642.6143	4.4795	1.0210E-02	2.1320E+05
1:3	126.1394	642.7393	4.4773	1.0212E-02	2.1321E+05
1:4	126.2161	642.8643	4.4773	1.0213E-02	2.1321E+05
1:5	126.2423	642.9893	4.4783	1.0213E-02	2.1322E+05
1:6	126.2444	643.1143	4.4798	1.0213E-02	2.1322E+05
1:7	126.2285	643.2394	4.4817	1.0213E-02	2.1323E+05
1:8	126.1919	643.3644	4.4843	1.0213E-02	2.1324E+05
1:9	126.1270	643.4894	4.4877	1.0211E-02	2.1325E+05
1:10	126.0208	643.6144	4.4924	1.0210E-02	2.1327E+05
1:11	125.8541	643.7395	4.4989	1.0207E-02	2.1330E+05
1:12	125.5983	643.8646	4.5082	1.0203E-02	2.1334E+05
1:13	125.2122	643.9897	4.5215	1.0196E-02	2.1340E+05
1:14	124.6379	644.1149	4.5407	1.0187E-02	2.1349E+05
1:15	123.7985	644.2402	4.5682	1.0173E-02	2.1361E+05
1:16	122.6060	644.3656	4.6065	1.0154E-02	2.1377E+05
1:17	121.0019	644.4911	4.6563	1.0129E-02	2.1398E+05
1:18	119.0673	644.6170	4.7131	1.0102E-02	2.1422E+05
1:19	117.1158	644.7436	4.7709	1.0076E-02	2.1447E+05
1:20	115.2768	644.8713	4.8080	1.0061E-02	2.1474E+05

Liquid Phase

Copyright © 2002 - 2012, The Dow Chemical Company

Oil & Gas

Dow Confidential

Sec:Seg	Temperature deg F	Pressure Psi (g)	Density lb/ft3	Viscosity cP	Surface Tension dyne/cm	Total Flow lb/hr
1:1	124.7710	642.6143	62.7503	3.6690	44.9189	3.7992E+04
1:2	125.7359	642.7393	62.7262	3.6087	44.8441	3.7998E+04
1:3	126.0788	642.8643	62.7201	3.5878	44.8192	3.8001E+04
1:4	126.2062	642.9893	62.7197	3.5802	44.8124	3.8005E+04
1:5	126.2566	643.1143	62.7223	3.5776	44.8133	3.8009E+04
1:6	126.2769	643.2394	62.7272	3.5770	44.8190	3.8016E+04
1:7	126.2816	643.3644	62.7349	3.5776	44.8293	3.8025E+04
1:8	126.2736	643.4894	62.7461	3.5794	44.8457	3.8038E+04
1:9	126.2501	643.6144	62.7619	3.5828	44.8707	3.8058E+04
1:10	126.2051	643.7395	62.7838	3.5884	44.9060	3.8087E+04
1:11	126.1284	643.8646	62.8131	3.5971	44.9631	3.8129E+04
1:12	126.0047	643.9897	62.8516	3.6105	45.0434	3.8190E+04
1:13	125.8107	644.1149	62.9012	3.6304	45.1586	3.8277E+04
1:14	125.5091	644.2402	62.9659	3.6602	45.3205	3.8398E+04
1:15	125.0372	644.3656	63.0570	3.7047	45.5415	3.8561E+04
1:16	124.2825	644.4911	63.2118	3.7728	45.8289	3.8769E+04
1:17	123.0480	644.6170	63.5718	3.8792	46.1703	3.9009E+04
1:18	121.1657	644.7436	64.4773	4.0373	46.5264	3.9264E+04
1:19	119.1290	644.8713	65.7438	4.2137	46.8796	3.9530E+04
1:20	115.5961	645.0000	67.0563	4.5985	47.2676	3.9507E+04

Regenerator (COLUMN)

Condenser

Temperature:	120.0000 deg F
Pressure:	6.4336 Psi (g)
Pressure Drop:	3.0000 Psi
Heat Duty:	-0.7372 MMBtu/hr
Reflux Flowrate:	654.9449 lb/hr

Reboiler

Temperature:	250.9129 deg F
Pressure:	13.0000 Psi (g)
Pressure Drop:	1.0000 Psi
Heat Duty:	3.7000 MMBtu/hr
Stripping Ratio:	0.9330

Column

Total Pressure Drop:	2.5664 Psi
Internals:	Generic Valve Trays*
Number of Trays:	20
Tray Spacing:	2.0000 ft
Number Of Passes:	1
Weir Height:	3.0000 inch
Foam Derating Factor:	0.75
Diameter:	2.2314 ft
Active Tray Area:	2.6825 ft2
Percent Vapor Flood:	80.0000
Percent DownComer Flood:	75.0000
Inlet Stream 8 Connects:	Above Tray 1

Vapor Phase

Oil & Gas

Dow Confidential

Sec:Seg	Temperature deg F	Pressure Psi (g)	Density lb/ft3	Viscosity cP	Total Flow lb/hr
1:1	209.7199	9.4336	0.1031	1.6620E-02	2389.4039
1:2	218.1391	9.5580	9.4221E-02	1.6136E-02	2647.2466
1:3	225.1073	9.6833	8.5797E-02	1.5599E-02	2953.2899
1:4	229.9995	9.8095	7.9801E-02	1.5151E-02	3213.8679
1:5	233.3074	9.9366	7.5863E-02	1.4805E-02	3383.3884
1:6	235.6651	10.0644	7.3162E-02	1.4532E-02	3482.1539
1:7	237.4713	10.1925	7.1189E-02	1.4309E-02	3541.7367
1:8	238.9338	10.3208	6.9683E-02	1.4121E-02	3581.6742
1:9	240.1620	10.4494	6.8507E-02	1.3962E-02	3611.3916
1:10	241.2192	10.5782	6.7577E-02	1.3826E-02	3635.2701
1:11	242.1462	10.7070	6.6839E-02	1.3709E-02	3655.4954
1:12	242.9712	10.8360	6.6254E-02	1.3607E-02	3673.2769
1:13	243.7149	10.9651	6.5791E-02	1.3518E-02	3689.3466
1:14	244.3931	11.0943	6.5428E-02	1.3441E-02	3704.1755
1:15	245.0182	11.2235	6.5149E-02	1.3373E-02	3718.0787
1:16	245.6013	11.3528	6.4936E-02	1.3313E-02	3731.2716
1:17	246.1560	11.4822	6.4779E-02	1.3261E-02	3743.8995
1:18	246.7093	11.6116	6.4661E-02	1.3215E-02	3756.0275
1:19	247.3422	11.7410	6.4561E-02	1.3180E-02	3767.7230
1:20	248.3379	11.8705	6.4499E-02	1.3141E-02	3777.4665

Liquid Phase

Sec:Seg	Temperature deg F	Pressure Psi (g)	Density lb/ft3	Viscosity cP	Surface Tension dyne/cm	Total Flow lb/hr
1:1	206.4418	9.5580	63.3937	1.2056	40.3411	4.0140E+04
1:2	215.2082	9.6833	62.8137	1.0755	39.6530	4.0446E+04
1:3	223.0618	9.8095	62.2137	0.9733	38.9905	4.0707E+04
1:4	228.6512	9.9366	61.7109	0.9068	38.4713	4.0876E+04
1:5	232.3674	10.0644	61.3215	0.8644	38.0845	4.0975E+04
1:6	234.9552	10.1925	61.0236	0.8354	37.7848	4.1035E+04
1:7	236.9017	10.3208	60.7926	0.8138	37.5402	4.1075E+04
1:8	238.4587	10.4494	60.6090	0.7968	37.3333	4.1104E+04
1:9	239.7554	10.5782	60.4589	0.7828	37.1544	4.1128E+04
1:10	240.8647	10.7070	60.3331	0.7710	36.9976	4.1149E+04
1:11	241.8324	10.8360	60.2251	0.7608	36.8589	4.1166E+04
1:12	242.6899	10.9651	60.1307	0.7520	36.7351	4.1182E+04
1:13	243.4599	11.0943	60.0467	0.7442	36.6239	4.1197E+04
1:14	244.1593	11.2235	59.9709	0.7372	36.5232	4.1211E+04
1:15	244.8013	11.3528	59.9018	0.7309	36.4314	4.1224E+04
1:16	245.3961	11.4822	59.8379	0.7251	36.3470	4.1237E+04
1:17	245.9523	11.6116	59.7783	0.7199	36.2690	4.1249E+04
1:18	246.4769	11.7410	59.7220	0.7150	36.1960	4.1261E+04
1:19	246.9761	11.8705	59.6683	0.7103	36.1280	4.1271E+04
1:20	247.4663	12.0000	59.6150	0.7068	36.0530	4.1288E+04

***** End of Application for 45CSR30 Title V Operating Permit ****