Mark C. Alan
SH&E Coordinator

KOPPERS

Koppers Inc.
Carbon Materials and Chemicals
P.O. Box 665
Follansbee, WV 26037
Tel 304 527 5548
Fax 304 527 1813
www.koppers.com

UPS Next Day Air

December 20, 2018

Mr. William F. Durham, Director
WV Dept. of Environmental Protection
Division of Air Quality
601 57th Street SE
Charleston, WV 25304

Subject: Title V Permit Renewal Application
Koppers Inc., Follansbee Tar Plant, Follansbee, WV

Dear Mr. Durham:

Please find enclosed our application (one signed hard copy and two electronic copies on USB flash drives) for the renewal of Title V Permit #R30-00900001-2014 for the subject facility.

Pursuant to an e-mail exchange on November 30, 2018, between Carrie McCumbers of your staff and our consultant, Mark Schooley of Coy Balboni Environmental, Inc., please be advised that Koppers Inc. is currently preparing an R13 modification application to address proposed changes to the Tar Distillation operations at the facility and to address the removal of some significant processing operations. As related to Ms. McCumbers, this Title V renewal application does not reflect all of those proposed changes. Therefore, Koppers is requesting that the DAQ delay processing of this renewal application until after the R13 modification can be reviewed and issued. It is our hope to have the R13 modification application submitted to your agency by mid-January 2019.

Please contact the undersigned if there are any questions regarding this application or if additional information is needed.

Sincerely,

Mark C. Alan

Mark C. Alan
SH&E Coordinator

enclosures

cc: Billy J. Cairns, Koppers Inc. – Cover letter only!
John Irvine, Koppers Inc. – Cover letter only!

TITLE V PERMIT RENEWAL APPLICATION
PERMIT NO. R30-00900001-2014

KOPPERS INC.
FOLLANSBEE TAR PLANT

December 2018

Prepared for:
Koppers Inc.
810 Koppers Road
Follansbee, WV 26037

Prepared by
Coy Balboni Environmental, Inc.
1003 Calmar Drive
Jeannette, PA 15644
412-400-6665

Project 18.049

TITLE V PERMIT RENEWAL APPLICATION
PERMIT NO. R30-0900001-2014

KOPPERS INC.
FOLLANSBEE TAR PLANT

TABLE OF CONTENTS

Title V Permit Application – General Form

ATTACHMENTS

Attachment A.	Area Map
Attachment B.	Plot Plan
Attachment C.	Process Flow Diagrams
Attachment D.	Equipment Table
Attachment E.	Emission Unit Forms
Attachment G.	Air Pollution Control Device Forms
Attachment H.	Compliance Assurance Monitoring (CAM) Plan Forms
Attachment I.	Applicable Requirements
Attachment J.	Potential Emissions Inventory

***Note: Attachment F – Schedule of Compliance is not applicable for this permit application.**

WEST VIRGINIA DEPARTMENT OF ENVIRONMENTAL PROTECTION
DIVISION OF AIR QUALITY
601 57th Street SE
Charleston, WV 25304
Phone: (304) 926-0475
www.dep.wv.gov/daq

INITIAL/RENEWAL TITLE V PERMIT APPLICATION - GENERAL FORMS

Section 1: General Information

1. **Name of Applicant (As registered with the WV Secretary of State's Office):** Koppers Inc.	**2. Facility Name or Location:** Follansbee Tar Plant
3. DAQ Plant ID No.: 009 - 00001	**4. Federal Employer ID No. (FEIN):** 25-1588399

5. **Permit Application Type:**

- ☐ Initial Permit — When did operations commence? MM/DD/YYYY
- ☒ Permit Renewal — What is the expiration date of the existing permit? 06/24/2019
- ☐ Update to Initial/Renewal Permit Application

6. Type of Business Entity:

☒ Corporation ☐ Governmental Agency ☐ LLC
☐ Partnership ☐ Limited Partnership

7. Is the Applicant the:

☐ Owner ☐ Operator ☒ Both

If the Applicant is not both the owner and operator, please provide the name and address of the other party.

_____
_____
_____

8. Number of onsite employees:

~50

9. Governmental Code:

- ☒ Privately owned and operated; 0
- ☐ Federally owned and operated; 1
- ☐ State government owned and operated; 2
- ☐ County government owned and operated; 3
- ☐ Municipality government owned and operated; 4
- ☐ District government owned and operated; 5

10. Business Confidentiality Claims

Does this application include confidential information (per 45CSR31)? ☐ Yes ☒ No

If yes, identify each segment of information on each page that is submitted as confidential, and provide justification for each segment claimed confidential, including the criteria under 45CSR§31-4.1, and in accordance with the DAQ's *"PRECAUTIONARY NOTICE-CLAIMS OF CONFIDENTIALITY"* guidance.

11. Mailing Address		
Street or P.O. Box: 810 Koppers Road, P.O. Box 665		
City: Follansbee	State: WV	Zip: 26037
Telephone Number: (304) 527-0110	Fax Number: (304) 527-1813	

12. Facility Location		
Street: 810 Koppers Road, P.O. Box 665	City: Follansbee	County: WV
UTM Easting: 533.46 km	UTM Northing: 4,465.02 km	Zone: ☒ 17 or ☐ 18
Directions: Take Route, 2 North about 19 Miles from Wheeling to Follansbee. Travel through town and at the sixth traffic light, turn left at Veteran's Drive. Follow the road to plant site.		
Portable Source? ☐ Yes ☒ No		
Is facility located within a nonattainment area? ☐ Yes ☒ No		If yes, for what air pollutants?
Is facility located within 50 miles of another state? ☒ Yes ☐ No		If yes, name the affected state(s). Ohio; Pennsylvania
Is facility located within 100 km of a Class I Area[1]? ☐ Yes ☒ No If no, do emissions impact a Class I Area[1]? ☐ Yes ☒ No		If yes, name the area(s).

[1] *Class I areas include Dolly Sods and Otter Creek Wilderness Areas in West Virginia, and Shenandoah National Park and James River Face Wilderness Area in Virginia.*

13. Contact Information		
Responsible Official: Billy J. Cairns		Title: Plant Manager
Street or P.O. Box: 810 Koppers Road, PO Box 665		
City: Follansbee	State: WV	Zip: 26037-
Telephone Number: (304) 527-5510	Fax Number: (304) 527-1813	
E-mail address: cairnsbj@koppers.com		
Environmental Contact: Mark Alan		Title: SH&E Coordinator
Street or P.O. Box: 810 Koppers Road, PO Box 665		
City: Follansbee	State: WV	Zip: 26037-
Telephone Number: (304) 527-5548	Fax Number: (304) 527-1813	
E-mail address: alanmc@koppers.com		
Application Preparer: Eric Balboni		Title: Vice President
Company: Coy Balboni Environmental, Inc.		
Street or P.O. Box: 1003 Calmar Drive		
City: Jeannette	State: PA	Zip:15644
Telephone Number: (412) 400-6665	Fax Number:	
E-mail address: ebalboni@coybalboni.com		

14. Facility Description

List all processes, products, NAICS and SIC codes for normal operation, in order of priority. Also list any process, products, NAICS and SIC codes associated with any alternative operating scenarios if different from those listed for normal operation.

Process	Products	NAICS	SIC
Tar Refining	Cyclic Organic Crudes and Intermediates	325192	2865

Provide a general description of operations.

The Follansbee Tar Plant is a tar refining facility. The plant produces distillate oils, pavement sealer bases, and various grades of pitch from crude tar, petro tar, decanted oil and co-distilling of these materials.

The plant consists of tar stills, a boiler house, storage tanks, loading racks, recycling operations, and an on-site wastewater treatment plant.

15. Provide an **Area Map** showing plant location as **ATTACHMENT A**.

16. Provide a **Plot Plan(s)**, e.g. scaled map(s) and/or sketch(es) showing the location of the property on which the stationary source(s) is located as **ATTACHMENT B**. For instructions, refer to "Plot Plan - Guidelines."

17. Provide a detailed **Process Flow Diagram(s)** showing each process or emissions unit as **ATTACHMENT C**. Process Flow Diagrams should show all emission units, control equipment, emission points, and their relationships.

Section 2: Applicable Requirements

18. Applicable Requirements Summary	
Instructions: Mark all applicable requirements.	
☐ SIP	☐ FIP
☒ Minor source NSR (45CSR13)	☐ PSD (45CSR14)
☐ NESHAP (45CSR34)	☐ Nonattainment NSR (45CSR19)
☐ Section 111 NSPS	☒ Section 112(d) MACT standards
☐ Section 112(g) Case-by-case MACT	☐ 112(r) RMP
☐ Section 112(i) Early reduction of HAP	☐ Consumer/commercial prod. reqts., section 183(e)
☐ Section 129 Standards/Reqts.	☐ Stratospheric ozone (Title VI)
☐ Tank vessel reqt., section 183(f)	☒ Emissions cap 45CSR§30-2.6.1
☐ NAAQS, increments or visibility (temp. sources)	☒ 45CSR27 State enforceable only rule
☒ 45CSR4 State enforceable only rule	☐ Acid Rain (Title IV, 45CSR33)
☐ Emissions Trading and Banking (45CSR28)	☒ Compliance Assurance Monitoring (40CFR64)
☐ CAIR NO_x Annual Trading Program (45CSR39)	☐ CAIR NO_x Ozone Season Trading Program (45CSR40)
☐ CAIR SO_2 Trading Program (45CSR41)	

19. Non Applicability Determinations
List all requirements which the source has determined not applicable and for which a permit shield is requested. The listing shall also include the rule citation and the reason why the shield applies.
See Regulatory Discussion in Attachment I
☒ Permit Shield

20. Facility-Wide Applicable Requirements

List all facility-wide applicable requirements. For each applicable requirement, include the underlying rule/regulation citation and/or construction permit with the condition number. (*Note: Title V permit condition numbers alone are not the underlying applicable requirements*).

See Regulatory Discussion in Attachment I

☒ Permit Shield

For all facility-wide applicable requirements listed above, provide monitoring/testing / recordkeeping / reporting which shall be used to demonstrate compliance. If the method is based on a permit or rule, include the condition number and/or citation. (Note: Each requirement listed above must have an associated method of demonstrating compliance. If there is not already a required method in place, then a method must be proposed.)

See Regulatory Discussion in Attachment I

Are you in compliance with all facility-wide applicable requirements? ☒ Yes ☐ No

If no, complete the **Schedule of Compliance Form** as **ATTACHMENT F**.

21. **Active Permits/Consent Orders**		
Permit or Consent Order Number	Date of Issuance MM/DD/YYYY	List any Permit Determinations that Affect the Permit *(if any)*
R30-00900001-2014	6/24/2014	
R13-2274J	2/20/2014	
USEPA ACO: CAA-03-2012-0159DA	3/20/2012	
	/ /	
	/ /	
	/ /	
	/ /	
	/ /	
	/ /	
	/ /	
	/ /	
	/ /	
	/ /	
	/ /	
	/ /	
	/ /	
	/ /	
	/ /	
	/ /	
	/ /	
	/ /	
	/ /	
	/ /	

22. Inactive Permits/Obsolete Permit Conditions		
Permit Number	Date of Issuance	Permit Condition Number
R13-0167	07/07/76	Entire Permit (Applicable portions have been incorporate into R13-2274F)
CO-SIP-91-32	11/14/91	Entire Permit (Applicable portions have been incorporate into R13-2274F)
CO-R27-92-16	10/15/95	Entire Permit (replaced by R13-2274)
CO-SIP-E-2005-4	02/07/05	Entire Permit (Applicable portions have been incorporate into R13-2274F)
R13-2274	07/12/99	Entire permit (applicable portions have been incorporated into R13-2274A)
R13-2274A	07/14/02	Entire permit (replaced by R13-2274B)
R13-2274B	12/17/02	Entire permit (replaced by R13-2274C)
R13-2274C	04/22/03	Entire permit (replaced by R13-2274D)
R13-2274D	10/18/04	Entire permit (replaced by R13-2274E)
R13-2274E	05/08/08	Entire permit (replaced by R13-2274F)
R13-2274F	03/03/09	Entire permit (replaced by R13-2274G)
R13-2274G	08/26/11	Entire permit (replaced by R13-2274H)
R13-2274H	07/11/12	Entire permit (replaced by R13-2274I)
R13-2274I	02/14/13	Entire permit (replaced by R13-2274J)
	/ /	
	/ /	
	/ /	

Section 3: Facility-Wide Emissions

23. Facility-Wide Emissions Summary [Tons per Year]	
Criteria Pollutants	Potential Emissions
Carbon Monoxide (CO)	76.87
Nitrogen Oxides (NO_X)	234.19
Lead (Pb)	0.004
Particulate Matter ($PM_{2.5}$)[1]	13.43
Particulate Matter (PM_{10})[1]	14.66
Total Particulate Matter (TSP)	18.38
Sulfur Dioxide (SO_2)	182.45
Volatile Organic Compounds (VOC)	16.92
Hazardous Air Pollutants[2]	Potential Emissions
Total HAP	12.47
See Table 1-1 in Attachment J	
Regulated Pollutants other than Criteria and HAP	Potential Emissions
See Table 1-1 in Attachment J	

[1]$PM_{2.5}$ and PM_{10} are components of TSP.
[2]For HAPs that are also considered PM or VOCs, emissions should be included in both the HAPs section and the Criteria Pollutants section.

Section 4: Insignificant Activities

24. Insignificant Activities (Check all that apply)		
☒	1.	Air compressors and pneumatically operated equipment, including hand tools.
☒	2.	Air contaminant detectors or recorders, combustion controllers or shutoffs.
☒	3.	Any consumer product used in the same manner as in normal consumer use, provided the use results in a duration and frequency of exposure which are not greater than those experienced by consumer, and which may include, but not be limited to, personal use items; janitorial cleaning supplies, office supplies and supplies to maintain copying equipment.
☒	4.	Bathroom/toilet vent emissions.
☒	5.	Batteries and battery charging stations, except at battery manufacturing plants.
☒	6.	Bench-scale laboratory equipment used for physical or chemical analysis, but not lab fume hoods or vents. Many lab fume hoods or vents might qualify for treatment as insignificant (depending on the applicable SIP) or be grouped together for purposes of description.
☐	7.	Blacksmith forges.
☒	8.	Boiler water treatment operations, not including cooling towers.
☒	9.	Brazing, soldering or welding equipment used as an auxiliary to the principal equipment at the source.
☐	10.	CO_2 lasers, used only on metals and other materials which do not emit HAP in the process.
☒	11.	Combustion emissions from propulsion of mobile sources, except for vessel emissions from Outer Continental Shelf sources.
☒	12.	Combustion units designed and used exclusively for comfort heating that use liquid petroleum gas or natural gas as fuel.
☒	13.	Comfort air conditioning or ventilation systems not used to remove air contaminants generated by or released from specific units of equipment.
☐	14.	Demineralized water tanks and demineralizer vents.
☐	15.	Drop hammers or hydraulic presses for forging or metalworking.
☐	16.	Electric or steam-heated drying ovens and autoclaves, but not the emissions from the articles or substances being processed in the ovens or autoclaves or the boilers delivering the steam.
☐	17.	Emergency (backup) electrical generators at residential locations.
☐	18.	Emergency road flares.
☐	19.	Emission units which do not have any applicable requirements and which emit criteria pollutants (CO, NO_x, SO_2, VOC and PM) into the atmosphere at a rate of less than 1 pound per hour and less than 10,000 pounds per year aggregate total for each criteria pollutant from all emission units. Please specify all emission units for which this exemption applies along with the quantity of criteria pollutants emitted on an hourly and annual basis: _____ _____ _____ _____ _____ _____ _____ _____ _____

24. Insignificant Activities (Check all that apply)		
☐	20.	Emission units which do not have any applicable requirements and which emit hazardous air pollutants into the atmosphere at a rate of less than 0.1 pounds per hour and less than 1,000 pounds per year aggregate total for all HAPs from all emission sources. This limitation cannot be used for any source which emits dioxin/furans nor for toxic air pollutants as per 45CSR27. Please specify all emission units for which this exemption applies along with the quantity of hazardous air pollutants emitted on an hourly and annual basis: _____ _____ _____ _____ _____
☐	21.	Environmental chambers not using hazardous air pollutant (HAP) gases.
☐	22.	Equipment on the premises of industrial and manufacturing operations used solely for the purpose of preparing food for human consumption.
☐	23.	Equipment used exclusively to slaughter animals, but not including other equipment at slaughterhouses, such as rendering cookers, boilers, heating plants, incinerators, and electrical power generating equipment.
☒	24.	Equipment used for quality control/assurance or inspection purposes, including sampling equipment used to withdraw materials for analysis.
☒	25.	Equipment used for surface coating, painting, dipping or spray operations, except those that will emit VOC or HAP.
☒	26.	Fire suppression systems.
☒	27.	Firefighting equipment and the equipment used to train firefighters.
☐	28.	Flares used solely to indicate danger to the public.
☐	29.	Fugitive emission related to movement of passenger vehicle provided the emissions are not counted for applicability purposes and any required fugitive dust control plan or its equivalent is submitted.
☐	30.	Hand-held applicator equipment for hot melt adhesives with no VOC in the adhesive formulation.
☒	31.	Hand-held equipment for buffing, polishing, cutting, drilling, sawing, grinding, turning or machining wood, metal or plastic.
☐	32.	Humidity chambers.
☐	33.	Hydraulic and hydrostatic testing equipment.
☐	34.	Indoor or outdoor kerosene heaters.
☐	35.	Internal combustion engines used for landscaping purposes.
☐	36.	Laser trimmers using dust collection to prevent fugitive emissions.
☐	37.	Laundry activities, except for dry-cleaning and steam boilers.
☒	38.	Natural gas pressure regulator vents, excluding venting at oil and gas production facilities.
☐	39.	Oxygen scavenging (de-aeration) of water.
☐	40.	Ozone generators.
☒	41.	Plant maintenance and upkeep activities (e.g., grounds-keeping, general repairs, cleaning, painting, welding, plumbing, re-tarring roofs, installing insulation, and paving parking lots) provided these activities are not conducted as part of a manufacturing process, are not related to the source's primary business activity, and not otherwise triggering a permit modification. (Cleaning and painting activities qualify if they are not subject to VOC or HAP control requirements. Asphalt batch plant owners/operators must still get a permit if otherwise requested.)
☒	42.	Portable electrical generators that can be moved by hand from one location to another. "Moved by

24. Insignificant Activities (Check all that apply)		
		Hand" means that it can be moved without the assistance of any motorized or non-motorized vehicle, conveyance, or device.
☐	43.	Process water filtration systems and demineralizers.
☒	44.	Repair or maintenance shop activities not related to the source's primary business activity, not including emissions from surface coating or de-greasing (solvent metal cleaning) activities, and not otherwise triggering a permit modification.
☒	45.	Repairs or maintenance where no structural repairs are made and where no new air pollutant emitting facilities are installed or modified.
☒	46.	Routing calibration and maintenance of laboratory equipment or other analytical instruments.
☐	47.	Salt baths using nonvolatile salts that do not result in emissions of any regulated air pollutants. Shock chambers.
☐	48.	Shock chambers.
☐	49.	Solar simulators.
☒	50.	Space heaters operating by direct heat transfer.
☒	51.	Steam cleaning operations.
☒	52.	Steam leaks.
☐	53.	Steam sterilizers.
☒	54.	Steam vents and safety relief valves.
☐	55.	Storage tanks, reservoirs, and pumping and handling equipment of any size containing soaps, vegetable oil, grease, animal fat, and nonvolatile aqueous salt solutions, provided appropriate lids and covers are utilized.
☒	56.	Storage tanks, vessels, and containers holding or storing liquid substances that will not emit any VOC or HAP. Exemptions for storage tanks containing petroleum liquids or other volatile organic liquids should be based on size limits such as storage tank capacity and vapor pressure of liquids stored and are not appropriate for this list.
☐	57.	Such other sources or activities as the Director may determine.
☒	58.	Tobacco smoking rooms and areas.
☐	59.	Vents from continuous emissions monitors and other analyzers.

Section 5: Emission Units, Control Devices, and Emission Points

25. Equipment Table
Fill out the **Title V Equipment Table** and provide it as **ATTACHMENT D**.
26. Emission Units
For each emission unit listed in the **Title V Equipment Table**, fill out and provide an **Emission Unit Form** as **ATTACHMENT E**.
For each emission unit not in compliance with an applicable requirement, fill out a **Schedule of Compliance Form** as **ATTACHMENT F**.
27. Control Devices
For each control device listed in the **Title V Equipment Table**, fill out and provide an **Air Pollution Control Device Form** as **ATTACHMENT G**.
For any control device that is required on an emission unit in order to meet a standard or limitation for which the potential pre-control device emissions of an applicable regulated air pollutant is greater than or equal to the Title V Major Source Threshold Level, refer to the **Compliance Assurance Monitoring (CAM) Form(s)** for CAM applicability. Fill out and provide these forms, if applicable, for each Pollutant Specific Emission Unit (PSEU) as **ATTACHMENT H**.

Section 6: Certification of Information

28. Certification of Truth, Accuracy and Completeness and Certification of Compliance

*Note: This Certification must be signed by a responsible official. The **original**, signed in **blue ink**, must be submitted with the application. Applications without an **original** signed certification will be considered as incomplete.*

a. Certification of Truth, Accuracy and Completeness

I certify that I am a responsible official (as defined at 45CSR§30-2.38) and am accordingly authorized to make this submission on behalf of the owners or operators of the source described in this document and its attachments. I certify under penalty of law that I have personally examined and am familiar with the statements and information submitted in this document and all its attachments. Based on my inquiry of those individuals with primary responsibility for obtaining the information, I certify that the statements and information are to the best of my knowledge and belief true, accurate, and complete. I am aware that there are significant penalties for submitting false statements and information or omitting required statements and information, including the possibility of fine and/or imprisonment.

b. Compliance Certification

Except for requirements identified in the Title V Application for which compliance is not achieved, I, the undersigned hereby certify that, based on information and belief formed after reasonable inquiry, all air contaminant sources identified in this application are in compliance with all applicable requirements.

Responsible official (type or print)

Name: **Billy J. Cairns**	Title: **Plant Manager**

Responsible official's signature:

Signature: _____ Signature Date: 20 DEC 2018

(Must be signed and dated in blue ink)

Note: Please check all applicable attachments included with this permit application:

☒	ATTACHMENT A: Area Map
☒	ATTACHMENT B: Plot Plan(s)
☒	ATTACHMENT C: Process Flow Diagram(s)
☒	ATTACHMENT D: Equipment Table
☒	ATTACHMENT E: Emission Unit Form(s)
☐	ATTACHMENT F: Schedule of Compliance Form(s)
☒	ATTACHMENT G: Air Pollution Control Device Form(s)
☐	ATTACHMENT H: Compliance Assurance Monitoring (CAM) Form(s)

All of the required forms and additional information can be found and downloaded from, the DEP website at** http://www.wvdep.org/www.dep.wv.gov/daq, **requested by phone (304) 926-0475, and/or obtained through the mail.

ATTACHMENT A

Area Map

Koppers Inc.
Ohio River
Ohio River
OH-7
Logan Ave
Western Ave
Mahan Ln
Main St
Veterans Dr
West St
Mill Aly
Gilbert Ave
Mahan Ave
Marquette Ave
Allegheny St
27
27
Walker Rd
FOLLANSBEE
Walnut St
Clifton St
5
5
1st St
2nd St
3rd St
Spr
Willow Ln
Cedar Ln

ATTACHMENT B

Plot Plan

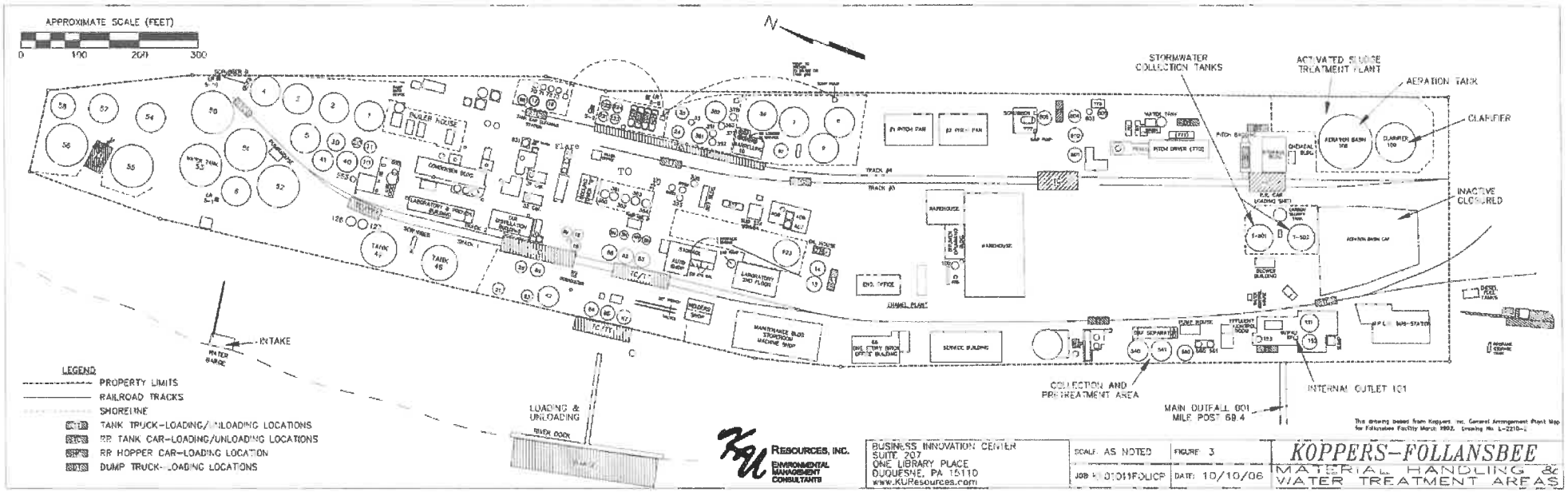
APPROXIMATE SCALE (FEET)
0
100
200
300
N
STORMWATER COLLECTION TANKS
ACTIVATED SLUDGE TREATMENT PLANT
AERATION TANK
CLARIFIER
INACTIVE CLOSURE
INTAKE
LOADING & UNLOADING
COLLECTION AND PRETREATMENT AREA
MAIN OUTFALL 001 MILE POST 69.4
INTERNAL OUTLET 101
LEGEND
PROPERTY LIMITS
RAILROAD TRACKS
SHORELINE
TANK TRUCK-LOADING/UNLOADING LOCATIONS
RR TANK CAR-LOADING/UNLOADING LOCATIONS
RR HOPPER CAR-LOADING LOCATION
DUMP TRUCK-LOADING LOCATIONS
KU RESOURCES, INC.
ENVIRONMENTAL MANAGEMENT CONSULTANTS
BUSINESS INNOVATION CENTER
SUITE 207
ONE LIBRARY PLACE
DUQUESNE, PA 15110
www.KUResources.com
SCALE: AS NOTED
FIGURE: 3
DATE: 10/10/06
KOPPERS-FOLLANSBEE
MATERIAL HANDLING & WATER TREATMENT AREAS

ATTACHMENT C

Flow Diagrams

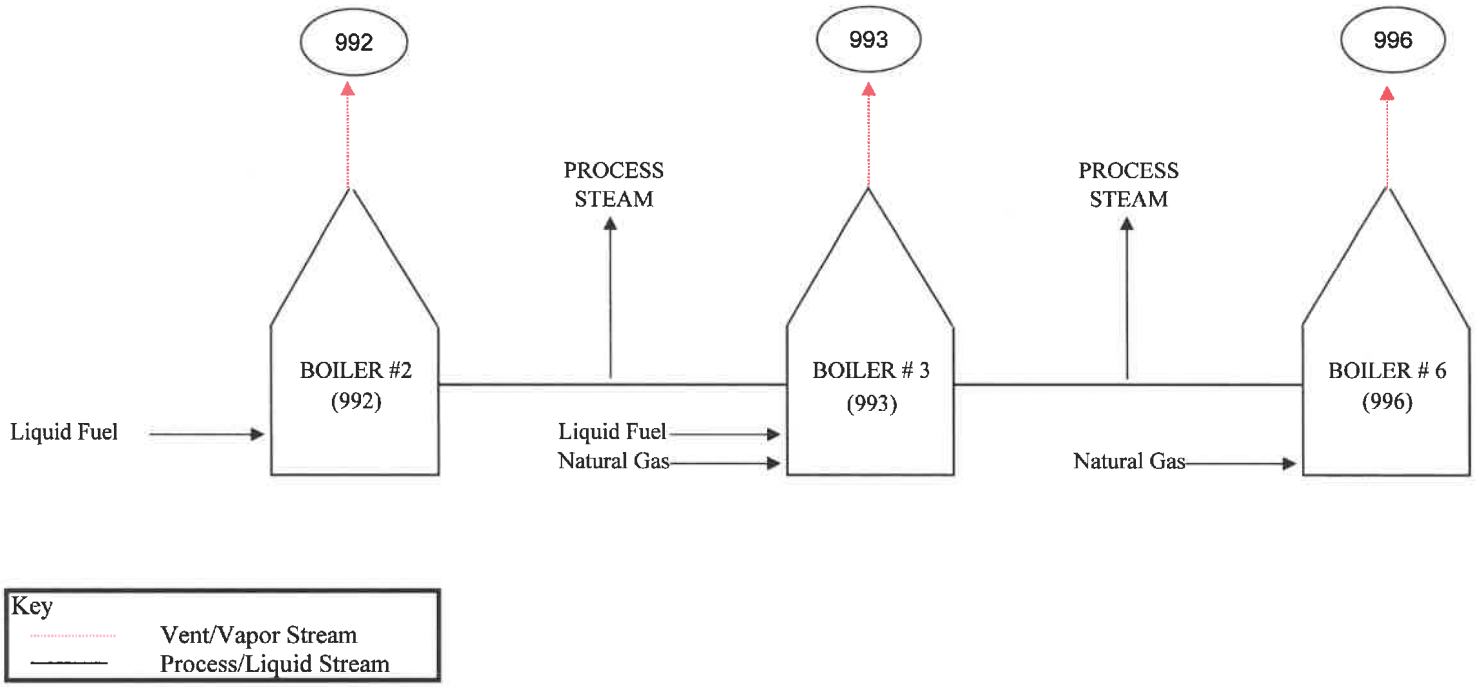

Process Flow Diagram - Group 001; Boilers Koppers Inc., Follansbee Tar Plant, Follansbee, West Virginia	Figure 1

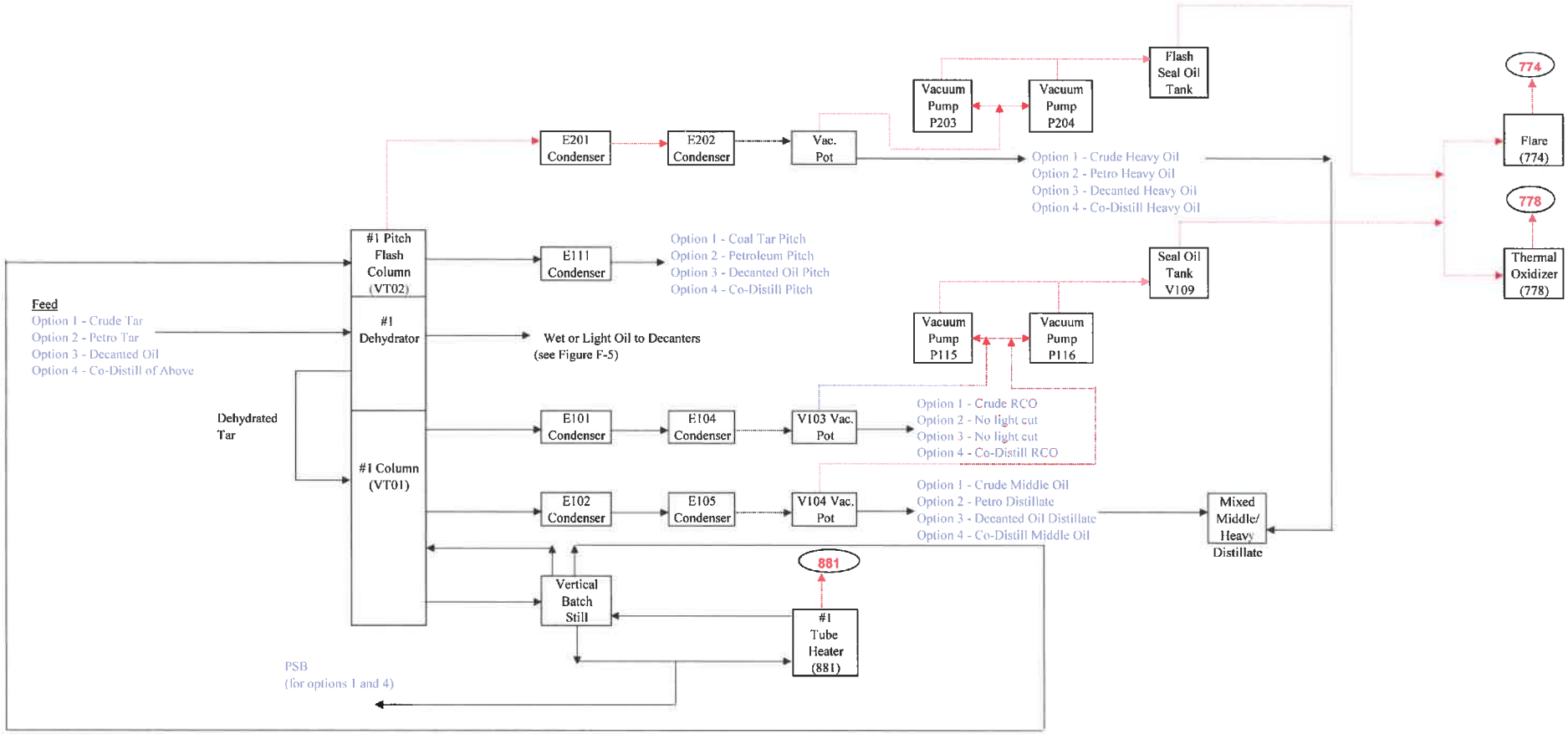

OPTION	FEED	LIGHT FRACTION	MIDDLE FRACTION	BOTTOM FRACTION (assume no pitch Flash)	BOTTOMS FRACTION TO PITCH FLASH Light Fraction	Heavy Fraction
1	Crude Tar	Crude RCO	Crude Middle Oil	Refined Tar/PSB	Crude Heavy Oil	Coal Tar Pitch
2	Petro Tar	None	Petro Distillate	None	Petro Heavy Oil	Petroleum Pitch
3	Decanted Oil	None	Decanted Distillate	None	Decanted Heavy Oil	Decanted Oil Pitch
4	Co-Distill	Co-Distill RCO	Co-Distill Distillate	Refined Tar/PSB	Co-Distill Heavy Oil	Co-Distill Pitch

Process Flow Diagram, Group 002, Tar Refining, #1 Distillation Column
Koppers Inc., Follansbee Tar Plant, Follansbee, West Virginia

Figure 2

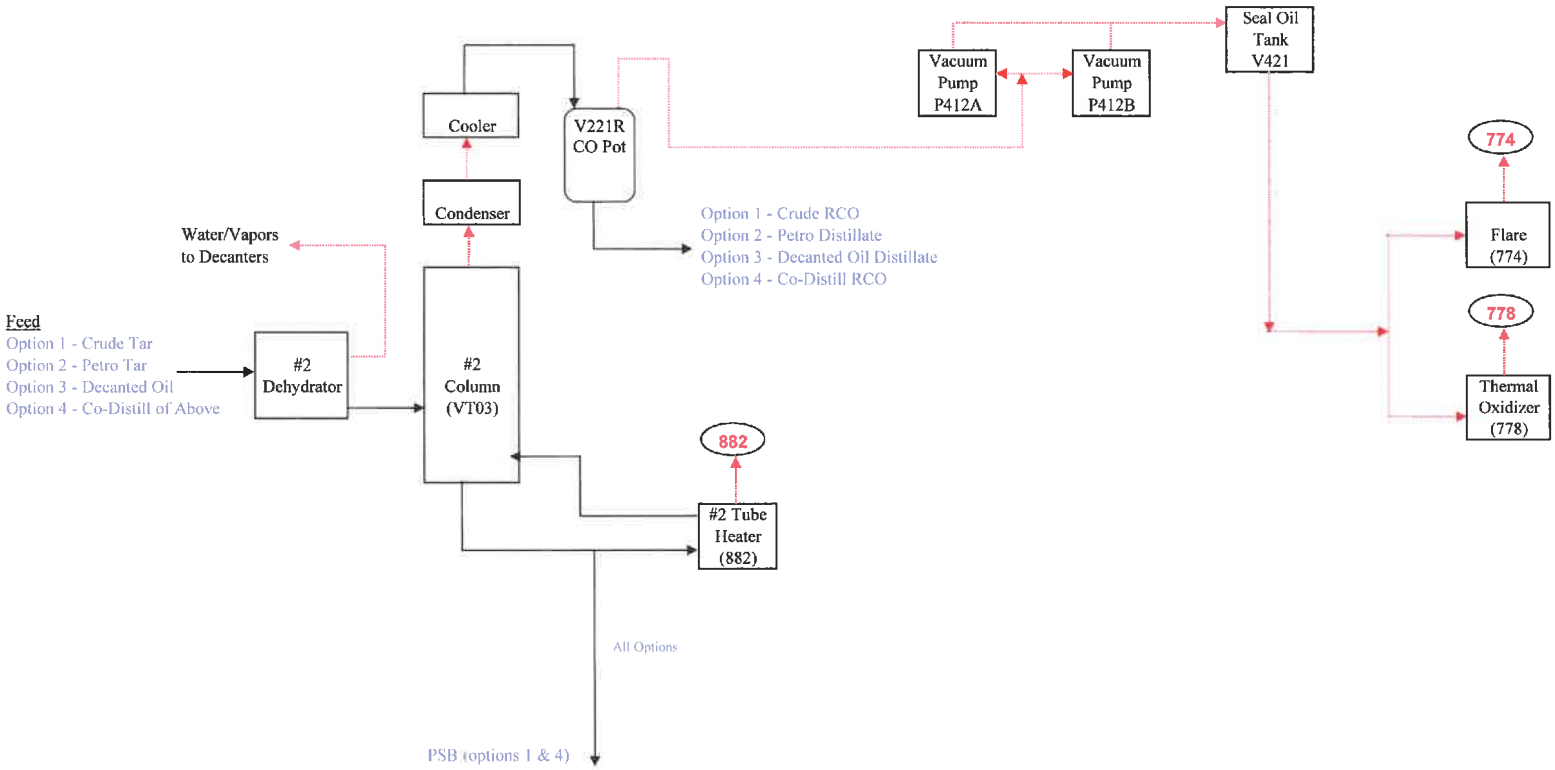

Key
Vent/Vapor Stream
Process/Liquid Stream

#2 COLUMN

OPTION	FEED	LIGHT FRACTION	MIDDLE FRACTION	BOTTOM FRACTION	OR	BOTTOMS FRACTION TO PITCH FLASH #4 Light Fraction	Heavy Fraction
1	Crude Tar	Crude RCO	None	Refined Tar/PSB		Crude Heavy Oil	Coal Tar Pitch
2	Petro Tar - None	None	Petro Distillate	NA		Petro Heavy Oil	Petro Pitch
3	Decanted Oil - None	None	Decanted Oil Distillate	NA		Decanted Heavy Oil	Decanted Oil Pitch
4	Co-Distill	Co-Distill RCO	None	Refined Tar/PSB		Co-Distill Heavy Oil	Co-Distill Pitch

Process Flow Diagram, Group 002, Tar Refining, #2 Distillation Column
Koppers Inc., Follansbee Tar Plant, Follansbee, West Virginia

Figure 3

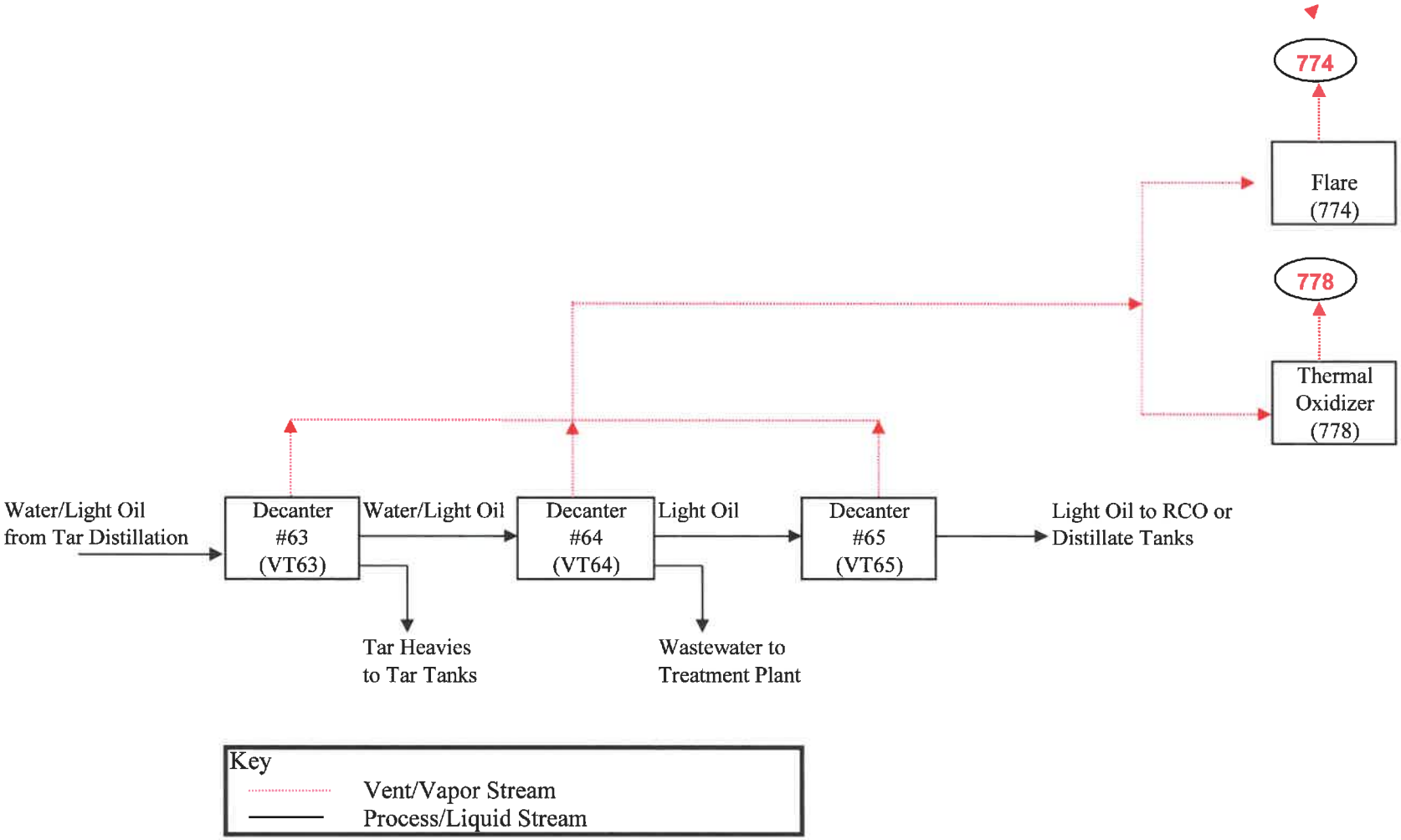

Process Flow Diagram - Group 002: Tar Distillation, Decanters
Koppers Inc., Follansbee Tar Plant, Follansbee, West Virginia

Figure 4

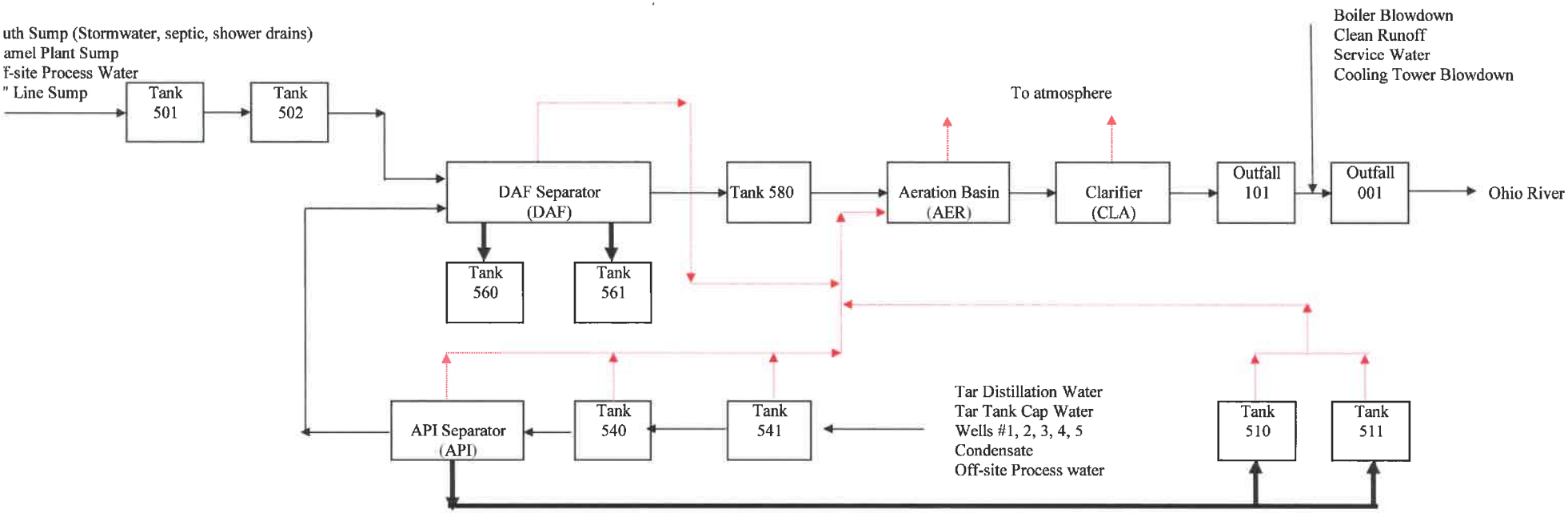

The API Separator, DAF Separator, Tank 510, Tank 511, Tank 540 and 541 are enclosed and the off-gases from those units are directed to the Aeration Basin and used as the process air.

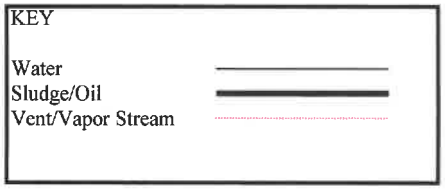

Process Flow Diagram - Group 00C: Wastewater Treatment Plant Koppers Inc., Follansbee Tar Plant, Follansbee, West Virginia	Figure 5

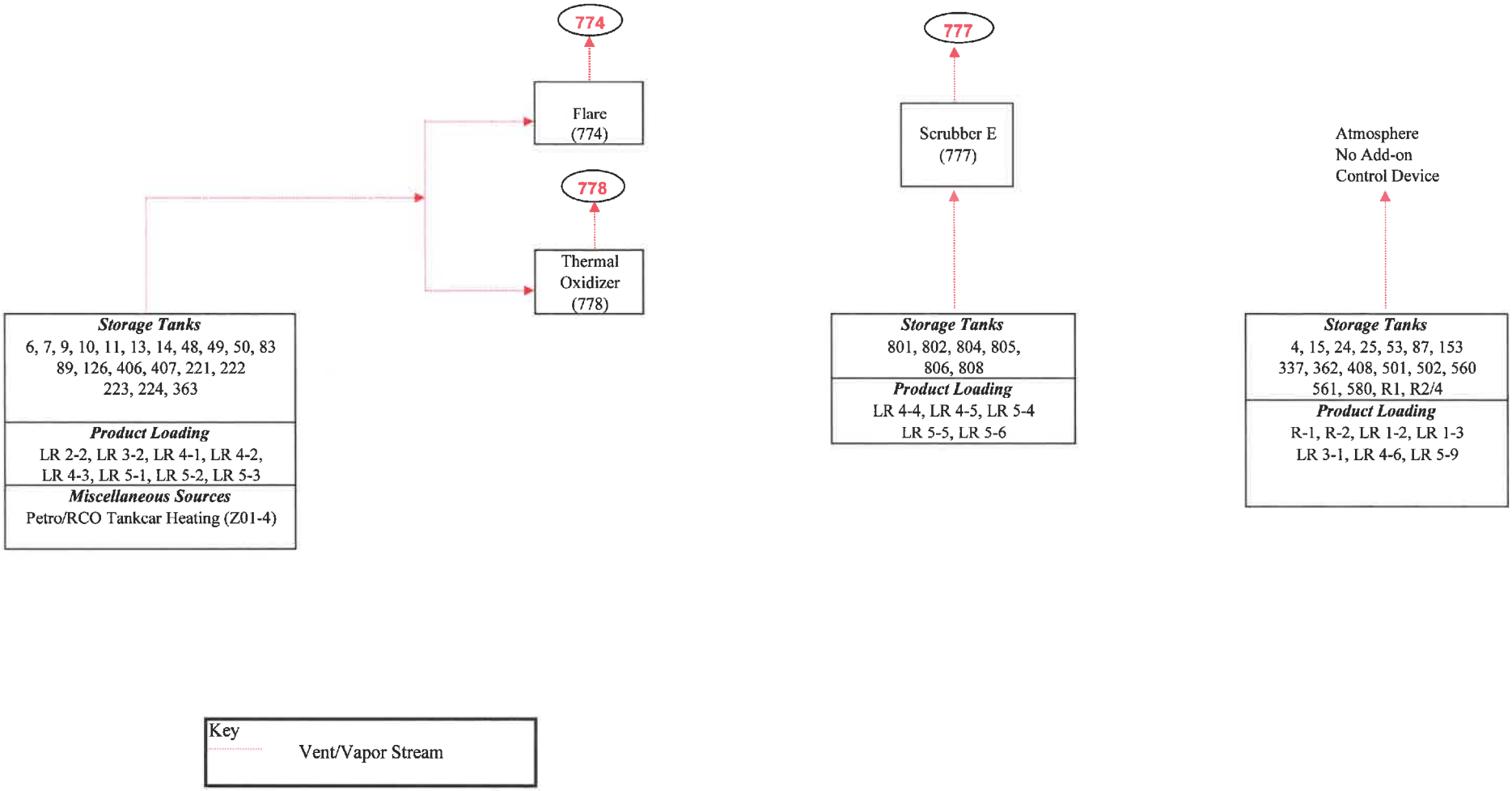

Process Flow Diagram - Flow Diagram of Storage Tanks and Loading Racks
Koppers Inc., Follansbee Tar Plant, Follansbee, West Virginia

Figure 6

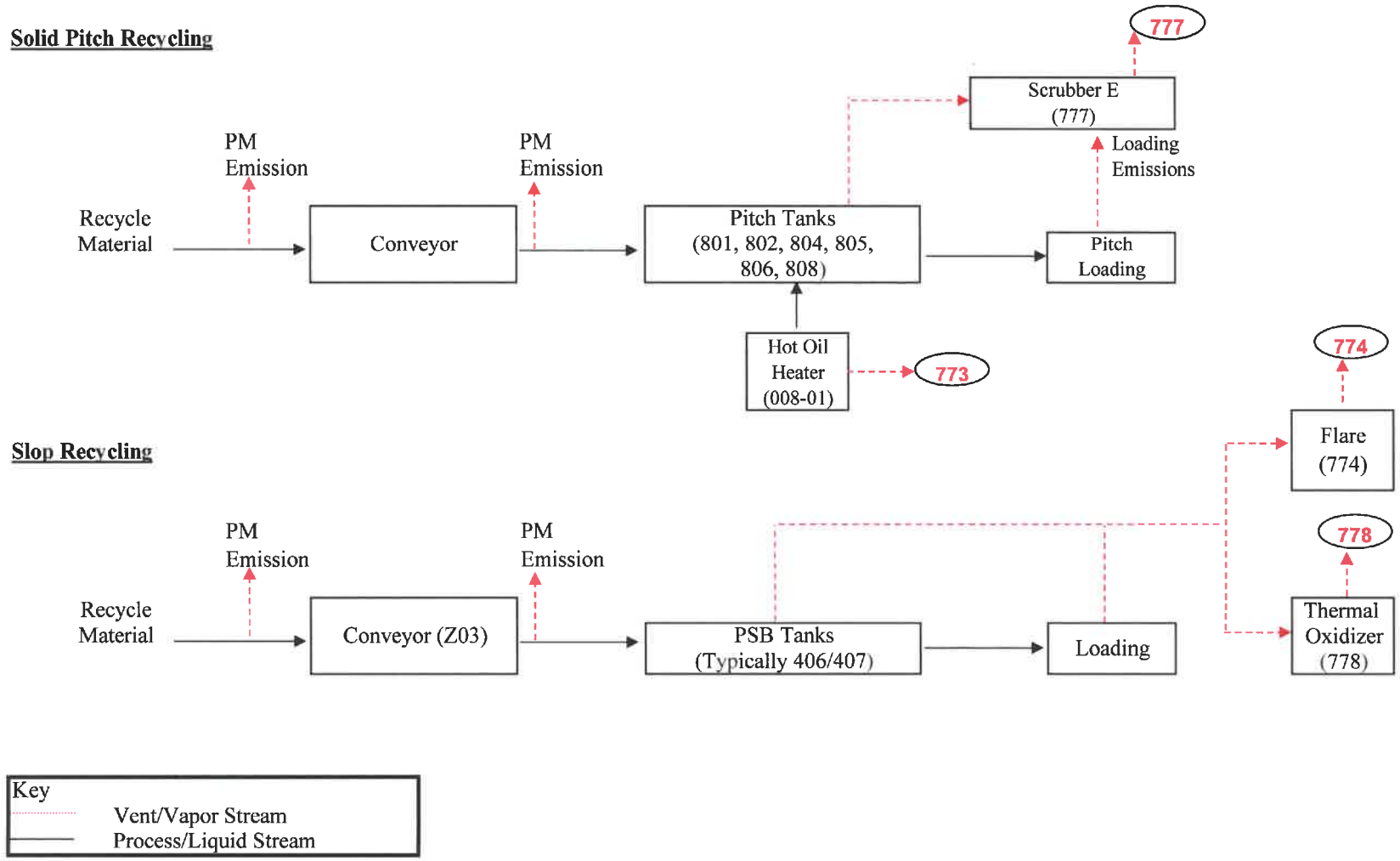

Key
Vent/Vapor Stream
Process/Liquid Stream

Process Flow Diagram - Group 00G; Slop and Pitch Conveying and Recycling Operation Koppers, Inc., Follansbee Tar Plant, Follansbee, West Virginia	Figure 7

ATTACHMENT D

Title V Equipment Table

ATTACHMENT D - Title V Equipment Table

(includes all emission units at the facility except those designated as insignificant activities in Section 4, Item 24 of the General Forms)

Emission Point ID[1]	Control Device[1]	Emission Unit ID[1]	Emission Unit Description	Design Capacity	Year Installed/ Modified
GROUP 001 – INDIRECT HEAT EXCHANGERS (BOILERS & HEATERS)					
992	None	992	Boiler 2	50 MMBtu/hr	1941
993	None	993	Boiler 3	75 MMBtu/hr	1988
996	None	996	Boiler 6	92MMBtu/hr	2012
881	None	881	Tube Heater 1	10 MMBtu/hr	
882	None	882	Tube Heater 2	10 MMBtu/hr	
831	None	831	#31 Tube Heater	29 MMBtu/hr	2012
773	None	008-01	Hot Oil Heater	5 MMBtu/hr	
GROUP 002 – TAR DISTILLATION					
774 or 778	774 or 778	VT01	#1 Column	85 gpm Tar	
774 or 778	774 or 778	VT02	#1 Pitch Flash Column		
774 or 778	774 or 778	VT03	#2 Column	85 gpm Tar	
774 or 778	774 or 778	VT63	Decanter #63	12,900 gal	
774 or 778	774 or 778	VT64	Decanter #64	12,900 gal	
774 or 778	774 or 778	VT65	Decanter #65	12,900 gal	
GROUP 007 – EQUIPMENT LEAKS					
Fugitive	None	007	Entire Facility		
GROUP 009 – PRODUCT LOADING					
Vehicle	None	R-1	Loading Rack		
Vehicle	None	R-2	Loading Rack		
Vehicle	None	LR 1-2	Loading Rack		
Vehicle	None	LR 1-3	Loading Rack		
774 or 778	774 or 778	LR 2-2	Loading Rack		
Vehicle	None	LR 3-1	Loading Rack	Pitch Railcar Heating	
774 or 778	774 or 778	LR 3-2	Loading Rack		

ATTACHMENT D - Title V Equipment Table (includes all emission units at the facility except those designated as insignificant activities in Section 4, Item 24 of the General Forms)					
Emission Point ID[1]	Control Device[1]	Emission Unit ID[1]	Emission Unit Description	Design Capacity	Year Installed/ Modified
774 or 778	774 or 778	LR 4-1	Loading Rack		
774 or 778	774 or 778	LR 4-2	Loading Rack		
774 or 778	774 or 778	LR 4-3	Loading Rack		
777	777	LR 4-4	Loading Rack		
777	777	LR 4-5	Loading Rack		
Vehicle	None	LR 4-6	Loading Rack		
774 or 778	774 or 778	LR 5-1	Loading Rack		
774 or 778	774 or 778	LR 5-2	Loading Rack		
774 or 778	774 or 778	LR 5-3	Loading Rack		
777	777	LR 5-4	Loading Rack		
777	777	LR 5-5	Loading Rack		
777	777	LR 5-6	Loading Rack		
Vehicle	None	LR 5-9	Loading Rack		
GROUP 00A – TANKS					
4	None	4	Tank	514,077 gal	1945
774 or 778	774 or 778	6	Tank	518,484 gal	1951
774 or 778	774 or 778	7	Tank	528,765 gal	1951
774 or 778	774 or 778	9	Tank	514,077 gal	1994
774 or 778	774 or 778	10	Tank	99,525 gal	1965
774 or 778	774 or 778	11	Tank	99,525 gal	1965
774 or 778	774 or 778	13	Tank	68,528 gal	1948
774 or 778	774 or 778	14	Tank	68,528 gal	1948
15	None	15	Tank	60,162 gal	2003
24	None	24	Tank	58,752 gal	1959
25	None	25	Tank	58,752 gal	1959
774 or 778	774 or 778	48	Tank	514,077 gal	1995

ATTACHMENT D - Title V Equipment Table

(includes all emission units at the facility except those designated as insignificant activities in Section 4, Item 24 of the General Forms)

Emission Point ID[1]	Control Device[1]	Emission Unit ID[1]	Emission Unit Description	Design Capacity	Year Installed/ Modified
774 or 778	774 or 778	49	Tank	514,077 gal	1995
774 or 778	774 or 778	50	Tank	1,065,991 gal	2007
53	None	53	Tank	1,062,945 gal	1948
774 or 778	774 or 778	56	Tank	913,707 gal	1969
57	None	57	Tank	440,638 gal	1969
774 or 778	774 or 778	83	Tank	105,797 gal	1966
87	None	87	Tank	105,444 gal	1947
88	None	88	Tank	105,797 gal	1937
774 or 778	774 or 778	89	Tank	105,797 gal	1941
774 or 778	774 or 778	126	Tank	60,162 gal	1970
153	None	153	Tank	11,750 gal	1977
774 or 778	774 or 778	221	Tank	54,146	1956
774 or 778	774 or 778	222	Tank	54,146	1956
774 or 778	774 or 778	223	Tank	54,146	1956
774 or 778	774 or 778	224	Tank	54,146	1956
337	None	337	Tank	19,976 gal	1967
362	None	362	Tank	25,910 gal	1945
774 or 778	774 or 778	363	Tank	25,910 gal	1945
774 or 778	774 or 778	406	Tank	22,843 gal	1951
774 or 778	774 or 778	407	Tank	22,843 gal	1951
408	None	408	Tank	22,843 gal	1951
501	None	501	Tank	499,683 gal	1972
502	None	502	Tank	499,683 gal	1972
560	None	560	Tank	25,592 gal	1953
561	None	561	Tank	25,592 gal	1953
580	None	580	Tank	110,159 gal	1953
777	777	801	Tank	63,546 gal	1963
777	777	802	Tank	63,546 gal	1963
777	777	804	Tank	55,943 gal	1966

ATTACHMENT D - Title V Equipment Table

(includes all emission units at the facility except those designated as insignificant activities in Section 4, Item 24 of the General Forms)

Emission Point ID[1]	Control Device[1]	Emission Unit ID[1]	Emission Unit Description	Design Capacity	Year Installed/ Modified
777	777	805	Tank	34,264 gal	1967
777	777	806	Tank	65,267 gal	1975
777	777	808	Tank	65,267 gal	2008
R1	None	R1	Tank	18,612 gal	1985
R2/4	None	R2/4	Tank	1,200 gal	1957
GROUP 00C – EFFLUENT PLANT					
Aeration Basin	Biological Treat.	API	API Separator	180.274 gpm	
Aeration Basin	Biological Treat.	DAF	Dissolved Air Flotation Separator	180.274 gpm	
Fugitive	None	Aer.Tank	Aeration Basin	1,000,000 gal	
Fugitive	None	Clarifier	Primary Clarifier	360,000 gal	
Aeration Basin	Biological Treat.	510/511	Wastewater Tanks		
540/541	Biological Treat.	540/541	Wastewater Tanks	259,095 gal,	1953
GROUP 00D – BARGE AND TANKCAR HEATING					
Tankcar Vent	None	Z01-1	CCOT Tankcar Heating		
Barge Vent	None	Z01-2	CCOT Barge Heating		
Tankcar Vent	None	Z01-4	Petro Tar Tankcar Loading Heating		
GROUP 00G – SLOP AND PITCH CONVEYING AND RECYCLING GROUP					
Fugitive	None	Z03	Slop Conveyor		2007
PAVED ROADWAYS					
Fugitive	None	Z04	Paved Roadway		
CONTROL DEVICES					
778	778		Thermal Oxidizer (John Zink) 3 burners	67 MMBtu/hr	2008
774	774		Flare (Zeco)	13.8 MMBtu/hr	1994
777	777		Scrubber E	250 gpm flow	

45CSR13 permitted sources, the numbering system used for the emission points, control devices, and emission units should be consistent with the numbering m used in the 45CSR13 permit. For grandfathered sources, the numbering system should be consistent with registrations or emissions inventory previously itted to DAQ. For emission points, control devices, and emissions units which have not been previously labeled, use the following 45CSR13 numbering system: 2S, 3S,... or other appropriate description for emission units; 1C, 2C, 3C,... or other appropriate designation for control devices; 1E, 2E, 3E, ... or other opriate designation for emission points.

ATTACHMENT E

Emission Unit Forms

ATTACHMENT E - Emission Unit Form

Emission Unit Description: Group 001 – Indirect Heat Exchangers (Boilers and Heaters)

Emission unit ID number:	**Emission unit name:**	**List any control devices associated with this emission unit:**
992 993 996 881 882 831 008-01	Boiler 2 Boiler 3 Boiler 6 Tube Heater 1 Tube Heater 2 #31 Tube Heater Hot Oil Heater	N/A

Provide a description of the emission unit (type, method of operation, design parameters, etc.):

Boiler 2: Burns Liquid Fuel
Boiler 3: Burns Liquid Fuel and Natural Gas
Boiler 6: Burns Natural Gas
All Heaters: Burn Natural Gas

Manufacturer:	**Model number:**	**Serial number:**
Boiler 2 - B&W Boiler 3 – Zurn Boiler 6 – Tampella Tube Heater #1 - Born Tube Heater #2 – Born #31 Tube Heater – Born Hot Oil Heater - unknown	N/A	N/A

Construction date:	**Installation date:**	**Modification date(s):**
Boiler 2 – 1941 Boiler 3 – 1988 Boiler 6 – 2012 Tube Heater 1 - unknown Tube Heater 2 - unknown #31 Tube Heater - 2012 Hot Oil Heater - unknown	Same as Construction dates	

Design Capacity (examples: furnaces - tons/hr, tanks - gallons):

Boiler 2 – 50 MMBtu/hr
Boiler 3 – 75 MMBtu/hr
Boiler 6 – 92 MMBtu/hr
Tube Heater 1 – 10 MMBtu/hr
Tube Heater 2 – 10 MMBtu/hr
#31 Tube Heater – 29 MMBtu/hr
Hot Oil Heater - 5 MMBtu/hr

Maximum Hourly Throughput:	**Maximum Annual Throughput:**	**Maximum Operating Schedule:**
See page 2	See page 2	8760 hr/yr

Fuel Usage Data **(fill out all applicable fields)**

Does this emission unit combust fuel?	**If yes, is it?**
_X_ Yes ___ No	_X_ Indirect Fired ___ Direct Fired

Maximum design heat input and/or maximum horsepower rating:	**Type and Btu/hr rating of burners:**
See Design Capacity above	N/A

List the primary fuel type(s) and if applicable, the secondary fuel type(s). For each fuel type listed, provide the maximum hourly and annual fuel usage for each.

Liquid Fuel

Boiler 2 – 365 gal/hr 3,197,000 gal/yr
Boiler 3 – 547 gal/hr 2,357,000 gal/yr
Boiler 6 – N/A

Natural Gas

Boiler 2 – N/A
Boiler 3 – 0.075 mmcf/hr 657 mmcf/yr
Boiler 6 – 0.092 mmcf/hr 806 mmcf/yr
Tube Heater 1 - 0.010 mmcf/hr 88 mmcf/yr
Tube Heater 2 - 0.010 mmcf/hr 88 mmcf/yr
#31 Tube Heater - 0.029 mmcf/hr 254 mmcf/yr
Hot Oil Heater - 0.005 mmcf/hr 44 mmcf/yr

Describe each fuel expected to be used during the term of the permit.

Fuel Type	Max. Sulfur Content	Max. Ash Content	BTU Value
Natural Gas	N/A	Negligible	`1,000 BTU/ft^3
Liquid Fuel	0.25	Negligible	`137,000 BTU/gal

Emissions Data See Attachment J – Potential Emission Calculations

Criteria Pollutants	Potential Emissions	
	PPH	TPY
Carbon Monoxide (CO)		
Nitrogen Oxides (NO_X)		
Lead (Pb)		
Particulate Matter ($PM_{2.5}$)		
Particulate Matter (PM_{10})		
Total Particulate Matter (TSP)		
Sulfur Dioxide (SO_2)		
Volatile Organic Compounds (VOC)		

Hazardous Air Pollutants	Potential Emissions	
	PPH	TPY

Regulated Pollutants other than Criteria and HAP	Potential Emissions	
	PPH	TPY

List the method(s) used to calculate the potential emissions (include dates of any stack tests conducted, versions of software used, source and dates of emission factors, etc.).

Refer to Attachment J: Potential Emission Calculations

Applicable Requirements

List all applicable requirements for this emission unit. For each applicable requirement, include the underlying rule/regulation citation and/or construction permit with the condition number. (*Note: Title V permit condition numbers alone are not the underlying applicable requirements*). If an emission limit is calculated based on the type of source and design capacity or if a standard is based on a design parameter, this information should also be included.

Refer to Attachment I: Discussion of Applicable Requirements

__x__ Permit Shield

For all applicable requirements listed above, provide monitoring/testing/recordkeeping/reporting which shall be used to demonstrate compliance. If the method is based on a permit or rule, include the condition number or citation. (Note: Each requirement listed above must have an associated method of demonstrating compliance. If there is not already a required method in place, then a method must be proposed.)

Refer to Attachment I: Discussion of Applicable Requirements

Are you in compliance with all applicable requirements for this emission unit? _X_ Yes ___No

If no, complete the **Schedule of Compliance Form** as **ATTACHMENT F**.

ATTACHMENT E - Emission Unit Form

Emission Unit Description: Group 002 – Tar Refining Unit: Decanters

Emission unit ID number:	**Emission unit name:**	**List any control devices associated with this emission unit:**
VT63 VT64 VT65	Decanter 63 Decanter 64 Decanter 65	Emissions from VT63, VT64, and VT65 are controlled by a Flare (774) or Thermal Oxidizer (778)

Provide a description of the emission unit (type, method of operation, design parameters, etc.):
Water/light ends from the Tar Distillation Unit is sent first to Decanter 63, where a heavy tar fraction may be decanted. The tar fraction is sent back to the Tar Tanks. The Water/Light Oil mixture is then sent to Decanter 64, where the water is decanted and sent to the Wastewater Treatment Plant. The Light Oil then proceeds to Decanter 65, and sent back to RCO or Distillate Tanks.

Manufacturer:	**Model number:**	**Serial number:**
N/A	N/A	N/A
Construction date:	**Installation date:**	**Modification date(s):**
N/A	N/A	N/A

Design Capacity (examples: furnaces - tons/hr, tanks - gallons):
Decanter 63 – 12,900 Gallons
Decanter 64 – 12,900 Gallons
Decanter 65 – 12,900 Gallons

Maximum Hourly Throughput:	**Maximum Annual Throughput:**	**Maximum Operating Schedule:**
N/A	N/A	8760 Hours/yr

Fuel Usage Data **(fill out all applicable fields)**

Does this emission unit combust fuel? ___Yes _X_ No	**If yes, is it?** ___ Indirect Fired ___Direct Fired
Maximum design heat input and/or maximum horsepower rating: N/A	**Type and Btu/hr rating of burners:** N/A

List the primary fuel type(s) and if applicable, the secondary fuel type(s). For each fuel type listed, provide the maximum hourly and annual fuel usage for each.

N/A

Describe each fuel expected to be used during the term of the permit.

Fuel Type	Max. Sulfur Content	Max. Ash Content	BTU Value
N/A	N/A	N/A	N/A

Emissions Data **Refer to Attachment J for Potential Emission Calculations**		
Criteria Pollutants	Potential Emissions	
	PPH	TPY
Carbon Monoxide (CO)		
Nitrogen Oxides (NO_X)		
Lead (Pb)		
Particulate Matter ($PM_{2.5}$)		
Particulate Matter (PM_{10})		
Total Particulate Matter (TSP)		
Sulfur Dioxide (SO_2)		
Volatile Organic Compounds (VOC)		
Hazardous Air Pollutants	Potential Emissions	
	PPH	TPY
Regulated Pollutants other than Criteria and HAP	Potential Emissions	
	PPH	TPY

List the method(s) used to calculate the potential emissions (include dates of any stack tests conducted, versions of software used, source and dates of emission factors, etc.).

Refer to Attachment J for Potential Emission Calculations

Applicable Requirements

List all applicable requirements for this emission unit. For each applicable requirement, include the underlying rule/regulation citation and/or construction permit with the condition number. (*Note: Title V permit condition numbers alone are not the underlying applicable requirements*). If an emission limit is calculated based on the type of source and design capacity or if a standard is based on a design parameter, this information should also be included.

Refer to Attachment I: Discussion of Applicable Requirements

__X__ Permit Shield

For all applicable requirements listed above, provide monitoring/testing/recordkeeping/reporting which shall be used to demonstrate compliance. If the method is based on a permit or rule, include the condition number or citation. (Note: Each requirement listed above must have an associated method of demonstrating compliance. If there is not already a required method in place, then a method must be proposed.)

Refer to Attachment I: Discussion of Applicable Requirements

Are you in compliance with all applicable requirements for this emission unit? _X_ Yes ___ No

If no, complete the **Schedule of Compliance Form** as **ATTACHMENT F**.

ATTACHMENT E - Emission Unit Form

Emission Unit Description: Group 002 – Tar Refining: Distillation Columns

Emission unit ID number:	Emission unit name:	List any control devices associated with this emission unit:
VT01 VT02 VT03	#1 Column #1 Pitch Flash Column #2 Column	Emissions from VT01, VT02, and VT03 are controlled by a Flare (774) or Thermal Oxidizer (778).

Provide a description of the emission unit (type, method of operation, design parameters, etc.):

The #1 and #2 Columns can operate as single pass distillation columns. The #1 Pitch Flash Column operates under a strong vacuum to produce heavy oil and a hard carbon pitch residue.

Manufacturer:	Model number:	Serial number:
NA	NA	NA

Construction date:	Installation date:	Modification date(s):
NA	NA	NA

Design Capacity (examples: furnaces - tons/hr, tanks - gallons):
VT01 & VT03 – 85 gal/min Tar

Maximum Hourly Throughput:	Maximum Annual Throughput:	Maximum Operating Schedule:
#1 Column – 85 gpm #2 Column – 85 gpm (Crude Tar, Petro Tar, Decant Oil, or any co-distilling of these materials)	60,000,000 gal/yr Crude Tar 30,000,000 gal/yr Petro Tar (Can also co-distill these Materials)	8760 hours/yr

Fuel Usage Data **(fill out all applicable fields)**

Does this emission unit combust fuel? ___Yes __X_ No	If yes, is it? ___ Indirect Fired ___Direct Fired
Maximum design heat input and/or maximum horsepower rating: NA	**Type and Btu/hr rating of burners:** NA

List the primary fuel type(s) and if applicable, the secondary fuel type(s). For each fuel type listed, provide the maximum hourly and annual fuel usage for each.
NA

Describe each fuel expected to be used during the term of the permit.

Fuel Type	Max. Sulfur Content	Max. Ash Content	BTU Value
NA	NA	NA	NA

Emissions Data **Refer to Attachment J for Potential Emission Calculations**		
Criteria Pollutants	Potential Emissions	
	PPH	TPY
Carbon Monoxide (CO)		
Nitrogen Oxides (NO_X)		
Lead (Pb)		
Particulate Matter ($PM_{2.5}$)		
Particulate Matter (PM_{10})		
Total Particulate Matter (TSP)		
Sulfur Dioxide (SO_2)		
Volatile Organic Compounds (VOC)		
Hazardous Air Pollutants	Potential Emissions	
	PPH	TPY
Regulated Pollutants other than Criteria and HAP	Potential Emissions	
	PPH	TPY

List the method(s) used to calculate the potential emissions (include dates of any stack tests conducted, versions of software used, source and dates of emission factors, etc.).

Refer to Attachment J for Potential Emission Calculations

Applicable Requirements

List all applicable requirements for this emission unit. For each applicable requirement, include the underlying rule/regulation citation and/or construction permit with the condition number. (*Note: Title V permit condition numbers alone are not the underlying applicable requirements*). If an emission limit is calculated based on the type of source and design capacity or if a standard is based on a design parameter, this information should also be included.

Refer to Attachment I: Discussion of Applicable Requirements

__X__ Permit Shield

For all applicable requirements listed above, provide monitoring/testing/recordkeeping/reporting which shall be used to demonstrate compliance. If the method is based on a permit or rule, include the condition number or citation. (Note: Each requirement listed above must have an associated method of demonstrating compliance. If there is not already a required method in place, then a method must be proposed.)

Refer to Attachment I: Discussion of Applicable Requirements

Are you in compliance with all applicable requirements for this emission unit? __X_Yes ___No

If no, complete the **Schedule of Compliance Form** as **ATTACHMENT F**.

ATTACHMENT E - Emission Unit Form

See Summary Table Following This Form For All Product Loading Information

Emission Unit Description: Group 009 – Product Loading

Emission unit ID number:	**Emission unit name:**	**List any control devices associated with this emission unit:**
Provide a description of the emission unit (type, method of operation, design parameters, etc.):		
Manufacturer:	**Model number:**	**Serial number:**
Construction date:	**Installation date:**	**Modification date(s):**
Design Capacity (examples: furnaces - tons/hr, tanks - gallons):		
Maximum Hourly Throughput:	**Maximum Annual Throughput:**	**Maximum Operating Schedule:**

Fuel Usage Data **(fill out all applicable fields)**

Does this emission unit combust fuel? __Yes __ No	**If yes, is it?** ___ Indirect Fired ___Direct Fired
Maximum design heat input and/or maximum horsepower rating:	**Type and Btu/hr rating of burners:**

List the primary fuel type(s) and if applicable, the secondary fuel type(s). For each fuel type listed, provide the maximum hourly and annual fuel usage for each.

Describe each fuel expected to be used during the term of the permit.

Fuel Type	Max. Sulfur Content	Max. Ash Content	BTU Value

Emissions Data **Refer to Attachment J for Potential Emission Calculations**		
Criteria Pollutants	Potential Emissions	
	PPH	TPY
Carbon Monoxide (CO)		
Nitrogen Oxides (NO_X)		
Lead (Pb)		
Particulate Matter ($PM_{2.5}$)		
Particulate Matter (PM_{10})		
Total Particulate Matter (TSP)		
Sulfur Dioxide (SO_2)		
Volatile Organic Compounds (VOC)		
Hazardous Air Pollutants	Potential Emissions	
	PPH	TPY
Regulated Pollutants other than Criteria and HAP	Potential Emissions	
	PPH	TPY

List the method(s) used to calculate the potential emissions (include dates of any stack tests conducted, versions of software used, source and dates of emission factors, etc.).

Refer to Attachment J for Potential Emission Calculations

Applicable Requirements

List all applicable requirements for this emission unit. For each applicable requirement, include the underlying rule/regulation citation and/or construction permit with the condition number. (*Note: Title V permit condition numbers alone are not the underlying applicable requirements*). If an emission limit is calculated based on the type of source and design capacity or if a standard is based on a design parameter, this information should also be included.

Refer to Attachment I: Discussion of Applicable Requirements

_X__ Permit Shield

For all applicable requirements listed above, provide monitoring/testing/recordkeeping/reporting which shall be used to demonstrate compliance. If the method is based on a permit or rule, include the condition number or citation. (Note: Each requirement listed above must have an associated method of demonstrating compliance. If there is not already a required method in place, then a method must be proposed.)

Refer to Attachment I: Discussion of Applicable Requirements

Are you in compliance with all applicable requirements for this emission unit? _X__Yes ___No

If no, complete the **Schedule of Compliance Form** as **ATTACHMENT F**.

EMISSIONS UNIT DATA SHEET - PRODUCT LOADING
PRODUCT LOADING DATA SUMMARY TABLE

ID No.	Loading Area Name	Type of Cargo Vessels	Loading Method	Does Ballasting Occur?	No. of Pumps	Liquid Loaded	Liquid Name, Temp, and Vapor Pressure	Max. No. Vessels Loaded at One Time	Maximum Operating Schedule	Maximum Fill Rate (gal/min)	Maximum Annual Throughput (10^3 gal/yr)	Control Equipment	Efficiency (%)	Maximum Emission Rates	Proposed, Monitoring, Record-keeping, Reporting, and Testing
R-1	River Dock, Spout 1	Marine Vessels	Submerged Fill	No	1	See Note 1	See Note 2	1	8,760	700	See Note 2	None		See Attachment J	See Attachment I
R-2	River Dock, Spout 2	Marine Vessels	Submerged Fill	No	1	See Note 1	See Note 2	1	8,760	700	See Note 2	None		See Attachment J	See Attachment I
LR 1-2	Railroad Track 1, Spout 2	Railcars/Trucks	Splash Fill	NA	1	See Note 1	See Note 2	1	8,760	500	See Note 2	None		See Attachment J	See Attachment I
LR 1-3	Railroad Track 1, Spout 2	Railcars/Trucks	Splash Fill	NA	1	See Note 1	See Note 2	1	8,760	500	See Note 2	None		See Attachment J	See Attachment I
LR 2-2	Railroad Track 2, Spout 2	Railcars/Trucks	Splash Fill	NA	1	See Note 1	See Note 2	1	8,760	500	See Note 2	Thermal Oxidizer/Flare	98	See Attachment J	See Attachment I
LR 3-2	Railroad Track 3, Spout 2	Railcars/Trucks	Splash Fill	NA	1	See Note 1	See Note 2	1	8,760	500	See Note 2	Thermal Oxidizer/Flare	98	See Attachment J	See Attachment I
LR 4-1	Railroad Track 4, Spout 1	Railcars/Trucks	Splash Fill	NA	1	See Note 1	See Note 2	1	8,760	500	See Note 2	Thermal Oxidizer/Flare	98	See Attachment J	See Attachment I
LR 4-2	Railroad Track 4, Spout 2	Railcars/Trucks	Splash Fill	NA	1	See Note 1	See Note 2	1	8,760	500	See Note 2	Thermal Oxidizer/Flare	98	See Attachment J	See Attachment I
LR 4-3	Railroad Track 4, Spout 3	Railcars/Trucks	Splash Fill	NA	1	See Note 1	See Note 2	1	8,760	500	See Note 2	Thermal Oxidizer/Flare	98	See Attachment J	See Attachment I
LR 4-4	Railroad Track 4, Spout 4	Railcars/Trucks	Splash Fill	NA	1	See Note 1	See Note 2	1	8,760	500	See Note 2	Scrubber E	80	See Attachment J	See Attachment I
LR 4-5	Railroad Track 4, Spout 5	Railcars/Trucks	Splash Fill	NA	1	See Note 1	See Note 2	1	8,760	500	See Note 2	Scrubber E	80	See Attachment J	See Attachment I
LR 4-6	Railroad Track 4, Spout 6	Railcars/Trucks	Splash Fill	NA	1	See Note 1	See Note 2	1	8,760	500	See Note 2	None		See Attachment J	See Attachment I
LR 5-1	Spout 1	Trucks	Splash Fill	NA	1	See Note 1	See Note 2	1	8,760	500	See Note 2	Thermal Oxidizer/Flare	98	See Attachment J	See Attachment I
LR 5-2	Spout 2	Trucks	Splash Fill	NA	1	See Note 1	See Note 2	1	8,760	500	See Note 2	Thermal Oxidizer/Flare	98	See Attachment J	See Attachment I
LR 5-3	Spout 3	Trucks	Splash Fill	NA	1	See Note 1	See Note 2	1	8,760	500	See Note 2	Thermal Oxidizer/Flare	98	See Attachment J	See Attachment I
LR 5-4	Spout 4	Trucks	Splash Fill	NA	1	See Note 1	See Note 2	1	8,760	500	See Note 2	Scrubber E	80	See Attachment J	See Attachment I
LR 5-5	Spout 5	Trucks	Splash Fill	NA	1	See Note 1	See Note 2	1	8,760	500	See Note 2	Scrubber E	80	See Attachment J	See Attachment I
LR 5-6	Spout 6	Trucks	Splash Fill	NA	1	See Note 1	See Note 2	1	8,760	500	See Note 2	Scrubber E	80	See Attachment J	See Attachment I

Note 1 Koppers Inc. has the flexibility to load commodities from any rack as long as the VOC/HAP control plan in the R13-2274J permit is followed. The services given here are "typical" services.

Note 2 Liquid Data of Commodities to be Loaded

Commodity	Typical Temp (°F)	Typical Vapor Pressure (psia)	Estimated Potential Throughput (gal/yr)
Crude Tar - Barge	220	0.528	3,000,000
Crude Tar -Railcar/Truck	220	0.528	3,000,000
Petro Tar/Decant Oil	250	0.043	6,000,000
Crude Distillate	200	0.046	7,500,000
Mixed Petro Oil (Petroleum Distillate)	200	0.190	13,500,000
Decanted Oil Distillate (Petroleum Distillate)	200	0.016	13,500,000
Coal Tar Pitch	500	0.072	23,100,000
Type A/B Pitch (Liquid)	500	0.040	38,500,000
Petro Pitch	500	0.126	16,500,000
Decanted Oil Pitch	500	0.126	16,500,000
PSB/Petroleum PSB	450	0.819	11,200,000
Modified PSB	450	0.610	16,000,000
Naphthalene	230	0.466	105,797
Naphthalene Still Residue (NSR)	180	0.027	105,797
Petroleum Naphtha	150	6.460	5,500,000
Refined Chemical Oil (RCO)	200	0.386	8,427,120
Refined Tar	450	2.618	16,000,000
Refined Tar, Petroleum Based	250	0.184	125,000
Solid Pitch Loading (Coal Tar, Type A/B, Petro, Decanted Oil Pitches)	NA	NA	NA

ATTACHMENT E - Emission Unit Form

See Summary Table Following This Form For All Tank Information

Emission Unit Description: Group 00A – Storage Tanks

Emission unit ID number:	**Emission unit name:**	**List any control devices associated with this emission unit:**
Provide a description of the emission unit (type, method of operation, design parameters, etc.):		
Manufacturer:	**Model number:**	**Serial number:**
Construction date:	**Installation date:**	**Modification date(s):**
Design Capacity (examples: furnaces - tons/hr, tanks - gallons):		
Maximum Hourly Throughput:	**Maximum Annual Throughput:**	**Maximum Operating Schedule:**

Fuel Usage Data **(fill out all applicable fields)**

Does this emission unit combust fuel? __Yes __ No	**If yes, is it?** ___ Indirect Fired ___Direct Fired
Maximum design heat input and/or maximum horsepower rating:	**Type and Btu/hr rating of burners:**

List the primary fuel type(s) and if applicable, the secondary fuel type(s). For each fuel type listed, provide the maximum hourly and annual fuel usage for each.

Describe each fuel expected to be used during the term of the permit.

Fuel Type	Max. Sulfur Content	Max. Ash Content	BTU Value

Emissions Data **Refer to Attachment J for Potential Emission Calculations**		
Criteria Pollutants	Potential Emissions	
	PPH	TPY
Carbon Monoxide (CO)		
Nitrogen Oxides (NO_X)		
Lead (Pb)		
Particulate Matter ($PM_{2.5}$)		
Particulate Matter (PM_{10})		
Total Particulate Matter (TSP)		
Sulfur Dioxide (SO_2)		
Volatile Organic Compounds (VOC)		
Hazardous Air Pollutants	Potential Emissions	
	PPH	TPY
Regulated Pollutants other than Criteria and HAP	Potential Emissions	
	PPH	TPY

List the method(s) used to calculate the potential emissions (include dates of any stack tests conducted, versions of software used, source and dates of emission factors, etc.).

Refer to Attachment J for Potential Emission Calculations

Applicable Requirements

List all applicable requirements for this emission unit. For each applicable requirement, include the underlying rule/regulation citation and/or construction permit with the condition number. (*Note: Title V permit condition numbers alone are not the underlying applicable requirements*). If an emission limit is calculated based on the type of source and design capacity or if a standard is based on a design parameter, this information should also be included.

Refer to Attachment I: Discussion of Applicable Requirements

_X__ Permit Shield

For all applicable requirements listed above, provide monitoring/testing/recordkeeping/reporting which shall be used to demonstrate compliance. If the method is based on a permit or rule, include the condition number or citation. (Note: Each requirement listed above must have an associated method of demonstrating compliance. If there is not already a required method in place, then a method must be proposed.)

Refer to Attachment I: Discussion of Applicable Requirements

Are you in compliance with all applicable requirements for this emission unit? _X__Yes ___No

If no, complete the **Schedule of Compliance Form** as **ATTACHMENT F**.

EMISSIONS UNIT DATA SHEET - STORAGE TANKS
TANK DATA SUMMARY TABLE

Tank Name	Equipment ID No. Tank	Point ID No. Emission	Device ID No. Control	Date of Construction	Typical Contents [1]	Limitations	Type of Tank	Fill Method	Capacity (gallons) Design	Diameter (ft) Tank	Heigh (ft Tank
Tank 4	4	4	None	1945	Miscellaneous Tanks	None	Fixed Roof	Splash	514,077	50	35
Tank 6	6	774/778	774/778	1951	Crude Tar, Petro Tar, Decanted Oil	None	Fixed Roof	Splash	518,484	50	35.3
Tank 7	7	774/778	774/778	1951	Petroleum Distillate	None	Fixed Roof	Splash	528,765	50	36
Tank 9	9	774/778	774/778	1994	BFO/Petroleum Distillate	None	Fixed Roof	Splash	514,077	50	35
Tank 10	10	774/778	774/778	1965	Miscellaneous Tanks	None	Fixed Roof	Splash	99,525	22	35
Tank 11	11	774/778	774/778	1965	Unwashed Solvent; Debenzolizer Overheads	None	Fixed Roof	Splash	99,525	22	35
Tank 13	13	774/778	774/778	1948	PSB/Petro PSB	None	Fixed Roof	Splash	68,528	24	20.25
Tank 14	14	774/778	774/778	1948	PSB/Petro PSB	None	Fixed Roof	Splash	68,528	24	20.25
Tank 15	15	15	None	2003	Water	None	Fixed Roof	Splash	60,162	16	40
Tank 24	24	24	None	1959	Unwashed Solvent	None	Fixed Roof	Splash	58,752	20	25
Tank 25	25	25	None	1959	Unwashed Solvent	None	Fixed Roof	Splash	58,752	20	25
Tank 48	48	774/778	774/778	1995	Crude Tar/Petro Tar/Decant Oil	None	Fixed Roof	Splash	514,077	50	35
Tank 49	49	774/778	774/778	1995	Crude Tar/Petro Tar/Decant Oil	None	Fixed Roof	Splash	514,077	50	35
Tank 50	50	774/778	774/778	Rebuilt 2007	Petro Tar, Decanted Oil/Crude Tar	None	Fixed Roof	Splash	########	72	35
Tank 53	53	53	None	1948	River Water	None	Fixed Roof	Splash	########	72	34.9
Tank 56	56	774/778	774/778	1969	RCO	None	Fixed Roof	Splash	913,707	72	30
Tank 57	57	57	None	1969	Miscellaneous Tanks	None	Fixed Roof	Splash	440,638	50	30
Tank 83	83	774/778	774/778	1966	Naphthalene	None	Fixed Roof	Splash	105,797	24.5	30
Tank 87	87	87	None	1947	Soda Ash	None	Fixed Roof	Splash	105,444	24.5	29.9
Tank 88	88	88	None	1937	NSR	None	Fixed Roof	Splash	105,797	24.5	30
Tank 89	89	774/778	774/778	1941	RCO/Petroleum Distillate	None	Fixed Roof	Splash	105,797	24.5	30
Tank 126	126	774/778	774/778	1970	Miscellaneous Tanks	None	Fixed Roof	Splash	60,162	16	40
Tank 153	153	153	None	1977	Caustic Soda	None	Fixed Roof	Splash	11,750	10	20
Tank 221	221	774/778	774/778	1956	Petroleum Distillate (Petroleum Naphtha)	None	Fixed Roof	Submerge	54,146	16	36
Tank 222	222	774/778	774/778	1956	Petroleum Distillate (Petroleum Naphtha)	None	Fixed Roof	Submerge	54,146	16	36
Tank 223	223	774/778	774/778	1956	Petroleum Distillate/Coasl Tar Distillate	None	Fixed Roof	Submerge	54,146	16	36
Tank 224	224	774/778	774/778	1956	Petroleum Distillate	None	Fixed Roof	Submerge	54,146	16	36
Tank 337	337	337	None	1967	Caustic Soda	None	Fixed Roof	Splash	19,976	10	34
Tank 362	362	362	None	1945	Thermal Oxidizer Condensate	None	Fixed Roof	Splash	25,910	14	22.5
Tank 363	363	774/778	774/778	1945	Thermal Oxidizer Condensate	None	Fixed Roof	Splash	25,910	14	22.5
Tank 406	406	774/778	774/778	1951	PSB/Petro PSB	None	Fixed Roof	Splash	22,843	12	27
Tank 407	407	774/778	774/778	1951	PSB/Petro PSB	None	Fixed Roof	Splash	22,843	12	27
Tank 408	408	408	None	1951	Miscellaneous Tanks	None	Fixed Roof	Splash	22,843	12	27
Tank 501	501	501	None	1972	Wastewater (Non-process)	None	Fixed Roof	Splash	499,683	45	42

EMISSIONS UNIT DATA SHEET - STORAGE TANKS
TANK DATA SUMMARY TABLE

Tank Name	Equipment ID No. Tank	Point ID No. Emission	Device ID No. Control	Date of Construction	Typical Contents [1]	Limitations	Type of Tank	Fill Method	Capacity (gallons) Design	Diameter (ft) Tank	Heigh (ft Tank
Tank 502	502	502	None	1972	Wastewater (Non-process)	None	Fixed Roof	Splash	499,683	45	42
Tank 540	540	540	None	1953	Wastewater (Process)	None	Fixed Roof	Splash	259,095	35	36
Tank 541	541	541	None	2006	Wastewater (Process)	None	Fixed Roof	Splash	259,095	35	36
Tank 560	560	560	None	1953	DAF Sludge	None	Fixed Roof	Splash	25,592	11	36
Tank 561	561	561	None	1953	DAF Sludge	None	Fixed Roof	Splash	25,592	11	36
Tank 580	580	580	None	1953	Wastewater (Combined)	None	Fixed Roof	Splash	110,159	25	30
Tank 801	801	777	777	1963	Pitch/Petroleum Pitch	None	Fixed Roof	Splash	63,546	26	16
Tank 802	802	777	777	1963	Pitch/Petroleum Pitch	None	Fixed Roof	Splash	63,546	26	16
Tank 804	804	777	777	1966	Pitch/Petroleum Pitch	None	Fixed Roof	Splash	55,943	23	18
Tank 805	805	777	777	1967	Pitch/Petroleum Pitch	None	Fixed Roof	Splash	34,264	18	18
Tank 806	806	777	777	1975	Pitch/Petroleum Pitch	None	Fixed Roof	Splash	65,267	23	21
Tank 808	808	777	777	2008	Pitch/Petroleum Pitch	None	Fixed Roof	Splash	65,267	23	21
Tank R1	R1	R1	None	1985	Crude Tar/Petroleum Tar/Decant Oil	None	Fixed Roof	Splash	18,612	10	22
Tank R2/4	R2/4	R2/4	None	1957	Crude Tar/Petroleum Tar/Decant Oil	None	Fixed Roof	Splash	1,200	4x12	5

[1] Koppers Inc. has the flexibility to store commodities in any tank as long as the VOC/HAP control plan in the R13-2274J permit is followed. The services given here are "typical" services.

ATTACHMENT E - Emission Unit Form

Emission Unit Description: Group 00C – Effluent Plant

Emission unit ID number:	Emission unit name:	List any control devices associated with this emission unit:
API DAF Aer. Tank Clarifier 510 511 540 541	API Separator Dissolved Air Flotation Separator Aeration Basin Primary Clarifier Tank 510 Tank511 Tank 540 Tank 541	API Separator, DAF Separator, and Tanks 510, 511, 540 & 541 are enclosed and off gases are vented to Aeration Basin

Provide a description of the emission unit (type, method of operation, design parameters, etc.):
Process Water is stored in Tanks 540 and 541, and then sent through the API Separator to separate the oil and water. The oil is skimmed and stored in Tanks 510 and 511. The process water along with the stormwater enters the DAF Separator to remove oils and solids. The water continues through the Aeration Tank and the Primary Clarifier, then to the Ohio River.

The API Separator, DAF Separator, and Tanks 510, 511, 540 & 541 are enclosed and the off-gasses are vented to the Aeration Basin. Emissions from the Aeration Basin and Primary Clarifier are fugitive.

Manufacturer:	Model number:	Serial number:
N/A	N/A	N/A
Construction date:	**Installation date:**	**Modification date(s):**
N/A	N/A	N/A

Design Capacity (examples: furnaces - tons/hr, tanks - gallons):

Process Water – 180 gpm
Non-Process Water – 120 gpm

Maximum Hourly Throughput:	Maximum Annual Throughput:	Maximum Operating Schedule:
Process Water – 10,800 Gallons/hr Non-Process Water – 7,200 Gallons/hr	N/A	8760 hrs/yr

Fuel Usage Data **(fill out all applicable fields)**

Does this emission unit combust fuel? __Yes _X_ No	If yes, is it? ___ Indirect Fired ___Direct Fired
Maximum design heat input and/or maximum horsepower rating: N/A	**Type and Btu/hr rating of burners:** N/A

List the primary fuel type(s) and if applicable, the secondary fuel type(s). For each fuel type listed, provide the maximum hourly and annual fuel usage for each.

N/A

Describe each fuel expected to be used during the term of the permit.			
Fuel Type	Max. Sulfur Content	Max. Ash Content	BTU Value
N/A	N/A	N/A	N/A

Emissions Data **Refer to Attachment J for Potential Emission Calculations**

Criteria Pollutants	Potential Emissions	
	PPH	TPY
Carbon Monoxide (CO)		
Nitrogen Oxides (NO_X)		
Lead (Pb)		
Particulate Matter ($PM_{2.5}$)		
Particulate Matter (PM_{10})		
Total Particulate Matter (TSP)		
Sulfur Dioxide (SO_2)		
Volatile Organic Compounds (VOC)		

Hazardous Air Pollutants	Potential Emissions	
	PPH	TPY

Regulated Pollutants other than Criteria and HAP	Potential Emissions	
	PPH	TPY

List the method(s) used to calculate the potential emissions (include dates of any stack tests conducted, versions of software used, source and dates of emission factors, etc.).

Refer to Attachment J for Potential Emission Calculations

Applicable Requirements

List all applicable requirements for this emission unit. For each applicable requirement, include the underlying rule/regulation citation and/or construction permit with the condition number. (*Note: Title V permit condition numbers alone are not the underlying applicable requirements*). If an emission limit is calculated based on the type of source and design capacity or if a standard is based on a design parameter, this information should also be included.

Refer to Attachment I: Discussion of Applicable Requirements

_X__ Permit Shield

For all applicable requirements listed above, provide monitoring/testing/recordkeeping/reporting which shall be used to demonstrate compliance. If the method is based on a permit or rule, include the condition number or citation. (Note: Each requirement listed above must have an associated method of demonstrating compliance. If there is not already a required method in place, then a method must be proposed.)

Refer to Attachment I: Discussion of Applicable Requirements

Are you in compliance with all applicable requirements for this emission unit? _X__Yes ___No

If no, complete the **Schedule of Compliance Form** as **ATTACHMENT F**.

ATTACHMENT E - Emission Unit Form

Emission Unit Description: Group 00D – Barge and Tankcar Heating

Emission unit ID number:	**Emission unit name:**	**List any control devices associated with this emission unit:**
Z01-1 Z01-2 Z01-4	CCOT TankCar Heating CCOT Barge Heating Petro Tar & Decant Oil TankCar Loading Heating	N/A

Provide a description of the emission unit (type, method of operation, design parameters, etc.):
Heating of Crude Tar, Petro Tar, and Decant Oil in tankcars/barges prior to unloading into tanks.

The heating losses associated with these emission units are uncontrolled.

Manufacturer:	**Model number:**	**Serial number:**
N/A	N/A	N/A
Construction date:	**Installation date:**	**Modification date(s):**
N/A	N/A	N/A

Design Capacity (examples: furnaces - tons/hr, tanks - gallons):
N/A

Maximum Hourly Throughput:	**Maximum Annual Throughput:**	**Maximum Operating Schedule:**
N/A	N/A	8760 hrs/yr

Fuel Usage Data **(fill out all applicable fields)**

Does this emission unit combust fuel? __Yes _X_ No	**If yes, is it?** ___ Indirect Fired ___Direct Fired
Maximum design heat input and/or maximum horsepower rating: N/A	**Type and Btu/hr rating of burners:** N/A

List the primary fuel type(s) and if applicable, the secondary fuel type(s). For each fuel type listed, provide the maximum hourly and annual fuel usage for each.

N/A

Describe each fuel expected to be used during the term of the permit.			
Fuel Type	Max. Sulfur Content	Max. Ash Content	BTU Value
N/A	N/A	N/A	N/A

Emissions Data **Refer to Attachment J for Potential Emission Calculations**

Criteria Pollutants	Potential Emissions	
	PPH	TPY
Carbon Monoxide (CO)		
Nitrogen Oxides (NO_X)		
Lead (Pb)		
Particulate Matter ($PM_{2.5}$)		
Particulate Matter (PM_{10})		
Total Particulate Matter (TSP)		
Sulfur Dioxide (SO_2)		
Volatile Organic Compounds (VOC)		

Hazardous Air Pollutants	Potential Emissions	
	PPH	TPY

Regulated Pollutants other than Criteria and HAP	Potential Emissions	
	PPH	TPY

List the method(s) used to calculate the potential emissions (include dates of any stack tests conducted, versions of software used, source and dates of emission factors, etc.).

Refer to Attachment J for Potential Emission Calculations

Applicable Requirements

List all applicable requirements for this emission unit. For each applicable requirement, include the underlying rule/regulation citation and/or construction permit with the condition number. (*Note: Title V permit condition numbers alone are not the underlying applicable requirements*). If an emission limit is calculated based on the type of source and design capacity or if a standard is based on a design parameter, this information should also be included.

Refer to Attachment I: Discussion of Applicable Requirements

_X__ Permit Shield

For all applicable requirements listed above, provide monitoring/testing/recordkeeping/reporting which shall be used to demonstrate compliance. If the method is based on a permit or rule, include the condition number or citation. (Note: Each requirement listed above must have an associated method of demonstrating compliance. If there is not already a required method in place, then a method must be proposed.)

Refer to Attachment I: Discussion of Applicable Requirements

Are you in compliance with all applicable requirements for this emission unit? _X__Yes ___No

If no, complete the **Schedule of Compliance Form** as **ATTACHMENT F**.

ATTACHMENT E - Emission Unit Form

Emission Unit Description Group 00G – Slop and Pitch Conveying and Recycling Group

Emission unit ID number:	**Emission unit name:**	**List any control devices associated with this emission unit:**
Z03	Slop Conveyor	Fugitive particulate source. Refer to tanks for controls.

Provide a description of the emission unit (type, method of operation, design parameters, etc.):
Slop from tank bottoms will be recycled to Tanks 406/407 (or other tanks). A conveyor will be used to transfer the solid material to the tanks. The material will then be heated and loaded with product.

Solid Pitch will be recycled to the Pitch Tanks (801,802,804,805,806 & 808).

Manufacturer:	**Model number:**	**Serial number:**
N/A	N/A	N/A
Construction date:	**Installation date:**	**Modification date(s):**
N/A	2007	N/A

Design Capacity (examples: furnaces - tons/hr, tanks - gallons):
N/A

Maximum Hourly Throughput:	**Maximum Annual Throughput:**	**Maximum Operating Schedule:**
~50 ton/hr Slop ~1,000,000 gallons/yr Slop ~500 tons/yr Pitch	N/A	8760 hrs/yr

Fuel Usage Data **(fill out all applicable fields)**

Does this emission unit combust fuel? __Yes _X_ No	**If yes, is it?** ___ Indirect Fired ___Direct Fired
Maximum design heat input and/or maximum horsepower rating: N/A	**Type and Btu/hr rating of burners:** N/A

List the primary fuel type(s) and if applicable, the secondary fuel type(s). For each fuel type listed, provide the maximum hourly and annual fuel usage for each.

N/A

Describe each fuel expected to be used during the term of the permit.

Fuel Type	Max. Sulfur Content	Max. Ash Content	BTU Value
N/A	N/A	N/A	N/A

Emissions Data **Refer to Attachment J for Potential Emission Calculations**		
Criteria Pollutants	Potential Emissions	
	PPH	TPY
Carbon Monoxide (CO)		
Nitrogen Oxides (NO_X)		
Lead (Pb)		
Particulate Matter ($PM_{2.5}$)		
Particulate Matter (PM_{10})		
Total Particulate Matter (TSP)		
Sulfur Dioxide (SO_2)		
Volatile Organic Compounds (VOC)		
Hazardous Air Pollutants	Potential Emissions	
	PPH	TPY
Regulated Pollutants other than Criteria and HAP	Potential Emissions	
	PPH	TPY

List the method(s) used to calculate the potential emissions (include dates of any stack tests conducted, versions of software used, source and dates of emission factors, etc.).

Refer to Attachment J for Potential Emission Calculations

Applicable Requirements

List all applicable requirements for this emission unit. For each applicable requirement, include the underlying rule/regulation citation and/or construction permit with the condition number. (*Note: Title V permit condition numbers alone are not the underlying applicable requirements*). If an emission limit is calculated based on the type of source and design capacity or if a standard is based on a design parameter, this information should also be included.

Refer to Attachment I: Discussion of Applicable Requirements

_X__ Permit Shield

For all applicable requirements listed above, provide monitoring/testing/recordkeeping/reporting which shall be used to demonstrate compliance. If the method is based on a permit or rule, include the condition number or citation. (Note: Each requirement listed above must have an associated method of demonstrating compliance. If there is not already a required method in place, then a method must be proposed.)

Refer to Attachment I: Discussion of Applicable Requirements

Are you in compliance with all applicable requirements for this emission unit? _X__Yes ___No

If no, complete the **Schedule of Compliance Form** as **ATTACHMENT F**.

ATTACHMENT E - Emission Unit Form

Emission Unit Description: Paved Roadways

Emission unit ID number:	**Emission unit name:**	**List any control devices associated with this emission unit:**
Z04	Paved Roadways	None

Provide a description of the emission unit (type, method of operation, design parameters, etc.):
Paved roadways throughout the plant traveled by various types of vehicles.

Manufacturer:	**Model number:**	**Serial number:**
N/A	N/A	N/A
Construction date:	**Installation date:**	**Modification date(s):**
N/A	1956	N/A

Design Capacity (examples: furnaces - tons/hr, tanks - gallons):

N/A

Maximum Hourly Throughput:	**Maximum Annual Throughput:**	**Maximum Operating Schedule:**
N/A	~15,000 VMT/yr	8760 hrs/yr

Fuel Usage Data **(fill out all applicable fields)**

Does this emission unit combust fuel? __Yes _X_ No	**If yes, is it?** ___ Indirect Fired ___Direct Fired
Maximum design heat input and/or maximum horsepower rating: N/A	**Type and Btu/hr rating of burners:** N/A

List the primary fuel type(s) and if applicable, the secondary fuel type(s). For each fuel type listed, provide the maximum hourly and annual fuel usage for each.

N/A

Describe each fuel expected to be used during the term of the permit.

Fuel Type	Max. Sulfur Content	Max. Ash Content	BTU Value
N/A	N/A	N/A	N/A

Emissions Data **Refer to Attachment J for Potential Emission Calculations**		
Criteria Pollutants	Potential Emissions	
	PPH	TPY
Carbon Monoxide (CO)		
Nitrogen Oxides (NO_X)		
Lead (Pb)		
Particulate Matter ($PM_{2.5}$)		
Particulate Matter (PM_{10})		
Total Particulate Matter (TSP)		
Sulfur Dioxide (SO_2)		
Volatile Organic Compounds (VOC)		
Hazardous Air Pollutants	Potential Emissions	
	PPH	TPY
Regulated Pollutants other than Criteria and HAP	Potential Emissions	
	PPH	TPY

List the method(s) used to calculate the potential emissions (include dates of any stack tests conducted, versions of software used, source and dates of emission factors, etc.).

Refer to Attachment J for Potential Emission Calculations

Applicable Requirements

List all applicable requirements for this emission unit. For each applicable requirement, include the underlying rule/regulation citation and/or construction permit with the condition number. (*Note: Title V permit condition numbers alone are not the underlying applicable requirements*). If an emission limit is calculated based on the type of source and design capacity or if a standard is based on a design parameter, this information should also be included.

Refer to Attachment I: Discussion of Applicable Requirements

_X__ Permit Shield

For all applicable requirements listed above, provide monitoring/testing/recordkeeping/reporting which shall be used to demonstrate compliance. If the method is based on a permit or rule, include the condition number or citation. (Note: Each requirement listed above must have an associated method of demonstrating compliance. If there is not already a required method in place, then a method must be proposed.)

Refer to Attachment I: Discussion of Applicable Requirements

Are you in compliance with all applicable requirements for this emission unit? _X__Yes ___No

If no, complete the **Schedule of Compliance Form** as **ATTACHMENT F**.

ATTACHMENT G

Air Pollution Control Device Forms

ATTACHMENT G - Air Pollution Control Device Form

Thermal Oxidizer (778)

Control device ID number: 778	**List all emission units associated with this control device.** Refer to list of controlled units on the following page	
Manufacturer: John Zink	**Model number:** ZCS-2-5-35-X-1/8-2/8	**Installation date:** 2008

Type of Air Pollution Control Device:

___ Baghouse/Fabric Filter ___ Venturi Scrubber ___ Multiclone

___ Carbon Bed Adsorber ___ Packed Tower Scrubber ___ Single Cyclone

___ Carbon Drum(s) ___ Other Wet Scrubber ___ Cyclone Bank

___ Catalytic Incinerator ___ Condenser ___ Settling Chamber

_X_ Thermal Incinerator ___ Flare ___ Other (describe) _____

___ Wet Plate Electrostatic Precipitator ___ Dry Plate Electrostatic Precipitator

List the pollutants for which this device is intended to control and the capture and control efficiencies.

Pollutant	Capture Efficiency	Control Efficiency
VOC/HAP in Vent Gas	100%	98%

Explain the characteristic design parameters of this control device (flow rates, pressure drops, number of bags, size, temperatures, etc.).

Thermal Oxidizer Height: 35 ft
Thermal Oxidizer Diameter: 5 ft
Total Flow Rate: 1,250 acfm
Temperature: ~1400 F

Is this device subject to the CAM requirements of 40 C.F.R. 64? _X_ Yes ___ No

If Yes, **Complete ATTACHMENT H**

If No, **Provide justification.**

Describe the parameters monitored and/or methods used to indicate performance of this control device.
The combustion chamber temperature is continuously monitored and recorded.

List of Equipment Controlled by the Flare (774) or Thermal Oxidizer (778)

Emission Unit ID – Emission Unit Description

VT01 -	#1 Column
VT02 -	#1 Flash Column
VT03 -	#2 Column
VT63 -	Decanter #63
VT64 -	Decanter #64
VT65 -	Decanter #65
LR 2-2 -	Loading Rack
LR 3-2 -	Loading Rack
LR 4-1 -	Loading Rack
LR 4-2 -	Loading Rack
LR 4-3 -	Loading Rack
LR 5-1 -	Loading Rack
LR 5-2 -	Loading Rack
LR 5-3 -	Loading Rack
6 -	Tank
7 -	Tank
9 -	Tank
10 -	Tank
11 -	Tank
13 -	Tank
14 -	Tank
48 -	Tank
49 -	Tank
50 -	Tank
56 -	Tank
83 -	Tank
89 -	Tank
126 -	Tank
363 -	Tank
406 -	Tank
407 -	Tank
221 -	Tank
222 –	Tank
223 -	Tank
224 -	Tank

ATTACHMENT G - Air Pollution Control Device Form

Flare (774)

Control device ID number: 774	**List all emission units associated with this control device.** Refer to list of controlled units on the following page	
Manufacturer: Zeeco, Inc.	**Model number:** SO9496	**Installation date:** 1994

Type of Air Pollution Control Device:

___ Baghouse/Fabric Filter ___ Venturi Scrubber ___ Multiclone

___ Carbon Bed Adsorber ___ Packed Tower Scrubber ___ Single Cyclone

___ Carbon Drum(s) ___ Other Wet Scrubber ___ Cyclone Bank

___ Catalytic Incinerator ___ Condenser ___ Settling Chamber

___ Thermal Incinerator _X_ Flare ___ Other (describe) _____

___ Wet Plate Electrostatic Precipitator ___ Dry Plate Electrostatic Precipitator

List the pollutants for which this device is intended to control and the capture and control efficiencies.

Pollutant	Capture Efficiency	Control Efficiency
VOC/HAP in Vent Gas	100%	98%

Explain the characteristic design parameters of this control device (flow rates, pressure drops, number of bags, size, temperatures, etc.).

Flare Height: 60 ft
Flare Diameter: 1.5 ft
Total Flow Rate: 120,000 acf/hr
Temperature: ~2000 F

Is this device subject to the CAM requirements of 40 C.F.R. 64? _X_ Yes ___ No

If Yes, **Complete ATTACHMENT H**

If No, **Provide justification.**

Describe the parameters monitored and/or methods used to indicate performance of this control device.
The pilot flame is monitored by a thermocouple. Flow meters measure waste and auxiliary gas.

List of Equipment Controlled by the Flare (774) or Thermal Oxidizer (778)

Emission Unit ID – Emission Unit Description

VT01 - #1 Column
VT02 - #1 Flash Column
VT03 - #2 Column
VT63 - Decanter #63
VT64 - Decanter #64
VT65 - Decanter #65
LR 2-2 - Loading Rack
LR 3-2 - Loading Rack
LR 4-1 - Loading Rack
LR 4-2 - Loading Rack
LR 4-3 - Loading Rack
LR 5-1 - Loading Rack
LR 5-2 - Loading Rack
LR 5-3 - Loading Rack
6 - Tank
7 - Tank
9 - Tank
10 - Tank
11 - Tank
13 - Tank
14 - Tank
48 - Tank
49 - Tank
50 - Tank
56 - Tank
83 - Tank
89 - Tank
126 - Tank
363 - Tank
406 - Tank
407 - Tank
221 - Tank
222 – Tank
223 - Tank
224 - Tank

ATTACHMENT G - Air Pollution Control Device Form

Scrubber E (777)

Control device ID number: 777	**List all emission units associated with this control device.** Refer to list of controlled units on the following page	
Manufacturer: Not Known	**Model number:** Not Known	**Installation date:** Not Known

Type of Air Pollution Control Device:

___ Baghouse/Fabric Filter	___ Venturi Scrubber	___ Multiclone
___ Carbon Bed Adsorber	___ Packed Tower Scrubber	___ Single Cyclone
___ Carbon Drum(s)	_X_ Other Wet Scrubber	___ Cyclone Bank
___ Catalytic Incinerator	___ Condenser	___ Settling Chamber
___ Thermal Incinerator	___ Flare	___ Other (describe) _____
___ Wet Plate Electrostatic Precipitator		___ Dry Plate Electrostatic Precipitator

List the pollutants for which this device is intended to control and the capture and control efficiencies.

Pollutant	Capture Efficiency	Control Efficiency
VOC/HAP in Vent Gas	100%	80%

Explain the characteristic design parameters of this control device (flow rates, pressure drops, number of bags, size, temperatures, etc.).

Scrubbing Liquor: Methyl Naphthalene or Petroleum Distillate
Gas Flow Rate into Collector: 33 acfm
Inlet Temperature: ~200 F
Outlet Temperature: 70 F

Is this device subject to the CAM requirements of 40 C.F.R. 64? _X_ Yes ___ No

If Yes, **Complete ATTACHMENT H**

If No, **Provide justification.**

Describe the parameters monitored and/or methods used to indicate performance of this control device.
Exhaust temperature is monitored on a monthly basis.

List of Equipment Controlled by Scrubber E (777)

Emission Unit ID – Emission Unit Description

LR 4-4 -	Loading Rack
LR 4-5 -	Loading Rack
LR 5-4 -	Loading Rack
LR 5-5 -	Loading Rack
LR 5-6 -	Loading Rack
801 -	Tank 801
802 -	Tank 802
804 -	Tank 804
805 -	Tank 805
806 -	Tank 806
808 -	Tank 808

ATTACHMENT H

Compliance Assurance Monitoring (CAM) Form

ATTACHMENT H - Compliance Assurance Monitoring (CAM) Plan Form

For definitions and information about the CAM rule, please refer to 40 CFR Part 64. Additional information (including guidance documents) may also be found at http://www.epa.gov/ttn/emc/cam.html

CAM APPLICABILITY DETERMINATION

1) Does the facility have a PSEU (Pollutant-Specific Emissions Unit considered separately with respect to **EACH** regulated air pollutant) that is subject to CAM (40 CFR Part 64), which must be addressed in this CAM plan submittal? To determine applicability, a PSEU must meet **all** of the following criteria (*If No, then the remainder of this form need not be completed*):

☒ YES ☐ NO

a. The PSEU is located at a major source that is required to obtain a Title V permit;

b. The PSEU is subject to an emission limitation or standard for the applicable regulated air pollutant that is NOT exempt;

LIST OF EXEMPT EMISSION LIMITATIONS OR STANDARDS:

- NSPS (40 CFR Part 60) or NESHAP (40 CFR Parts 61 and 63) proposed after 11/15/1990.
- Stratospheric Ozone Protection Requirements.
- Acid Rain Program Requirements.
- Emission Limitations or Standards for which a WVDEP Division of Air Quality Title V permit specifies a continuous compliance determination method, as defined in 40 CFR §64.1.
- An emission cap that meets the requirements specified in 40 CFR §70.4(b)(12).

c. The PSEU uses an add-on control device (as defined in 40 CFR §64.1) to achieve compliance with an emission limitation or standard;

d. The PSEU has potential pre-control device emissions of the applicable regulated air pollutant that are equal to or greater than the Title V Major Source Threshold Levels; AND

e. The PSEU is NOT an exempt backup utility power emissions unit that is municipally-owned.

BASIS OF CAM SUBMITTAL

2) Mark the appropriate box below as to why this CAM plan is being submitted as part of an application for a Title V permit:

☒ RENEWAL APPLICATION. **ALL** PSEUs for which a CAM plan has NOT yet been approved need to be addressed in this CAM plan submittal.

☐ INITIAL APPLICATION (submitted after 4/20/98). **ONLY** large PSEUs (i. e., PSEUs with potential post-control device emissions of an applicable regulated air pollutant that are equal to or greater than Major Source Threshold Levels) need to be addressed in this CAM plan submittal.

☐ SIGNIFICANT MODIFICATION TO LARGE PSEUs. **ONLY** large PSEUs being modified after 4/20/98 need to be addressed in this cam plan submittal. For large PSEUs with an approved CAM plan, Only address the appropriate monitoring requirements affected by the significant modification.

3) [a] BACKGROUND DATA AND INFORMATION

Complete the following table for **all** PSEUs that need to be addressed in this CAM plan submittal. This section is to be used to provide background data and information for each PSEU In order to supplement the submittal requirements specified in 40 CFR §64.4. If additional space is needed, attach and label accordingly.

PSEU DESIGNATION	DESCRIPTION	POLLUTANT	CONTROL DEVICE	[b] EMISSION LIMITATION or STANDARD	[c] MONITORING REQUIREMENT
Tar Distillation	#1 Column, #1 Pitch Flash Column, #2 Column, Decanters 63-65	VOC Total HAP	Thermal Oxidizer or Flares	Flare/Thermal Oxidizer hourly and annual limits for each pollutant and facility wide annual limits for each pollutant (R13-2274J)	For the thermal oxidizer, continuous monitoring of combustion temperature. For the flare, continuous monitoring of presence of a flame using thermocouple and continuous fuel flow monitoring for net heating value
Various Storage Tanks	6, 7, 9, 10, 11, 13, 14, 48, 49, 50, 83, 89, 126, 406, 407, 221, 222, 223, 224	VOC Total HAP	Thermal Oxidizer or Flares	Flare/Thermal Oxidizer hourly and annual limits for each pollutant and facility wide annual limits for each pollutant (R13-2274J)	For the thermal oxidizer, continuous monitoring of combustion temperature. For the flare, continuous monitoring of presence of a flame using thermocouple and continuous fuel flow monitoring for net heating value.
Various Loading Racks	LR 2-2, 3-2, 4-1, 4-2, 4-3, 5-1, 5-2, 5-3	VOC Total HAP	Thermal Oxidizer or Flares	Flare/Thermal Oxidizer hourly and annual limits for each pollutant and facility wide annual limits for each pollutant (R13-2274J)	For the thermal oxidizer, continuous monitoring of combustion temperature. For the flare, continuous monitoring of presence of a flame using thermocouple and continuous fuel flow monitoring

[a] If a control device is common to more than one PSEU, one monitoring plan may be submitted for the control device with the affected PSEUs identified and any conditions that must be maintained or monitored in accordance with 40 CFR §64.3(a). If a single PSEU is controlled by more than one control device similar in design and operation, one monitoring plan for the applicable control devices may be submitted with the applicable control devices identified and any conditions that must be maintained or monitored in accordance with 40 CFR §64.3(a).

[b] Indicate the emission limitation or standard for any applicable requirement that constitutes an emission limitation, emission standard, or standard of performance (as defined in 40 CFR §64.1).

[c] Indicate the monitoring requirements for the PSEU that are required by an applicable regulation or permit condition.

CAM MONITORING APPROACH CRITERIA

Complete this section for **EACH** PSEU that needs to be addressed in this CAM plan submittal. This section may be copied as needed for each PSEU. This section is to be used to provide monitoring data and information for EACH indicator selected for EACH PSEU in order to meet the monitoring design criteria specified in 40 CFR §64.3 and §64.4. if more than two indicators are being selected for a PSEU or if additional space is needed, attach and label accordingly with the appropriate PSEU designation, pollutant, and indicator numbers.

4a) PSEU Designation: Units controlled by the Thermal Oxidizer	**4b) Pollutant:** VOC/HAPs	**4c) [a] Indicator No. 1:** Combustion temperature	**4d) [a] Indicator No. 2:**
5a) GENERAL CRITERIA Describe the MONITORING APPROACH used to measure the indicators:		Combustion temperature is measured by a thermocouple placed inside the firebox or ductwork immediately downstream of the firebox. Data is collected by a data acquisition system.	
[b] Establish the appropriate INDICATOR RANGE or the procedures for establishing the indicator range which provides a reasonable assurance of compliance:		An excursion is defined as a daily (24-hour average) combustion temperature that is lower than the reading from the most recent performance test.	
5b) PERFORMANCE CRITERIA Provide the SPECIFICATIONS FOR OBTAINING REPRESENTATIVE DATA, such as detector location, installation specifications, and minimum acceptable accuracy:		The temperature monitoring and data acquisition systems are installed according to manufacturer's specification. The temperature gauge is placed inside combustion chamber. The DAS will record temperature data at least every 15-minutes.	
[c] For new or modified monitoring equipment, provide VERIFICATION PROCEDURES, including manufacturer's recommendations, TO CONFIRM THE OPERATIONAL STATUS of the monitoring:		NA	
Provide QUALITY ASSURANCE AND QUALITY CONTROL (QA/QC) PRACTICES that are adequate to ensure the continuing validity of the data, (i.e., daily calibrations, visual inspections, routine maintenance, RATA, etc.):		Monthly review of data to ensure proper operations	
[d] Provide the MONITORING FREQUENCY:		Temperature is monitored continuously.	
Provide the DATA COLLECTION PROCEDURES that will be used:		Temperature data is recorded at least once every 15-minutes, and a daily average temperature is calculated.	
Provide the DATA AVERAGING PERIOD for the purpose of determining whether an excursion or exceedance has occurred:		Daily (24-hour) average	

[a] Describe all indicators to be monitored which satisfies 40 CFR §64.3(a). Indicators of emission control performance for the control device and associated capture system may include measured or predicted emissions (including visible emissions or opacity), process and control device operating parameters that affect control device (and capture system) efficiency or emission rates, or recorded findings of inspection and maintenance activities.

[b] Indicator Ranges may be based on a single maximum or minimum value or at multiple levels that are relevant to distinctly different operating conditions, expressed as a function of process variables, expressed as maintaining the applicable indicator in a particular operational status or designated condition, or established as interdependent between more than one indicator. For CEMS, COMS, or PEMS, include the most recent certification test for the monitor.

[c] The verification for operational status should include procedures for installation, calibration, and operation of the monitoring equipment, conducted in accordance with the manufacturer's recommendations, necessary to confirm the monitoring equipment is operational prior to the commencement of the required monitoring.

[d] Emission units with post-control PTE ≥ 100 percent of the amount classifying the source as a major source (i.e., Large PSEU) must collect four or more values per hour to be averaged. A reduced data collection frequency may be approved in limited circumstances. Other emission units must collect data at least once per 24 hour period.

RATIONALE AND JUSTIFICATION

Complete this section for EACH PSEU that needs to be addressed in this CAM plan submittal. This section may be copied as needed for each PSEU. This section is to be used to provide rationale and justification for the selection of EACH indicator and monitoring approach and EACH indicator range in order to meet the submittal requirements specified in 40 CFR §64.4.

6a) PSEU Designation:	6b) Regulated Air Pollutant:
Units controlled by the Thermal Oxidizer	VOC and HAPS

7) **INDICATORS AND THE MONITORING APPROACH**: Provide the rationale and justification for the selection of the indicators and the monitoring approach used to measure the indicators. Also provide any data supporting the rationale and justification. Explain the reasons for any differences between the verification of operational status or the quality assurance and control practices proposed, and the manufacturer's recommendations. (If additional space is needed, attach and label accordingly with the appropriate PSEU designation and pollutant):

Combustion temperature monitoring was selected for the thermal oxidizer because it is an adequate and universally accepted indicator to ensure proper destruction of VOC and HAPs for thermal destruction control devices. All of the EPA MACT standards require combustion temperature monitoring to ensure continual compliance as well.

8) **INDICATOR RANGES**: Provide the rationale and justification for the selection of the indicator ranges. The rationale and justification shall indicate how EACH indicator range was selected by either a COMPLIANCE OR PERFORMANCE TEST, a TEST PLAN AND SCHEDULE, or by ENGINEERING ASSESSMENTS. Depending on which method is being used for each indicator range, include the specific information required below for that specific indicator range. (If additional space is needed, attach and label accordingly with the appropriate PSEU designation and pollutant):

- COMPLIANCE OR PERFORMANCE TEST (Indicator ranges determined from control device operating parameter data obtained during a compliance or performance test conducted under regulatory specified conditions or under conditions representative of maximum potential emissions under anticipated operating conditions. Such data may be supplemented by engineering assessments and manufacturer's recommendations). The rationale and justification shall INCLUDE a summary of the compliance or performance test results that were used to determine the indicator range, and documentation indicating that no changes have taken place that could result in a significant change in the control system performance or the selected indicator ranges since the compliance or performance test was conducted.

- TEST PLAN AND SCHEDULE (Indicator ranges will be determined from a proposed implementation plan and schedule for installing, testing, and performing any other appropriate activities prior to use of the monitoring). The rationale and justification shall INCLUDE the proposed implementation plan and schedule that will provide for use of the monitoring as expeditiously as practicable after approval of this CAM plan, except that in no case shall the schedule for completing installation and beginning operation of the monitoring exceed 180 days after approval.

- ENGINEERING ASSESSMENTS (Indicator Ranges or the procedures for establishing indicator ranges are determined from engineering assessments and other data, such as manufacturers' design criteria and historical monitoring data, because factors specific to the type of monitoring, control device, or PSEU make compliance or performance testing unnecessary). The rationale and justification shall INCLUDE documentation demonstrating that compliance testing is not required to establish the indicator range.

RATIONALE AND JUSTIFICATION:

Engineering Assessment

The minimum combustion temperature from the recent stack test demonstrated a destruction efficiency of greater than 98%.

CAM MONITORING APPROACH CRITERIA

Complete this section for **EACH** PSEU that needs to be addressed in this CAM plan submittal. This section may be copied as needed for each PSEU. This section is to be used to provide monitoring data and information for EACH indicator selected for EACH PSEU in order to meet the monitoring design criteria specified in 40 CFR §64.3 and §64.4. if more than two indicators are being selected for a PSEU or if additional space is needed, attach and label accordingly with the appropriate PSEU designation, pollutant, and indicator numbers.

4a) PSEU Designation: Units controlled by the Flares	**4b) Pollutant:** VOC/HAPs	**4c) [a] Indicator No. 1:** Presence of Pilot or Flare Flame	**4d) [a] Indicator No. 2:** Higher Heating Value determined by fuel flow monitoring and exit velocity calculation.
5a) GENERAL CRITERIA Describe the MONITORING APPROACH used to measure the indicators:		The presence of a pilot or flare flame for the flare is determined by monitoring temperature using a thermocouple. Data is collected using a data acquisition system.	Net HHV is determined by fuel flow monitoring of the waste gas and natural gas to ensure a natural gas flow of at least 25% (ratio of 1 to 3). Exit velocity is determined by a one time only calculation showing the maximum velocity could never exceed 60 feet per second.
[b] Establish the appropriate INDICATOR RANGE or the procedures for establishing the indicator range which provides a reasonable assurance of compliance:		An excursion is defined when the flare or pilot flame is absent, by either a decrease in temperature from thermocouple output or an output signal from sensors indicating no flame.	An excursion is when the fuel flow monitoring shows that a ratio of 25% natural gas was not burned with the waste gas.
5b) PERFORMANCE CRITERIA Provide the SPECIFICATIONS FOR OBTAINING REPRESENTATIVE DATA, such as detector location, installation specifications, and minimum acceptable accuracy:		The monitoring devices and data acquisition systems are installed according to manufacturer's specification.	The fuel flow meters and data acquisition systems are installed according to manufacturer's specification.
[c] For new or modified monitoring equipment, provide VERIFICATION PROCEDURES, including manufacturer's recommendations, TO CONFIRM THE OPERATIONAL STATUS of the monitoring:		NA	NA
Provide QUALITY ASSURANCE AND QUALITY CONTROL (QA/QC) PRACTICES that are adequate to ensure the continuing validity of the data, (i.e., daily calibrations, visual inspections, routine maintenance, RATA, etc.):		Monthly review of data to ensure proper operations	Calibration of the flow meters will be conducted in accordance with manufacturer's instructions and frequencies, but at a minimum annually.
[d] Provide the MONITORING FREQUENCY:		Flame presence (via temperature) is monitored continuously.	Waste and natural gas flow is measured continuously.
Provide the DATA COLLECTION PROCEDURES that will be used:		Monitoring data will be recorded at least once every hour.	Monitoring data is recorded at least once every hour.
Provide the DATA AVERAGING PERIOD for the purpose of determining whether an excursion or exceedance has occurred:		NA	Hourly

[a] Describe all indicators to be monitored which satisfies 40 CFR §64.3(a). Indicators of emission control performance for the control device and associated capture system may include measured or predicted emissions (including visible emissions or opacity), process and control device operating parameters that affect control device (and capture system) efficiency or emission rates, or recorded findings of inspection and maintenance activities.

[b] Indicator Ranges may be based on a single maximum or minimum value or at multiple levels that are relevant to distinctly different operating conditions, expressed as a function of process variables, expressed as maintaining the applicable indicator in a particular operational status or designated

condition, or established as interdependent between more than one indicator. For CEMS, COMS, or PEMS, include the most recent certification test for the monitor.

[c] The verification for operational status should include procedures for installation, calibration, and operation of the monitoring equipment, conducted in accordance with the manufacturer's recommendations, necessary to confirm the monitoring equipment is operational prior to the commencement of the required monitoring.

[d] Emission units with post-control PTE ≥ 100 percent of the amount classifying the source as a major source (i.e., Large PSEU) must collect four or more values per hour to be averaged. A reduced data collection frequency may be approved in limited circumstances. Other emission units must collect data at least once per 24 hour period.

RATIONALE AND JUSTIFICATION

Complete this section for **EACH** PSEU that needs to be addressed in this CAM plan submittal. This section may be copied as needed for each PSEU. This section is to be used to provide rationale and justification for the selection of EACH indicator and monitoring approach and EACH indicator range in order to meet the submittal requirements specified in 40 CFR §64.4.

6a) PSEU Designation:	6b) Regulated Air Pollutant:
Units controlled by the flares	HAPS

7) **INDICATORS AND THE MONITORING APPROACH**: Provide the rationale and justification for the selection of the indicators and the monitoring approach used to measure the indicators. Also provide any data supporting the rationale and justification. Explain the reasons for any differences between the verification of operational status or the quality assurance and control practices proposed, and the manufacturer's recommendations. (If additional space is needed, attach and label accordingly with the appropriate PSEU designation and pollutant):

Temperature monitoring and fuel flow monitoring was selected because these methods are adequate and universally accepted methods for verifying flame presence of flares and determining heating value of fuel combusted. Furthermore, these methods are accepted methods in the EPA MACT standards.

8) **INDICATOR RANGES**: Provide the rationale and justification for the selection of the indicator ranges. The rationale and justification shall indicate how **EACH** indicator range was selected by either a COMPLIANCE OR PERFORMANCE TEST, a TEST PLAN AND SCHEDULE, or by ENGINEERING ASSESSMENTS. Depending on which method is being used for each indicator range, include the specific information required below for that specific indicator range. (If additional space is needed, attach and label accordingly with the appropriate PSEU designation and pollutant):

- COMPLIANCE OR PERFORMANCE TEST (Indicator ranges determined from control device operating parameter data obtained during a compliance or performance test conducted under regulatory specified conditions or under conditions representative of maximum potential emissions under anticipated operating conditions. Such data may be supplemented by engineering assessments and manufacturer's recommendations). The rationale and justification shall INCLUDE a summary of the compliance or performance test results that were used to determine the indicator range, and documentation indicating that no changes have taken place that could result in a significant change in the control system performance or the selected indicator ranges since the compliance or performance test was conducted.

- TEST PLAN AND SCHEDULE (Indicator ranges will be determined from a proposed implementation plan and schedule for installing, testing, and performing any other appropriate activities prior to use of the monitoring). The rationale and justification shall INCLUDE the proposed implementation plan and schedule that will provide for use of the monitoring as expeditiously as practicable after approval of this CAM plan, except that in no case shall the schedule for completing installation and beginning operation of the monitoring exceed 180 days after approval.

- ENGINEERING ASSESSMENTS (Indicator Ranges or the procedures for establishing indicator ranges are determined from engineering assessments and other data, such as manufacturers' design criteria and historical monitoring data, because factors specific to the type of monitoring, control device, or PSEU make compliance or performance testing unnecessary). The rationale and justification shall INCLUDE documentation demonstrating that compliance testing is not required to establish the indicator range.

RATIONALE AND JUSTIFICATION:

NA

ATTACHMENT I

Applicable Requirements

ATTACHMENT I
APPLICABLE REQUIREMENTS

As indicated in the transmittal letter accompanying this renewal application, Koppers intends to submit an R13 modification application for this facility in the very near future. Numerous currently-applicable requirements will need to be revised or eliminated based on that modification application. Those particular requirements are not known at this time. Therefore, a detailed listing of applicable requirements is not being submitted at this time.

Koppers is requesting that the Department of Air Quality delay their review of this renewal application until after the R13 modification is issued. Then, the requirements of that R13 permit could be incorporated into the Title V renewal permit.

ATTACHMENT J

Potential to Emit Calculations

Table A. Assumptions for the 2018 Potential Emissions Inventory, General Data
Koppers Inc., Follansbee Tar Plant, Follansbee, West Virginia

Feed Rates to #1, #2, #4 Stills

#1 Still Capacity	85	gpm	44,676,000 gal/yr @ 8,760 hrs/yr
#2 Still Capacity	85	gpm	44,676,000 gal/yr @ 8,760 hrs/yr
Total Feed			89,352,000 gal/yr @ 8,760 hrs/yr

Maximum Tar Feed into the Tar Refining Columns: Limited by Storage and Raw Material Supply

Maximum Tar Feed into the Tar Refining Columns:	60,000,000	gal/yr	#1 and #2 Columns
	60,000,000	gal/yr	
Maximum Crude Tar	60,000,000	gal/yr	
Maximum Petro Tar Feed	30,000,000	gal/yr	
Maximum Decanted Oil (aka/ Carbon Black Feedstock Oil)	30,000,000	gal/yr	

Pitch/Refined Tar Ratio

	Production/Feed								
Pitch	114,556,000	lbs	11,455,600	gal	45.7802821	75.74 %	Per B. Cairns, use	70	% of Crude Tar Feed for Pitch
PSB	36,700,000	lbs	3,670,000	gal	14.6665068	24.26 %		30	% of Crude Tar Feed for PSB
			15,125,600	gal	60.446789				
Crude Tar			25,023,000	gal					
Crude Tar Feed									

Option 1 - Crude Tar Distillation

Pitch Production:	70	% of feed	
PSB Production:	30	% of feed	
Pitch Cuts			
Total Crude Tar Throughput for Pitch Production:			42,000,000 gal/yr
Light Cut	20	% of total feed	8,400,000 gal/yr
Middle Cut	20	% of total feed	8,400,000 gal/yr
Heavy Oil Cut	5	% of total feed	2,100,000 gal/yr
Pitch Cut	55	% of total feed	23,100,000 gal/yr
Total	100		42,000,000 gal/yr
PSB Cuts			
Total Crude Tar Throughput for PSB Production:			18,000,000 gal/yr
Light Cut	18	% of total feed	3,240,000 gal/yr
Middle Cut	20	% of total feed	3,600,000 gal/yr
PSB Cut	62	% of total feed	11,160,000 gal/yr
Total	100		18,000,000 gal/yr

Option 2 - Petro Tar Distillation

Pitch Production:	70	% of feed	Do not cut PSB using Shell
PSB Production:	30	% of feed	
Pitch Cuts			
Total Shell Tar Throughput for Pitch Production:			21,000,000 gal/yr
Light Cut	0	% of total feed	0 gal/yr
Middle Cut	35	% of total feed	7,350,000 gal/yr
Heavy Oil Cut	10	% of total feed	2,100,000 gal/yr
Pitch Cut	55	% of total feed	11,550,000 gal/yr
Total	100		21,000,000 gal/yr
PSB Cuts			
Total Shell Tar Throughput for PSB Production:			9,000,000 gal/yr
Light Cut	18	% of total feed	1,620,000 gal/yr
Middle Cut	20	% of total feed	1,800,000 gal/yr
PSB Cut	62	% of total feed	5,580,000 gal/yr
Total	100		9,000,000 gal/yr

Option 3 - Decanted Oil Distillation

Pitch Production:	80	% of feed	Do not cut PSB using Shell
PSB Production:	20	% of feed	
Pitch Cuts			
Total Shell Tar Throughput for Pitch Production:			24,000,000 gal/yr
Light Cut	10	% of total feed	2,400,000 gal/yr
Middle Cut	20	% of total feed	4,800,000 gal/yr
Heavy Oil Cut	15	% of total feed	3,600,000 gal/yr
Pitch Cut	55	% of total feed	13,200,000 gal/yr
Total	100		24,000,000 gal/yr
PSB Cuts			
Total Shell Tar Throughput for PSB Production:			6,000,000 gal/yr
Light Cut	10	% of total feed	600,000 gal/yr
Middle Cut	15	% of total feed	900,000 gal/yr
PSB Cut	75	% of total feed	4,500,000 gal/yr
Total	100		6,000,000 gal/yr

Table 1-1.

2018 Potential Emissions Inventory, Summary of Potential Emissions
Koppers Inc., Follansbee Tar Plant, Follansbee, West Virginia

Pollutant	HAP	POM	Potential Emissions (tons/yr)											
			Boilers	Tube Heaters, Pitch Area (Combustion)	Flare/Thermal Oxidizer (Combustion)	Process Vents	Equipment Leaks	Storage Tanks	Product Loading	Heat-up Losses	Wastewater Treatment	Slop and Pitch Recycling Conveyor	Paved Roadways	Total
PM			11.11	1.801	1.207							0.028	4.232	18.378
PM-10			10.82	1.801	1.207							0.013	0.817	14.657
PM-2.5			10.19	1.801	1.207							0.004	0.223	13.430
NOx			189.70	23.700	20.788									234.193
SO2			54.95	0.142	127.355									182.448
CO			32.27	19.908	24.690									76.870
VOC			2.62	1.304	0.874	0.203	1.188	3.550	5.194	0.064	1.910	0.009		16.915
Benzene	X		0.002	0.000	0.000	0.050	0.060	0.495	0.957	0.013	0.157	0.000		1.735
Biphenyl	X	X				0.000	0.010	0.006	0.037	0.000		0.000		0.053
m-Cresol	X					0.000	0.004	0.008	0.032	0.000		0.000		0.044
o-Cresol	X					0.000	0.003	0.006	0.038	0.000	0.000	0.000		0.048
p-Cresol	X					0.000	0.004	0.007	0.027	0.000	0.000	0.000		0.039
Cumene	X					0.000	0.000	0.000	0.000	0.000		0.000		0.000
Dibenzofuran	X	X				0.000	0.037	0.199	0.162	0.000	0.003	0.001		0.402
Ethylbenzene	X		0.000			0.002	0.002	0.010	0.049	0.000	0.011	0.000		0.074
Naphthalene	X	X	0.003	0.000	0.000	0.062	0.277	0.572	1.494	0.011	0.563	0.001		2.985
Phenol	X					0.000	0.008	0.024	0.044	0.000	0.000	0.000		0.077
Quinoline	X	X				0.000	0.007	0.009	0.032	0.000		0.000		0.049
Styrene	X					0.007	0.005	0.029	0.051	0.000	0.280	0.000		0.373
Toluene	X		0.019	0.001	0.001	0.018	0.023	0.154	0.436	0.004	0.052	0.000		0.706
m-Xylene	X					0.005	0.008	0.052	0.116	0.001	0.005	0.000		0.187
o-Xylene	X		0.000			0.003	0.004	0.023	0.061	0.000		0.000		0.092
p-Xylene	X					0.006	0.008	0.053	0.119	0.001		0.000		0.187
Acenaphthene	X	X				0.001	0.077	0.684	0.483	0.001	0.032	0.004		1.282
Acenaphthylene	X	X				0.000	0.019	0.007	0.042	0.000	0.001	0.000		0.069
Anthracene	X	X				0.000	0.029	0.089	0.044	0.000	0.121	0.001		0.283
Benzo(a)anthracene	X	X				0.000	0.011	0.017	0.012	0.000	0.000	0.000		0.040
Benzo(b)fluoranthene	X	X				0.000	0.016	0.015	0.012	0.000		0.000		0.043
Benzo(k)fluoranthene	X	X				0.000	0.003	0.001	0.001	0.000		0.000		0.005
Benzo(g,h,i)perylene	X	X				0.000	0.004	0.001	0.001	0.000		0.000		0.006
Benzo(a)pyrene	X	X				0.000	0.011	0.003	0.002	0.000		0.000		0.017
Chrysene	X	X				0.000	0.009	0.005	0.003	0.000	0.000	0.000		0.018
Dibenzo(a,h)anthracene	X	X				0.000	0.002	0.000	0.000	0.000		0.000		0.003
Fluoranthene	X	X				0.000	0.042	0.179	0.127	0.000	0.286	0.001		0.634
Fluorene	X	X				0.000	0.040	0.211	0.197	0.000	0.004	0.002		0.454
Indeno(1,2,3-cd)pyrene	X	X				0.000	0.005	0.000	0.000	0.000		0.000		0.005
Phenanthrene	X	X				0.000	0.071	0.180	0.125	0.000	0.069	0.002		0.447
Pyrene	X	X				0.000	0.025	0.056	0.031	0.000	0.000	0.001		0.114
16 PAH minus napthalene	X	X	0.004	0.000	0.000									0.004
Formalehyde	X		0.122	0.018	0.012									0.152
Hexane	X		1.317	0.427	0.286									2.029
HAP Metals	X		0.290	0.001	0.001									0.293
Total HAP			1.757	0.447	0.300	0.155	0.823	3.096	4.261	0.034	1.585	0.012		12.471
Total POM	X		0.007	0.000	0.000	0.063	0.695	2.235	2.467	0.013	1.079	0.013		6.572

Table 1-2.

2018 Potential Emissions Inventory, Summary of Potential Emissions, Sources Venting to the Flare/Thermal Oxidizer Control Devices
Koppers Inc., Follansbee Tar Plant, Follansbee, West Virginia

Potential Emissions (tons/yr)

Pollutant	HAP	POM	#1 Column	#2 Column	Decanters	Petro Tar Loading	PSB, MPSB, RT Loading	Tank 6	Tank 7	Tank 9	Tank 10	Tank 11	Tank 13	Tank 14	Tank 48	Tank 49	Tank 50	Tank 56	Tank 83	Tank 89	Tank 126
VOC			0.123	0.073	0.007	0.002	0.545	0.261	0.011	0.011	0.019	0.004	0.093	0.093	0.261	0.261	0.284	0.044	0.007	0.246	0.000
Benzene	X		0.031	0.018	0.002	0.000	0.000	0.102	0.002	0.002	0.001	0.000	0.000	0.000	0.102	0.102	0.111	0.006	0.000	0.035	0.000
Biphenyl	X	X	0.000	0.000	0.000	0.000	0.014	0.000	0.000	0.000	0.000	0.000	0.001	0.001	0.000	0.000	0.001	0.000	0.000	0.000	0.000
m-Cresol	X		0.000	0.000	0.000	0.000	0.000	0.002	0.000	0.000	0.000	0.000	0.000	0.000	0.002	0.002	0.002	0.000	0.000	0.000	0.000
o-Cresol	X		0.000	0.000	0.000	0.000	0.000	0.001	0.000	0.000	0.000	0.000	0.000	0.000	0.001	0.001	0.002	0.000	0.000	0.000	0.000
p-Cresol	X		0.000	0.000	0.000	0.000	0.000	0.002	0.000	0.000	0.000	0.000	0.000	0.000	0.002	0.002	0.002	0.000	0.000	0.000	0.000
Cumene	X		0.000	0.000	0.000	0.000	0.000	0.000	0.000	0.000	0.000	0.000	0.000	0.000	0.000	0.000	0.000	0.000	0.000	0.000	0.000
Dibenzofuran	X	X	0.000	0.000	0.000	0.000	0.014	0.000	0.000	0.000	0.000	0.000	0.004	0.004	0.000	0.000	0.000	0.000	0.000	0.000	0.000
Ethylbenzene	X		0.001	0.001	0.000	0.000	0.000	0.001	0.000	0.000	0.000	0.000	0.000	0.000	0.001	0.001	0.001	0.000	0.000	0.002	0.000
Naphthalene	X	X	0.037	0.022	0.002	0.001	0.315	0.044	0.004	0.004	0.014	0.000	0.056	0.056	0.044	0.044	0.048	0.019	0.007	0.104	0.000
Phenol	X		0.000	0.000	0.000	0.000	0.000	0.006	0.000	0.000	0.000	0.000	0.000	0.000	0.006	0.006	0.006	0.000	0.000	0.001	0.000
Quinoline	X	X	0.000	0.000	0.000	0.000	0.002	0.001	0.000	0.000	0.000	0.000	0.001	0.001	0.001	0.001	0.001	0.000	0.000	0.001	0.000
Styrene	X		0.004	0.002	0.000	0.000	0.000	0.004	0.000	0.000	0.000	0.000	0.000	0.000	0.004	0.004	0.005	0.001	0.000	0.007	0.000
Toluene	X		0.011	0.006	0.001	0.000	0.000	0.031	0.001	0.001	0.001	0.000	0.000	0.000	0.031	0.031	0.034	0.003	0.000	0.015	0.000
m-Xylene	X		0.003	0.002	0.000	0.000	0.000	0.010	0.000	0.000	0.000	0.000	0.000	0.000	0.010	0.010	0.011	0.001	0.000	0.006	0.000
o-Xylene	X		0.002	0.001	0.000	0.000	0.000	0.004	0.000	0.000	0.000	0.000	0.000	0.000	0.004	0.004	0.005	0.001	0.000	0.003	0.000
p-Xylene	X		0.003	0.002	0.000	0.000	0.000	0.010	0.000	0.000	0.000	0.000	0.000	0.000	0.010	0.010	0.011	0.001	0.000	0.006	0.000
Acenaphthene	X	X	0.000	0.000	0.000	0.000	0.023	0.003	0.000	0.000	0.001	0.000	0.007	0.007	0.002	0.002	0.004	0.000	0.000	0.001	0.000
Acenaphthylene	X	X	0.000	0.000	0.000	0.000	0.011	0.001	0.000	0.000	0.000	0.000	0.000	0.000	0.001	0.001	0.001	0.000	0.000	0.000	0.000
Anthracene	X	X	0.000	0.000	0.000	0.000	0.008	0.000	0.000	0.000	0.000	0.000	0.001	0.001	0.000	0.000	0.000	0.000	0.000	0.000	0.000
Benzo(a)anthracene	X	X	0.000	0.000	0.000	0.000	0.000	0.000	0.000	0.000	0.000	0.000	0.000	0.000	0.000	0.000	0.000	0.000	0.000	0.000	0.000
Benzo(b)fluoranthene	X	X	0.000	0.000	0.000	0.000	0.000	0.000	0.000	0.000	0.000	0.000	0.000	0.000	0.000	0.000	0.000	0.000	0.000	0.000	0.000
Benzo(k)fluoranthene	X	X	0.000	0.000	0.000	0.000	0.000	0.000	0.000	0.000	0.000	0.000	0.000	0.000	0.000	0.000	0.000	0.000	0.000	0.000	0.000
Benzo(g,h,i)perylene	X	X	0.000	0.000	0.000	0.000	0.000	0.000	0.000	0.000	0.000	0.000	0.000	0.000	0.000	0.000	0.000	0.000	0.000	0.000	0.000
Benzo(a)pyrene	X	X	0.000	0.000	0.000	0.000	0.000	0.000	0.000	0.000	0.000	0.000	0.000	0.000	0.000	0.000	0.000	0.000	0.000	0.000	0.000
Chrysene	X	X	0.000	0.000	0.000	0.000	0.000	0.000	0.000	0.000	0.000	0.000	0.000	0.000	0.000	0.000	0.000	0.000	0.000	0.000	0.000
Dibenzo(a,h)anthracene	X	X	0.000	0.000	0.000	0.000	0.000	0.000	0.000	0.000	0.000	0.000	0.000	0.000	0.000	0.000	0.000	0.000	0.000	0.000	0.000
Fluoranthene	X	X	0.000	0.000	0.000	0.000	0.013	0.000	0.000	0.000	0.000	0.000	0.002	0.002	0.000	0.000	0.000	0.000	0.000	0.000	0.000
Fluorene	X	X	0.000	0.000	0.000	0.000	0.028	0.001	0.000	0.000	0.000	0.000	0.004	0.004	0.001	0.001	0.001	0.000	0.000	0.000	0.000
Indeno(1,2,3-cd)pyrene	X	X	0.000	0.000	0.000	0.000	0.000	0.000	0.000	0.000	0.000	0.000	0.000	0.000	0.000	0.000	0.000	0.000	0.000	0.000	0.000
Phenanthrene	X	X	0.000	0.000	0.000	0.000	0.026	0.001	0.000	0.000	0.000	0.000	0.004	0.004	0.000	0.000	0.001	0.000	0.000	0.000	0.000
Pyrene	X	X	0.000	0.000	0.000	0.000	0.002	0.000	0.000	0.000	0.000	0.000	0.000	0.000	0.000	0.000	0.000	0.000	0.000	0.000	0.000
Total HAP			0.094	0.056	0.005	0.002	0.438	0.224	0.008	0.008	0.016	0.000	0.082	0.082	0.224	0.224	0.244	0.033	0.007	0.181	0.000
Total POM			0.038	0.023	0.002	0.002	0.438	0.050	0.004	0.004	0.016	0.000	0.082	0.082	0.050	0.050	0.054	0.019	0.007	0.106	0.000

Table 1-2.

Potential Emissions (tons/yr)

Pollutant	HAP	POM	Tank 221	Tank 222	Tank 223	Tank 224	Tank 363	Tank 406	Tank 407	Slop & Pitch Conveying & Recycling[1]	Total	Total Uncontrolled (assuming 98% Eff)
VOC			0.006	0.006	0.019	0.006	0.000	0.089	0.089	0.002	2.563	128.132
Benzene	X		0.001	0.001	0.001	0.001	0.000	0.000	0.000	0.000	0.519	25.945
Biphenyl	X	X	0.000	0.000	0.000	0.000	0.000	0.001	0.001	0.000	0.020	0.987
m-Cresol	X		0.000	0.000	0.000	0.000	0.000	0.000	0.000	0.000	0.008	0.408
o-Cresol	X		0.000	0.000	0.000	0.000	0.000	0.000	0.000	0.000	0.007	0.362
p-Cresol	X		0.000	0.000	0.000	0.000	0.000	0.000	0.000	0.000	0.008	0.376
Cumene	X		0.000	0.000	0.000	0.000	0.000	0.000	0.000	0.000	0.000	0.000
Dibenzofuran	X	X	0.000	0.000	0.000	0.000	0.000	0.004	0.004	0.000	0.033	1.627
Ethylbenzene	X		0.000	0.000	0.000	0.000	0.000	0.000	0.000	0.000	0.011	0.542
Naphthalene	X	X	0.002	0.002	0.014	0.002	0.000	0.054	0.054	0.001	0.951	47.555
Phenol	X		0.000	0.000	0.000	0.000	0.000	0.000	0.000	0.000	0.024	1.202
Quinoline	X	X	0.000	0.000	0.000	0.000	0.000	0.001	0.001	0.000	0.011	0.542
Styrene	X		0.000	0.000	0.000	0.000	0.000	0.000	0.000	0.000	0.034	1.708
Toluene	X		0.001	0.001	0.001	0.001	0.000	0.000	0.000	0.000	0.168	8.396
m-Xylene	X		0.000	0.000	0.000	0.000	0.000	0.000	0.000	0.000	0.055	2.732
o-Xylene	X		0.000	0.000	0.000	0.000	0.000	0.000	0.000	0.000	0.025	1.239
p-Xylene	X		0.000	0.000	0.000	0.000	0.000	0.000	0.000	0.000	0.056	2.815
Acenaphthene	X	X	0.000	0.000	0.001	0.000	0.000	0.007	0.007	0.000	0.067	3.338
Acenaphthylene	X	X	0.000	0.000	0.000	0.000	0.000	0.000	0.000	0.000	0.018	0.917
Anthracene	X	X	0.000	0.000	0.000	0.000	0.000	0.001	0.001	0.000	0.014	0.688
Benzo(a)anthracene	X	X	0.000	0.000	0.000	0.000	0.000	0.000	0.000	0.000	0.001	0.033
Benzo(b)fluoranthene	X	X	0.000	0.000	0.000	0.000	0.000	0.000	0.000	0.000	0.000	0.010
Benzo(k)fluoranthene	X	X	0.000	0.000	0.000	0.000	0.000	0.000	0.000	0.000	0.000	0.001
Benzo(g,h,i)perylene	X	X	0.000	0.000	0.000	0.000	0.000	0.000	0.000	0.000	0.000	0.000
Benzo(a)pyrene	X	X	0.000	0.000	0.000	0.000	0.000	0.000	0.000	0.000	0.000	0.003
Chrysene	X	X	0.000	0.000	0.000	0.000	0.000	0.000	0.000	0.000	0.000	0.007
Dibenzo(a,h)anthracene	X	X	0.000	0.000	0.000	0.000	0.000	0.000	0.000	0.000	0.000	0.000
Fluoranthene	X	X	0.000	0.000	0.000	0.000	0.000	0.002	0.002	0.000	0.021	1.068
Fluorene	X	X	0.000	0.000	0.000	0.000	0.000	0.004	0.004	0.000	0.051	2.534
Indeno(1,2,3-cd)pyrene	X	X	0.000	0.000	0.000	0.000	0.000	0.000	0.000	0.000	0.000	0.000
Phenanthrene	X	X	0.000	0.000	0.000	0.000	0.000	0.004	0.004	0.000	0.044	2.178
Pyrene	X	X	0.000	0.000	0.000	0.000	0.000	0.000	0.000	0.000	0.004	0.189
Total HAP			0.005	0.005	0.016	0.005	0.000	0.078	0.078	0.001	2.115	105.732
Total POM			0.002	0.002	0.016	0.002	0.000	0.078	0.078	0.001	1.206	60.324

Table 1-3. 2018 Potential Emissions Inventory, Summary of Potential Emissions, Sources Venting to Scrubber E
Koppers Inc., Follansbee Tar Plant, Follansbee, West Virginia

Potential Emissions (tons/yr)

			Scrubber E									
Pollutant	HAP	POM	Pitch Loading	Tank 801	Tank 802	Tank 804	Tank 805	Tank 806	Tank 808	Slop & Pitch Conveying and Recycling Operation[1]	Total Controlled	Total Uncontrolled (assuming 80% DRE)
PM												
PM-10												
PM-2.5												
VOC			0.705	0.258	0.258	0.257	0.254	0.258	0.258	0.007	2.255	11.273
Benzene	X		0.000	0.000	0.000	0.000	0.000	0.000	0.000	0.000	0.000	0.000
Biphenyl	X	X	0.000	0.000	0.000	0.000	0.000	0.000	0.000	0.000	0.000	0.000
m-Cresol	X		0.000	0.000	0.000	0.000	0.000	0.000	0.000	0.000	0.000	0.000
o-Cresol	X		0.000	0.000	0.000	0.000	0.000	0.000	0.000	0.000	0.000	0.000
p-Cresol	X		0.000	0.000	0.000	0.000	0.000	0.000	0.000	0.000	0.000	0.000
Cumene	X		0.000	0.000	0.000	0.000	0.000	0.000	0.000	0.000	0.000	0.000
Dibenzofuran	X	X	0.140	0.030	0.030	0.030	0.030	0.030	0.030	0.001	0.321	1.605
Ethylbenzene	X		0.000	0.000	0.000	0.000	0.000	0.000	0.000	0.000	0.000	0.000
Naphthalene	X	X	0.000	0.000	0.000	0.000	0.000	0.000	0.000	0.000	0.000	0.000
Phenol	X		0.000	0.000	0.000	0.000	0.000	0.000	0.000	0.000	0.000	0.000
Quinoline	X	X	0.000	0.000	0.000	0.000	0.000	0.000	0.000	0.000	0.000	0.000
Styrene	X		0.000	0.000	0.000	0.000	0.000	0.000	0.000	0.000	0.000	0.000
Toluene	X		0.000	0.000	0.000	0.000	0.000	0.000	0.000	0.000	0.000	0.000
m-Xylene	X		0.000	0.000	0.000	0.000	0.000	0.000	0.000	0.000	0.000	0.000
o-Xylene	X		0.000	0.000	0.000	0.000	0.000	0.000	0.000	0.000	0.000	0.000
p-Xylene	X		0.000	0.000	0.000	0.000	0.000	0.000	0.000	0.000	0.000	0.000
Acenaphthene	X	X	0.391	0.108	0.108	0.107	0.106	0.108	0.108	0.004	1.039	5.194
Acenaphthylene	X	X	0.000	0.000	0.000	0.000	0.000	0.000	0.000	0.000	0.000	0.000
Anthracene	X	X	0.034	0.014	0.014	0.014	0.014	0.014	0.014	0.000	0.118	0.591
Benzo(a)anthracene	X	X	0.011	0.003	0.003	0.003	0.003	0.003	0.003	0.000	0.028	0.140
Benzo(b)fluoranthene	X	X	0.012	0.003	0.003	0.003	0.002	0.003	0.003	0.000	0.027	0.134
Benzo(k)fluoranthene	X	X	0.001	0.000	0.000	0.000	0.000	0.000	0.000	0.000	0.002	0.009
Benzo(g,h,i)perylene	X	X	0.001	0.000	0.000	0.000	0.000	0.000	0.000	0.000	0.001	0.007
Benzo(a)pyrene	X	X	0.002	0.001	0.001	0.001	0.001	0.001	0.001	0.000	0.006	0.028
Chrysene	X	X	0.003	0.001	0.001	0.001	0.001	0.001	0.001	0.000	0.008	0.040
Dibenzo(a,h)anthracene	X	X	0.000	0.000	0.000	0.000	0.000	0.000	0.000	0.000	0.001	0.004
Fluoranthene	X	X	0.110	0.028	0.028	0.028	0.028	0.028	0.028	0.001	0.281	1.406
Fluorene	X	X	0.145	0.032	0.032	0.032	0.031	0.032	0.032	0.001	0.336	1.682
Indeno(1,2,3-cd)pyrene	X	X	0.000	0.000	0.000	0.000	0.000	0.000	0.000	0.000	0.000	0.001
Phenanthrene	X	X	0.093	0.027	0.027	0.027	0.027	0.027	0.027	0.001	0.258	1.291
Pyrene	X	X	0.029	0.009	0.009	0.009	0.009	0.009	0.009	0.000	0.084	0.421
Total HAP			0.704	0.256	0.256	0.254	0.251	0.256	0.256	0.007	2.240	11.199
Total POM			0.704	0.256	0.256	0.254	0.251	0.256	0.256	0.008	2.241	11.204

[1] Pitch addition to tanks and pitch loading are controlled by Scrubber E.

Table 2-1. Assumptions for the 2018 Potential Emissions Inventory, Combustion Sources
Koppers Inc., Follansbee Tar Plant, Follansbee, West Virginia

Boiler 2
Rated Capacity (MMBtu/hr) = 50
Fuels = Liquid Fuel

Boiler 3
Rated Capacity (MMBtu/hr) = 75
Fuels = Liquid Fuel
Natural Gas

Boiler 6
Rated Capacity (MMBtu/hr) = 92
Fuels = Natural Gas

Fuel Characterisitics:
Liquid Fuel
Heating Value = 137,000 Btu/gal

Natural Gas
Heating Value = 1,000 Btu/cf

Liquid Fuel is a Solvent produced at the Stickney facility.

#1 Tube Heater
Rated Capacity (MMBtu/hr) = 10
Fuels = Natural Gas

#2 Tube Heater
Rated Capacity (MMBtu/hr) = 10
Fuels = Natural Gas

#31 Tube Heater
Rated Capacity (MMBtu/hr) = 29
Fuels = Natural Gas
Process Gas

Pencil Pitch Hot Oil Heater
Rated Capacity (MMBtu/hr) = 5
Fuels = Natural Gas

Fuel Characterisitics:
Natural Gas
Heating Value = 1,000 Btu/cf

Flares

UFEG Flare	Assist Gas	13,775	scfh, Manufacturer Data	Natural Gas
	Pilot	237	scfh, Manufacturer Data	Heating Value = 1,000 Btu/cf

Thermal Oxidizer
Burner Capacities (MMBtu/hr): 22.3 (3 burners)

Table 2-2. 2018 Revised Potential Emissions Inventory, Boilers, Potential Emissions on Individual Basis
Koppers Inc., Follansbee Tar Plant, Follansbee, West Virginia

				BOILER #2		BOILER #3						BOILER #6		TOTAL	
				Liquid Fuel		Natural Gas		Liquid Fuel				Natural Gas			
Rated Capacity (MMBtu/hr)				50			75					92			
Potential Natural Gas Usage (mmcf/hr)[3]				0		0.075		0				0.092			
Potential Natural Gas Usage (mmcf/yr)[3]				0		657		0				806			
Potential Liquid Fuel Usage (gal/hr)[4]				365		0		547				0			
Potential Liquid Fuel Usage (gal/yr)[4]				3,197,080		0		2,357,143 Limit				0			
	Emission Factors														
Pollutant	Boiler 3 Natural Gas[1] (lb/mmcf)	Boiler 6 Natural Gas[2] (lb/mmcf)	Liquid Fuel[3] (lb/10^3 gal)	Emissions (lb/hr)	Emissions (tons/yr)	Emissions (lb/hr)	Emissions (tons/yr)	Emissions (lb/hr)	Emissions (tons/yr)	Maximum Emissions (lb/hr)	Maximum Emissions (tons/yr)	Emissions (lb/hr)	Emissions (tons/yr)	TOTAL EMISSIONS (lb/hr)	TOTAL EMISSIONS (tons/yr)
PM	10.87	7.6	2.8	1.02	4.48	0.82	3.57	1.53	3.30	1.53	3.57	0.70	3.06	3.25	11.11
PM-10	10.87	7.6	2.62	0.96	4.18	0.82	3.57	1.43	3.09	1.43	3.57	0.70	3.06	3.09	10.82
PM-2.5	10.87	7.6	2.23	0.81	3.56	0.82	3.57	1.22	2.63	1.22	3.57	0.70	3.06	2.73	10.19
NOx	123.6	37.008	62.94	22.97	100.61	9.27	40.60	34.46	74.18	34.46	74.18	3.40	14.91	60.83	189.70
SO2	0.58	0.6	19.70	7.19	31.49	0.04	0.19	10.78	23.22	10.78	23.22	0.06	0.24	18.03	54.95
CO	2.98	76.072	0.4	0.15	0.64	0.22	0.98	0.22	0.47	0.22	0.98	7.00	30.65	7.37	32.27
VOC	0.79	5.5	0.09	0.03	0.14	0.06	0.26	0.05	0.11	0.06	0.26	0.51	2.22	0.60	2.62
Benzene	2.10E-03	2.10E-03	2.14E-04	7.81E-05	3.42E-04	1.58E-04	6.90E-04	1.17E-04	2.52E-04	1.58E-04	6.90E-04	1.93E-04	8.46E-04	0.00	0.00
Ethylbenzene			6.36E-05	2.32E-05	1.02E-04	0.00E+00	0.00E+00	3.48E-05	7.50E-05	3.48E-05	7.50E-05	0.00E+00	0.00E+00	0.00	0.00
Naphthalene	6.10E-04	6.10E-04	1.13E-03	4.12E-04	1.81E-03	4.58E-05	2.00E-04	6.19E-04	1.33E-03	6.19E-04	1.33E-03	5.61E-05	2.46E-04	0.00	0.00
Toluene	3.40E-03	3.40E-03	6.20E-03	2.26E-03	9.91E-03	2.55E-04	1.12E-03	3.39E-03	7.31E-03	3.39E-03	7.31E-03	3.13E-04	1.37E-03	0.01	0.02
o-Xylene			0.000109	3.98E-05	1.74E-04	0.00E+00	0.00E+00	5.97E-05	1.28E-04	5.97E-05	1.28E-04	0.00E+00	0.00E+00	0.00	0.00
POM	8.82E-05	8.82E-05	1.30E-03	4.74E-04	2.08E-03	6.62E-06	2.90E-05	7.12E-04	1.53E-03	7.12E-04	1.53E-03	8.11E-06	3.55E-05	0.00	0.00
Formaldehyde	7.50E-02	7.50E-02	3.30E-02	1.20E-02	5.28E-02	5.63E-03	2.46E-02	1.81E-02	3.89E-02	1.81E-02	3.89E-02	6.90E-03	3.02E-02	0.04	0.12
Hexane	1.80E+00	1.80E+00		0.00E+00	0.00E+00	1.35E-01	5.91E-01	0.00E+00	0.00E+00	1.35E-01	5.91E-01	1.66E-01	7.25E-01	0.30	1.32
Antimony			5.25E-03	1.92E-03	8.39E-03	0.00E+00	0.00E+00	2.87E-03	6.19E-03	2.87E-03	6.19E-03	0.00E+00	0.00E+00	0.00	0.01
Arsenic	2.00E-04	2.00E-04	1.32E-03	4.82E-04	2.11E-03	1.50E-05	6.57E-05	7.23E-04	1.56E-03	7.23E-04	1.56E-03	1.84E-05	8.06E-05	0.00	0.00
Beryllium	1.20E-05	1.20E-05	2.78E-05	1.01E-05	4.44E-05	9.00E-07	3.94E-06	1.52E-05	3.28E-05	1.52E-05	3.28E-05	1.10E-06	4.84E-06	0.00	0.00
Cadmium	1.10E-03	1.10E-03	3.98E-04	1.45E-04	6.36E-04	8.25E-05	3.61E-04	2.18E-04	4.69E-04	2.18E-04	4.69E-04	1.01E-04	4.43E-04	0.00	0.00
Chromium	1.40E-03	1.40E-03	8.45E-04	3.08E-04	1.35E-03	1.05E-04	4.60E-04	4.63E-04	9.96E-04	4.63E-04	9.96E-04	1.29E-04	5.64E-04	0.00	0.00
Cobalt	8.40E-05	8.40E-05	6.02E-03	2.20E-03	9.62E-03	6.30E-06	2.76E-05	3.30E-03	7.10E-03	3.30E-03	7.10E-03	7.73E-06	3.38E-05	0.01	0.02
Lead	0.0005	0.0005	0.00151	5.51E-04	2.41E-03	3.75E-05	1.64E-04	8.27E-04	1.78E-03	8.27E-04	1.78E-03	4.60E-05	2.01E-04	0.00	0.00
Manganese	3.80E-04	3.80E-04	3.00E-03	1.09E-03	4.80E-03	2.85E-05	1.25E-04	1.64E-03	3.54E-03	1.64E-03	3.54E-03	3.50E-05	1.53E-04	0.00	0.01
Mercury	2.60E-04	2.60E-04	1.13E-04	4.12E-05	1.81E-04	1.95E-05	8.54E-05	6.19E-05	1.33E-04	6.19E-05	1.33E-04	2.39E-05	1.05E-04	0.00	0.00
Nickel	2.10E-03	2.10E-03	8.45E-02	3.08E-02	1.35E-01	1.58E-04	6.90E-04	4.63E-02	9.96E-02	4.63E-02	9.96E-02	1.93E-04	8.46E-04	0.08	0.24
Selenium	2.40E-05	2.40E-05	6.83E-04	2.49E-04	1.09E-03	1.80E-06	7.88E-06	3.74E-04	8.05E-04	3.74E-04	8.05E-04	2.21E-06	9.67E-06	0.00	0.00
Total HAP				5.32E-02	2.33E-01	1.42E-01	6.20E-01	7.98E-02	1.72E-01	2.15E-01	7.63E-01	1.74E-01	7.60E-01	0.44	1.76
Total POM				8.87E-04	3.88E-03	5.24E-05	2.29E-04	1.33E-03	2.86E-03	1.33E-03	2.86E-03	6.42E-05	2.81E-04	2.28E-03	7.03E-03

[1] May 2005 stack test data on Boiler #3 for PM filt, NOx, CO, SO2 and VOC. For all other pollutants, emission factors from AP-42, Section 1.4, Natural Gas Combustion, 7/98 were used. PM-10 and PM-2.5 assumed to equal PM.

[2] Emission factors contained in AP-42, Section 1.4, *Natural Gas Combustion*, 7/98.

Boiler #6 NOx and CO factors taken from burner manufacturer's data using a heating value of Natural Gas of 1,028 Btu/cf

[3] May 2005 stack test data on Boiler #3 was used for liquid fuel combustion for PM filt, NOx, CO, SO2 and VOC. For all other pollutants, emission factors from AP-42, Section 1.3, Fuel Oil Combustion, 9/98 (No. 6 fuel oil) were used.

Heating value of liquid fuel = 137,000 Btu/gal, analyzed 6-13-03 and 9-15-03 by Microbac

Heating value of natural gas = 1,000 Btu/cf

Table 2-3. 2018 Revised Potential Emissions Inventory, Combustion Sources, Tube Heaters and Pencil Pitch Combustion Units
Koppers Inc., Follansbee Tar Plant, Follansbee, West Virginia

Pollutant	Emission Factor[1] (lb/mmcf)	#1 Tube Heater		#2 Tube Heater		#31 Tube Heater		Pencil Pitch Hot Oil Heater		Total	
Rated Capacity (MMBtu/hr)		10		10		29		5			
Potential Fuel Usage (mmcf/hr)[3]		0.010		0.010		0.029		0.005			
Potential Fuel Usage (mmcf/yr)		88		88		254		44			
		Emissions		Emissions		Emissions		Emissions		Emissions	
		(lb/hr)	(tons/yr)	(lb/hr)	(tons/yr)	(lb/hr)	(tons/yr)	(lb/hr)	(tons/yr)	(lb/hr)	(tons/yr)
PM[2]	7.6	0.076	0.334	0.076	0.334	0.220	0.965	0.038	0.167	0.410	1.801
PM-10[2]	7.6	0.076	0.334	0.076	0.334	0.220	0.965	0.038	0.167	0.410	1.801
PM-2.5[2]	7.6	0.076	0.334	0.076	0.334	0.220	0.965	0.038	0.167	0.410	1.801
NOx	100	1.000	4.400	1.000	4.400	2.900	12.700	0.500	2.200	5.400	23.700
SO2	0.6	0.006	0.026	0.006	0.026	0.017	0.076	0.003	0.013	0.032	0.142
CO	84	0.840	3.696	0.840	3.696	2.436	10.668	0.420	1.848	4.536	19.908
VOC	5.5	0.055	0.242	0.055	0.242	0.160	0.699	0.028	0.121	0.297	1.304
Benzene	2.10E-03	0.0000	9.24E-05	0.0000	9.24E-05	0.0001	2.67E-04	0.0000	4.62E-05	0.000	0.000
Naphthalene	6.10E-04	0.0000	2.68E-05	0.0000	2.68E-05	0.0000	7.75E-05	0.0000	1.34E-05	0.000	0.000
Toluene	3.40E-03	0.0000	1.50E-04	0.0000	1.50E-04	0.0001	4.32E-04	0.0000	7.48E-05	0.000	0.001
POM	8.82E-05	0.0000	3.88E-06	0.0000	3.88E-06	0.0000	1.12E-05	0.0000	1.94E-06	0.000	0.000
Formaldehyde	7.50E-02	0.0008	3.30E-03	0.0008	3.30E-03	0.0022	9.53E-03	0.0004	1.65E-03	0.004	0.018
Hexane	1.80E+00	0.0180	7.92E-02	0.0180	7.92E-02	0.0522	2.29E-01	0.0090	3.96E-02	0.097	0.427
Arsenic	2.00E-04	0.0000	8.80E-06	0.0000	8.80E-06	0.0000	2.54E-05	0.0000	4.40E-06	0.000	0.000
Beryllium	1.20E-05	0.0000	5.28E-07	0.0000	5.28E-07	0.0000	1.52E-06	0.0000	2.64E-07	0.000	0.000
Cadmium	1.10E-03	0.0000	4.84E-05	0.0000	4.84E-05	0.0000	1.40E-04	0.0000	2.42E-05	0.000	0.000
Chromium	1.40E-03	0.0000	6.16E-05	0.0000	6.16E-05	0.0000	1.78E-04	0.0000	3.08E-05	0.000	0.000
Cobalt	8.40E-05	0.0000	3.70E-06	0.0000	3.70E-06	0.0000	1.07E-05	0.0000	1.85E-06	0.000	0.000
Lead	0.0005	0.0000	2.20E-05	0.0000	2.20E-05	0.0000	6.35E-05	0.0000	1.10E-05	0.000	0.000
Manganese	3.80E-04	0.0000	1.67E-05	0.0000	1.67E-05	0.0000	4.83E-05	0.0000	8.36E-06	0.000	0.000
Mercury	2.60E-04	0.0000	1.14E-05	0.0000	1.14E-05	0.0000	3.30E-05	0.0000	5.72E-06	0.000	0.000
Nickel	2.10E-03	0.0000	9.24E-05	0.0000	9.24E-05	0.0001	2.67E-04	0.0000	4.62E-05	0.000	0.000
Selenium	2.40E-05	0.0000	1.06E-06	0.0000	1.06E-06	0.0000	3.05E-06	0.0000	5.28E-07	0.000	0.000
Total HAP		0.0189	0.0830	0.0189	0.0830	0.0547	0.2397	0.0094	0.0415	0.1019	0.4473
Total POM		0.0000	0.0000	0.0000	0.0000	0.0000	0.0001	0.0000	0.0000	0.0000	0.0002

[1] Emission factors contained in AP-42, Section 1.4, *Natural Gas Combustion,* 7/98.

[2] Emission factor is the sum of condensable and filterable PM.

[3] Heating value of natural gas = 1,000 Btu/cf

Table 2-4. 2018 Potential Emissions Inventory, Combustion Sources, Flare and Thermal Oxidizer
Koppers Inc., Follansbee Tar Plant, Follansbee, West Virginia

Pollutant	Emission Factor[1] (lb/mmcf)	Flare				Thermal Oxidizer				TOTAL	
Rated Capacity (MMBtu/hr)						22.300					
Potential Fuel Usage (mmcf/hr)		0.014				**0.022**					
Potential Fuel Usage (mmcf/yr)		**123**				**195**					
Tar Feed for SO2 Waste Gas Calculation (gal/yr)						**60,000,000**					
		Emission Factor[1]	Units	Emissions (lb/hr)	Emissions (tons/yr)	Emission Factor[1]	Units	Emissions (lb/hr)	Emissions (tons/yr)	Emissions (lb/hr)	Emissions (tons/yr)
PM[2]		7.6	lb/mmcf	0.106	0.466	7.6	lb/mmcf	0.167	0.741	0.274	1.207
PM-10[2]		7.6	lb/mmcf	0.106	0.466	7.6	lb/mmcf	0.167	0.741	0.274	1.207
PM-2.5[2]		7.6	lb/mmcf	0.106	0.466	7.6	lb/mmcf	0.167	0.741	0.274	1.207
NOx		100	lb/mmcf	1.401	6.137	0.15	lb/MMBtu[4]	3.345	14.651	4.746	20.788
SO2[5]		0.6	lb/mmcf	0.008	0.037	0.6	lb/mmcf	29.068	127.319	29.076	127.355
CO		84	lb/mmcf	1.177	5.155	0.2	lb/MMBtu[4]	4.460	19.535	5.637	24.690
VOC		5.5	lb/mmcf	0.077	0.338	5.5	lb/mmcf	0.121	0.536	0.198	0.874
Benzene		2.10E-03	lb/mmcf	0.000	0.000	2.10E-03	lb/mmcf	0.000	0.000	0.000	0.000
Naphthalene		6.10E-04	lb/mmcf	0.000	0.000	6.10E-04	lb/mmcf	0.000	0.000	0.000	0.000
Toluene		3.40E-03	lb/mmcf	0.000	0.000	3.40E-03	lb/mmcf	0.000	0.000	0.000	0.001
POM		8.82E-05	lb/mmcf	0.000	0.000	8.82E-05	lb/mmcf	0.000	0.000	0.000	0.000
Formaldehyde		7.50E-02	lb/mmcf	0.001	0.005	7.50E-02	lb/mmcf	0.002	0.007	0.003	0.012
Hexane		1.80E+00	lb/mmcf	0.025	0.110	1.80E+00	lb/mmcf	0.040	0.176	0.065	0.286
Arsenic		2.00E-04	lb/mmcf	0.000	0.000	2.00E-04	lb/mmcf	0.000	0.000	0.000	0.000
Beryllium		1.20E-05	lb/mmcf	0.000	0.000	1.20E-05	lb/mmcf	0.000	0.000	0.000	0.000
Cadmium		1.10E-03	lb/mmcf	0.000	0.000	1.10E-03	lb/mmcf	0.000	0.000	0.000	0.000
Chromium		1.40E-03	lb/mmcf	0.000	0.000	1.40E-03	lb/mmcf	0.000	0.000	0.000	0.000
Cobalt		8.40E-05	lb/mmcf	0.000	0.000	8.40E-05	lb/mmcf	0.000	0.000	0.000	0.000
Lead		0.0005	lb/mmcf	0.000	0.000	0.0005	lb/mmcf	0.000	0.000	0.000	0.000
Manganese		3.80E-04	lb/mmcf	0.000	0.000	3.80E-04	lb/mmcf	0.000	0.000	0.000	0.000
Mercury		2.60E-04	lb/mmcf	0.000	0.000	2.60E-04	lb/mmcf	0.000	0.000	0.000	0.000
Nickel		2.10E-03	lb/mmcf	0.000	0.000	2.10E-03	lb/mmcf	0.000	0.000	0.000	0.000
Selenium		2.40E-05	lb/mmcf	0.000	0.000	2.40E-05	lb/mmcf	0.000	0.000	0.000	0.000
Total HAP				0.0264	0.1158			0.0415	0.1840	0.068	0.300
Total POM				0.0000	0.0000			0.0000	0.0001	0.000	0.000

[1] Emission factors contained in AP-42, Section 1.4, *Natural Gas Combustion*, 7/98.

[2] Emission factor is the sum of condensable and filterable PM.

[3] Heating value of natural gas = 1,000 Btu/cf

[4] Provided by manufacturer

[5] Additional SO2 from burning of waste gas at the Thermal Oxidizer calculated based on:
Tar Distillation - Assumed burned at Thermal Oxidizer
Assumed Crude Tar Distillation for worst case, but used throughput of all materials processed in Tar Distillation Column

Crude Tar Feed 1 gal basis
10.1 lb/gal

Molecular Weight Sulfur 32 lb/lb-mole
Molecular Weight SO2 64 lb/lb-mole

		% yield by wgt	Throughput lbs/yr	% sulfur	Sulfur lbs/yr	lb-moles
Crude Tar	In		10.100	0.605	0.061	0.002
RCO	Out	20	2.020	0.52	0.011	0.000
Distillate	Out	25	2.525	0.6	0.015	0.000
Pitch	Out	55	5.555	0.6	0.033	0.001

Sulfur In 0.002 lb-moles
Sulfur Out 0.002 lb-moles

Sulfur Remaining 0.000 lb-moles
Assume all sulfur is combusted in oxidizer/flare

$S + O_2$ yields SO_2

SO2 Air Emissions **0.004** lbs SO_2 Emitted/gal Tar Feed
2.12E-06 tons SO_2 Emitted/gal Tar Feed

Crude Tar Analysis In: .56 - .65%
RCO Analysis Out: 0.521
Distillate Analysis Out: .5 - .7%
Pitch Analysis Out: .55 - .65%

Table 3-1. Assumptions for the 2018 Potential Emissions Inventory, Process Vents
Koppers Inc., Follansbee Tar Plant, Follansbee, West Virginia

Process Group	Process Vent	Controls	Destruction Efficiency of the Vent Handling System (%)	System Parameters: TOC Operating Pressure (mmHg)	Exhaust Temp. (F)	Air Leakage Rate (lbs/hr)	Exhaust Flow Rate (acfh)	Maximum Operating Hours	Feedstock		Saturated With Condensate
Tar Refining Unit #1	#1 Column	VP P115/P116, SOT V109 to VHS	98	150	120	20	4,856	8,760	Option 1	Crude Tar	Crude RCO
				1/17/06 meeting, data provided by Carl Mueller					Option 2	Petro Tar	Petro Distillate
									Option 3	Decanted Oil	Decanted Oil Distillate
	#1 Pitch Flash Column	VP, SOT to VHS	98	60	120	20	825	8,760	Option 1	Crude Tar	Crude Heavy Oil
				1/17/06 meeting, data provided by Carl Mueller					Option 2	Petro Tar	Petro Pitch
									Option 3	Decanted Oil	Decanted Oil Pitch
Tar Refining Unit #2	#2 Column	VP P412A/P412B, SOT V421, VHS	98	250	120	20	6,590	8,760	Option 1	Crude Tar	Crude RCO
				1/17/06 meeting, data provided by Carl Mueller					Option 2	Petro Tar	Petro Distillate
									Option 3	Decanted Oil	Decanted Oil Distillate
Decanters - Tar Refining	Decanters 62, 63, 64	VHS	98	atmospheric	110	NA	97	8,760	Option 1	Crude Tar	Crude RCO
				Existing data, verified by Carl Mueller, 1-17-07					Option 2	Petro Tar	Petro Distillate
									Option 3	Decanted Oil	Decanted Oil Distillate

VP = Vacuum Pumps
SOT = Seal Oil Tank
VHS = Vent Handling System = Flare or Thermal Oxidizer

Table 3-2. 2018 Potential Emissions Inventory, Summary of Potential Emissions, Process Vents
Koppers Inc., Follansbee Tar Plant, Follansbee, West Virginia

	Potential Emissions (tons/yr)				
Pollutant	#1 Column	#1 Pitch Flash Column	#2 Column	Tar Refining Decanters	Total
PM					0.000
PM-10					0.000
PM-2.5					0.000
VOC	0.123	0.000	0.073	0.007	0.203
Benzene	0.031	0.000	0.018	0.002	0.050
Biphenyl	0.000	0.000	0.000	0.000	0.000
m-Cresol	0.000	0.000	0.000	0.000	0.000
o-Cresol	0.000	0.000	0.000	0.000	0.000
p-Cresol	0.000	0.000	0.000	0.000	0.000
Cumene	0.000	0.000	0.000	0.000	0.000
Dibenzofuran	0.000	0.000	0.000	0.000	0.000
Ethylbenzene	0.001	0.000	0.001	0.000	0.002
Naphthalene	0.037	0.000	0.022	0.002	0.062
Phenol	0.000	0.000	0.000	0.000	0.000
Quinoline	0.000	0.000	0.000	0.000	0.000
Styrene	0.004	0.000	0.002	0.000	0.007
Toluene	0.011	0.000	0.006	0.001	0.018
m-Xylene	0.003	0.000	0.002	0.000	0.005
o-Xylene	0.002	0.000	0.001	0.000	0.003
p-Xylene	0.003	0.000	0.002	0.000	0.006
Acenaphthene	0.000	0.000	0.000	0.000	0.001
Acenaphthylene	0.000	0.000	0.000	0.000	0.000
Anthracene	0.000	0.000	0.000	0.000	0.000
Benzo(a)anthracene	0.000	0.000	0.000	0.000	0.000
Benzo(b)fluoranthene	0.000	0.000	0.000	0.000	0.000
Benzo(k)fluoranthene	0.000	0.000	0.000	0.000	0.000
Benzo(g,h,i)perylene	0.000	0.000	0.000	0.000	0.000
Benzo(a)pyrene	0.000	0.000	0.000	0.000	0.000
Chrysene	0.000	0.000	0.000	0.000	0.000
Dibenzo(a,h)anthracene	0.000	0.000	0.000	0.000	0.000
Fluoranthene	0.000	0.000	0.000	0.000	0.000
Fluorene	0.000	0.000	0.000	0.000	0.000
Indeno(1,2,3-cd)pyrene	0.000	0.000	0.000	0.000	0.000
Phenanthrene	0.000	0.000	0.000	0.000	0.000
Pyrene	0.000	0.000	0.000	0.000	0.000
Total HAP	0.094	0.000	0.056	0.005	0.155
Total POM	0.038	0.000	0.023	0.002	0.063

Table 3-3. 2018 Potential Emissions Inventory, Tar Refining Unit #1, #1 Column Vent and #1 Pitch Flash Column Vent
Koppers Inc., Follansbee Tar Plant, Follansbee, West Virginia

Calculation Procedure

$S_e = MW_i * (L_a/29) * (P_{system}/(P_{system} - P_i) - 1)$

where:
S_e = VOC Emissions, lb/hr
MWi = Molecular weight of VOC, lb/lb-mol
La = Total air leakage rate in the system, lb/hr
P_{system} = Pressure of receiving vessel or ejector outlet conditions, mmHg
P_i = Vapor pressure of VOC at receiver temperature, mmHg
29 = Molecular weight of air, lb/lb-mol

Input Data

		#1 Column			#1 Pitch Flash Column		
Air Leak Rate, L_a		20 lb/hr			20 lb/hr		
System Pressure, P_{system}		150 mmHg			60 mmHg		
Temperature, Vacuum Outlet		120 F			120 F		
Maximum Operating Hours		8,760 hrs/yr			8,760 hrs/yr		
Controls		VP P115/P116, SOT V109 to VHS			VP, SOT to VHS		
Control Efficiency		98 %			98 %		
		Saturated with					
VOC Molecular Weight, MWi	Option 1	Crude RCO	103.78 lb/lb-mole		Crude Heavy Oil	166.71 lb/lb-mole	
	Option 2	Petro Distillate	102.17 lb/lb-mole		Petro Pitch	157.32 lb/lb-mole	
	Option 3	Decanted Oil Distillate	147.10 lb/lb-mole		Decanted Oil Pitch	157.32 lb/lb-mole	
VOC Vapor Pressure, Pi	Option 1	Crude RCO	0.0558 psia	2.886 mmHg	Crude Heavy Oil	1.3E-05 psia	0.001 mmHg
	Option 2	Petro Distillate	0.0166 psia	0.858 mmHg	Petro Pitch	2.5E-05 psia	0.001 mmHg
	Option 3	Decanted Oil Distillate	0.0020 psia	0.102 mmHg	Decanted Oil Pitch	2.5E-05 psia	0.001 mmHg

Emission Calculations

	#1 Column Vent											#1 Pitch Flash Column Vent										
	Option 1 - Crude Tar Distillation			Option 2 - Petro Tar Distillation			Option 3 - Decanted Oil Distillation			Maximum Potential Emissions		Option 1 - Crude Tar Distillation			Option 2 - Petro Tar Distillation			Option 3 - Decanted Oil Distillation			Maximum Potential Emissions	
Pollutant	% in Vapor	(lb/hr)	(tons/yr)	% in Vapor	Se (lb/hr)	(tons/yr)	% in Vapor	Se (lb/hr)	(tons/yr)	(lbs/hr)	(tons/yr)	% in Vapor	(lb/hr)	(tons/yr)	% in Vapor	Se (lb/hr)	(tons/yr)	% in Vapor	Se (lb/hr)	(tons/yr)	(lbs/hr)	(tons/yr)
VOC		0.028	0.123		0.008	0.035		0.001	0.006	0.028	0.123		0.000	0.000		0.000	0.000		0.000	0.000	0.000	0.000
Benzene	24.833	0.007	0.031	26.945	0.002	0.010	0.000	0.000	0.000	0.007	0.031	0.000	0.000	0.000	0.000	0.000	0.000	0.000	0.000	0.000	0.000	0.000
Biphenyl	0.061	0.000	0.000	0.402	0.000	0.000	0.233	0.000	0.000	0.000	0.000	0.000	0.000	0.000	0.000	0.000	0.000	0.000	0.000	0.000	0.000	0.000
m-Cresol	0.088	0.000	0.000	0.549	0.000	0.000	0.221	0.000	0.000	0.000	0.000	0.000	0.000	0.000	0.000	0.000	0.000	0.000	0.000	0.000	0.000	0.000
o-Cresol	0.000	0.000	0.000	0.789	0.000	0.000	0.572	0.000	0.000	0.000	0.000	0.000	0.000	0.000	0.000	0.000	0.000	0.000	0.000	0.000	0.000	0.000
p-Cresol	0.065	0.000	0.000	0.405	0.000	0.000	0.163	0.000	0.000	0.000	0.000	0.000	0.000	0.000	0.000	0.000	0.000	0.000	0.000	0.000	0.000	0.000
Cumene	0.000	0.000	0.000	0.000	0.000	0.000	0.000	0.000	0.000	0.000	0.000	0.000	0.000	0.000	0.000	0.000	0.000	0.000	0.000	0.000	0.000	0.000
Dibenzofuran	0.016	0.000	0.000	0.062	0.000	0.000	0.047	0.000	0.000	0.000	0.000	0.000	0.000	0.000	0.000	0.000	0.000	0.000	0.000	0.000	0.000	0.000
Ethylbenzene	1.204	0.000	0.001	0.000	0.000	0.000	12.433	0.000	0.001	0.000	0.001	0.000	0.000	0.000	0.000	0.000	0.000	0.000	0.000	0.000	0.000	0.000
Naphthalene	30.463	0.009	0.037	25.063	0.002	0.009	6.641	0.000	0.000	0.009	0.037	0.000	0.000	0.000	0.000	0.000	0.000	0.000	0.000	0.000	0.000	0.000
Phenol	0.131	0.000	0.000	0.326	0.000	0.000	0.225	0.000	0.000	0.000	0.000	0.000	0.000	0.000	0.000	0.000	0.000	0.000	0.000	0.000	0.000	0.000
Quinoline	0.201	0.000	0.000	0.658	0.000	0.000	0.120	0.000	0.000	0.000	0.000	0.000	0.000	0.000	0.000	0.000	0.000	0.000	0.000	0.000	0.000	0.000
Styrene	3.302	0.001	0.004	1.107	0.000	0.000	0.000	0.000	0.000	0.001	0.004	0.000	0.000	0.000	0.000	0.000	0.000	0.000	0.000	0.000	0.000	0.000
Toluene	8.818	0.002	0.011	15.983	0.001	0.006	0.000	0.000	0.000	0.002	0.011	0.000	0.000	0.000	0.000	0.000	0.000	0.000	0.000	0.000	0.000	0.000
m-Xylene	2.684	0.001	0.003	2.912	0.000	0.001	7.041	0.000	0.000	0.001	0.003	0.000	0.000	0.000	0.000	0.000	0.000	0.000	0.000	0.000	0.000	0.000
o-Xylene	1.451	0.000	0.002	1.771	0.000	0.001	2.854	0.000	0.000	0.000	0.002	0.000	0.000	0.000	0.000	0.000	0.000	0.000	0.000	0.000	0.000	0.000
p-Xylene	2.805	0.001	0.003	3.044	0.000	0.001	7.359	0.000	0.000	0.001	0.003	0.000	0.000	0.000	0.000	0.000	0.000	0.000	0.000	0.000	0.000	0.000
Acenaphthene	0.171	0.000	0.000	0.784	0.000	0.000	0.203	0.000	0.000	0.000	0.000	67.761	0.000	0.000	77.857	0.000	0.000	77.857	0.000	0.000	0.000	0.000
Acenaphthylene	0.073	0.000	0.000	0.587	0.000	0.000	0.312	0.000	0.000	0.000	0.000	0.000	0.000	0.000	0.000	0.000	0.000	0.000	0.000	0.000	0.000	0.000
Anthracene	0.001	0.000	0.000	0.007	0.000	0.000	0.002	0.000	0.000	0.000	0.000	0.470	0.000	0.000	0.642	0.000	0.000	0.642	0.000	0.000	0.000	0.000
Benzo(a)anthracene	0.000	0.000	0.000	0.000	0.000	0.000	0.000	0.000	0.000	0.000	0.000	0.131	0.000	0.000	0.003	0.000	0.000	0.003	0.000	0.000	0.000	0.000
Benzo(b)fluoranthene	0.000	0.000	0.000	0.000	0.000	0.000	0.000	0.000	0.000	0.000	0.000	0.049	0.000	0.000	0.000	0.000	0.000	0.000	0.000	0.000	0.000	0.000
Benzo(k)fluoranthene	0.000	0.000	0.000	0.000	0.000	0.000	0.000	0.000	0.000	0.000	0.000	0.000	0.000	0.000	0.000	0.000	0.000	0.000	0.000	0.000	0.000	0.000
Benzo(g,h,i)perylene	0.000	0.000	0.000	0.000	0.000	0.000	0.000	0.000	0.000	0.000	0.000	0.000	0.000	0.000	0.000	0.000	0.000	0.000	0.000	0.000	0.000	0.000
Benzo(a)pyrene	0.000	0.000	0.000	0.000	0.000	0.000	0.000	0.000	0.000	0.000	0.000	0.002	0.000	0.000	0.000	0.000	0.000	0.000	0.000	0.000	0.000	0.000
Chrysene	0.000	0.000	0.000	0.000	0.000	0.000	0.000	0.000	0.000	0.000	0.000	0.003	0.000	0.000	0.000	0.000	0.000	0.000	0.000	0.000	0.000	0.000
Dibenzo(a,h)anthracene	0.000	0.000	0.000	0.000	0.000	0.000	0.000	0.000	0.000	0.000	0.000	0.000	0.000	0.000	0.000	0.000	0.000	0.000	0.000	0.000	0.000	0.000
Fluoranthene	0.001	0.000	0.000	0.010	0.000	0.000	0.010	0.000	0.000	0.000	0.000	29.432	0.000	0.000	1.268	0.000	0.000	1.268	0.000	0.000	0.000	0.000
Fluorene	0.048	0.000	0.000	0.206	0.000	0.000	0.169	0.000	0.000	0.000	0.000	0.000	0.000	0.000	18.569	0.000	0.000	18.569	0.000	0.000	0.000	0.000
Indeno(1,2,3-cd)pyrene	0.000	0.000	0.000	0.000	0.000	0.000	0.000	0.000	0.000	0.000	0.000	0.000	0.000	0.000	0.000	0.000	0.000	0.000	0.000	0.000	0.000	0.000
Phenanthrene	0.003	0.000	0.000	0.025	0.000	0.000	0.011	0.000	0.000	0.000	0.000	1.476	0.000	0.000	1.554	0.000	0.000	1.554	0.000	0.000	0.000	0.000
Pyrene	0.000	0.000	0.000	0.000	0.000	0.000	0.001	0.000	0.000	0.000	0.000	0.625	0.000	0.000	0.050	0.000	0.000	0.050	0.000	0.000	0.000	0.000
Total HAP		0.021	0.094		0.007	0.029		0.001	0.002	0.021	0.094		0.000	0.000		0.000	0.000		0.000	0.000	0.000	0.000
Total POM		0.009	0.038		0.002	0.010		0.000	0.000	0.009	0.038		0.000	0.000		0.000	0.000		0.000	0.000	0.000	0.000

VP = Vacuum Pumps
SOT = Seal Oil Tank
VHS = Vent Handling System = Flare or Thermal Oxidizer

Table 3-4. 2018 Potential Emissions Inventory, Tar Refining Unit #2, #2 Column Vent
Koppers Inc., Follansbee Tar Plant, Follansbee, West Virginia

Calculation Procedure

$S_e = MW_i * (L_a/29) * (P_{system}/(P_{system} - P_i) - 1)$

where:
S_e = VOC Emissions, lb/hr
MWi = Molecular weight of VOC, lb/lb-mol
La = Total air leakage rate in the system, lb/hr
P_{system} = Pressure of receiving vessel or ejector outlet conditions, mmHg
P_i = Vapor pressure of VOC at receiver temperature, mmHg
29 = Molecular weight of air, lb/lb-mol

Input Data

		#2 Column		
Air Leak Rate, L_a		20 lb/hr		
System Pressure, P_{system}		250 mmHg		
Temperature, Vacuum Outlet		120 F		
Maximum Operating Hours		8,760 hrs/yr		
Controls		VP P412A/P412B, SOT V421, VHS		
Control Efficiency		98 %		
		Saturated with:		
VOC Molecular Weight, MWi	Option 1	Crude RCO	103.78 lb/lb-mole	
	Option 2	Petro Distillate	102.17 lb/lb-mole	
	Option 3	Decanted Oil Distillate	147.10 lb/lb-mole	
VOC Vapor Pressure, Pi	Option 1	Crude RCO	0.0558 psia	2.886 mmHg
	Option 2	Petro Distillate	0.0166 psia	0.858 mmHg
	Option 3	Decanted Oil Distillate	0.0020 psia	0.102 mmHg

Emission Calculations

	#2 Column Vent										
	Option 1 - Crude Tar Distillation			Option 2 - Petro Tar Distillation			Option 3 - Decanted Tar Distillation			Maximum Potential Emissions	
Pollutant	% in Vapor	Se (lb/hr)	Se (tons/yr)	% in Vapor	Se (lb/hr)	Se (tons/yr)	% in Vapor	Se (lb/hr)	Se (tons/yr)	(lbs/hr)	(tons/yr)
VOC		0.017	0.073		0.005	0.021		0.001	0.004	0.017	0.073
Benzene	24.833	0.004	0.018	26.945	0.001	0.006	0.000	0.000	0.000	0.004	0.018
Biphenyl	0.061	0.000	0.000	0.402	0.000	0.000	0.233	0.000	0.000	0.000	0.000
m-Cresol	0.088	0.000	0.000	0.549	0.000	0.000	0.221	0.000	0.000	0.000	0.000
o-Cresol	0.000	0.000	0.000	0.789	0.000	0.000	0.572	0.000	0.000	0.000	0.000
p-Cresol	0.065	0.000	0.000	0.405	0.000	0.000	0.163	0.000	0.000	0.000	0.000
Cumene	0.000	0.000	0.000	0.000	0.000	0.000	0.000	0.000	0.000	0.000	0.000
Dibenzofuran	0.016	0.000	0.000	0.062	0.000	0.000	0.047	0.000	0.000	0.000	0.000
Ethylbenzene	1.204	0.000	0.001	0.000	0.000	0.000	12.433	0.000	0.000	0.000	0.001
Naphthalene	30.463	0.005	0.022	25.063	0.001	0.005	6.641	0.000	0.000	0.005	0.022
Phenol	0.131	0.000	0.000	0.326	0.000	0.000	0.225	0.000	0.000	0.000	0.000
Quinoline	0.201	0.000	0.000	0.658	0.000	0.000	0.120	0.000	0.000	0.000	0.000
Styrene	3.302	0.001	0.002	1.107	0.000	0.000	0.000	0.000	0.000	0.001	0.002
Toluene	8.818	0.001	0.006	15.983	0.001	0.003	0.000	0.000	0.000	0.001	0.006
m-Xylene	2.684	0.000	0.002	2.912	0.000	0.001	7.041	0.000	0.000	0.000	0.002
o-Xylene	1.451	0.000	0.001	1.771	0.000	0.000	2.854	0.000	0.000	0.000	0.001
p-Xylene	2.805	0.000	0.002	3.044	0.000	0.001	7.359	0.000	0.000	0.000	0.002
Acenaphthene	0.171	0.000	0.000	0.784	0.000	0.000	0.203	0.000	0.000	0.000	0.000
Acenaphthylene	0.073	0.000	0.000	0.587	0.000	0.000	0.312	0.000	0.000	0.000	0.000
Anthracene	0.001	0.000	0.000	0.007	0.000	0.000	0.002	0.000	0.000	0.000	0.000
Benzo(a)anthracene	0.000	0.000	0.000	0.000	0.000	0.000	0.000	0.000	0.000	0.000	0.000
Benzo(b)fluoranthene	0.000	0.000	0.000	0.000	0.000	0.000	0.000	0.000	0.000	0.000	0.000
Benzo(k)fluoranthene	0.000	0.000	0.000	0.000	0.000	0.000	0.000	0.000	0.000	0.000	0.000
Benzo(g,h,i)perylene	0.000	0.000	0.000	0.000	0.000	0.000	0.000	0.000	0.000	0.000	0.000
Benzo(a)pyrene	0.000	0.000	0.000	0.000	0.000	0.000	0.000	0.000	0.000	0.000	0.000
Chrysene	0.000	0.000	0.000	0.000	0.000	0.000	0.000	0.000	0.000	0.000	0.000
Dibenzo(a,h)anthracene	0.000	0.000	0.000	0.000	0.000	0.000	0.000	0.000	0.000	0.000	0.000
Fluoranthene	0.001	0.000	0.000	0.010	0.000	0.000	0.010	0.000	0.000	0.000	0.000
Fluorene	0.048	0.000	0.000	0.206	0.000	0.000	0.169	0.000	0.000	0.000	0.000
Indeno(1,2,3-cd)pyrene	0.000	0.000	0.000	0.000	0.000	0.000	0.000	0.000	0.000	0.000	0.000
Phenanthrene	0.003	0.000	0.000	0.025	0.000	0.000	0.011	0.000	0.000	0.000	0.000
Pyrene	0.000	0.000	0.000	0.000	0.000	0.000	0.001	0.000	0.000	0.000	0.000
Total HAP		0.013	0.056		0.004	0.017		0.000	0.001	0.013	0.056
Total POM		0.005	0.023		0.001	0.006		0.000	0.000	0.005	0.023

VP = Vacuum Pumps
SOT = Seal Oil Tank
VHS = Vent Handling System = Flare or Thermal Oxidizer

Table 3-5. 2018 Potential Emissions Inventory, Tar Refining Units, Tar Decanters 63, 64, 65
Koppers Inc., Follansbee Tar Plant, Follansbee, West Virginia

Calculation Procedure

Assumed a saturated exhaust vapor with light ends at the operating temperature after the last condenser

VOC Emissions = Exhaust Flow (scfh) x Vapor Pressure/14.7 x Molecular Weight /385 cf/lb-mol

HAP Emissions = VOC Emissions (lbs/hr) x VOC vapor % by weight (%)/100

Input Data

Operating Temperature			110	F, Engineering Estimate
Exhaust Flowrate			97	scfh, Design Flow Rate
Controls			VHS	
Control Efficiency			98	%
Maximum Operating Hours			8,760	hrs/yr
VOC Molecular Weight		Saturated with		
	Option 1	Crude RCO	102.79	lb/lb-mole
	Option 2	Petro Distillate	100.97	lb/lb-mole
	Option 3	Decanted Oil Distillate	145.14	lb/lb-mole
VOC Vapor Pressure	Option 1	Crude RCO	0.0426	psia
	Option 2	Petro Distillate	0.0127	psia
	Option 3	Decanted Oil Distillate	0.0014	psia

Emissions Calculations

	Option 1 - Crude Tar Distillation			Option 2 - Petro Tar Distillation			Option 3 - Decanted Oil Distillation			Maximum Potential Emissions	
Compound	vapors % by weight	Hourly Emissions (lb/hr)	Annual Emissions (tons/yr)	vapors % by weight	Hourly Emissions (lb/hr)	Annual Emissions (tons/yr)	vapors % by weight	Hourly Emissions (lb/hr)	Annual Emissions (tons/yr)	(lbs/hr)	(tons/yr)
VOC	-	0.002	0.007	-	0.000	0.002	-	0.000	0.000	0.002	0.007
Benzene	26.449	0.000	0.002	28.709	0.000	0.001	0.000	0.000	0.000	0.000	0.002
Biphenyl	0.054	0.000	0.000	0.357	0.000	0.000	0.219	0.000	0.000	0.000	0.000
m-Cresol	0.081	0.000	0.000	0.502	0.000	0.000	0.215	0.000	0.000	0.000	0.000
o-Cresol	0.000	0.000	0.000	0.729	0.000	0.000	0.560	0.000	0.000	0.000	0.000
p-Cresol	0.059	0.000	0.000	0.364	0.000	0.000	0.156	0.000	0.000	0.000	0.000
Cumene	0.000	0.000	0.000	0.000	0.000	0.000	0.000	0.000	0.000	0.000	0.000
Dibenzofuran	0.013	0.000	0.000	0.053	0.000	0.000	0.042	0.000	0.000	0.000	0.000
Ethylbenzene	1.224	0.000	0.000	0.000	0.000	0.000	13.411	0.000	0.000	0.000	0.000
Naphthalene	28.905	0.000	0.002	23.790	0.000	0.000	6.681	0.000	0.000	0.000	0.002
Phenol	0.120	0.000	0.000	0.300	0.000	0.000	0.220	0.000	0.000	0.000	0.000
Quinoline	0.187	0.000	0.000	0.613	0.000	0.000	0.119	0.000	0.000	0.000	0.000
Styrene	3.323	0.000	0.000	1.114	0.000	0.000	0.000	0.000	0.000	0.000	0.000
Toluene	9.205	0.000	0.001	16.691	0.000	0.000	0.000	0.000	0.000	0.000	0.001
m-Xylene	2.722	0.000	0.000	2.954	0.000	0.000	7.571	0.000	0.000	0.000	0.000
o-Xylene	1.465	0.000	0.000	1.788	0.000	0.000	3.056	0.000	0.000	0.000	0.000
p-Xylene	2.850	0.000	0.000	3.094	0.000	0.000	7.928	0.000	0.000	0.000	0.000
Acenaphthene	0.156	0.000	0.000	0.717	0.000	0.000	0.197	0.000	0.000	0.000	0.000
Acenaphthylene	0.066	0.000	0.000	0.537	0.000	0.000	0.303	0.000	0.000	0.000	0.000
Anthracene	0.000	0.000	0.000	0.006	0.000	0.000	0.002	0.000	0.000	0.000	0.000
Benzo(a)anthracene	0.000	0.000	0.000	0.000	0.000	0.000	0.000	0.000	0.000	0.000	0.000
Benzo(b)fluoranthene	0.000	0.000	0.000	0.000	0.000	0.000	0.000	0.000	0.000	0.000	0.000
Benzo(k)fluoranthene	0.000	0.000	0.000	0.000	0.000	0.000	0.000	0.000	0.000	0.000	0.000
Benzo(g,h,i)perylene	0.000	0.000	0.000	0.000	0.000	0.000	0.000	0.000	0.000	0.000	0.000
Benzo(a)pyrene	0.000	0.000	0.000	0.000	0.000	0.000	0.000	0.000	0.000	0.000	0.000
Chrysene	0.000	0.000	0.000	0.000	0.000	0.000	0.000	0.000	0.000	0.000	0.000
Dibenzo(a,h)anthracene	0.000	0.000	0.000	0.000	0.000	0.000	0.000	0.000	0.000	0.000	0.000
Fluoranthene	0.001	0.000	0.000	0.009	0.000	0.000	0.009	0.000	0.000	0.000	0.000
Fluorene	0.043	0.000	0.000	0.185	0.000	0.000	0.161	0.000	0.000	0.000	0.000
Indeno(1,2,3-cd)pyrene	0.000	0.000	0.000	0.000	0.000	0.000	0.000	0.000	0.000	0.000	0.000
Phenanthrene	0.002	0.000	0.000	0.020	0.000	0.000	0.009	0.000	0.000	0.000	0.000
Pyrene	0.000	0.000	0.000	0.000	0.000	0.000	0.001	0.000	0.000	0.000	0.000
Total HAP		0.001	0.005		0.000	0.002		0.000	0.000	0.001	0.005
Total POM		0.000	0.002		0.000	0.001		0.000	0.000	0.000	0.002

VHS = Vent Handling System = Flare or Thermal Oxidizer

Table 4-1. Assumptions for the 2018 Potential Emissions Inventory, Equipment Leaks
Koppers Inc., Follansbee Tar Plant, Follansbee, West Virginia.

Potential Hours: 8,760 hrs/yr

Commodity		Estimated Component Count						
		P/C	Ag	V	PRV	OEL	FL [1]	Total
		Estimated Component Count						
Crude Tar/Petro Tar/ Decant Oil	HL	35	2	662	2	168	2,040	2,909
	Gas	5	2	177	6	48	602	840
Crude RCO	HL	7	2	110	2	30	344	495
	Gas	0	0	47	3	16	146	212
Crude/Petro/Decant Distillate	HL	0	0	12	0	3	50	65
	Gas	0	0	4	1	1	10	16
CTP, Type A Pitch, Petro Pitch, or Decant Pitch	HL	3	1	72	2	13	197	288
	Gas	2	3	59	3	16	214	297
PSB or MPSB	HL	2	0	41	1	10	133	187
	Gas	0	2	33	3	2	121	161
Thermal Oxidizer Condensate	HL	1	0	12	0	3	46	62
	Gas	0	0	2	2	1	13	18
Solvent/Liquid Fuel	HL	1	1	70	0	29	198	299
	Gas	0	0	31	0	8	90	129
NSR	HL	1	0	51	0	17	128	197
	Gas	0	0	15	2	1	55	73
Petro Distillate	HL	0	0	31	0	6	119	156
	Gas	3	0	67	5	66	86	227
Naphthalene	HL	1	0	46	0	4	146	197
	Gas	0	0	3	0	0	12	15
TOTAL		61	13	1,545	32	442	4,750	6,843

[1] Flanges include flanges, connectors, screw connectors, instrumentation, manways, and gate/access hatches.

[2] Count from the Plant-wide Fugitive Emissions Monitoring Program.

Table 4-2.

2018 Potential Emissions Inventory, Equipmnet Leaks, VOC Emissions
Koppers Inc., Follansbee Tar Plant, Follansbee, West Virginia

Commodity		Potential Operating Hours	Number of Equipment Type						TOC Potential Emissions (lb/hr)							TOC Potential Emissions (tons/yr)						
			P/C	Ag	V	PRV	OEL	FL	P/C	Ag	V	PRV	OEL	FL	TOTAL	P/C	Ag	V	PRV	OEL	FL	TOTAL
Crude Tar/Petro Tar/ Decant Oil	HL	8,760	35	2	662	2	168	2,040	1.6E-02	3.3E-03	2.7E-02	3.1E-04		7.0E-02	1.2E-01	0.070	0.015	0.119	0.001		0.306	0.510
	Gas	8,760	5	2	177	6	48	602	2.3E-03	3.3E-03	3.6E-03	9.4E-04		2.1E-02	3.1E-02	0.010	0.015	0.016	0.004		0.090	0.134
Crude RCO	HL	8,760	7	2	110	2	30	344	3.2E-03	3.3E-03	4.5E-03	3.1E-04		1.2E-02	2.3E-02	0.014	0.015	0.020	0.001		0.052	0.101
	Gas	8,760			47	3	16	146			9.5E-04	4.7E-04		5.0E-03	6.4E-03			0.004	0.002		0.022	0.028
Crude/Petro/Decant Oil Distillate	HL	8,760			12		3	50			4.9E-04			1.7E-03	2.2E-03			0.002			0.007	0.010
	Gas	8,760			4	1	1	10			8.1E-05	1.6E-04		3.4E-04	5.8E-04			0.000	0.001		0.001	0.003
CTP, Type A, Petro, Decant Pitch	HL	8,760	3	1	72	2	13	197	1.4E-03	1.7E-03	3.0E-03	3.1E-04		6.7E-03	1.3E-02	0.006	0.007	0.013	0.001		0.030	0.057
	Gas	8,760	2	3	59	3	16	214	9.1E-04	5.0E-03	1.2E-03	4.7E-04		7.3E-03	1.5E-02	0.004	0.022	0.005	0.002		0.032	0.065
PSB or MPSB	HL	8,760	2		41	1	10	133	9.1E-04		1.7E-03	1.6E-04		4.5E-03	7.3E-03	0.004		0.007	0.001		0.020	0.032
	Gas	8,760		2	33	3	2	121		3.3E-03	6.6E-04	4.7E-04		4.1E-03	8.6E-03		0.015	0.003	0.002		0.018	0.038
Thermal Oxidizer Condensate	HL	8,760	1		12		3	46	4.6E-04		4.9E-04			1.6E-03	2.5E-03	0.002		0.002			0.007	0.011
	Gas	8,760			2	2	1	13			4.0E-05	3.1E-04		4.4E-04	8.0E-04			0.000	0.001		0.002	0.003
Solvent/Liquid Fuel	HL	8,760	1	1	70		29	198	4.6E-04	1.7E-03	2.9E-03			6.8E-03	1.2E-02	0.002	0.007	0.013			0.030	0.052
	Gas	8,760			31		8	90			6.2E-04			3.1E-03	3.7E-03			0.003			0.013	0.016
NSR	HL	8,760	1		51		17	128	4.6E-04		2.1E-03			4.4E-03	6.9E-03	0.002		0.009			0.019	0.030
	Gas	8,760			15	2	1	55			3.0E-04	3.1E-04		1.9E-03	2.5E-03			0.001	0.001		0.008	0.011
Petro Distillate	HL	8,760			31		6	119			1.3E-03			4.1E-03	5.3E-03			0.006			0.018	0.023
	Gas	8,760	3		67	5	66	86	1.4E-03		1.3E-03	7.8E-04		2.9E-03	6.4E-03	0.006		0.006	0.003		0.013	0.028
Naphthalene	HL	8,760	1		46		4	146	4.6E-04		1.9E-03			5.0E-03	7.3E-03	0.002		0.008			0.022	0.032
	Gas	8,760			3			12			6.0E-05			4.1E-04	4.7E-04			0.000			0.002	0.002
TOTAL			61	13	1,545	32	442	4,750							0.271							1.188

1. The Correlation Approach in EPA 453/R-95-017, *"Protocol for Equipment Leak Emission Estimates"*, November 1995, will be used to calculate emissions. The following assumptions will be used:

A. 98 % of count with screening value at ppmv

B. 2 % of count with screening value as follows: Ag = 10,000 ppmv

P = 2,000 ppmv

V, PRVs, FL = 500 ppmv

C. The light liquid pumps emission factors were used for heavy liquid pumps, pressure relief devices, agitator seals, per the protocol. The light liquid valve emission factors were used for heavy liquid valves. The connectors emission factors were used for all flanges, hatches, instrumentation and connectors.

Equipment Type	Service	SOCMI Leak Rate (Table 2-9) Leak Rate (kg/hr) = (a) (SV)^b a	b	(kg/hr)	(lb/hr)	Default Zero Values (Table 2-11) (kg/hr)	(lb/hr)
Pump Seals	LL or HL	1.90E-05	0.824	9.97E-03	2.20E-02	7.50E-06	1.65E-05
Agitator Seals	LL or HL	1.90E-05	0.824	3.76E-02	8.27E-02	7.50E-06	1.65E-05
Valves	LL or HL	6.41E-06	0.797	9.08E-04	2.00E-03	4.90E-07	1.08E-06
	Gas	1.87E-06	0.873	4.25E-04	9.35E-04	6.60E-07	1.45E-06
PRV	Gas	1.90E-05	0.824	3.18E-03	7.01E-03	7.50E-06	1.65E-05
Flanges	Gas, LL or HL	3.05E-06	0.885	7.46E-04	1.64E-03	6.10E-07	1.34E-06

2. Open ended lines under the HON/PAI program have all been capped, plugged, etc. Therefore, in accordance with EPA 453/R-95-017, this has a control reduction of 100%. OELs will also be plugged/capped under voluntary LDAR program.

KEY

P - Pumps
Ag - Agitators
V - Valve
PRV - Pressure Relief Valves
OEL - Open-ended Lines or Valves

SV - Screening Value
LL - Light Liquid
HL - Heavy Liquid
FL - Flanges, connectors, manwaus, access hatches

Table 4-3. 2018 Potential Emissions Inventory, Equipment Leaks, HAP Emissions
Koppers Inc., Follansbee Tar Plant, Follansbee, West Virginia

Liquid Components

	Potential Emissions (Tons/yr)										
Pollutant	Crude Tar/ Petro Tar/ Decant Oil	Crude RCO	Crude/ Petro/ Decant Distllate	CTP/ Type A/ Decant/ Petro Pitch	PSB, MPSB	Thermal Oxidizer Condensate	Solvent/ Liquid Fuel	NSR	Petro Distillate	Naphthalene	TOTAL
VOC	0.510	0.101	0.010	0.057	0.032	0.011	0.052	0.030	0.023	0.032	0.859
Benzene	0.002	0.000	0.000	0.000	0.000	0.000	0.000	0.000	0.000	0.000	0.002
Biphenyl	0.004	0.001	0.000	0.000	0.000	0.000	0.000	0.001	0.000	0.000	0.006
m-Cresol	0.002	0.000	0.000	0.000	0.000	0.000	0.000	0.000	0.000	0.000	0.003
o-Cresol	0.001	0.000	0.000	0.000	0.000	0.000	0.000	0.000	0.000	0.000	0.001
p-Cresol	0.003	0.000	0.000	0.000	0.000	0.000	0.000	0.000	0.000	0.000	0.003
Cumene	0.000	0.000	0.000	0.000	0.000	0.000	0.000	0.000	0.000	0.000	0.000
Dibenzofuran	0.011	0.002	0.000	0.000	0.000	0.000	0.000	0.002	0.000	0.000	0.016
Ethylbenzene	0.000	0.000	0.000	0.000	0.000	0.000	0.000	0.000	0.000	0.000	0.000
Naphthalene	0.060	0.056	0.001	0.000	0.000	0.001	0.000	0.001	0.002	0.032	0.154
Phenol	0.004	0.000	0.000	0.000	0.000	0.000	0.000	0.000	0.000	0.000	0.004
Quinoline	0.003	0.001	0.000	0.000	0.000	0.000	0.000	0.001	0.000	0.000	0.005
Styrene	0.001	0.000	0.000	0.000	0.000	0.000	0.000	0.000	0.000	0.000	0.001
Toluene	0.001	0.000	0.000	0.000	0.000	0.000	0.000	0.000	0.000	0.000	0.002
m-Xylene	0.001	0.000	0.000	0.000	0.000	0.000	0.000	0.000	0.000	0.000	0.001
o-Xylene	0.001	0.000	0.000	0.000	0.000	0.000	0.000	0.000	0.000	0.000	0.001
p-Xylene	0.001	0.000	0.000	0.000	0.000	0.000	0.000	0.000	0.000	0.000	0.001
Acenaphthene	0.015	0.003	0.000	0.000	0.000	0.000	0.000	0.003	0.001	0.000	0.023
Acenaphthylene	0.012	0.001	0.000	0.000	0.000	0.000	0.000	0.001	0.000	0.000	0.014
Anthracene	0.019	0.001	0.000	0.000	0.000	0.000	0.000	0.001	0.000	0.000	0.022
Benzo(a)anthracene	0.008	0.000	0.000	0.000	0.000	0.000	0.000	0.000	0.000	0.000	0.009
Benzo(b)fluoranthene	0.013	0.000	0.000	0.001	0.000	0.000	0.000	0.000	0.000	0.000	0.015
Benzo(k)fluoranthene	0.003	0.000	0.000	0.000	0.000	0.000	0.000	0.000	0.000	0.000	0.003
Benzo(g,h,i)perylene	0.003	0.000	0.000	0.001	0.000	0.000	0.000	0.000	0.000	0.000	0.004
Benzo(a)pyrene	0.010	0.000	0.000	0.001	0.000	0.000	0.000	0.000	0.000	0.000	0.011
Chrysene	0.008	0.000	0.000	0.000	0.000	0.000	0.000	0.000	0.000	0.000	0.009
Dibenzo(a,h)anthracene	0.001	0.000	0.000	0.001	0.000	0.000	0.000	0.000	0.000	0.000	0.002
Fluoranthene	0.020	0.001	0.001	0.000	0.001	0.000	0.000	0.001	0.000	0.000	0.024
Fluorene	0.014	0.002	0.000	0.000	0.000	0.000	0.000	0.003	0.000	0.000	0.020
Indeno(1,2,3-cd)pyrene	0.004	0.000	0.000	0.000	0.000	0.000	0.000	0.000	0.000	0.000	0.004
Phenanthrene	0.038	0.003	0.001	0.000	0.001	0.001	0.000	0.004	0.001	0.000	0.049
Pyrene	0.016	0.001	0.000	0.000	0.001	0.000	0.000	0.000	0.001	0.000	0.019
TOTAL HAPS	0.277	0.074	0.005	0.006	0.007	0.003	0.001	0.017	0.007	0.032	0.430
TOTAL POM	0.261	0.072	0.005	0.006	0.007	0.003	0.000	0.017	0.007	0.032	0.410

Gas/Vapor Components

	Potential Emissions (Tons/yr)										
Pollutant	Crude Tar/ Petro Tar/ Decant Oil	Crude RCO	Crude/ Petro/ Decant Distllate	CTP/ Type A/ Decant/ Petro Pitch	PSB, MPSB	Thermal Oxidizer Condensate	Solvent/ Liquid Fuel	NSR	Petro Distillate	Naphthalene	TOTAL
VOC	0.134	0.028	0.003	0.065	0.038	0.003	0.016	0.011	0.028	0.002	0.329
Benzene	0.047	0.005	0.000	0.000	0.000	0.001	0.000	0.000	0.004	0.000	0.058
Biphenyl	0.002	0.000	0.000	0.000	0.001	0.000	0.000	0.000	0.000	0.000	0.004
m-Cresol	0.001	0.000	0.000	0.000	0.000	0.000	0.000	0.000	0.000	0.000	0.001
o-Cresol	0.001	0.000	0.000	0.000	0.000	0.000	0.000	0.000	0.000	0.000	0.001
p-Cresol	0.001	0.000	0.000	0.000	0.000	0.000	0.000	0.000	0.000	0.000	0.001
Cumene	0.000	0.000	0.000	0.000	0.000	0.000	0.000	0.000	0.000	0.000	0.000
Dibenzofuran	0.002	0.000	0.000	0.017	0.002	0.000	0.000	0.000	0.000	0.000	0.021
Ethylbenzene	0.001	0.000	0.000	0.000	0.000	0.000	0.000	0.000	0.000	0.000	0.001
Naphthalene	0.072	0.011	0.002	0.000	0.023	0.001	0.000	0.003	0.009	0.002	0.123
Phenol	0.004	0.000	0.000	0.000	0.000	0.000	0.000	0.000	0.000	0.000	0.004
Quinoline	0.001	0.000	0.000	0.000	0.000	0.000	0.000	0.001	0.000	0.000	0.002
Styrene	0.002	0.001	0.000	0.000	0.000	0.000	0.000	0.000	0.000	0.000	0.004
Toluene	0.015	0.002	0.000	0.000	0.000	0.000	0.000	0.000	0.003	0.000	0.021
m-Xylene	0.005	0.001	0.000	0.000	0.000	0.000	0.000	0.000	0.001	0.000	0.007
o-Xylene	0.002	0.000	0.000	0.000	0.000	0.000	0.000	0.000	0.000	0.000	0.003
p-Xylene	0.005	0.001	0.000	0.000	0.000	0.000	0.000	0.000	0.001	0.000	0.007
Acenaphthene	0.013	0.000	0.000	0.036	0.003	0.000	0.000	0.001	0.000	0.000	0.054
Acenaphthylene	0.004	0.000	0.000	0.000	0.001	0.000	0.000	0.000	0.000	0.000	0.005
Anthracene	0.000	0.000	0.000	0.006	0.001	0.000	0.000	0.000	0.000	0.000	0.007
Benzo(a)anthracene	0.000	0.000	0.000	0.001	0.000	0.000	0.000	0.000	0.000	0.000	0.001
Benzo(b)fluoranthene	0.000	0.000	0.000	0.001	0.000	0.000	0.000	0.000	0.000	0.000	0.001
Benzo(k)fluoranthene	0.000	0.000	0.000	0.000	0.000	0.000	0.000	0.000	0.000	0.000	0.000
Benzo(g,h,i)perylene	0.000	0.000	0.000	0.000	0.000	0.000	0.000	0.000	0.000	0.000	0.000
Benzo(a)pyrene	0.000	0.000	0.000	0.000	0.000	0.000	0.000	0.000	0.000	0.000	0.000
Chrysene	0.000	0.000	0.000	0.000	0.000	0.000	0.000	0.000	0.000	0.000	0.000
Dibenzo(a,h)anthracene	0.000	0.000	0.000	0.000	0.000	0.000	0.000	0.000	0.000	0.000	0.000
Fluoranthene	0.000	0.000	0.000	0.016	0.001	0.000	0.000	0.000	0.000	0.000	0.018
Fluorene	0.003	0.000	0.000	0.013	0.002	0.000	0.000	0.000	0.000	0.000	0.019
Indeno(1,2,3-cd)pyrene	0.000	0.000	0.000	0.000	0.000	0.000	0.000	0.000	0.000	0.000	0.000
Phenanthrene	0.001	0.000	0.000	0.018	0.002	0.000	0.000	0.000	0.000	0.000	0.022
Pyrene	0.000	0.000	0.000	0.006	0.000	0.000	0.000	0.000	0.000	0.000	0.006
TOTAL HAPS	0.184	0.021	0.003	0.117	0.035	0.003	0.001	0.006	0.021	0.002	0.393
TOTAL POM	0.099	0.011	0.002	0.117	0.035	0.001	0.000	0.006	0.011	0.002	0.284

Table 4-4. 2018 Potential Emissions Inventory, Equipment Leaks, HAP's in Liquid Composition
Koppers Inc., Follansbee Tar Plant, Follansbee, West Virginia

Liquid Composition, % by Weight

Pollutant	Crude Tar/ Petro Tar/ Decant Oil	Crude RCO	Crude/ Petro/ Decant Distllate	CTP/ Type A/ Decant/ Petro Pitch	PSB, MPSB	Thermal Oxidizer Condensate	Solvent/ Liquid Fuel	NSR	Petro Distillate	Naphthalene
Benzene	0.33	0.21	0.04	0.00	0.00	0.02	0.00	0.00	0.04	0.00
Biphenyl	0.70	1.08	1.25	0.00	0.15	0.57	0.00	2.77	1.25	0.00
m-Cresol	0.45	0.22	0.24	0.00	0.00	0.09	0.05	0.01	0.24	0.00
o-Cresol	0.25	0.00	0.20	0.00	0.00	0.08	0.17	0.00	0.20	0.00
p-Cresol	0.50	0.22	0.24	0.00	0.00	0.09	0.06	0.01	0.24	0.00
Cumene	0.00	0.00	0.00	0.00	0.00	0.00	0.00	0.00	0.00	0.00
Dibenzofuran	2.20	1.83	1.77	0.12	0.58	1.09	0.00	7.18	1.29	0.00
Ethylbenzene	0.02	0.08	0.03	0.00	0.00	0.01	0.21	0.00	0.00	0.00
Naphthalene	11.70	55.60	8.40	0.00	1.39	5.62	0.86	4.19	8.03	100.00
Phenol	0.76	0.16	0.07	0.00	0.00	0.03	0.44	0.00	0.07	0.00
Quinoline	0.60	0.92	0.53	0.00	0.02	0.27	0.00	1.90	0.53	0.00
Styrene	0.11	0.34	0.02	0.00	0.00	0.01	0.28	0.00	0.02	0.00
Toluene	0.25	0.22	0.07	0.00	0.00	0.04	0.00	0.01	0.07	0.00
m-Xylene	0.20	0.21	0.04	0.00	0.00	0.02	0.20	0.00	0.04	0.00
o-Xylene	0.10	0.14	0.03	0.00	0.00	0.01	0.20	0.01	0.03	0.00
p-Xylene	0.20	0.21	0.04	0.00	0.00	0.02	0.16	0.00	0.04	0.00
Acenaphthene	3.00	3.01	4.17	0.32	0.62	2.24	0.00	11.05	2.43	0.00
Acenaphthylene	2.30	1.28	1.82	0.00	0.22	0.67	0.00	1.91	1.82	0.00
Anthracene	3.70	0.76	3.02	0.19	1.42	1.57	0.00	2.84	1.60	0.00
Benzo(a)anthracene	1.60	0.00	1.80	0.67	1.08	1.38	0.00	0.00	0.84	0.00
Benzo(b)fluoranthene	2.60	0.00	0.78	1.48	0.79	0.50	0.00	0.00	0.02	0.00
Benzo(k)fluoranthene	0.49	0.00	1.21	0.52	0.30	0.67	0.00	0.00	0.02	0.00
Benzo(g,h,i)perylene	0.61	0.00	0.52	1.13	0.74	0.22	0.00	0.00	0.01	0.00
Benzo(a)pyrene	1.90	0.00	1.29	1.27	0.97	0.80	0.00	0.00	0.05	0.00
Chrysene	1.52	0.00	2.15	0.75	1.19	1.56	0.00	0.00	0.53	0.00
Dibenzo(a,h)anthracene	0.16	0.00	0.15	1.21	0.61	0.09	0.00	0.00	0.02	0.00
Fluoranthene	3.90	0.78	6.65	0.74	3.07	2.73	0.00	2.41	1.29	0.00
Fluorene	2.80	2.12	3.07	0.19	0.93	1.64	0.00	8.67	1.59	0.00
Indeno(1,2,3-cd)pyrene	0.80	0.00	0.49	0.21	0.69	0.19	0.00	0.00	0.00	0.00
Phenanthrene	7.40	3.20	12.14	0.44	3.64	5.95	0.00	12.09	5.23	0.00
Pyrene	3.10	0.52	4.78	0.67	2.39	2.69	0.00	1.58	2.29	0.00
TOTAL HAPS	-	-	-	-	-	-	-	-	-	-

Gas Composition, % by weight

Pollutant	Crude Tar/ Petro Tar/ Decant Oil	Crude RCO	Crude/ Petro/ Decant Distllate	CTP/ Type A/ Decant/ Petro Pitch	PSB, MPSB	Thermal Oxidizer Condensate	Solvent/ Liquid Fuel	NSR	Petro Distillate	Naphthalene
Assumed Gas Temp. (F)	250	180	200	500	450	130	95	160	200	230
Benzene	35.15	17.07	15.90	0.00	0.00	20.20	0.00	0.00	15.90	0.00
Biphenyl	1.49	0.11	0.84	0.00	2.57	0.33	0.00	2.54	0.84	0.00
m-Cresol	0.79	0.14	0.92	0.00	0.00	0.34	0.01	0.06	0.92	0.00
o-Cresol	0.69	0.00	1.25	0.00	0.00	0.52	0.03	0.00	1.25	0.00
p-Cresol	0.78	0.11	0.77	0.00	0.00	0.26	0.00	0.05	0.77	0.00
Cumene	0.00	0.00	0.00	0.00	0.00	0.00	0.00	0.00	0.00	0.00
Dibenzofuran	1.52	0.03	0.49	26.24	4.68	0.10	0.00	1.15	0.17	0.00
Ethylbenzene	0.44	1.06	6.92	0.00	0.00	1.34	1.12	0.00	0.00	0.00
Naphthalene	53.73	38.82	72.04	0.00	60.61	29.43	0.14	29.21	32.86	100.00
Phenol	2.61	0.20	0.53	0.00	0.00	0.21	0.10	0.00	0.53	0.00
Quinoline	0.86	0.28	0.98	0.00	0.67	0.57	0.00	5.64	0.98	0.00
Styrene	1.74	3.07	0.97	0.00	0.00	0.88	0.94	0.00	0.97	0.00
Toluene	11.14	6.75	10.84	0.00	0.00	12.22	0.00	3.59	10.84	0.00
m-Xylene	3.84	2.40	4.00	0.00	0.00	2.29	0.90	0.00	2.41	0.00
o-Xylene	1.63	1.33	1.67	0.00	0.00	1.24	0.72	1.05	1.51	0.00
p-Xylene	3.94	2.48	4.13	0.00	0.00	2.39	0.75	0.00	2.49	0.00
Acenaphthene	9.53	0.26	4.77	55.56	7.94	1.26	0.00	9.12	1.33	0.00
Acenaphthylene	2.72	0.11	0.99	0.00	2.03	0.38	0.00	1.58	0.99	0.00
Anthracene	0.31	0.00	0.10	9.20	1.52	0.01	0.00	0.05	0.02	0.00
Benzo(a)anthracene	0.00	0.00	0.00	2.25	0.07	0.00	0.00	0.00	0.00	0.00
Benzo(b)fluoranthene	0.00	0.00	0.00	2.17	0.02	0.00	0.00	0.00	0.00	0.00
Benzo(k)fluoranthene	0.00	0.00	0.00	0.20	0.00	0.00	0.00	0.00	0.00	0.00
Benzo(g,h,i)perylene	0.00	0.00	0.00	0.12	0.00	0.00	0.00	0.00	0.00	0.00
Benzo(a)pyrene	0.00	0.00	0.00	0.46	0.01	0.00	0.00	0.00	0.00	0.00
Chrysene	0.00	0.00	0.00	0.63	0.02	0.00	0.00	0.00	0.00	0.00
Dibenzo(a,h)anthracene	0.00	0.00	0.00	0.07	0.00	0.00	0.00	0.00	0.00	0.00
Fluoranthene	0.28	0.00	0.28	24.99	2.33	0.04	0.00	0.06	0.03	0.00
Fluorene	2.42	0.08	1.62	20.62	5.16	0.38	0.00	3.09	0.40	0.00
Indeno(1,2,3-cd)pyrene	0.00	0.00	0.00	0.01	0.00	0.00	0.00	0.00	0.00	0.00
Phenanthrene	0.93	0.01	0.43	28.33	4.73	0.05	0.00	0.22	0.09	0.00
Pyrene	0.03	0.00	0.01	8.97	0.42	0.00	0.00	0.00	0.00	0.00
TOTAL HAPS	-	-	-	-	-	-	-	-	-	-

Table 5-1A. Assumptions for the 2018 Potential Emissions Inventory, Storage Tanks, Tar Distillation
Koppers Inc., Follansbee Tar Plant, Follansbee, West Virginia

Emission Source	Dimensions Diameter (ft)	Height (ft)	Volume (gal)	Control Device	Efficiency	Typical Service	Maximum Storage Temp. (F)	Estimated Annual Throughput (gal/yr)	Blending	Maximum Temp. of Material to be Blended (F)	Estimated Additional Throughput for Blending (gal/yr)
100% Crude Tar Refining											
Tank 48	50	35	514,077	Flare or TO	98	Crude Tar	220	19,500,000			
Tank 49	50	35	514,077	Flare or TO	98	Crude Tar	220	19,500,000			
Tank 50	72	35	1,065,991	Flare or TO	98	Crude Tar	220	19,500,000			
Tank 6	50.0	35.3	518,484	Flare or TO	98	Crude Tar	220	19,500,000			
						Assumptions:					
						a. Maximum Crude Tar Throughput:		60,000,000 gal/yr			
						Add 30% for double transfers:		78,000,000 gal/yr			
						b. Equal distribution between tanks					
Tank 15	16	40	60,162	None		Cap Water (from Crude Tar Only)	130	9,000,000			
						Assumptions					
						a. Maximum Crude Tar Throughput:		60,000,000 gal/yr			
						% Water in Crude Tar:		15 %			
						Maximum Water Throughput:		9,000,000 gal/yr			
Tank 89	24.5	30	105,797	Flare or TO	98	Crude RCO	210	19,200,000			
Tank 56	72	30	913,707	Flare or TO	98	Crude RCO	210	0			
						Assumptions:					
						a. Maximum Crude Tar Throughput:		60,000,000 gal/yr			
						b. Percent of tar for pitch production:		70 %			
						c. Tar Throughput to Stills for Pitch Production		42,000,000 gal/yr			
						% Yield Light from Feed:		20 %			
						Maximum RCO Throughput from Pitch Production		8,400,000 gal/yr			
						d. Percent of tar for PSB production:		30 %			
						e. Tar Throughput to Stills for PSB Production:		18,000,000 gal/yr			
						% Yield Light from Feed:		18 %			
						Maximum RCO Throughput from PSB Production		10,800,000 gal/yr			
						f. Maximum RCO Throughput		19,200,000			
						g. Tank 89 to see all RCO throughput. Tank 56 just has residual material.					
Tank 223	16	36	54,146	Flare or TO	98	Crude Distillate	200	13,500,000			
Tank 10	22	35	99,525	Flare or TO	98	Crude Distillate	200	13,500,000			
						Assumptions					
						a. Maximum Crude Tar Throughput:		60,000,000 gal/yr			
						b. Percent of tar for pitch production:		70 %			
						c. Tar Throughput to Stills for Pitch Production		42,000,000 gal/yr			
						% Yield Middle Oil/Heavy from Feed:		25 %			
						Maximum Middle Oil/Heavy Oil Throughput:		15,000,000 gal/yr			
						d. Percent of tar for PSB production:		30 %			
						e. Tar Throughput to Stills for PSB Production:		18,000,000 gal/yr			
						% Yield Middle Oil/Heavy from Feed:		20 %			
						Maximum Middle Oil/Heavy Oil Throughput from PSB Prod		12,000,000 gal/yr			
						f. Maximum Middle Oil/Heavy Oil Throughput		27,000,000			
						b. Equal distribution between tanks					
Coal Tar Pitch/Type A/B Pitch Blending						*Coal Tar Pitch - Case 1*					
Tank 801	26	16	63,546	Scrubber E	80	Coal Tar Pitch	500	3,850,000			
Tank 802	26	16	63,546	Scrubber E	80	Coal Tar Pitch	500	3,850,000			
Tank 804	23	18	55,943	Scrubber E	80	Coal Tar Pitch	500	3,850,000			
Tank 805	18	18	34,264	Scrubber E	80	Coal Tar Pitch	500	3,850,000			
Tank 806	23	21	65,267	Scrubber E	80	Coal Tar Pitch	500	3,850,000			
Tank 808	23	21	65,267	Scrubber E	80	Coal Tar Pitch	500	3,850,000			
						Assumptions:					
						a. Maximum Crude Tar Throughput:		60,000,000 gal/yr			
						b. Percent of tar for pitch production:		70 %			
						c. Tar Throughput to Stills for Pitch Production		42,000,000 gal/yr			
						% Yield Pitch Yield from Feed:		55 %			
						Maximum Pitch Throughput		23,100,000 gal/yr			
						d. Equal distribution between tanks					
						Addition of Petroleum Pitch to Make Type A/B Pitch - Case 2					
Tank 801	26	16	63,546	Scrubber E	80	Coal Tar Pitch	500	3,850,000	Petro Pitch	500	2,566,667
Tank 802	26	16	63,546	Scrubber E	80	Coal Tar Pitch	500	3,850,000	Petro Pitch	500	2,566,667
Tank 804	23	18	55,943	Scrubber E	80	Coal Tar Pitch	500	3,850,000	Petro Pitch	500	2,566,667
Tank 805	18	18	34,264	Scrubber E	80	Coal Tar Pitch	500	3,850,000	Petro Pitch	500	2,566,667
Tank 806	23	21	65,267	Scrubber E	80	Coal Tar Pitch	500	3,850,000	Petro Pitch	500	2,566,667
Tank 808	23	21	65,267	Scrubber E	80	Coal Tar Pitch	500	3,850,000	Petro Pitch	500	2,566,667
						Assumptions:					
						a. Coal tar pitch throughput the same as in Case 1.					
						b. Petroleum Pitch Additive for Type A/B Pitch:					
						Type A/B Pitch is Coal Tar		60 %			
						Petroleum Pitch		40 %			
						Maximum Type A/B Pitch =		38,500,000 gal/yr			
						Maximum petroleum pitch for Type A/B production:		15,400,000 gal/yr			
						c. Equal distribution between tanks					
PSB/MPSB Blending						*Pavement Sealer Base - Case 1*					
Tank 13	24	20.25	68,528	Flare or TO	98	Pavement Sealer Base	450	2,790,000			
Tank 14	24	20.25	68,528	Flare or TO	98	Pavement Sealer Base	450	2,790,000			
Tank 406	12	27	22,843	Flare or TO	98	Pavement Sealer Base	450	2,790,000			
Tank 407	12	27	22,843	Flare or TO	98	Pavement Sealer Base	450	2,790,000			
						Assumptions					
						a. Maximum Crude Tar Throughput:		60,000,000 gal/yr			
						b. Percent of tar for PSB production:		30 %			
						c. Tar Throughput to Stills for PSB Production:		18,000,000 gal/yr			
						% Yield PSB Yield from Feed:		62 %			
						Maximum PSB Throughput		11,160,000 gal/yr			
						d. Equal distribution between tanks					
						Addition of Petro Tar to Make Modified PSB - Case 2					
Tank 13	24	20.25	68,528	Flare or TO	98	Pavement Sealer Base	450	2,790,000	Petro Tar	250	1,195,714
Tank 14	24	20.25	68,528	Flare or TO	98	Pavement Sealer Base	450	2,790,000	Petro Tar	250	1,195,714
Tank 406	12	27	22,843	Flare or TO	98	Pavement Sealer Base	450	2,790,000	Petro Tar	250	1,195,714
Tank 407	12	27	22,843	Flare or TO	98	Pavement Sealer Base	450	2,790,000	Petro Tar	250	1,195,714
						Assumptions					
						a. PSB throughput - Same throughput as Case 1					
						b. Petro Tar Additive for MPSB:					
						MPSB is PSB:		70 %			
						Petro Tar		30 %			
						Maximum MPSB =		15,942,857 gal/yr			
						Maximum petro tar throughput for MPSB production:		4,782,857 gal/yr			
						Equal distribution between tanks					
100% Petro Tar Refining											

Table 5-1A. Assumptions for the 2018 Potential Emissions Inventory, Storage Tanks, Tar Distillation
Koppers Inc., Follansbee Tar Plant, Follansbee, West Virginia

Emission Source	Dimensions Diameter (ft)	Height (ft)	Volume (gal)	Control Device	Efficiency	Typical Service	Maximum Storage Temp. (F)	Estimated Annual Throughput (gal/yr)	Blending	Maximum Temp. of Material to be Blended (F)	Estimated Additional Throughput for Blending (gal/yr)
Tank 50	72	35	1,065,991	Flare or TO	98	Petro Tar	250	15,000,000			
Tank 6	30.0	35.3	518,484	Flare or TO	98	Petro Tar	250	15,000,000			
						Assumptions:					
						a. Maximum Petro Tar Throughput		30,000,000 gal/yr			
						b. Equal distribution between tanks					
Tank 7	50	35	514,077	Flare or TO	98	Petro Distillate	200	1,838,571			
Tank 9	50	35	514,077	Flare or TO	98	Petro Distillate	200	1,838,571			
Tank 221	16	36	54,146	Flare or TO	98	Petro Distillate	200	1,838,571			
Tank 222	16	36	54,146	Flare or TO	98	Petro Distillate	200	1,838,571			
Tank 223	16	36	54,146	Flare or TO	98	Petro Distillate	200	1,838,571			
Tank 224	16	36	54,146	Flare or TO	98	Petro Distillate	200	1,838,571			
Tank 10	22	35	99,525	Flare or TO	98	Petro Distillate	200	1,838,571			
						Assumptions					
						a. Maximum Petro Tar Throughput:		30,000,000 gal/yr			
						b. Percent of tar for pitch production:		70 %			
						c. Tar Throughput to Stills for Pitch Production		21,000,000 gal/yr			
						% Yield Middle Oil/Heavy from Feed:		45 %			
						Maximum Middle Oil/Heavy Oil Throughput:		9,450,000 gal/yr			
						d. Percent of tar for PSB production:		30 %			
						e. Tar Throughput to Stills for PSB Production:		9,000,000 gal/yr			
						% Yield Middle Oil/Heavy from Feed:		38 %			
						Maximum Middle Oil/Heavy Oil Throughput from PSB Produ		3,420,000 gal/yr			
						f. Maximum Middle Oil/Heavy Oil Throughput		12,870,000			
						b. Equal distribution between tanks					
Tank 801	26	16	63,546	Scrubber E	80	Petroleum Pitch	500	1,925,000			
Tank 802	26	16	63,546	Scrubber E	80	Petroleum Pitch	500	1,925,000			
Tank 804	23	18	55,943	Scrubber E	80	Petroleum Pitch	500	1,925,000			
Tank 805	18	18	34,264	Scrubber E	80	Petroleum Pitch	500	1,925,000			
Tank 806	23	21	65,267	Scrubber E	80	Petroleum Pitch	500	1,925,000			
Tank 808	23	21	65,267	Scrubber E	80	Petroleum Pitch	500	1,925,000			
						Assumptions:					
						a. Maximum Petro Tar Throughput:		30,000,000 gal/yr			
						b. Percent of tar for pitch production:		70 %			
						c. Tar Throughput to Stills for Pitch Production		21,000,000 gal/yr			
						% Yield Pitch Yield from Feed:		55 %			
						Maximum Pitch Throughput		11,550,000 gal/yr			
						d. Equal distribution between tanks					
Tank 406	12	27	22,843	Flare or TO	98	Petro PSB	250	2,790,000			
Tank 407	12	27	22,843	Flare or TO	98	Petro PSB	250	2,790,000			
						Assumptions					
						a. Maximum Petro Tar Throughput:		30,000,000 gal/yr			
						b. Percent of tar for PSB production:		30 %			
						c. Tar Throughput to Stills for PSB Production:		9,000,000 gal/yr			
						% Yield PSB Yield from Feed:		62 %			
						Maximum PSB Throughput		5,580,000 gal/yr			
						d. Equal distribution between tanks					
100% Decanted Oil Refining											
Tank 50	72	35	1,065,991	Flare or TO	98	Decanted Oil	250	15,000,000			
Tank 6	30.0	35.3	518,484	Flare or TO	98	Decanted Oil	250	15,000,000			
						Assumptions:					
						a. Maximum Decant Oil Throughput		30,000,000 gal/yr			
						b. Equal distribution between tanks					
Tank 223	16	36	54,146	Flare or TO	98	Decanted Oil Distillate	200	6,150,000			
Tank 10	22	35	99,525	Flare or TO	98	Decanted Oil Distillate	200	6,150,000			
						Assumptions					
						a. Maximum Decant Oil Throughput:		30,000,000 gal/yr			
						b. Percent of tar for pitch production:		80 %			
						c. Tar Throughput to Stills for Pitch Production		24,000,000 gal/yr			
						% Yield Middle Oil/Heavy from Feed:		45 %			
						Maximum Middle Oil/Heavy Oil Throughput:		10,800,000 gal/yr			
						d. Percent of tar for PSB production:		20 %			
						e. Tar Throughput to Stills for PSB Production:		6,000,000 gal/yr			
						% Yield Middle Oil/Heavy from Feed:		25 %			
						Maximum Middle Oil/Heavy Oil Throughput from PSB Produ		1,500,000 gal/yr			
						f. Maximum Middle Oil/Heavy Oil Throughput		12,300,000			
						b. Equal distribution between tanks					
Tank 801	26	16	63,546	Scrubber E	80	Petro Pitch	500	2,200,000			
Tank 802	26	16	63,546	Scrubber E	80	Petro Pitch	500	2,200,000			
Tank 804	23	18	55,943	Scrubber E	80	Petro Pitch	500	2,200,000			
Tank 805	18	18	34,264	Scrubber E	80	Petro Pitch	500	2,200,000			
Tank 806	23	21	65,267	Scrubber E	80	Petro Pitch	500	2,200,000			
Tank 808	23	21	65,267	Scrubber E	80	Petro Pitch	500	2,200,000			
						Assumptions:					
						a. Maximum Decant Oil Throughput:		30,000,000 gal/yr			
						b. Percent of oil for pitch production:		80 %			
						c. Tar Throughput to Stills for Pitch Production		24,000,000 gal/yr			
						% Yield Pitch Yield from Feed:		55 %			
						Maximum Pitch Throughput		13,200,000 gal/yr			
						d. Equal distribution between tanks					
Tank 406	12	27	22,843	Flare or TO	98	Petro PSB	250	2,250,000			
Tank 407	12	27	22,843	Flare or TO	98	Petro PSB	250	2,250,000			
						Assumptions					
						a. Maximum Decanted Oil Throughput:		30,000,000 gal/yr			
						b. Percent of tar for PSB production:		20 %			
						c. Tar Throughput to Stills for PSB Production:		6,000,000 gal/yr			
						% Yield PSB Yield from Feed:		75 %			
						Maximum PSB Throughput		4,500,000 gal/yr			
						d. Equal distribution between tanks					

Turnover factor set to 1 for all calculations.
Tax, Tan, and I were taken from Tank4.09 Database.
Liquid height assumed to be 50% of tank height.

Table 5-1B. Assumptions for the 2018 Potential Emissions Inventory, Miscellaneous Storage Tanks
Koppers Inc., Follansbee Tar Plant, Follansbee, West Virginia

Emission Source	Dimensions Diameter (ft)	Height (ft)	Volume (gal)	Control Device	% Control	Typical Service	Throughput (gal/yr)	Assumption Note	Maximum Storage Temp. (F)
Tanks with Negligible Emissions or Other Tanks									
Tank 4	50.0	35.0	514,077	None	0%	NA			
Tank 53	72.0	34.9	1,062,945	None	0%	River Water			
Tank 57	50.0	30.0	440,638	None	0%	NA			
Tank 87	24.5	29.9	105,444	None	0%	Soda Ash			
Tank 126	16.0	40.0	60,162	Flare, Thermal Oxidizer	98%	Miscellaneous			
Tank 153	10.0	20.0	11,750	None	0%	Caustic Soda			
Tank 337	10.0	34.0	19,976	None	0%	Caustic Soda			
Tank 362	14.0	22.5	25,910	None	0%	Thermal Oxidizer Condensate			
Tank 408	12.0	27.0	22,843	None	0%	NA			
Tank 501	45.0	42.0	499,683	None	0%	Wastewater (Non-process)			
Tank 502	45.0	42.0	499,683	None	0%	Wastewater (Non-process)			
Tank 540	35.0	36.0	259,095	Aeration Basin	0%	Wastewater (Process)			
Tank 541	35.0	36.0	259,095	Aeration Basin	0%	Wastewater (Process)			
Tank 560	11.0	36.0	25,592	None	0%	DAF Sludge			
Tank 561	11.0	36.0	25,592	None	0%	DAF Sludge			
Tank 580	25.0	30.0	110,159	None	0%	Wastewater (Combined)			
Tank R1	10.0	22.0	12,925	None	0%	Miscellaneous			
Tank R2/4	6.4	5.0	1,203	None	0%	Miscellaneous			
Tanks with Calculated Emissions (not in Tar Distillation)									
Tank 11	22.0	35.0	99,525	Flare, Thermal Oxidizer	98%	Liquid Fuel	5,256,000	Maximum Solvent Production	70
Tank 24	20.0	25.0	58,752	None	0%	Unwashed Solvent	1,752,000	One-third Max Solvent	70
Tank 25	20.0	25.0	58,752	None	0%	Unwashed Solvent	1,752,000	One-third Max Solvent	70
Tank 83	24.5	30.0	105,797	Flare, Thermal Oxidizer	98%	Naphthalene	0	Residual Material - Standing Losses Only	240
Tank 88	24.5	30.0	105,797	None	0%	NSR	0	Residual Material - Standing Losses Only	195
Tank 363	14.0	22.5	25,910	Flare, Thermal Oxidizer	98%	Thermal Oxidizer Condensate	140,000	Maximum per M. Alan	180

Table 5-2A. 2018 Potential Emissions Inventory, Storage Tanks, Summary of Emissions
Koppers Inc., Follansbee Tar Plant, Follansbee, West Virginia

OVERALL SUMMARY

Pollutant	100% Crude Tar (lbs/yr)	100% Petro Tar (lbs/yr)	100% Decant Oil (lbs/yr)	MAX (lbs/yr)	Misc Tanks (lbs/yr)	Total Emissions (tons/yr)
VOC	6,735.86	1,432.26	1,668.86	6,735.86	363.46	3.55
Benzene	989.52	16.85	0.00	989.52	0.00	0.49
Biphenyl	10.34	0.88	0.06	10.34	1.33	0.01
m-Cresol	15.07	0.97	0.05	15.07	0.04	0.01
o-Cresol	12.59	1.32	0.12	12.59	0.08	0.01
p-Cresol	14.10	0.81	0.04	14.10	0.03	0.01
Cumene	0.00	0.00	0.00	0.00	0.00	0.00
Dibenzofuran	397.33	0.18	0.12	397.33	0.68	0.20
Ethylbenzene	15.75	0.00	1.34	15.75	3.81	0.01
Naphthalene	1,116.57	34.65	22.57	1,116.57	26.92	0.57
Phenol	48.28	0.56	0.05	48.28	0.24	0.02
Quinoline	16.34	1.03	0.02	16.34	2.57	0.01
Styrene	55.63	1.02	0.00	55.63	3.01	0.03
Toluene	306.54	11.48	0.00	306.54	1.20	0.15
m-Xylene	100.49	2.55	0.78	100.49	2.91	0.05
o-Xylene	43.98	1.60	0.32	43.98	2.69	0.02
p-Xylene	103.47	2.63	0.80	103.47	2.46	0.05
Acenaphthene	1,363.40	738.91	821.74	1,363.40	4.39	0.68
Acenaphthylene	12.98	1.05	0.31	12.98	0.76	0.01
Anthracene	177.38	61.52	68.50	177.38	0.03	0.09
Benzo(a)anthracene	33.90	3.56	3.97	33.90	0.00	0.02
Benzo(b)fluoranthene	30.31	0.33	0.37	30.31	0.00	0.02
Benzo(k)fluoranthene	2.01	0.04	0.05	2.01	0.00	0.00
Benzo(g,h,i)perylene	1.60	0.00	0.00	1.60	0.00	0.00
Benzo(a)pyrene	6.52	0.37	0.41	6.52	0.00	0.00
Chrysene	9.82	1.25	1.40	9.82	0.00	0.00
Dibenzo(a,h)anthracene	0.95	0.00	0.00	0.95	0.00	0.00
Fluoranthene	357.33	44.39	49.46	357.33	0.04	0.18
Fluorene	421.38	274.03	304.80	421.38	1.57	0.21
Indeno(1,2,3-cd)pyrene	0.17	0.00	0.00	0.17	0.00	0.00
Phenanthrene	360.28	175.53	195.47	360.28	0.14	0.18
Pyrene	112.79	28.07	31.27	112.79	0.00	0.06
Total HAP	6,136.83	1,405.56	1,504.02	6,136.83	54.92	3.10
Total POM	4,431.41	1,365.77	1,500.51	4,431.41	38.43	2.23

100% CRUDE TAR REFINING

	100% Crude Tar Distillation Potential Emissions (lbs/yr)						
Pollutant	Crude Tar	Cap Water	RCO	Crude Distillate	Pitch	PSB, MPSB, RT	Total
VOC	2,131.33	132.00	579.99	77.07	3,085.56	729.92	6,735.86
Benzene	837.16	69.51	82.85	0.00	0.00	0.00	989.52
Biphenyl	3.89	0.09	0.82	0.32	0.00	5.23	10.34
m-Cresol	13.76	0.37	0.94	0.00	0.00	0.00	15.07
o-Cresol	12.24	0.35	0.00	0.00	0.00	0.00	12.59
p-Cresol	12.99	0.32	0.79	0.00	0.00	0.00	14.10
Cumene	0.00	0.00	0.00	0.00	0.00	0.00	0.00
Dibenzofuran	2.55	0.04	0.28	0.38	360.06	34.01	397.33
Ethylbenzene	9.47	0.58	5.70	0.00	0.00	0.00	15.75
Naphthalene	360.53	13.09	244.99	55.53	0.00	442.44	1,116.57
Phenol	45.63	1.31	1.34	0.00	0.00	0.00	48.28
Quinoline	8.57	0.27	1.85	0.75	0.00	4.90	16.34
Styrene	36.79	1.88	16.97	0.00	0.00	0.00	55.63
Toluene	254.26	18.00	34.29	0.00	0.00	0.00	306.54
m-Xylene	82.57	4.91	13.01	0.00	0.00	0.00	100.49
o-Xylene	34.72	2.00	7.27	0.00	0.00	0.00	43.98
p-Xylene	84.94	5.12	13.40	0.00	0.00	0.00	103.47
Acenaphthene	13.01	0.36	1.82	3.67	1,286.55	57.99	1,363.40
Acenaphthylene	9.97	0.28	0.77	0.00	0.00	1.96	12.98
Anthracene	0.52	0.01	0.01	0.07	167.39	9.36	177.38
Benzo(a)anthracene	0.00	0.00	0.00	0.00	33.41	0.49	33.90
Benzo(b)fluoranthene	0.00	0.00	0.00	0.00	30.19	0.12	30.31
Benzo(k)fluoranthene	0.00	0.00	0.00	0.00	2.00	0.01	2.01
Benzo(g,h,i)perylene	0.00	0.00	0.00	0.00	1.59	0.01	1.60
Benzo(a)pyrene	0.00	0.00	0.00	0.00	6.48	0.04	6.52
Chrysene	0.00	0.00	0.00	0.00	9.74	0.08	9.82
Dibenzo(a,h)anthracene	0.00	0.00	0.00	0.00	0.95	0.00	0.95
Fluoranthene	0.68	0.01	0.02	0.22	340.59	15.82	357.33
Fluorene	5.74	0.14	0.60	1.24	379.43	34.23	421.38
Indeno(1,2,3-cd)pyrene	0.00	0.00	0.00	0.00	0.17	0.01	0.17
Phenanthrene	1.17	0.01	0.06	0.33	327.71	30.99	360.28
Pyrene	0.03	0.00	0.00	0.01	110.32	2.43	112.79
Total HAP	1,831.19	118.63	427.78	62.52	3,056.60	640.12	6,136.83
Total POM	406.66	14.29	251.22	62.52	3,056.60	640.12	4,431.41

Table 5-2A. 2018 Potential Emissions Inventory, Storage Tanks, Summary of Emissions
Koppers Inc., Follansbee Tar Plant, Follansbee, West Virginia

100% PETRO TAR REFINING

	100% Petro Tar Distillation Potential Emissions (lbs/yr)			
Pollutant	Petro Tar	Petro Distillate	Petro Pitch	Total
VOC	25.92	105.58	1,300.76	1,432.26
Benzene	0.00	16.85	0.00	16.85
Biphenyl	0.00	0.88	0.00	0.88
m-Cresol	0.00	0.97	0.00	0.97
o-Cresol	0.00	1.32	0.00	1.32
p-Cresol	0.00	0.81	0.00	0.81
Cumene	0.00	0.00	0.00	0.00
Dibenzofuran	0.00	0.18	0.00	0.18
Ethylbenzene	0.00	0.00	0.00	0.00
Naphthalene	0.00	34.65	0.00	34.65
Phenol	0.00	0.56	0.00	0.56
Quinoline	0.00	1.03	0.00	1.03
Styrene	0.00	1.02	0.00	1.02
Toluene	0.00	11.48	0.00	11.48
m-Xylene	0.00	2.55	0.00	2.55
o-Xylene	0.00	1.60	0.00	1.60
p-Xylene	0.00	2.63	0.00	2.63
Acenaphthene	14.41	1.40	723.10	738.91
Acenaphthylene	0.00	1.05	0.00	1.05
Anthracene	1.20	0.03	60.29	61.52
Benzo(a)anthracene	0.07	0.00	3.49	3.56
Benzo(b)fluoranthene	0.01	0.00	0.33	0.33
Benzo(k)fluoranthene	0.00	0.00	0.04	0.04
Benzo(g,h,i)perylene	0.00	0.00	0.00	0.00
Benzo(a)pyrene	0.01	0.00	0.36	0.37
Chrysene	0.02	0.00	1.23	1.25
Dibenzo(a,h)anthracene	0.00	0.00	0.00	0.00
Fluoranthene	0.87	0.03	43.50	44.39
Fluorene	5.35	0.42	268.26	274.03
Indeno(1,2,3-cd)pyrene	0.00	0.00	0.00	0.00
Phenanthrene	3.43	0.09	172.01	175.53
Pyrene	0.55	0.00	27.52	28.07
Total HAP	25.91	79.54	1,300.11	1,405.56
Total POM	25.91	39.75	1,300.11	1,365.77

100% DECANTED OIL REFINING

	100% Decanted Oil Distillation Potential Emissions (lbs/yr)			
Pollutant	Decant Oil	Decant Oil Distillate	Decant Pitch	Total
VOC	171.96	19.35	1,477.55	1,668.86
Benzene	0.00	0.00	0.00	0.00
Biphenyl	0.00	0.06	0.00	0.06
m-Cresol	0.00	0.05	0.00	0.05
o-Cresol	0.00	0.12	0.00	0.12
p-Cresol	0.00	0.04	0.00	0.04
Cumene	0.00	0.00	0.00	0.00
Dibenzofuran	0.11	0.02	0.00	0.12
Ethylbenzene	0.00	1.34	0.00	1.34
Naphthalene	21.41	1.16	0.00	22.57
Phenol	0.00	0.05	0.00	0.05
Quinoline	0.00	0.02	0.00	0.02
Styrene	0.00	0.00	0.00	0.00
Toluene	0.00	0.00	0.00	0.00
m-Xylene	0.00	0.78	0.00	0.78
o-Xylene	0.00	0.32	0.00	0.32
p-Xylene	0.00	0.80	0.00	0.80
Acenaphthene	0.31	0.05	821.38	821.74
Acenaphthylene	0.24	0.07	0.00	0.31
Anthracene	0.01	0.00	68.49	68.50
Benzo(a)anthracene	0.00	0.00	3.96	3.97
Benzo(b)fluoranthene	0.00	0.00	0.37	0.37
Benzo(k)fluoranthene	0.00	0.00	0.05	0.05
Benzo(g,h,i)perylene	0.00	0.00	0.00	0.00
Benzo(a)pyrene	0.00	0.00	0.41	0.41
Chrysene	0.00	0.00	1.40	1.40
Dibenzo(a,h)anthracene	0.00	0.00	0.00	0.00
Fluoranthene	0.05	0.00	49.41	49.46
Fluorene	0.03	0.04	304.72	304.80
Indeno(1,2,3-cd)pyrene	0.00	0.00	0.00	0.00
Phenanthrene	0.08	0.01	195.38	195.47
Pyrene	0.01	0.00	31.26	31.27
Total HAP	22.26	4.94	1,476.81	1,504.02
Total POM	22.26	1.43	1,476.81	1,500.51

Table 5-2A. 2018 Potential Emissions Inventory, Storage Tanks, Summary of Emissions
Koppers Inc., Follansbee Tar Plant, Follansbee, West Virginia

Miscellaneous Tanks

	Miscellaneous Tanks Potential Emissions (lbs/yr)						
Pollutant	Liquid Fuel Tank 11	Solvent Tank 24	Solvent Tank 25	Naphthalene Tank 83 (Standing Losses Only)	NSR Tank 88 (Standing Losses Only)	T.O. Condensate Tank 363	Total
VOC	8.29	147.69	147.69	13.89	45.83	0.07	363.46
Benzene	0.00	0.00	0.00	0.00	0.00	0.00	0.00
Biphenyl	0.00	0.00	0.00	0.00	1.33	0.00	1.33
m-Cresol	0.00	0.01	0.01	0.00	0.03	0.00	0.04
o-Cresol	0.00	0.04	0.04	0.00	0.00	0.00	0.08
p-Cresol	0.00	0.01	0.01	0.00	0.02	0.00	0.03
Cumene	0.00	0.00	0.00	0.00	0.00	0.00	0.00
Dibenzofuran	0.00	0.00	0.00	0.00	0.67	0.01	0.68
Ethylbenzene	0.10	1.78	1.78	0.00	0.00	0.16	3.81
Naphthalene	0.01	0.18	0.18	13.89	12.65	0.00	26.92
Phenol	0.01	0.12	0.12	0.00	0.00	0.00	0.24
Quinoline	0.00	0.00	0.00	0.00	2.57	0.00	2.57
Styrene	0.08	1.44	1.44	0.00	0.00	0.04	3.01
Toluene	0.00	0.00	0.00	0.00	1.19	0.01	1.20
m-Xylene	0.08	1.41	1.41	0.00	0.00	0.01	2.91
o-Xylene	0.06	1.12	1.12	0.00	0.38	0.01	2.69
p-Xylene	0.07	1.19	1.19	0.00	0.00	0.01	2.46
Acenaphthene	0.00	0.00	0.00	0.00	4.38	0.00	4.39
Acenaphthylene	0.00	0.00	0.00	0.00	0.76	0.00	0.76
Anthracene	0.00	0.00	0.00	0.00	0.03	0.00	0.03
Benzo(a)anthracene	0.00	0.00	0.00	0.00	0.00	0.00	0.00
Benzo(b)fluoranthene	0.00	0.00	0.00	0.00	0.00	0.00	0.00
Benzo(k)fluoranthene	0.00	0.00	0.00	0.00	0.00	0.00	0.00
Benzo(g,h,i)perylene	0.00	0.00	0.00	0.00	0.00	0.00	0.00
Benzo(a)pyrene	0.00	0.00	0.00	0.00	0.00	0.00	0.00
Chrysene	0.00	0.00	0.00	0.00	0.00	0.00	0.00
Dibenzo(a,h)anthracene	0.00	0.00	0.00	0.00	0.00	0.00	0.00
Fluoranthene	0.00	0.00	0.00	0.00	0.03	0.00	0.04
Fluorene	0.00	0.00	0.00	0.00	1.57	0.00	1.57
Indeno(1,2,3-cd)pyrene	0.00	0.00	0.00	0.00	0.00	0.00	0.00
Phenanthrene	0.00	0.00	0.00	0.00	0.14	0.00	0.14
Pyrene	0.00	0.00	0.00	0.00	0.00	0.00	0.00
Total HAP	0.41	7.29	7.29	13.89	25.76	0.27	54.92
Total POM	0.01	0.18	0.18	13.89	24.14	0.02	38.43

Table 5-2B. 2018 Potential Emissions Inventory, Storage Tanks, Summary of Emissions for 100% Crude Tar Distillation
Koppers Inc., Follansbee Tar Plant, Follansbee, West Virginia

	Potential Emissions (lbs/yr)												
	Crude Tar					Cap Water		RCO			Crude Distillate		
Pollutant	Tank 48	Tank 49	Tank 50	Tank 6	Potential Emissions	Tank 15	Potential Emissions	Tank 89	Tank 56	Potential Emissions	Tank 223	Tank 10	Potential Emissions
VOC	521.13	521.13	567.69	521.37	2,131.33	132.00	132.00	491.50	88.48	579.99	38.33	38.75	77.07
Benzene	204.70	204.70	222.98	204.79	837.16	69.51	69.51	70.21	12.64	82.85	0.00	0.00	0.00
Biphenyl	0.95	0.95	1.04	0.95	3.89	0.09	0.09	0.69	0.12	0.82	0.16	0.16	0.32
m-Cresol	3.36	3.36	3.67	3.37	13.76	0.37	0.37	0.79	0.14	0.94	0.00	0.00	0.00
o-Cresol	2.99	2.99	3.26	2.99	12.24	0.35	0.35	0.00	0.00	0.00	0.00	0.00	0.00
p-Cresol	3.18	3.18	3.46	3.18	12.99	0.32	0.32	0.67	0.12	0.79	0.00	0.00	0.00
Cumene	0.00	0.00	0.00	0.00	0.00	0.00	0.00	0.00	0.00	0.00	0.00	0.00	0.00
Dibenzofuran	0.62	0.62	0.68	0.62	2.55	0.04	0.04	0.24	0.04	0.28	0.19	0.19	0.38
Ethylbenzene	2.32	2.32	2.52	2.32	9.47	0.58	0.58	4.83	0.87	5.70	0.00	0.00	0.00
Naphthalene	88.15	88.15	96.03	88.19	360.53	13.09	13.09	207.61	37.38	244.99	27.61	27.92	55.53
Phenol	11.16	11.16	12.15	11.16	45.63	1.31	1.31	1.14	0.20	1.34	0.00	0.00	0.00
Quinoline	2.10	2.10	2.28	2.10	8.57	0.27	0.27	1.57	0.28	1.85	0.37	0.37	0.75
Styrene	8.99	8.99	9.80	9.00	36.79	1.88	1.88	14.38	2.59	16.97	0.00	0.00	0.00
Toluene	62.17	62.17	67.72	62.20	254.26	18.00	18.00	29.06	5.23	34.29	0.00	0.00	0.00
m-Xylene	20.19	20.19	21.99	20.20	82.57	4.91	4.91	11.03	1.98	13.01	0.00	0.00	0.00
o-Xylene	8.49	8.49	9.25	8.49	34.72	2.00	2.00	6.16	1.11	7.27	0.00	0.00	0.00
p-Xylene	20.77	20.77	22.63	20.78	84.94	5.12	5.12	11.36	2.04	13.40	0.00	0.00	0.00
Acenaphthene	3.18	3.18	3.46	3.18	13.01	0.36	0.36	1.54	0.28	1.82	1.83	1.88	3.67
Acenaphthylene	2.44	2.44	2.66	2.44	9.97	0.28	0.28	0.65	0.12	0.77	0.00	0.00	0.00
Anthracene	0.13	0.13	0.14	0.13	0.52	0.01	0.01	0.01	0.00	0.01	0.04	0.04	0.07
Benzo(a)anthracene	0.00	0.00	0.00	0.00	0.00	0.00	0.00	0.00	0.00	0.00	0.00	0.00	0.00
Benzo(b)fluoranthene	0.00	0.00	0.00	0.00	0.00	0.00	0.00	0.00	0.00	0.00	0.00	0.00	0.00
Benzo(k)fluoranthene	0.00	0.00	0.00	0.00	0.00	0.00	0.00	0.00	0.00	0.00	0.00	0.00	0.00
Benzo(g,h,i)perylene	0.00	0.00	0.00	0.00	0.00	0.00	0.00	0.00	0.00	0.00	0.00	0.00	0.00
Benzo(a)pyrene	0.00	0.00	0.00	0.00	0.00	0.00	0.00	0.00	0.00	0.00	0.00	0.00	0.00
Chrysene	0.00	0.00	0.00	0.00	0.00	0.00	0.00	0.00	0.00	0.00	0.00	0.00	0.00
Dibenzo(a,h)anthracene	0.00	0.00	0.00	0.00	0.00	0.00	0.00	0.00	0.00	0.00	0.00	0.00	0.00
Fluoranthene	0.17	0.17	0.18	0.17	0.68	0.01	0.01	0.02	0.00	0.02	0.11	0.11	0.22
Fluorene	1.40	1.40	1.53	1.40	5.74	0.14	0.14	0.51	0.09	0.60	0.62	0.62	1.24
Indeno(1,2,3-cd)pyrene	0.00	0.00	0.00	0.00	0.00	0.00	0.00	0.00	0.00	0.00	0.00	0.00	0.00
Phenanthrene	0.28	0.28	0.31	0.29	1.17	0.01	0.01	0.05	0.01	0.06	0.16	0.17	0.33
Pyrene	0.01	0.01	0.01	0.01	0.03	0.00	0.00	0.00	0.00	0.00	0.00	0.00	0.01
Total HAP	447.75	447.75	487.75	447.95	1,831.19	118.63	118.63	362.52	65.26	427.78	31.09	31.43	62.52
Total POM	99.43	99.43	108.32	99.48	406.66	14.29	14.29	212.89	38.33	251.22	31.09	31.43	62.52

	PSB, MPSB Potential Emissions (lbs/yr)																				
	Tank 13					Tank 14					Tank 406					Tank 407					
	PSB	MPSB				PSB	MPSB				PSB	MPSB				PSB	MPSB				
Pollutant		PSB	Shell	Total	Maximum		PSB	Shell	Total	Maximum		PSB	Shell	Total	Maximum		PSB	Shell	Total	Maximum	Potential Emissions
VOC	185.38	185.38	0.90	186.28	186.28	185.38	185.38	0.90	186.28	186.28	177.78	177.78	0.90	178.68	178.68	177.78	177.78	0.90	178.68	178.68	729.92
Benzene	0.00	0.00	0.00	0.00	0.00	0.00	0.00	0.00	0.00	0.00	0.00	0.00	0.00	0.00	0.00	0.00	0.00	0.00	0.00	0.00	0.00
Biphenyl	1.32	1.32	0.01	1.33	1.33	1.32	1.32	0.01	1.33	1.33	1.27	1.27	0.01	1.28	1.28	1.27	1.27	0.01	1.28	1.28	5.23
m-Cresol	0.00	0.00	0.00	0.00	0.00	0.00	0.00	0.00	0.00	0.00	0.00	0.00	0.00	0.00	0.00	0.00	0.00	0.00	0.00	0.00	0.00
o-Cresol	0.00	0.00	0.00	0.00	0.00	0.00	0.00	0.00	0.00	0.00	0.00	0.00	0.00	0.00	0.00	0.00	0.00	0.00	0.00	0.00	0.00
p-Cresol	0.00	0.00	0.00	0.00	0.00	0.00	0.00	0.00	0.00	0.00	0.00	0.00	0.00	0.00	0.00	0.00	0.00	0.00	0.00	0.00	0.00
Cumene	0.00	0.00	0.00	0.00	0.00	0.00	0.00	0.00	0.00	0.00	0.00	0.00	0.00	0.00	0.00	0.00	0.00	0.00	0.00	0.00	0.00
Dibenzofuran	8.67	8.67	0.01	8.68	8.68	8.67	8.67	0.01	8.68	8.68	8.31	8.31	0.01	8.33	8.33	8.31	8.31	0.01	8.33	8.33	34.01
Ethylbenzene	0.00	0.00	0.00	0.00	0.00	0.00	0.00	0.00	0.00	0.00	0.00	0.00	0.00	0.00	0.00	0.00	0.00	0.00	0.00	0.00	0.00
Naphthalene	112.43	112.43	0.48	112.92	112.92	112.43	112.43	0.48	112.92	112.92	107.82	107.82	0.48	108.31	108.31	107.82	107.82	0.48	108.31	108.31	442.44
Phenol	0.00	0.00	0.00	0.00	0.00	0.00	0.00	0.00	0.00	0.00	0.00	0.00	0.00	0.00	0.00	0.00	0.00	0.00	0.00	0.00	0.00
Quinoline	1.24	1.24	0.01	1.25	1.25	1.24	1.24	0.01	1.25	1.25	1.19	1.19	0.01	1.20	1.20	1.19	1.19	0.01	1.20	1.20	4.90
Styrene	0.00	0.00	0.00	0.00	0.00	0.00	0.00	0.00	0.00	0.00	0.00	0.00	0.00	0.00	0.00	0.00	0.00	0.00	0.00	0.00	0.00
Toluene	0.00	0.00	0.00	0.00	0.00	0.00	0.00	0.00	0.00	0.00	0.00	0.00	0.00	0.00	0.00	0.00	0.00	0.00	0.00	0.00	0.00
m-Xylene	0.00	0.00	0.00	0.00	0.00	0.00	0.00	0.00	0.00	0.00	0.00	0.00	0.00	0.00	0.00	0.00	0.00	0.00	0.00	0.00	0.00
o-Xylene	0.00	0.00	0.00	0.00	0.00	0.00	0.00	0.00	0.00	0.00	0.00	0.00	0.00	0.00	0.00	0.00	0.00	0.00	0.00	0.00	0.00
p-Xylene	0.00	0.00	0.00	0.00	0.00	0.00	0.00	0.00	0.00	0.00	0.00	0.00	0.00	0.00	0.00	0.00	0.00	0.00	0.00	0.00	0.00
Acenaphthene	14.71	14.71	0.09	14.80	14.80	14.71	14.71	0.09	14.80	14.80	14.11	14.11	0.09	14.20	14.20	14.11	14.11	0.09	14.20	14.20	57.99
Acenaphthylene	0.47	0.47	0.02	0.50	0.50	0.47	0.47	0.02	0.50	0.50	0.45	0.45	0.02	0.48	0.48	0.45	0.45	0.02	0.48	0.48	1.96
Anthracene	2.39	2.39	0.00	2.39	2.39	2.39	2.39	0.00	2.39	2.39	2.29	2.29	0.00	2.29	2.29	2.29	2.29	0.00	2.29	2.29	9.36
Benzo(a)anthracene	0.12	0.12	0.00	0.12	0.12	0.12	0.12	0.00	0.12	0.12	0.12	0.12	0.00	0.12	0.12	0.12	0.12	0.00	0.12	0.12	0.49
Benzo(b)fluoranthene	0.03	0.03	0.00	0.03	0.03	0.03	0.03	0.00	0.03	0.03	0.03	0.03	0.00	0.03	0.03	0.03	0.03	0.00	0.03	0.03	0.12
Benzo(k)fluoranthene	0.00	0.00	0.00	0.00	0.00	0.00	0.00	0.00	0.00	0.00	0.00	0.00	0.00	0.00	0.00	0.00	0.00	0.00	0.00	0.00	0.01
Benzo(g,h,i)perylene	0.00	0.00	0.00	0.00	0.00	0.00	0.00	0.00	0.00	0.00	0.00	0.00	0.00	0.00	0.00	0.00	0.00	0.00	0.00	0.00	0.01
Benzo(a)pyrene	0.01	0.01	0.00	0.01	0.01	0.01	0.01	0.00	0.01	0.01	0.01	0.01	0.00	0.01	0.01	0.01	0.01	0.00	0.01	0.01	0.04
Chrysene	0.02	0.02	0.00	0.02	0.02	0.02	0.02	0.00	0.02	0.02	0.02	0.02	0.00	0.02	0.02	0.02	0.02	0.00	0.02	0.02	0.08
Dibenzo(a,h)anthracene	0.00	0.00	0.00	0.00	0.00	0.00	0.00	0.00	0.00	0.00	0.00	0.00	0.00	0.00	0.00	0.00	0.00	0.00	0.00	0.00	0.00
Fluoranthene	4.03	4.03	0.00	4.04	4.04	4.03	4.03	0.00	4.04	4.04	3.87	3.87	0.00	3.87	3.87	3.87	3.87	0.00	3.87	3.87	15.82
Fluorene	8.72	8.72	0.02	8.74	8.74	8.72	8.72	0.02	8.74	8.74	8.36	8.36	0.02	8.38	8.38	8.36	8.36	0.02	8.38	8.38	34.23
Indeno(1,2,3-cd)pyrene	0.00	0.00	0.00	0.00	0.00	0.00	0.00	0.00	0.00	0.00	0.00	0.00	0.00	0.00	0.00	0.00	0.00	0.00	0.00	0.00	0.01
Phenanthrene	7.90	7.90	0.01	7.91	7.91	7.90	7.90	0.01	7.91	7.91	7.58	7.58	0.01	7.59	7.59	7.58	7.58	0.01	7.59	7.59	30.99
Pyrene	0.62	0.62	0.00	0.62	0.62	0.62	0.62	0.00	0.62	0.62	0.59	0.59	0.00	0.59	0.59	0.59	0.59	0.00	0.59	0.59	2.43
Total HAP	162.70	162.70	0.66	163.36	163.36	162.70	162.70	0.66	163.36	163.36	156.03	156.03	0.66	156.69	156.69	156.03	156.03	0.66	156.69	156.69	640.12
Total POM	162.70	162.70	0.66	163.36	163.36	162.70	162.70	0.66	163.36	163.36	156.03	156.03	0.66	156.69	156.69	156.03	156.03	0.66	156.69	156.69	640.12

Table 5-2B. 2018 Potential Emissions Inventory, Storage Tanks, Summary of Emissions for 100% Crude Tar Distillation
Koppers Inc., Follansbee Tar Plant, Follansbee, West Virginia

Pitch Potential Emissions (lbs/yr)

Pollutant	Tank 801 CTP	Tank 801 Type A Pitch CTP	Tank 801 Type A Pitch Petro	Tank 801 Type A Pitch Total	Tank 801 Maximum	Tank 802 CTP	Tank 802 Type A Pitch CTP	Tank 802 Type A Pitch Petro	Tank 802 Type A Pitch Total	Tank 802 Maximum	Tank 804 CTP	Tank 804 Type A Pitch CTP	Tank 804 Type A Pitch Petro	Tank 804 Type A Pitch Total	Tank 804 Maximum	Tank 805 CTP	Tank 805 Type A Pitch CTP	Tank 805 Type A Pitch Petro	Tank 805 Type A Pitch Total	Tank 805 Maximum	Tank 806 CTP	Tank 806 Type A Pitch CTP	Tank 806 Type A Pitch Petro	Tank 806 Type A Pitch Total	Tank 806 Maximum	Tank 808 CTP	Tank 808 Type A Pitch CTP	Tank 808 Type A Pitch Petro	Tank 808 Type A Pitch Total	Tank 808 Maximum	Potential Emissions
VOC	229.31	229.31	286.73	516.03	516.03	229.31	229.31	286.73	516.03	516.03	228.52	228.52	285.18	513.71	513.71	226.46	226.46	281.21	507.66	507.66	229.35	229.35	286.71	516.07	516.07	229.35	229.35	286.71	516.07	516.07	3,085.56
Benzene	0.00	0.00	0.00	0.00	0.00	0.00	0.00	0.00	0.00	0.00	0.00	0.00	0.00	0.00	0.00	0.00	0.00	0.00	0.00	0.00	0.00	0.00	0.00	0.00	0.00	0.00	0.00	0.00	0.00	0.00	0.00
Biphenyl	0.00	0.00	0.00	0.00	0.00	0.00	0.00	0.00	0.00	0.00	0.00	0.00	0.00	0.00	0.00	0.00	0.00	0.00	0.00	0.00	0.00	0.00	0.00	0.00	0.00	0.00	0.00	0.00	0.00	0.00	0.00
m-Cresol	0.00	0.00	0.00	0.00	0.00	0.00	0.00	0.00	0.00	0.00	0.00	0.00	0.00	0.00	0.00	0.00	0.00	0.00	0.00	0.00	0.00	0.00	0.00	0.00	0.00	0.00	0.00	0.00	0.00	0.00	0.00
o-Cresol	0.00	0.00	0.00	0.00	0.00	0.00	0.00	0.00	0.00	0.00	0.00	0.00	0.00	0.00	0.00	0.00	0.00	0.00	0.00	0.00	0.00	0.00	0.00	0.00	0.00	0.00	0.00	0.00	0.00	0.00	0.00
p-Cresol	0.00	0.00	0.00	0.00	0.00	0.00	0.00	0.00	0.00	0.00	0.00	0.00	0.00	0.00	0.00	0.00	0.00	0.00	0.00	0.00	0.00	0.00	0.00	0.00	0.00	0.00	0.00	0.00	0.00	0.00	0.00
Cumene	0.00	0.00	0.00	0.00	0.00	0.00	0.00	0.00	0.00	0.00	0.00	0.00	0.00	0.00	0.00	0.00	0.00	0.00	0.00	0.00	0.00	0.00	0.00	0.00	0.00	0.00	0.00	0.00	0.00	0.00	0.00
Dibenzofuran	60.17	60.17	0.00	60.17	60.17	60.17	60.17	0.00	60.17	60.17	59.96	59.96	0.00	59.96	59.96	59.42	59.42	0.00	59.42	59.42	60.18	60.18	0.00	60.18	60.18	60.18	60.18	0.00	60.18	60.18	360.06
Ethylbenzene	0.00	0.00	0.00	0.00	0.00	0.00	0.00	0.00	0.00	0.00	0.00	0.00	0.00	0.00	0.00	0.00	0.00	0.00	0.00	0.00	0.00	0.00	0.00	0.00	0.00	0.00	0.00	0.00	0.00	0.00	0.00
Naphthalene	0.00	0.00	0.00	0.00	0.00	0.00	0.00	0.00	0.00	0.00	0.00	0.00	0.00	0.00	0.00	0.00	0.00	0.00	0.00	0.00	0.00	0.00	0.00	0.00	0.00	0.00	0.00	0.00	0.00	0.00	0.00
Phenol	0.00	0.00	0.00	0.00	0.00	0.00	0.00	0.00	0.00	0.00	0.00	0.00	0.00	0.00	0.00	0.00	0.00	0.00	0.00	0.00	0.00	0.00	0.00	0.00	0.00	0.00	0.00	0.00	0.00	0.00	0.00
Quinoline	0.00	0.00	0.00	0.00	0.00	0.00	0.00	0.00	0.00	0.00	0.00	0.00	0.00	0.00	0.00	0.00	0.00	0.00	0.00	0.00	0.00	0.00	0.00	0.00	0.00	0.00	0.00	0.00	0.00	0.00	0.00
Styrene	0.00	0.00	0.00	0.00	0.00	0.00	0.00	0.00	0.00	0.00	0.00	0.00	0.00	0.00	0.00	0.00	0.00	0.00	0.00	0.00	0.00	0.00	0.00	0.00	0.00	0.00	0.00	0.00	0.00	0.00	0.00
Toluene	0.00	0.00	0.00	0.00	0.00	0.00	0.00	0.00	0.00	0.00	0.00	0.00	0.00	0.00	0.00	0.00	0.00	0.00	0.00	0.00	0.00	0.00	0.00	0.00	0.00	0.00	0.00	0.00	0.00	0.00	0.00
m-Xylene	0.00	0.00	0.00	0.00	0.00	0.00	0.00	0.00	0.00	0.00	0.00	0.00	0.00	0.00	0.00	0.00	0.00	0.00	0.00	0.00	0.00	0.00	0.00	0.00	0.00	0.00	0.00	0.00	0.00	0.00	0.00
o-Xylene	0.00	0.00	0.00	0.00	0.00	0.00	0.00	0.00	0.00	0.00	0.00	0.00	0.00	0.00	0.00	0.00	0.00	0.00	0.00	0.00	0.00	0.00	0.00	0.00	0.00	0.00	0.00	0.00	0.00	0.00	0.00
p-Xylene	0.00	0.00	0.00	0.00	0.00	0.00	0.00	0.00	0.00	0.00	0.00	0.00	0.00	0.00	0.00	0.00	0.00	0.00	0.00	0.00	0.00	0.00	0.00	0.00	0.00	0.00	0.00	0.00	0.00	0.00	0.00
Acenaphthene	55.83	55.83	159.39	215.23	215.23	55.83	55.83	159.39	215.23	215.23	55.64	55.64	158.53	214.18	214.18	55.14	55.14	156.32	211.46	211.46	55.84	55.84	159.39	215.23	215.23	55.84	55.84	159.39	215.23	215.23	1,286.55
Acenaphthylene	0.00	0.00	0.00	0.00	0.00	0.00	0.00	0.00	0.00	0.00	0.00	0.00	0.00	0.00	0.00	0.00	0.00	0.00	0.00	0.00	0.00	0.00	0.00	0.00	0.00	0.00	0.00	0.00	0.00	0.00	0.00
Anthracene	14.70	14.70	13.29	27.99	27.99	14.70	14.70	13.29	27.99	27.99	14.65	14.65	13.22	27.87	27.87	14.52	14.52	13.03	27.55	27.55	14.70	14.70	13.29	27.99	27.99	14.70	14.70	13.29	27.99	27.99	167.39
Benzo(a)anthracene	4.81	4.81	0.77	5.58	5.58	4.81	4.81	0.77	5.58	5.58	4.80	4.80	0.77	5.56	5.56	4.75	4.75	0.75	5.51	5.51	4.82	4.82	0.77	5.58	5.58	4.82	4.82	0.77	5.58	5.58	33.41
Benzo(b)fluoranthene	4.97	4.97	0.07	5.05	5.05	4.97	4.97	0.07	5.05	5.05	4.96	4.96	0.07	5.03	5.03	4.91	4.91	0.07	4.98	4.98	4.97	4.97	0.07	5.05	5.05	4.97	4.97	0.07	5.05	5.05	30.19
Benzo(k)fluoranthene	0.33	0.33	0.01	0.33	0.33	0.33	0.33	0.01	0.33	0.33	0.32	0.32	0.01	0.33	0.33	0.32	0.32	0.01	0.33	0.33	0.33	0.33	0.01	0.33	0.33	0.33	0.33	0.01	0.33	0.33	2.00
Benzo(g,h,i)perylene	0.27	0.27	0.00	0.27	0.27	0.27	0.27	0.00	0.27	0.27	0.27	0.27	0.00	0.27	0.27	0.26	0.26	0.00	0.26	0.26	0.27	0.27	0.00	0.27	0.27	0.27	0.27	0.00	0.27	0.27	1.59
Benzo(a)pyrene	1.00	1.00	0.08	1.08	1.08	1.00	1.00	0.08	1.08	1.08	1.00	1.00	0.08	1.08	1.08	0.99	0.99	0.08	1.07	1.07	1.00	1.00	0.08	1.08	1.08	1.00	1.00	0.08	1.08	1.08	6.48
Chrysene	1.36	1.36	0.27	1.63	1.63	1.36	1.36	0.27	1.63	1.63	1.35	1.35	0.27	1.62	1.62	1.34	1.34	0.27	1.61	1.61	1.36	1.36	0.27	1.63	1.63	1.36	1.36	0.27	1.63	1.63	9.74
Dibenzo(a,h)anthracene	0.16	0.16	0.00	0.16	0.16	0.16	0.16	0.00	0.16	0.16	0.16	0.16	0.00	0.16	0.16	0.16	0.16	0.00	0.16	0.16	0.16	0.16	0.00	0.16	0.16	0.16	0.16	0.00	0.16	0.16	0.95
Fluoranthene	47.34	47.34	9.59	56.93	56.93	47.34	47.34	9.59	56.93	56.93	47.18	47.18	9.54	56.71	56.71	46.75	46.75	9.40	56.15	56.15	47.35	47.35	9.59	56.94	56.94	47.35	47.35	9.59	56.94	56.94	340.59
Fluorene	4.36	4.36	59.13	63.49	63.49	4.36	4.36	59.13	63.49	63.49	4.35	4.35	58.81	63.16	63.16	4.31	4.31	57.99	62.30	62.30	4.36	4.36	59.13	63.49	63.49	4.36	4.36	59.13	63.49	63.49	379.43
Indeno(1,2,3-cd)pyrene	0.03	0.03	0.00	0.03	0.03	0.03	0.03	0.00	0.03	0.03	0.03	0.03	0.00	0.03	0.03	0.03	0.03	0.00	0.03	0.03	0.03	0.03	0.00	0.03	0.03	0.03	0.03	0.00	0.03	0.03	0.17
Phenanthrene	16.90	16.90	37.91	54.82	54.82	16.90	16.90	37.91	54.82	54.82	16.85	16.85	37.71	54.56	54.56	16.69	16.69	37.19	53.88	53.88	16.91	16.91	37.91	54.82	54.82	16.91	16.91	37.91	54.82	54.82	327.71
Pyrene	12.38	12.38	6.07	18.44	18.44	12.38	12.38	6.07	18.44	18.44	12.34	12.34	6.03	18.37	18.37	12.22	12.22	5.95	18.17	18.17	12.38	12.38	6.07	18.45	18.45	12.38	12.38	6.07	18.45	18.45	110.32
Total HAP	224.61	224.61	286.58	511.19	511.19	224.61	224.61	286.58	511.19	511.19	223.84	223.84	285.04	508.88	508.88	221.82	221.82	281.07	502.88	502.88	224.65	224.65	286.57	511.22	511.22	224.65	224.65	286.57	511.22	511.22	3,056.60
Total POM	224.61	224.61	286.58	511.19	511.19	224.61	224.61	286.58	511.19	511.19	223.84	223.84	285.04	508.88	508.88	221.82	221.82	281.07	502.88	502.88	224.65	224.65	286.57	511.22	511.22	224.65	224.65	286.57	511.22	511.22	3,056.60

Table 5-2C. 2018 Potential Emissions Inventory, Storage Tanks, Summary of Emissions for 100% Petro Tar Distillation
Koppers Inc., Follansbee Tar Plant, Follansbee, West Virginia

	Potential Emissions (lbs/yr)																	
	Petro Tar			Petro Distillate								Petro Pitch						
Pollutant	Tank 6	Tank 50	Potential Emissions	Tank 7	Tank 9	Tank 221	Tank 222	Tank 223	Tank 224	Tank 10	Potential Emissions	Tank 801	Tank 802	Tank 804	Tank 805	Tank 806	Tank 808	Potential Emissions
VOC	12.37	13.56	25.92	21.76	21.76	12.23	12.23	12.23	12.23	13.16	105.58	217.97	217.97	216.43	212.45	217.96	217.96	1,300.76
Benzene	0.00	0.00	0.00	3.47	3.47	1.95	1.95	1.95	1.95	2.10	16.85	0.00	0.00	0.00	0.00	0.00	0.00	0.00
Biphenyl	0.00	0.00	0.00	0.18	0.18	0.10	0.10	0.10	0.10	0.11	0.88	0.00	0.00	0.00	0.00	0.00	0.00	0.00
m-Cresol	0.00	0.00	0.00	0.20	0.20	0.11	0.11	0.11	0.11	0.12	0.97	0.00	0.00	0.00	0.00	0.00	0.00	0.00
o-Cresol	0.00	0.00	0.00	0.27	0.27	0.15	0.15	0.15	0.15	0.16	1.32	0.00	0.00	0.00	0.00	0.00	0.00	0.00
p-Cresol	0.00	0.00	0.00	0.17	0.17	0.09	0.09	0.09	0.09	0.10	0.81	0.00	0.00	0.00	0.00	0.00	0.00	0.00
Cumene	0.00	0.00	0.00	0.00	0.00	0.00	0.00	0.00	0.00	0.00	0.00	0.00	0.00	0.00	0.00	0.00	0.00	0.00
Dibenzofuran	0.00	0.00	0.00	0.04	0.04	0.02	0.02	0.02	0.02	0.02	0.18	0.00	0.00	0.00	0.00	0.00	0.00	0.00
Ethylbenzene	0.00	0.00	0.00	0.00	0.00	0.00	0.00	0.00	0.00	0.00	0.00	0.00	0.00	0.00	0.00	0.00	0.00	0.00
Naphthalene	0.00	0.00	0.00	7.14	7.14	4.01	4.01	4.01	4.01	4.32	34.65	0.00	0.00	0.00	0.00	0.00	0.00	0.00
Phenol	0.00	0.00	0.00	0.12	0.12	0.07	0.07	0.07	0.07	0.07	0.56	0.00	0.00	0.00	0.00	0.00	0.00	0.00
Quinoline	0.00	0.00	0.00	0.21	0.21	0.12	0.12	0.12	0.12	0.13	1.03	0.00	0.00	0.00	0.00	0.00	0.00	0.00
Styrene	0.00	0.00	0.00	0.21	0.21	0.12	0.12	0.12	0.12	0.13	1.02	0.00	0.00	0.00	0.00	0.00	0.00	0.00
Toluene	0.00	0.00	0.00	2.36	2.36	1.33	1.33	1.33	1.33	1.43	11.48	0.00	0.00	0.00	0.00	0.00	0.00	0.00
m-Xylene	0.00	0.00	0.00	0.53	0.53	0.30	0.30	0.30	0.30	0.32	2.55	0.00	0.00	0.00	0.00	0.00	0.00	0.00
o-Xylene	0.00	0.00	0.00	0.33	0.33	0.19	0.19	0.19	0.19	0.20	1.60	0.00	0.00	0.00	0.00	0.00	0.00	0.00
p-Xylene	0.00	0.00	0.00	0.54	0.54	0.30	0.30	0.30	0.30	0.33	2.63	0.00	0.00	0.00	0.00	0.00	0.00	0.00
Acenaphthene	6.87	7.54	14.41	0.29	0.29	0.16	0.16	0.16	0.16	0.17	1.40	121.17	121.17	120.32	118.10	121.17	121.17	723.10
Acenaphthylene	0.00	0.00	0.00	0.22	0.22	0.12	0.12	0.12	0.12	0.13	1.05	0.00	0.00	0.00	0.00	0.00	0.00	0.00
Anthracene	0.57	0.63	1.20	0.01	0.01	0.00	0.00	0.00	0.00	0.00	0.03	10.10	10.10	10.03	9.85	10.10	10.10	60.29
Benzo(a)anthracene	0.03	0.04	0.07	0.00	0.00	0.00	0.00	0.00	0.00	0.00	0.00	0.58	0.58	0.58	0.57	0.58	0.58	3.49
Benzo(b)fluoranthene	0.00	0.00	0.01	0.00	0.00	0.00	0.00	0.00	0.00	0.00	0.00	0.05	0.05	0.05	0.05	0.05	0.05	0.33
Benzo(k)fluoranthene	0.00	0.00	0.00	0.00	0.00	0.00	0.00	0.00	0.00	0.00	0.00	0.01	0.01	0.01	0.01	0.01	0.01	0.04
Benzo(g,h,i)perylene	0.00	0.00	0.00	0.00	0.00	0.00	0.00	0.00	0.00	0.00	0.00	0.00	0.00	0.00	0.00	0.00	0.00	0.00
Benzo(a)pyrene	0.00	0.00	0.01	0.00	0.00	0.00	0.00	0.00	0.00	0.00	0.00	0.06	0.06	0.06	0.06	0.06	0.06	0.36
Chrysene	0.01	0.01	0.02	0.00	0.00	0.00	0.00	0.00	0.00	0.00	0.00	0.21	0.21	0.20	0.20	0.21	0.21	1.23
Dibenzo(a,h)anthracene	0.00	0.00	0.00	0.00	0.00	0.00	0.00	0.00	0.00	0.00	0.00	0.00	0.00	0.00	0.00	0.00	0.00	0.00
Fluoranthene	0.41	0.45	0.87	0.01	0.01	0.00	0.00	0.00	0.00	0.00	0.03	7.29	7.29	7.24	7.10	7.29	7.29	43.50
Fluorene	2.55	2.80	5.35	0.09	0.09	0.05	0.05	0.05	0.05	0.05	0.42	44.95	44.95	44.64	43.82	44.95	44.95	268.26
Indeno(1,2,3-cd)pyrene	0.00	0.00	0.00	0.00	0.00	0.00	0.00	0.00	0.00	0.00	0.00	0.00	0.00	0.00	0.00	0.00	0.00	0.00
Phenanthrene	1.64	1.79	3.43	0.02	0.02	0.01	0.01	0.01	0.01	0.01	0.09	28.82	28.82	28.62	28.09	28.82	28.82	172.01
Pyrene	0.26	0.29	0.55	0.00	0.00	0.00	0.00	0.00	0.00	0.00	0.00	4.61	4.61	4.58	4.49	4.61	4.61	27.52
Total HAP	12.36	13.55	25.91	16.39	16.39	9.21	9.21	9.21	9.21	9.91	79.54	217.86	217.86	216.32	212.35	217.85	217.85	1,300.11
Total POM	12.36	13.55	25.91	8.19	8.19	4.60	4.60	4.60	4.60	4.95	39.75	217.86	217.86	216.32	212.35	217.85	217.85	1,300.11

Table 5-2D. 2018 Potential Emissions Inventory, Storage Tanks, Summary of Emissions for 100% Decant Oil Distillation
Koppers Inc., Follansbee Tar Plant, Follansbee, West Virginia

	Potential Emissions (lbs/yr)												
	Decant Oil			Decant Oil Distillate			Decant Pitch						
Pollutant	Tank 6	Tank 50	Potential Emissions	Tank 223	Tank 10	Potential Emissions	Tank 801	Tank 802	Tank 804	Tank 805	Tank 806	Tank 808	Potential Emissions
VOC	81.91	90.05	171.96	9.56	9.79	19.35	247.44	247.44	245.90	241.92	247.43	247.43	1,477.55
Benzene	0.00	0.00	0.00	0.00	0.00	0.00	0.00	0.00	0.00	0.00	0.00	0.00	0.00
Biphenyl	0.00	0.00	0.00	0.03	0.03	0.06	0.00	0.00	0.00	0.00	0.00	0.00	0.00
m-Cresol	0.00	0.00	0.00	0.02	0.03	0.05	0.00	0.00	0.00	0.00	0.00	0.00	0.00
o-Cresol	0.00	0.00	0.00	0.06	0.06	0.12	0.00	0.00	0.00	0.00	0.00	0.00	0.00
p-Cresol	0.00	0.00	0.00	0.02	0.02	0.04	0.00	0.00	0.00	0.00	0.00	0.00	0.00
Cumene	0.00	0.00	0.00	0.00	0.00	0.00	0.00	0.00	0.00	0.00	0.00	0.00	0.00
Dibenzofuran	0.05	0.06	0.11	0.01	0.01	0.02	0.00	0.00	0.00	0.00	0.00	0.00	0.00
Ethylbenzene	0.00	0.00	0.00	0.66	0.68	1.34	0.00	0.00	0.00	0.00	0.00	0.00	0.00
Naphthalene	10.20	11.21	21.41	0.57	0.59	1.16	0.00	0.00	0.00	0.00	0.00	0.00	0.00
Phenol	0.00	0.00	0.00	0.02	0.02	0.05	0.00	0.00	0.00	0.00	0.00	0.00	0.00
Quinoline	0.00	0.00	0.00	0.01	0.01	0.02	0.00	0.00	0.00	0.00	0.00	0.00	0.00
Styrene	0.00	0.00	0.00	0.00	0.00	0.00	0.00	0.00	0.00	0.00	0.00	0.00	0.00
Toluene	0.00	0.00	0.00	0.00	0.00	0.00	0.00	0.00	0.00	0.00	0.00	0.00	0.00
m-Xylene	0.00	0.00	0.00	0.38	0.39	0.78	0.00	0.00	0.00	0.00	0.00	0.00	0.00
o-Xylene	0.00	0.00	0.00	0.16	0.16	0.32	0.00	0.00	0.00	0.00	0.00	0.00	0.00
p-Xylene	0.00	0.00	0.00	0.40	0.41	0.80	0.00	0.00	0.00	0.00	0.00	0.00	0.00
Acenaphthene	0.15	0.16	0.31	0.02	0.02	0.05	137.55	137.55	136.69	134.48	137.55	137.55	821.38
Acenaphthylene	0.12	0.13	0.24	0.03	0.04	0.07	0.00	0.00	0.00	0.00	0.00	0.00	0.00
Anthracene	0.01	0.01	0.01	0.00	0.00	0.00	11.47	11.47	11.40	11.21	11.47	11.47	68.49
Benzo(a)anthracene	0.00	0.00	0.00	0.00	0.00	0.00	0.66	0.66	0.66	0.65	0.66	0.66	3.96
Benzo(b)fluoranthene	0.00	0.00	0.00	0.00	0.00	0.00	0.06	0.06	0.06	0.06	0.06	0.06	0.37
Benzo(k)fluoranthene	0.00	0.00	0.00	0.00	0.00	0.00	0.01	0.01	0.01	0.01	0.01	0.01	0.05
Benzo(g,h,i)perylene	0.00	0.00	0.00	0.00	0.00	0.00	0.00	0.00	0.00	0.00	0.00	0.00	0.00
Benzo(a)pyrene	0.00	0.00	0.00	0.00	0.00	0.00	0.07	0.07	0.07	0.07	0.07	0.07	0.41
Chrysene	0.00	0.00	0.00	0.00	0.00	0.00	0.23	0.23	0.23	0.23	0.23	0.23	1.40
Dibenzo(a,h)anthracene	0.00	0.00	0.00	0.00	0.00	0.00	0.00	0.00	0.00	0.00	0.00	0.00	0.00
Fluoranthene	0.02	0.02	0.05	0.00	0.00	0.00	8.27	8.27	8.22	8.09	8.27	8.27	49.41
Fluorene	0.02	0.02	0.03	0.02	0.02	0.04	51.03	51.03	50.71	49.89	51.03	51.03	304.72
Indeno(1,2,3-cd)pyrene	0.00	0.00	0.00	0.00	0.00	0.00	0.00	0.00	0.00	0.00	0.00	0.00	0.00
Phenanthrene	0.04	0.04	0.08	0.00	0.00	0.01	32.72	32.72	32.52	31.99	32.72	32.72	195.38
Pyrene	0.00	0.01	0.01	0.00	0.00	0.00	5.23	5.23	5.20	5.12	5.23	5.23	31.26
Total HAP	11.66	10.61	22.26	2.44	2.50	4.94	247.32	247.32	245.77	241.80	247.30	247.30	1,476.81
Total POM	11.66	10.61	22.26	0.71	0.72	1.43	247.32	247.32	245.77	241.80	247.30	247.30	1,476.81

Table 5-3. 2018 Potential Emissions Inventory, Crude Tar Storage Tanks Emission Calculations
Koppers Inc., Follansbee Tar Plant, Follansbee, West Virginia
Note: Emissions were estimated using methodology outlined in AP-42, Section 7.1, Organic Liquid Storage Tanks, 11/06

Tank ID	Contents	Control Device	% Control	Throughput (gal)	No. Days in Service	Temp °F	D (ft)	Hs (ft)	H_L (ft)	V (gal)	Turn overs	Heat (Y/N)	DP_B (psia)	a	I	T_{LA} (R)	Mv (lb/mol)	Pva (psia)	Tsa (R)	Tax (R)	Tan (R)	DT_A (R)	Tsa (R)	Tsx (R)	Tsn (R)	DTs (R)	T_{LX} (R)	T_{LN} (R)	P_{TX} (psia)	P_{TN} (psia)	DP_V (psia)	Vv (ft³)	H_{VO} (ft)	T_B (R)	Wv lb/ft³	K_E	DT_v (R)	K_S	Turnover Factor
Tank 48	Crude Tar	Flare or TO	98	19,500,000	365	220	50.0	35.0	17.5	514,077	37.9	Y		0.89	1.203	679.44	95.72 at T_{LA}	0.5385 at T_{LA}	510.25	519.8	509.7	19.1	680	690	670	20	690	670	0.6528 at T_{LX}	0.4517 at T_{LN}	0.2011	35,384	18.02	679.00	0.0071	0.035	14.4	0.660	1.000

Uncontrolled VOC Emissions L_S (lb/yr)	L_W (lb/yr)	Total (lb/yr)		% wgt vapors at T_{LA}	Controlled VOC Emissions L_S (lb/yr)	L_W (lb/yr)	Total (lb/yr)
2,133.89	23,922.80	26,056.70	VOC	100.00	42.68	478.46	521.13
			Benzene	39.279	16.76	187.93	204.70
			Biphenyl	0.182	0.08	0.87	0.95
			m-Cresol	0.646	0.28	3.09	3.36
			o-Cresol	0.574	0.25	2.75	2.99
			p-Cresol	0.610	0.26	2.92	3.18
			Cumene				
			Dibenzofuran	0.120	0.05	0.57	0.62
			Ethylbenzene	0.444	0.19	2.13	2.32
			Naphthalene	16.916	7.22	80.93	88.15
			Phenol	2.141	0.91	10.24	11.16
			Quinoline	0.402	0.17	1.92	2.10
			Styrene	1.726	0.74	8.26	8.99
			Toluene	11.929	5.09	57.08	62.17
			m-Xylene	3.874	1.65	18.54	20.19
			o-Xylene	1.629	0.70	7.79	8.49
			p-Xylene	3.985	1.70	19.07	20.77
			Acenaphthene	0.610	0.26	2.92	3.18
			Acenaphthylene	0.468	0.20	2.24	2.44
			Anthracene	0.025	0.01	0.12	0.13
			Benzo(a)anthracene	0.000	0.00	0.00	0.00
			Benzo(b)fluoranthene	0.000	0.00	0.00	0.00
			Benzo(k)fluoranthene	0.000	0.00	0.00	0.00
			Benzo(g,h,i)perylene	0.000	0.00	0.00	0.00
			Benzo(a)pyrene	0.000	0.00	0.00	0.00
			Chrysene	0.000	0.00	0.00	0.00
			Dibenzo(a,h)anthracene	0.000	0.00	0.00	0.00
			Fluoranthene	0.032	0.01	0.15	0.17
			Fluorene	0.269	0.11	1.29	1.40
			Indeno(1,2,3-cd)pyrene	0.000	0.00	0.00	0.00
			Phenanthrene	0.055	0.02	0.26	0.28
			Pyrene	0.001	0.00	0.01	0.01

Table 5-3. 2018 Potential Emissions Inventory, Crude Tar Storage Tanks Emission Calculations
Koppers Inc., Follansbee Tar Plant, Follansbee, West Virginia
Note: Emissions were estimated using methodology outlined in AP-42, Section 7.1, Organic Liquid Storage Tanks, 11/06

Tank ID	Contents	Control Device	% Control	Throughput (gal)	No. Days in Service	Temp °F	D (ft)	Hs (ft)	H_L (ft)	V (gal)	Turn overs	Heat (Y/N)	DP_B (psia)	a	b	T_{LA} (R)	Mv (lb/mol)	Pva (psia)	Taa (R)	Tax (R)	Tan (R)	DT_A (R)	Tsa (R)	Tsx (R)	Tsn (R)	DTs (R)	T_{LX} (R)	T_{LN} (R)	P_{TX} (psia)	P_{TN} (psia)	DP_V (psia)	Vv (ft³)	H_{VO} (ft)	T_B (R)	Wv lb/ft³	K_E	DT_v (R)	K_S	Turnover Factor
Tank 49	Crude Tar	Flare or TO	98	19,500,000	365	220	50.0	35.0	17.5	514,077	37.9	Y		0.89	1.203	679.44	95.72 at T_{LA}	0.5385 at T_{LA}	510.25	519.8	500.7	19.1	680	690	670	20	690	670	0.6528 at T_{LX}	0.4517 at T_{LN}	0.2011	35,384	18.02	679.00	0.0071	0.035	14.4	0.660	1.000

Uncontrolled VOC Emissions L_S (lb/yr)	L_W (lb/yr)	Total (lb/yr)		% wgt vapors at T_{LA}	Controlled VOC Emissions L_S (lb/yr)	L_W (lb/yr)	Total (lb/yr)
2,133.89	23,922.80	26,056.70	**VOC**	100.00	42.68	478.46	521.13
			Benzene	39.279	16.76	187.93	204.70
			Biphenyl	0.182	0.08	0.87	0.95
			m-Cresol	0.646	0.28	3.09	3.36
			o-Cresol	0.574	0.25	2.75	2.99
			p-Cresol	0.610	0.26	2.92	3.18
			Cumene				
			Dibenzofuran	0.120	0.05	0.57	0.62
			Ethylbenzene	0.444	0.19	2.13	2.32
			Naphthalene	16.916	7.22	80.93	88.15
			Phenol	2.141	0.91	10.24	11.16
			Quinoline	0.402	0.17	1.92	2.10
			Styrene	1.726	0.74	8.26	8.99
			Toluene	11.929	5.09	57.08	62.17
			m-Xylene	3.874	1.65	18.54	20.19
			o-Xylene	1.629	0.70	7.79	8.49
			p-Xylene	3.985	1.70	19.07	20.77
			Acenaphthene	0.610	0.26	2.92	3.18
			Acenaphthylene	0.468	0.20	2.24	2.44
			Anthracene	0.025	0.01	0.12	0.13
			Benzo(a)anthracene	0.000	0.00	0.00	0.00
			Benzo(b)fluoranthene	0.000	0.00	0.00	0.00
			Benzo(k)fluoranthene	0.000	0.00	0.00	0.00
			Benzo(g,h,i)perylene	0.000	0.00	0.00	0.00
			Benzo(a)pyrene	0.000	0.00	0.00	0.00
			Chrysene	0.000	0.00	0.00	0.00
			Dibenzo(a,h)anthracene	0.000	0.00	0.00	0.00
			Fluoranthene	0.032	0.01	0.15	0.17
			Fluorene	0.269	0.11	1.29	1.40
			Indeno(1,2,3-cd)pyrene	0.000	0.00	0.00	0.00
			Phenanthrene	0.055	0.02	0.26	0.28
			Pyrene	0.001	0.00	0.01	0.01

Tank ID	Contents	Control Device	% Control	Throughput (gal)	No. Days in Service	Temp °F	D (ft)	Hs (ft)	H_L (ft)	V (gal)	Turn overs	Heat (Y/N)	DP_B (psia)	a	b	T_{LA} (R)	Mv (lb/mol)	Pva (psia)	Taa (R)	Tax (R)	Tan (R)	DT_A (R)	Tsa (R)	Tsx (R)	Tsn (R)	DTs (R)	T_{LX} (R)	T_{LN} (R)	P_{TX} (psia)	P_{TN} (psia)	DP_V (psia)	Vv (ft³)	H_{VO} (ft)	T_B (R)	Wv lb/ft³	K_E	DT_v (R)	K_S	Turnover Factor
Tank 50	Crude Tar	Flare or TO	98	19,500,000	365	220	72.0	35.0	17.5	1,065,991	18.3	Y		0.89	1.203	679.44	95.72 at T_{LA}	0.5385 at T_{LA}	510.25	519.8	500.7	19.1	680	690	670	20	690	670	0.6528 at T_{LX}	0.4517 at T_{LN}	0.2011	74,305	18.25	679.00	0.0071	0.035	14.4	0.658	1.000

Uncontrolled VOC Emissions L_S (lb/yr)	L_W (lb/yr)	Total (lb/yr)		% wgt vapors at T_{LA}	Controlled VOC Emissions L_S (lb/yr)	L_W (lb/yr)	Total (lb/yr)
4,461.84	23,922.80	28,384.64	**VOC**	100.00	89.24	478.46	567.69
			Benzene	39.279	35.05	187.93	222.98
			Biphenyl	0.182	0.16	0.87	1.04
			m-Cresol	0.646	0.58	3.09	3.67
			o-Cresol	0.574	0.51	2.75	3.26
			p-Cresol	0.610	0.54	2.92	3.46
			Cumene				
			Dibenzofuran	0.120	0.11	0.57	0.68
			Ethylbenzene	0.444	0.40	2.13	2.52
			Naphthalene	16.916	15.10	80.93	96.03
			Phenol	2.141	1.91	10.24	12.15
			Quinoline	0.402	0.36	1.92	2.28
			Styrene	1.726	1.54	8.26	9.80
			Toluene	11.929	10.65	57.08	67.72
			m-Xylene	3.874	3.46	18.54	21.99
			o-Xylene	1.629	1.45	7.79	9.25
			p-Xylene	3.985	3.56	19.07	22.63
			Acenaphthene	0.610	0.54	2.92	3.46
			Acenaphthylene	0.468	0.42	2.24	2.66
			Anthracene	0.025	0.02	0.12	0.14
			Benzo(a)anthracene	0.000	0.00	0.00	0.00
			Benzo(b)fluoranthene	0.000	0.00	0.00	0.00
			Benzo(k)fluoranthene	0.000	0.00	0.00	0.00
			Benzo(g,h,i)perylene	0.000	0.00	0.00	0.00
			Benzo(a)pyrene	0.000	0.00	0.00	0.00
			Chrysene	0.000	0.00	0.00	0.00
			Dibenzo(a,h)anthracene	0.000	0.00	0.00	0.00
			Fluoranthene	0.032	0.03	0.15	0.18
			Fluorene	0.269	0.24	1.29	1.53
			Indeno(1,2,3-cd)pyrene	0.000	0.00	0.00	0.00
			Phenanthrene	0.055	0.05	0.26	0.31
			Pyrene	0.001	0.00	0.01	0.01

Table 5-3. 2018 Potential Emissions Inventory, Crude Tar Storage Tanks Emission Calculations
Koppers Inc., Follansbee Tar Plant, Follansbee, West Virginia

Note: Emissions were estimated using methodology outlined in AP-42, Section 7.1, Organic Liquid Storage Tanks, 11/06

Tank ID	Contents	Control Device	% Control	Throughput (gal)	No. Days in Service	Temp °F	D (ft)	Hs (ft)	H_L (ft)	V (gal)	Turn overs	Heat (Y/N)	DP_B (psia)	a	I	T_{LA} (R)	Mv (lb/mol)	Pva (psia)	Taa (R)	Tax (R)	Tan (R)	DT_A (R)	Tsa (R)	Tsx (R)	Tsn (R)	DTs (R)	T_{LX} (R)	T_{LN} (R)	P_{TX} (psia)	P_{TN} (psia)	DP_V (psia)	Vv (ft³)	H_{VO} (ft)	T_B (R)	Wv lb/ft³	K_E	DT_v (R)	K_S	Turnover Factor
Tank 6	Crude Tar	Flare or TO	98	19,500,000	365	220	50.0	35.3	17.7	518,484	37.6	Y		0.89	1.203	679.44	95.72 at T_{LX}	0.5385 at T_{LX}	510.25	519.8	500.7	19.1	680	690	670	20	690	670	0.6528 at T_{TX}	0.4517 at T_{TN}	0.2011	35.678	18.17	679.00	0.0071	0.035	14.4	0.658	1.000

Uncontrolled VOC Emissions L_S (lb/yr)	L_W (lb/yr)	Total (lb/yr)		% wgt vapors at T_{LX}	Controlled VOC Emissions L_S (lb/yr)	L_W (lb/yr)	Total (lb/yr)
2,145.59	23,922.80	26,068.39	VOC	100.00	42.91	478.46	521.37
			Benzene	39.279	16.86	187.93	204.79
			Biphenyl	0.182	0.08	0.87	0.95
			m-Cresol	0.646	0.28	3.09	3.37
			o-Cresol	0.574	0.25	2.75	2.99
			p-Cresol	0.610	0.26	2.92	3.18
			Cumene				
			Dibenzofuran	0.120	0.05	0.57	0.62
			Ethylbenzene	0.444	0.19	2.13	2.32
			Naphthalene	16.916	7.26	80.93	88.19
			Phenol	2.141	0.92	10.24	11.16
			Quinoline	0.402	0.17	1.92	2.10
			Styrene	1.726	0.74	8.26	9.00
			Toluene	11.929	5.12	57.08	62.20
			m-Xylene	3.874	1.66	18.54	20.20
			o-Xylene	1.629	0.70	7.79	8.49
			p-Xylene	3.985	1.71	19.07	20.78
			Acenaphthene	0.610	0.26	2.92	3.18
			Acenaphthylene	0.468	0.20	2.24	2.44
			Anthracene	0.025	0.01	0.12	0.13
			Benzo(a)anthracene	0.000	0.00	0.00	0.00
			Benzo(b)fluoranthene	0.000	0.00	0.00	0.00
			Benzo(k)fluoranthene	0.000	0.00	0.00	0.00
			Benzo(g,h,i)perylene	0.000	0.00	0.00	0.00
			Benzo(a)pyrene	0.000	0.00	0.00	0.00
			Chrysene	0.000	0.00	0.00	0.00
			Dibenzo(a,h)anthracene	0.000	0.00	0.00	0.00
			Fluoranthene	0.032	0.01	0.15	0.17
			Fluorene	0.269	0.12	1.29	1.40
			Indeno(1,2,3-cd)pyrene	0.000	0.00	0.00	0.00
			Phenanthrene	0.055	0.02	0.26	0.29
			Pyrene	0.001	0.00	0.01	0.01

Table 5-4. 2018 Potential Emissions Inventory, Refined Chemical Oil Storage Tanks Emission Calculations
Koppers Inc., Follansbee Tar Plant, Follansbee, West Virginia
Note: Emissions were estimated using methodology outlined in AP-42, Section 7.1, Organic Liquid Storage Tanks, 11/06

Tank ID	Contents	Control Device	% Control	Throughput (gal)	No. Days in Service	Temp °F	D (ft)	Hs (ft)	HL (ft)	V (gal)	Turn overs	Heat (Y/N)	DP_B (psia)	a	b	T_{LA} (R)	Mv (lb/mol)	Pva (psia)	Taa (R)	Tax (R)	Tan (R)	DT_A (R)	Tsa (R)	Tsx (R)	Tsn (R)	DTs (R)	T_{LX} (R)	T_{LN} (R)	P_{LX} (psia)	P_{LN} (psia)	DP_V (psia)	Vv (ft³)	H_{VO} (ft)	T_B (R)	Wv lb/ft³	K_E	DT_v (R)	K_S	Turnover Factor
Tank 89	Crude RCO	Flare or TO	98	19,200,000	365	210	24.5	30.0	15.0	105,797	181.5	Y		0.89	1.203	669.44	111.21 at T_{LA}	0.4737 at T_{LA}	510.25	519.8	500.7	19.1	670	680	660	20	680	660	0.5920 at T_{LX}	0.3863 at T_{LN}	0.2056	7,192	15.26	669.00	0.0073	0.036	14.4	0.723	1.000

Uncontrolled VOC Emissions L_S (lb/yr)	L_W (lb/yr)	Total (lb/yr)		% wgt vapors at T_{LA}	Controlled VOC Emissions L_S (lb/yr)	L_W (lb/yr)	Total (lb/yr)
500.63	24,074.50	24,575.13	**VOC**	100.00	10.01	481.49	491.50
			Benzene	14.285	1.43	68.78	70.21
			Biphenyl	0.141	0.01	0.68	0.69
			m-Cresol	0.162	0.02	0.78	0.79
			o-Cresol				
			p-Cresol	0.136	0.01	0.65	0.67
			Cumene				
			Dibenzofuran	0.048	0.00	0.23	0.24
			Ethylbenzene	0.983	0.10	4.73	4.83
			Naphthalene	42.240	4.23	203.38	207.61
			Phenol	0.231	0.02	1.11	1.14
			Quinoline	0.320	0.03	1.54	1.57
			Styrene	2.926	0.29	14.09	14.38
			Toluene	5.912	0.59	28.47	29.06
			m-Xylene	2.243	0.22	10.80	11.03
			o-Xylene	1.254	0.13	6.04	6.16
			p-Xylene	2.311	0.23	11.13	11.36
			Acenaphthene	0.313	0.03	1.51	1.54
			Acenaphthylene	0.133	0.01	0.64	0.65
			Anthracene	0.002	0.00	0.01	0.01
			Benzo(a)anthracene				
			Benzo(b)fluoranthene				
			Benzo(k)fluoranthene				
			Benzo(g,h,i)perylene				
			Benzo(a)pyrene				
			Chrysene				
			Dibenzo(a,h)anthracene				
			Fluoranthene	0.003	0.00	0.02	0.02
			Fluorene	0.103	0.01	0.50	0.51
			Indeno(1,2,3-cd)pyrene				
			Phenanthrene	0.011	0.00	0.05	0.05
			Pyrene	0.000	0.00	0.00	0.00

Table 5-4. 2018 Potential Emissions Inventory, Refined Chemical Oil Storage Tanks Emission Calculations
Koppers Inc., Follansbee Tar Plant, Follansbee, West Virginia

Note: Emissions were estimated using methodology outlined in AP-42, Section 7.1, Organic Liquid Storage Tanks, 11/06

Tank ID	Contents	Control Device	% Control	Throughput (gal)	No. Days in Service	Temp °F	D (ft)	Hs (ft)	HL (ft)	V (gal)	Turn overs	Heat (Y/N)	DP_B (psia)	a	b	T_{LA} (R)	Mv (lb/mol)	Pva (psia)	Taa (R)	Tax (R)	Tan (R)	DT_A (R)	Tsa (R)	Tsx (R)	Tsn (R)	DTs (R)	T_{LX} (R)	T_{LN} (R)	P_{LX} (psia)	P_{LN} (psia)	DP_V (psia)	Vv (ft³)	H_{VO} (ft)	T_B (R)	Wv lb/ft³	K_E	DT_v (R)	K_S	Turnover Factor
Tank 56	Crude RCO	Flare or TO	98		365	210	72.0	30.0	15.0	913,707		Y		0.89	1,203	669.44	111.21 at T_{LA}	0.4737 at T_{LA}	510.25	549.8	500.7	19.1	670	680	660	20	680	660	0.5920 at T_{LX}	0.3863 at T_{LN}	0.2056	64.126	15.75	669.00	0.0073	0.036	14.4	0.717	1.000

Uncontrolled VOC Emissions L_S (lb/yr)	L_W (lb/yr)	Total (lb/yr)		% wgt vapors at T_{LA}	Controlled VOC Emissions L_S (lb/yr)	L_W (lb/yr)	Total (lb/yr)
4,424.15		4,424.15	**VOC**	100.00	88.48		88.48
			Benzene	14.285	12.64		12.64
			Biphenyl	0.141	0.12		0.12
			m-Cresol	0.162	0.14		0.14
			o-Cresol				
			p-Cresol	0.136	0.12		0.12
			Cumene				
			Dibenzofuran	0.048	0.04		0.04
			Ethylbenzene	0.983	0.87		0.87
			Naphthalene	42.240	37.38		37.38
			Phenol	0.231	0.20		0.20
			Quinoline	0.320	0.28		0.28
			Styrene	2.926	2.59		2.59
			Toluene	5.912	5.23		5.23
			m-Xylene	2.243	1.98		1.98
			o-Xylene	1.254	1.11		1.11
			p-Xylene	2.311	2.04		2.04
			Acenaphthene	0.313	0.28		0.28
			Acenaphthylene	0.133	0.12		0.12
			Anthracene	0.002	0.00		0.00
			Benzo(a)anthracene				
			Benzo(b)fluoranthene				
			Benzo(k)fluoranthene				
			Benzo(g,h,i)perylene				
			Benzo(a)pyrene				
			Chrysene				
			Dibenzo(a,h)anthracene				
			Fluoranthene	0.003	0.00		0.00
			Fluorene	0.103	0.09		0.09
			Indeno(1,2,3-cd)pyrene				
			Phenanthrene	0.011	0.01		0.01
			Pyrene	0.000	0.00		0.00

Table 5-5. 2018 Potential Emissions Inventory, Crude Distillate Storage Tanks Emission Calculations
Koppers Inc., Follansbee Tar Plant, Follansbee, West Virginia

Note: Emissions were estimated using methodology outlined in AP-42, Section 7.1, Organic Liquid Storage Tanks, 11/06

Tank ID	Contents	Control Device	% Control	Throughput (gal)	No. Days in Service	Temp °F	D (ft)	Hs (ft)	H_E (ft)	V (gal)	Turn overs	Heat (Y/N)	DP_B (psia)	a	b	T_{LA} (R)	Mv (lb/mol)	Pva (psia)	Taa (R)	Tax (R)	Tan (R)	DT_A (R)	Tsa (R)	Tsx (R)	Tsn (R)	DTs (R)	T_{LX} (R)	T_{LN} (R)	P_{LX} (psia)	P_{LN} (psia)	DP_V (psia)	Vv (ft³)	H_{VO} (ft)	T_B (R)	Wv lb/ft³	K_E	DT_v (R)	K_S	Turnover Factor
Tank 223	Crude Distillate	Flare or TO	98	13,500,000	365	200	16.0	36.0	18.0	54,146	249.3	Y		0.89	1,203	659.44	129.22 at T_{LA}	0.0456 at T_{LA}	510.25	519.8	500.7	19.1	660	670	650	20	670	650	0.0592 at T_{LX}	0.0358 at T_{LN}	0.0234	3,653	18.17	659.00	0.0008	0.023	14.4	0.958	1.000

Uncontrolled VOC Emissions L_S (lb/yr)	L_W (lb/yr)	Total (lb/yr)		% wgt vapors at T_{LA}	Controlled VOC Emissions L_S (lb/yr)	L_W (lb/yr)	Total (lb/yr)
24.90	1,891.42	1,916.32	VOC	100.00	0.50	37.83	38.33
			Benzene				
			Biphenyl	0.420	0.00	0.16	0.16
			m-Cresol				
			o-Cresol				
			p-Cresol				
			Cumene				
			Dibenzofuran	0.488	0.00	0.18	0.19
			Ethylbenzene				
			Naphthalene	72.047	0.36	27.25	27.61
			Phenol				
			Quinoline	0.967	0.00	0.37	0.37
			Styrene				
			Toluene				
			m-Xylene				
			o-Xylene				
			p-Xylene				
			Acenaphthene	4.765	0.02	1.80	1.83
			Acenaphthylene				
			Anthracene	0.097	0.00	0.04	0.04
			Benzo(a)anthracene	0.001	0.00	0.00	0.00
			Benzo(b)fluoranthene	0.000	0.00	0.00	0.00
			Benzo(k)fluoranthene	0.000	0.00	0.00	0.00
			Benzo(g,h,i)perylene	0.000	0.00	0.00	0.00
			Benzo(a)pyrene	0.000	0.00	0.00	0.00
			Chrysene	0.000	0.00	0.00	0.00
			Dibenzo(a,h)anthracene	0.000	0.00	0.00	0.00
			Fluoranthene	0.281	0.00	0.11	0.11
			Fluorene	1.612	0.01	0.61	0.62
			Indeno(1,2,3-cd)pyrene	0.000	0.00	0.00	0.00
			Phenanthrene	0.429	0.00	0.16	0.16
			Pyrene	0.009	0.00	0.00	0.00

Tank ID	Contents	Control Device	% Control	Throughput (gal)	No. Days in Service	Temp °F	D (ft)	Hs (ft)	H_E (ft)	V (gal)	Turn overs	Heat (Y/N)	DP_B (psia)	a	b	T_{LA} (R)	Mv (lb/mol)	Pva (psia)	Taa (R)	Tax (R)	Tan (R)	DT_A (R)	Tsa (R)	Tsx (R)	Tsn (R)	DTs (R)	T_{LX} (R)	T_{LN} (R)	P_{LX} (psia)	P_{LN} (psia)	DP_V (psia)	Vv (ft³)	H_{VO} (ft)	T_B (R)	Wv lb/ft³	K_E	DT_v (R)	K_S	Turnover Factor
Tank 10	Crude Distillate	Flare or TO	98	13,500,000	365	200	22.0	35.0	17.5	99,525	135.6	Y		0.89	1,203	659.44	129.22 at T_{LA}	0.0456 at T_{LA}	510.25	519.8	500.7	19.1	660	670	650	20	670	650	0.0592 at T_{LX}	0.0358 at T_{LN}	0.0234	6,739	17.73	659.00	0.0008	0.023	14.4	0.959	1.000

Uncontrolled VOC Emissions L_S (lb/yr)	L_W (lb/yr)	Total (lb/yr)		% wgt vapors at T_{LA}	Controlled VOC Emissions L_S (lb/yr)	L_W (lb/yr)	Total (lb/yr)
45.99	1,891.42	1,937.41	VOC	100.00	0.92	37.83	38.75
			Benzene				
			Biphenyl	0.420	0.00	0.16	0.16
			m-Cresol				
			o-Cresol				
			p-Cresol				
			Cumene				
			Dibenzofuran	0.488	0.00	0.18	0.19
			Ethylbenzene				
			Naphthalene	72.047	0.66	27.25	27.92
			Phenol				
			Quinoline	0.967	0.01	0.37	0.37
			Styrene				
			Toluene				
			m-Xylene				
			o-Xylene				
			p-Xylene				
			Acenaphthene	4.765	0.04	1.80	1.85
			Acenaphthylene				
			Anthracene	0.097	0.00	0.04	0.04
			Benzo(a)anthracene	0.001	0.00	0.00	0.00
			Benzo(b)fluoranthene	0.000	0.00	0.00	0.00
			Benzo(k)fluoranthene	0.000	0.00	0.00	0.00
			Benzo(g,h,i)perylene	0.000	0.00	0.00	0.00
			Benzo(a)pyrene	0.000	0.00	0.00	0.00
			Chrysene	0.000	0.00	0.00	0.00
			Dibenzo(a,h)anthracene	0.000	0.00	0.00	0.00
			Fluoranthene	0.281	0.00	0.11	0.11
			Fluorene	1.612	0.01	0.61	0.62
			Indeno(1,2,3-cd)pyrene	0.000	0.00	0.00	0.00
			Phenanthrene	0.429	0.00	0.16	0.17
			Pyrene	0.009	0.00	0.00	0.00

Table 5-6A. 2018 Potential Emissions Inventory, Coal Tar Pitch Storage Tanks
Koppers Inc., Follansbee Tar Plant, Follansbee, West Virginia
Note: Emissions were estimated using methodology outlined in AP-42, Section 7.1, Organic Liquid Storage Tanks, 11/06

Tank ID	Contents	Control Device	% Control	Throughput (gal)	No. Days in Service	Temp °F	D (ft)	Hs (ft)	H_L (ft)	V (gal)	Turn overs	Heat (Y/N)	DP_B (psia)	a	b	T_{LA} (R)	Mv (lb/mol)	Pva (psia)	Taa (R)	Tax (R)	Tan (R)	DT_A (R)	Tsa (R)	Tsx (R)	Tsn (R)	DTs (R)	T_{LX} (R)	T_{LN} (R)	P_{LX} (psia)	P_{LN} (psia)	DP_V (psia)	Vv (ft³)	H_{VO} (ft)	T_B (R)	Wv lb/ft³	K_E	DT_v (R)	K_S	Turnover Factor
Tank 801	Coal Tar Pitch	Scrubber E	80	3,850,000	365	500	26.0	16.0	8.0	63,546	60.6	Y		0.89	1,203	959.44	177.52 at T_{LA}	0.0686 at T_{LA}	510.25	519.8	500.7	19.1	960	970	950	20	970	950	0.0809 at T_{LX}	0.0591 at T_{LN}	0.0218	4,391	8.27	959.00	0.0012	0.016	14.4	0.971	1.000

Uncontrolled VOC Emissions L_S (lb/yr)	L_W (lb/yr)	Total (lb/yr)		% wgt vapors at T_{LA}	Controlled VOC Emissions L_S (lb/yr)	L_W (lb/yr)	Total (lb/yr)
30.37	1,116.16	1,146.53	**VOC**	100.00	6.07	223.23	229.31
			Benzene				
			Biphenyl				
			m-Cresol				
			o-Cresol				
			p-Cresol				
			Cumene				
			Dibenzofuran	26.238	1.59	58.57	60.17
			Ethylbenzene				
			Naphthalene				
			Phenol				
			Quinoline				
			Styrene				
			Toluene				
			m-Xylene				
			o-Xylene				
			p-Xylene				
			Acenaphthene	24.349	1.48	54.35	55.83
			Acenaphthylene				
			Anthracene	6.411	0.39	14.31	14.70
			Benzo(a)anthracene	2.100	0.13	4.69	4.81
			Benzo(b)fluoranthene	2.169	0.13	4.84	4.97
			Benzo(k)fluoranthene	0.142	0.01	0.32	0.33
			Benzo(g,h,i)perylene	0.116	0.01	0.26	0.27
			Benzo(a)pyrene	0.438	0.03	0.98	1.00
			Chrysene	0.592	0.04	1.32	1.36
			Dibenzo(a,h)anthracene	0.069	0.00	0.15	0.16
			Fluoranthene	20.644	1.25	46.08	47.34
			Fluorene	1.902	0.12	4.25	4.36
			Indeno(1,2,3-cd)pyrene	0.012	0.00	0.03	0.03
			Phenanthrene	7.372	0.45	16.46	16.90
			Pyrene	5.398	0.33	12.05	12.38

Tank ID	Contents	Control Device	% Control	Throughput (gal)	No. Days in Service	Temp °F	D (ft)	Hs (ft)	H_L (ft)	V (gal)	Turn overs	Heat (Y/N)	DP_B (psia)	a	b	T_{LA} (R)	Mv (lb/mol)	Pva (psia)	Taa (R)	Tax (R)	Tan (R)	DT_A (R)	Tsa (R)	Tsx (R)	Tsn (R)	DTs (R)	T_{LX} (R)	T_{LN} (R)	P_{LX} (psia)	P_{LN} (psia)	DP_V (psia)	Vv (ft³)	H_{VO} (ft)	T_B (R)	Wv lb/ft³	K_E	DT_v (R)	K_S	Turnover Factor
Tank 802	Coal Tar Pitch	Scrubber E	80	3,850,000	365	500	26.0	16.0	8.0	63,546	60.6	Y		0.89	1,203	959.44	177.52 at T_{LA}	0.0686 at T_{LA}	510.25	519.8	500.7	19.1	960	970	950	20	970	950	0.0809 at T_{LX}	0.0591 at T_{LN}	0.0218	4,391	8.27	959.00	0.0012	0.016	14.4	0.971	1.000

Uncontrolled VOC Emissions L_S (lb/yr)	L_W (lb/yr)	Total (lb/yr)		% wgt vapors at T_{LA}	Controlled VOC Emissions L_S (lb/yr)	L_W (lb/yr)	Total (lb/yr)
30.37	1,116.16	1,146.53	**VOC**	100.00	6.07	223.23	229.31
			Benzene				
			Biphenyl				
			m-Cresol				
			o-Cresol				
			p-Cresol				
			Cumene				
			Dibenzofuran	26.238	1.59	58.57	60.17
			Ethylbenzene				
			Naphthalene				
			Phenol				
			Quinoline				
			Styrene				
			Toluene				
			m-Xylene				
			o-Xylene				
			p-Xylene				
			Acenaphthene	24.349	1.48	54.35	55.83
			Acenaphthylene				
			Anthracene	6.411	0.39	14.31	14.70
			Benzo(a)anthracene	2.100	0.13	4.69	4.81
			Benzo(b)fluoranthene	2.169	0.13	4.84	4.97
			Benzo(k)fluoranthene	0.142	0.01	0.32	0.33
			Benzo(g,h,i)perylene	0.116	0.01	0.26	0.27
			Benzo(a)pyrene	0.438	0.03	0.98	1.00
			Chrysene	0.592	0.04	1.32	1.36
			Dibenzo(a,h)anthracene	0.069	0.00	0.15	0.16
			Fluoranthene	20.644	1.25	46.08	47.34
			Fluorene	1.902	0.12	4.25	4.36
			Indeno(1,2,3-cd)pyrene	0.012	0.00	0.03	0.03
			Phenanthrene	7.372	0.45	16.46	16.90
			Pyrene	5.398	0.33	12.05	12.38

Table 5-6A. 2018 Potential Emissions Inventory, Coal Tar Pitch Storage Tanks
Koppers Inc., Follansbee Tar Plant, Follansbee, West Virginia
Note: Emissions were estimated using methodology outlined in AP-42, Section 7.1, Organic Liquid Storage Tanks,11/06

Tank ID	Contents	Control Device	% Control	Throughput (gal)	No. Days in Service	Temp °F	D (ft)	Hs (ft)	H_L (ft)	V (gal)	Turn overs	Heat (Y/N)	DP_B (psia)	a	I	T_{LA} (R)	Mv (lb/mol)	Pva (psia)	Taa (R)	Tax (R)	Tan (R)	DT_A (R)	Tsa (R)	Tsx (R)	Tsn (R)	DTs (R)	T_{LX} (R)	T_{LN} (R)	P_{LX} (psia)	P_{LN} (psia)	DP_V (psia)	Vv (ft³)	H_{VO} (ft)	T_B (R)	Wv lb/ft³	K_E	DT_c (R)	K_S	Turnover Factor
Tank 804	Coal Tar Pitch	Scrubber E	80	3,850,000	365	500	23.0	18.0	9.0	55,943	68.8	Y	0.89	1,203	959.44	177.52 at T_{LA}	0.0686 at T_{LA}	510.25	519.8	500.7	19.1	960	970	950	20	970	950	0.0809 at T_{LX}	0.0591 at T_{LN}	0.0218	3,839	9.24	959.00	0.0012	0.016	14.4	0.967	1.000

Uncontrolled VOC Emissions L_S (lb/yr)	L_W (lb/yr)	Total (lb/yr)		% wgt vapors at T_{LA}	Controlled VOC Emissions L_S (lb/yr)	L_W (lb/yr)	Total (lb/yr)
26.46	1,116.16	1,142.62	VOC	100.00	5.29	223.23	228.52
			Benzene				
			Biphenyl				
			m-Cresol				
			o-Cresol				
			p-Cresol				
			Cumene				
			Dibenzofuran	26.238	1.39	58.57	59.96
			Ethylbenzene				
			Naphthalene				
			Phenol				
			Quinoline				
			Styrene				
			Toluene				
			m-Xylene				
			o-Xylene				
			p-Xylene				
			Acenaphthene	24.349	1.29	54.35	55.64
			Acenaphthylene				
			Anthracene	6.411	0.34	14.31	14.65
			Benzo(a)anthracene	2.100	0.11	4.69	4.80
			Benzo(b)fluoranthene	2.169	0.11	4.84	4.96
			Benzo(k)fluoranthene	0.142	0.01	0.32	0.32
			Benzo(g,h,i)perylene	0.116	0.01	0.26	0.27
			Benzo(a)pyrene	0.438	0.02	0.98	1.00
			Chrysene	0.592	0.03	1.32	1.35
			Dibenzo(a,h)anthracene	0.069	0.00	0.15	0.16
			Fluoranthene	20.644	1.09	46.08	47.18
			Fluorene	1.902	0.10	4.25	4.35
			Indeno(1,2,3-cd)pyrene	0.012	0.00	0.03	0.03
			Phenanthrene	7.372	0.39	16.46	16.85
			Pyrene	5.398	0.29	12.05	12.34

Tank ID	Contents	Control Device	% Control	Throughput (gal)	No. Days in Service	Temp °F	D (ft)	Hs (ft)	H_L (ft)	V (gal)	Turn overs	Heat (Y/N)	DP_B (psia)	a	I	T_{LA} (R)	Mv (lb/mol)	Pva (psia)	Taa (R)	Tax (R)	Tan (R)	DT_A (R)	Tsa (R)	Tsx (R)	Tsn (R)	DTs (R)	T_{LX} (R)	T_{LN} (R)	P_{LX} (psia)	P_{LN} (psia)	DP_V (psia)	Vv (ft³)	H_{VO} (ft)	T_B (R)	Wv lb/ft³	K_E	DT_c (R)	K_S	Turnover Factor
Tank 805	Coal Tar Pitch	Scrubber E	80	3,850,000	365	500	18.0	18.0	9.0	34,264	112.4	Y	0.89	1,203	959.44	177.52 at T_{LA}	0.0686 at T_{LA}	510.25	519.8	500.7	19.1	960	970	950	20	970	950	0.0809 at T_{LX}	0.0591 at T_{LN}	0.0218	2,338	9.19	959.00	0.0012	0.016	14.4	0.968	1.000

Uncontrolled VOC Emissions L_S (lb/yr)	L_W (lb/yr)	Total (lb/yr)		% wgt vapors at T_{LA}	Controlled VOC Emissions L_S (lb/yr)	L_W (lb/yr)	Total (lb/yr)
16.12	1,116.16	1,132.28	VOC	100.00	3.22	223.23	226.46
			Benzene				
			Biphenyl				
			m-Cresol				
			o-Cresol				
			p-Cresol				
			Cumene				
			Dibenzofuran	26.238	0.85	58.57	59.42
			Ethylbenzene				
			Naphthalene				
			Phenol				
			Quinoline				
			Styrene				
			Toluene				
			m-Xylene				
			o-Xylene				
			p-Xylene				
			Acenaphthene	24.349	0.78	54.35	55.14
			Acenaphthylene				
			Anthracene	6.411	0.21	14.31	14.52
			Benzo(a)anthracene	2.100	0.07	4.69	4.75
			Benzo(b)fluoranthene	2.169	0.07	4.84	4.91
			Benzo(k)fluoranthene	0.142	0.00	0.32	0.32
			Benzo(g,h,i)perylene	0.116	0.00	0.26	0.26
			Benzo(a)pyrene	0.438	0.01	0.98	0.99
			Chrysene	0.592	0.02	1.32	1.34
			Dibenzo(a,h)anthracene	0.069	0.00	0.15	0.16
			Fluoranthene	20.644	0.67	46.08	46.75
			Fluorene	1.902	0.06	4.25	4.31
			Indeno(1,2,3-cd)pyrene	0.012	0.00	0.03	0.03
			Phenanthrene	7.372	0.24	16.46	16.69
			Pyrene	5.398	0.17	12.05	12.22

Table 5-6A. 2018 Potential Emissions Inventory, Coal Tar Pitch Storage Tanks
Koppers Inc., Follansbee Tar Plant, Follansbee, West Virginia
Note: Emissions were estimated using methodology outlined in AP-42, Section 7.1, Organic Liquid Storage Tanks, 11/06

Tank ID	Contents	Control Device	% Control	Throughput (gal)	No. Days in Service	Temp °F	D (ft)	Hs (ft)	H_L (ft)	V (gal)	Turn overs	Heat (Y/N)	DP_B (psia)	a	I	T_{LA} (R)	Mv (lb/mol)	Pva (psia)	Taa (R)	Tax (R)	Tan (R)	DT_A (R)	Tsa (R)	Tsx (R)	Tsn (R)	DTs (R)	T_{LX} (R)	T_{LN} (R)	P_{LX} (psia)	P_{LN} (psia)	DP_V (psia)	Vv (ft³)	H_{VO} (ft)	T_B (R)	Wv lb/ft³	K_E	DT_v (R)	K_S	Turnover Factor
Tank 806	Coal Tar Pitch	Scrubber E	80	3,850,000	365	500	23.0	21.0	10.5	65,267	59.0	Y		0.89	1,203	959.44	177.52 at T_{LA}	0.0686 at T_{LA}	510.25	519.8	500.7	19.1	960	970	950	20	970	950	0.0809 at T_{LX}	0.0591 at T_{LN}	0.0218	4,462	10.74	959.00	0.0012	0.016	14.4	0.962	1.000

Uncontrolled VOC Emissions L_S (lb/yr)	L_W (lb/yr)	Total (lb/yr)		% wgt vapors at T_{LA}	Controlled VOC Emissions L_S (lb/yr)	L_W (lb/yr)	Total (lb/yr)
30.59	1,116.16	1,146.75	VOC	100.00	6.12	223.23	229.35
			Benzene				
			Biphenyl				
			m-Cresol				
			o-Cresol				
			p-Cresol				
			Cumene				
			Dibenzofuran	26.238	1.61	58.57	60.18
			Ethylbenzene				
			Naphthalene				
			Phenol				
			Quinoline				
			Styrene				
			Toluene				
			m-Xylene				
			o-Xylene				
			p-Xylene				
			Acenaphthene	24.349	1.49	54.35	55.84
			Acenaphthylene				
			Anthracene	6.411	0.39	14.31	14.70
			Benzo(a)anthracene	2.100	0.13	4.69	4.82
			Benzo(b)fluoranthene	2.169	0.13	4.84	4.97
			Benzo(k)fluoranthene	0.142	0.01	0.32	0.33
			Benzo(g,h,i)perylene	0.116	0.01	0.26	0.27
			Benzo(a)pyrene	0.438	0.03	0.98	1.00
			Chrysene	0.592	0.04	1.32	1.36
			Dibenzo(a,h)anthracene	0.069	0.00	0.15	0.16
			Fluoranthene	20.644	1.26	46.08	47.35
			Fluorene	1.902	0.12	4.25	4.36
			Indeno(1,2,3-cd)pyrene	0.012	0.00	0.03	0.03
			Phenanthrene	7.372	0.45	16.46	16.91
			Pyrene	5.398	0.33	12.05	12.38

Tank ID	Contents	Control Device	% Control	Throughput (gal)	No. Days in Service	Temp °F	D (ft)	Hs (ft)	H_L (ft)	V (gal)	Turn overs	Heat (Y/N)	DP_B (psia)	a	I	T_{LA} (R)	Mv (lb/mol)	Pva (psia)	Taa (R)	Tax (R)	Tan (R)	DT_A (R)	Tsa (R)	Tsx (R)	Tsn (R)	DTs (R)	T_{LX} (R)	T_{LN} (R)	P_{LX} (psia)	P_{LN} (psia)	DP_V (psia)	Vv (ft³)	H_{VO} (ft)	T_B (R)	Wv lb/ft³	K_E	DT_v (R)	K_S	Turnover Factor
Tank 808	Coal Tar Pitch	Scrubber E	80	3,850,000	365	500	23.0	21.0	10.5	65,267	59.0	Y		0.89	1,203	959.44	177.52 at T_{LA}	0.0686 at T_{LA}	510.25	519.8	500.7	19.1	960	970	950	20	970	950	0.0809 at T_{LX}	0.0591 at T_{LN}	0.0218	4,462	10.74	959.00	0.0012	0.016	14.4	0.962	1.000

Uncontrolled VOC Emissions L_S (lb/yr)	L_W (lb/yr)	Total (lb/yr)		% wgt vapors at T_{LA}	Controlled VOC Emissions L_S (lb/yr)	L_W (lb/yr)	Total (lb/yr)
30.59	1,116.16	1,146.75	VOC	100.00	6.12	223.23	229.35
			Benzene				
			Biphenyl				
			m-Cresol				
			o-Cresol				
			p-Cresol				
			Cumene				
			Dibenzofuran	26.238	1.61	58.57	60.18
			Ethylbenzene				
			Naphthalene				
			Phenol				
			Quinoline				
			Styrene				
			Toluene				
			m-Xylene				
			o-Xylene				
			p-Xylene				
			Acenaphthene	24.349	1.49	54.35	55.84
			Acenaphthylene				
			Anthracene	6.411	0.39	14.31	14.70
			Benzo(a)anthracene	2.100	0.13	4.69	4.82
			Benzo(b)fluoranthene	2.169	0.13	4.84	4.97
			Benzo(k)fluoranthene	0.142	0.01	0.32	0.33
			Benzo(g,h,i)perylene	0.116	0.01	0.26	0.27
			Benzo(a)pyrene	0.438	0.03	0.98	1.00
			Chrysene	0.592	0.04	1.32	1.36
			Dibenzo(a,h)anthracene	0.069	0.00	0.15	0.16
			Fluoranthene	20.644	1.26	46.08	47.35
			Fluorene	1.902	0.12	4.25	4.36
			Indeno(1,2,3-cd)pyrene	0.012	0.00	0.03	0.03
			Phenanthrene	7.372	0.45	16.46	16.91
			Pyrene	5.398	0.33	12.05	12.38

Table 5-6B. 2018 Potential Emissions Inventory, Type A Pitch Storage Tanks, Coal Tar Pitch Addition
Koppers Inc., Follansbee Tar Plant, Follansbee, West Virginia
Note: Emissions were estimated using methodology outlined in AP-42, Section 7.1, Organic Liquid Storage Tanks, 11/06

Tank ID	Contents	Control Device	% Control	Throughput (gal)	No. Days in Service	Temp [a]	D (ft)	Hs (ft)	H_L (ft)	V (gal)	Turn overs	Heat (Y/N)	DP_B (psia)	a	b	T_{LA} (R)	Mv (lb/mol)	Pva (psia)	Taa (R)	Tax (R)	Tan (R)	DT_A (R)	Tsa (R)	Tsx (R)	Tsn (R)	DTs (R)	T_{LX} (R)	T_{LN} (R)	P_{TX} (psia)	P_{TN} (psia)	DP_V (psia)	Vv (ft^3)	H_{VO} (ft)	T_B (R)	Wv lb/ft^3	K_E	DT_v (R)	K_S	Turnover Factor
Tank 801	Coal Tar Pitch	Scrubber E	80	3,850,000	365	500	26.0	16.0	8.0	63,546	60.6	Y		0.89	1,203	959.44	177.52 at T_{LA}	0.0686 at T_{LA}	510.25	519.8	500.7	19.1	960	970	950	20	970	950	0.0809 at T_{LX}	0.0591 at T_{LN}	0.0218	4.391	8.27	959.00	0.0012	0.016	14.4	0.971	1.000

Uncontrolled VOC Emissions L_S (lb/yr)	L_W (lb/yr)	Total (lb/yr)		% wgt vapors at T_{LA}	Controlled VOC Emissions L_S (lb/yr)	L_W (lb/yr)	Total (lb/yr)
30.37	1.116.16	1,146.53	**VOC**	100.00	6.07	223.23	229.31
			Benzene				
			Biphenyl				
			m-Cresol				
			o-Cresol				
			p-Cresol				
			Cumene				
			Dibenzofuran	26.238	1.59	58.57	60.17
			Ethylbenzene				
			Naphthalene				
			Phenol				
			Quinoline				
			Styrene				
			Toluene				
			m-Xylene				
			o-Xylene				
			p-Xylene				
			Acenaphthene	24.349	1.48	54.35	55.83
			Acenaphthylene				
			Anthracene	6.411	0.39	14.31	14.70
			Benzo(a)anthracene	2.100	0.13	4.69	4.81
			Benzo(b)fluoranthene	2.169	0.13	4.84	4.97
			Benzo(k)fluoranthene	0.142	0.01	0.32	0.33
			Benzo(g,h,i)perylene	0.116	0.01	0.26	0.27
			Benzo(a)pyrene	0.438	0.03	0.98	1.00
			Chrysene	0.592	0.04	1.32	1.36
			Dibenzo(a,h)anthracene	0.069	0.00	0.15	0.16
			Fluoranthene	20.644	1.25	46.08	47.34
			Fluorene	1.902	0.12	4.25	4.36
			Indeno(1,2,3-cd)pyrene	0.012	0.00	0.03	0.03
			Phenanthrene	7.372	0.45	16.46	16.90
			Pyrene	5.398	0.33	12.05	12.38

Tank ID	Contents	Control Device	% Control	Throughput (gal)	No. Days in Service	Temp [a]	D (ft)	Hs (ft)	H_L (ft)	V (gal)	Turn overs	Heat (Y/N)	DP_B (psia)	a	b	T_{LA} (R)	Mv (lb/mol)	Pva (psia)	Taa (R)	Tax (R)	Tan (R)	DT_A (R)	Tsa (R)	Tsx (R)	Tsn (R)	DTs (R)	T_{LX} (R)	T_{LN} (R)	P_{TX} (psia)	P_{TN} (psia)	DP_V (psia)	Vv (ft^3)	H_{VO} (ft)	T_B (R)	Wv lb/ft^3	K_E	DT_v (R)	K_S	Turnover Factor
Tank 802	Coal Tar Pitch	Scrubber E	80	3,850,000	365	500	26.0	16.0	8.0	63,546	60.6	Y		0.89	1,203	959.44	177.52 at T_{LA}	0.0686 at T_{LA}	510.25	519.8	500.7	19.1	960	970	950	20	970	950	0.0809 at T_{LX}	0.0591 at T_{LN}	0.0218	4.391	8.27	959.00	0.0012	0.016	14.4	0.971	1.000

Uncontrolled VOC Emissions L_S (lb/yr)	L_W (lb/yr)	Total (lb/yr)		% wgt vapors at T_{LA}	Controlled VOC Emissions L_S (lb/yr)	L_W (lb/yr)	Total (lb/yr)
30.37	1.116.16	1,146.53	**VOC**	100.00	6.07	223.23	229.31
			Benzene				
			Biphenyl				
			m-Cresol				
			o-Cresol				
			p-Cresol				
			Cumene				
			Dibenzofuran	26.238	1.59	58.57	60.17
			Ethylbenzene				
			Naphthalene				
			Phenol				
			Quinoline				
			Styrene				
			Toluene				
			m-Xylene				
			o-Xylene				
			p-Xylene				
			Acenaphthene	24.349	1.48	54.35	55.83
			Acenaphthylene				
			Anthracene	6.411	0.39	14.31	14.70
			Benzo(a)anthracene	2.100	0.13	4.69	4.81
			Benzo(b)fluoranthene	2.169	0.13	4.84	4.97
			Benzo(k)fluoranthene	0.142	0.01	0.32	0.33
			Benzo(g,h,i)perylene	0.116	0.01	0.26	0.27
			Benzo(a)pyrene	0.438	0.03	0.98	1.00
			Chrysene	0.592	0.04	1.32	1.36
			Dibenzo(a,h)anthracene	0.069	0.00	0.15	0.16
			Fluoranthene	20.644	1.25	46.08	47.34
			Fluorene	1.902	0.12	4.25	4.36
			Indeno(1,2,3-cd)pyrene	0.012	0.00	0.03	0.03
			Phenanthrene	7.372	0.45	16.46	16.90
			Pyrene	5.398	0.33	12.05	12.38

Table 5-6B. 2018 Potential Emissions Inventory, Type A Pitch Storage Tanks, Coal Tar Pitch Addition
Koppers Inc., Follansbee Tar Plant, Follansbee, West Virginia
Note: Emissions were estimated using methodology outlined in AP-42, Section 7.1, Organic Liquid Storage Tanks, 11/06

Tank ID	Contents	Control Device	% Control	Throughput (gal)	No. Days in Service	Temp °F	D (ft)	Hs (ft)	H_L (ft)	V (gal)	Turn overs	Heat (Y/N)	DP_B (psia)	a	I	T_{LA} (R)	Mv (lb/mol)	Pva (psia)	Taa (R)	Tax (R)	Tan (R)	DT_A (R)	Tsa (R)	Tsx (R)	Tsn (R)	DTs (R)	T_{LX} (R)	T_{LN} (R)	P_{TX} (psia)	P_{TN} (psia)	DP_V (psia)	Vv (ft³)	H_{VO} (ft)	T_B (R)	Wv lb/ft³	K_E	DT_v (R)	K_S	Turnover Factor
Tank 804	Coal Tar Pitch	Scrubber E	80	3,850,000	365	500	23.0	18.0	9.0	55.943	68.8	Y	6.89	1,203		959.44	177.52 at T_{LA}	0.0686 at T_{LA}	510.25	519.8	500.7	19.1	960	970	950	20	970	950	0.0809 at T_{LX}	0.0591 at T_{LN}	0.0218	3,839	9.24	959.00	0.0012	0.016	14.4	0.967	1.000

Uncontrolled VOC Emissions L_S (lb/yr)	L_W (lb/yr)	Total (lb/yr)		% wgt vapors at T_{LA}	Controlled VOC Emissions L_S (lb/yr)	L_W (lb/yr)	Total (lb/yr)
26.46	1,116.16	1,142.62	**VOC**	100.00	5.29	223.23	228.52
			Benzene				
			Biphenyl				
			m-Cresol				
			o-Cresol				
			p-Cresol				
			Cumene				
			Dibenzofuran	26.238	1.39	58.57	59.96
			Ethylbenzene				
			Naphthalene				
			Phenol				
			Quinoline				
			Styrene				
			Toluene				
			m-Xylene				
			o-Xylene				
			p-Xylene				
			Acenaphthene	24.349	1.29	54.35	55.64
			Acenaphthylene				
			Anthracene	6.411	0.34	14.31	14.65
			Benzo(a)anthracene	2.100	0.11	4.69	4.80
			Benzo(b)fluoranthene	2.169	0.11	4.84	4.96
			Benzo(k)fluoranthene	0.142	0.01	0.32	0.32
			Benzo(g,h,i)perylene	0.116	0.01	0.26	0.27
			Benzo(a)pyrene	0.438	0.02	0.98	1.00
			Chrysene	0.592	0.03	1.32	1.35
			Dibenzo(a,h)anthracene	0.069	0.00	0.15	0.16
			Fluoranthene	20.644	1.09	46.08	47.18
			Fluorene	1.902	0.10	4.25	4.35
			Indeno(1,2,3-cd)pyrene	0.012	0.00	0.03	0.03
			Phenanthrene	7.372	0.39	16.46	16.85
			Pyrene	5.398	0.29	12.05	12.34

Tank ID	Contents	Control Device	% Control	Throughput (gal)	No. Days in Service	Temp °F	D (ft)	Hs (ft)	H_L (ft)	V (gal)	Turn overs	Heat (Y/N)	DP_B (psia)	a	I	T_{LA} (R)	Mv (lb/mol)	Pva (psia)	Taa (R)	Tax (R)	Tan (R)	DT_A (R)	Tsa (R)	Tsx (R)	Tsn (R)	DTs (R)	T_{LX} (R)	T_{LN} (R)	P_{TX} (psia)	P_{TN} (psia)	DP_V (psia)	Vv (ft³)	H_{VO} (ft)	T_B (R)	Wv lb/ft³	K_E	DT_v (R)	K_S	Turnover Factor
Tank 805	Coal Tar Pitch	Scrubber E	80	3,850,000	365	500	18.0	18.0	9.0	34.264	112.4	Y	6.89	1,203		959.44	177.52 at T_{LA}	0.0686 at T_{LA}	510.25	519.8	500.7	19.1	960	970	950	20	970	950	0.0809 at T_{LX}	0.0591 at T_{LN}	0.0218	2,338	9.19	959.00	0.0012	0.016	14.4	0.968	1.000

Uncontrolled VOC Emissions L_S (lb/yr)	L_W (lb/yr)	Total (lb/yr)		% wgt vapors at T_{LA}	Controlled VOC Emissions L_S (lb/yr)	L_W (lb/yr)	Total (lb/yr)
16.12	1,116.16	1,132.28	**VOC**	100.00	3.22	223.23	226.46
			Benzene				
			Biphenyl				
			m-Cresol				
			o-Cresol				
			p-Cresol				
			Cumene				
			Dibenzofuran	26.238	0.85	58.57	59.42
			Ethylbenzene				
			Naphthalene				
			Phenol				
			Quinoline				
			Styrene				
			Toluene				
			m-Xylene				
			o-Xylene				
			p-Xylene				
			Acenaphthene	24.349	0.78	54.35	55.14
			Acenaphthylene				
			Anthracene	6.411	0.21	14.31	14.52
			Benzo(a)anthracene	2.100	0.07	4.69	4.75
			Benzo(b)fluoranthene	2.169	0.07	4.84	4.91
			Benzo(k)fluoranthene	0.142	0.00	0.32	0.32
			Benzo(g,h,i)perylene	0.116	0.00	0.26	0.26
			Benzo(a)pyrene	0.438	0.01	0.98	0.99
			Chrysene	0.592	0.02	1.32	1.34
			Dibenzo(a,h)anthracene	0.069	0.00	0.15	0.16
			Fluoranthene	20.644	0.67	46.08	46.75
			Fluorene	1.902	0.06	4.25	4.31
			Indeno(1,2,3-cd)pyrene	0.012	0.00	0.03	0.03
			Phenanthrene	7.372	0.24	16.46	16.69
			Pyrene	5.398	0.17	12.05	12.22

Table 5-6B. 2018 Potential Emissions Inventory, Type A Pitch Storage Tanks, Coal Tar Pitch Addition
Koppers Inc., Follansbee Tar Plant, Follansbee, West Virginia
Note: Emissions were estimated using methodology outlined in AP-42, Section 7.1, Organic Liquid Storage Tanks, 11/06

Tank ID	Contents	Control Device	% Control	Throughput (gal)	No. Days in Service	Temp °F	D (ft)	Hs (ft)	H_L (ft)	V (gal)	Turn overs	Heat (Y/N)	DP_B (psia)	a	b	T_{LA} (R)	Mv (lb/mol)	Pva (psia)	Taa (R)	Tax (R)	Tan (R)	DT_A (R)	Tsa (R)	Tsx (R)	Tsn (R)	DTs (R)	T_{LX} (R)	T_{LN} (R)	P_{LX} (psia)	P_{LN} (psia)	DP_V (psia)	Vv (ft³)	H_{VO} (ft)	T_R (R)	Wv lb/ft³	K_E	DT_v (R)	K_S	Turnover Factor
Tank 806	Coal Tar Pitch	Scrubber E	80	3,850,000	365	500	23.0	21.0	10.5	65,267	59.0	Y		0.89	1,203	959.44	177.52 at T_{LA}	0.0686 at T_{LA}	510.25	519.8	500.7	19.1	960	970	950	20	970	950	0.0809 at T_{LX}	0.0591 at T_{LN}	0.0218	4.462	10.74	959.00	0.0012	0.016	14.4	0.962	1.000

Uncontrolled VOC Emissions L_S (lb/yr)	L_W (lb/yr)	Total (lb/yr)		% wgt vapors at T_{LA}	Controlled VOC Emissions L_S (lb/yr)	L_W (lb/yr)	Total (lb/yr)
30.59	1,116.16	1,146.75	**VOC**	100.00	6.12	223.23	229.35
			Benzene				
			Biphenyl				
			m-Cresol				
			o-Cresol				
			p-Cresol				
			Cumene				
			Dibenzofuran	26.238	1.61	58.57	60.18
			Ethylbenzene				
			Naphthalene				
			Phenol				
			Quinoline				
			Styrene				
			Toluene				
			m-Xylene				
			o-Xylene				
			p-Xylene				
			Acenaphthene	24.349	1.49	54.35	55.84
			Acenaphthylene				
			Anthracene	6.411	0.39	14.31	14.70
			Benzo(a)anthracene	2.100	0.13	4.69	4.82
			Benzo(b)fluoranthene	2.169	0.13	4.84	4.97
			Benzo(k)fluoranthene	0.142	0.01	0.32	0.33
			Benzo(g,h,i)perylene	0.116	0.01	0.26	0.27
			Benzo(a)pyrene	0.438	0.03	0.98	1.00
			Chrysene	0.592	0.04	1.32	1.36
			Dibenzo(a,h)anthracene	0.069	0.00	0.15	0.16
			Fluoranthene	20.644	1.26	46.08	47.35
			Fluorene	1.902	0.12	4.25	4.36
			Indeno(1,2,3-cd)pyrene	0.012	0.00	0.03	0.03
			Phenanthrene	7.372	0.45	16.46	16.91
			Pyrene	5.398	0.33	12.05	12.38

Tank ID	Contents	Control Device	% Control	Throughput (gal)	No. Days in Service	Temp °F	D (ft)	Hs (ft)	H_L (ft)	V (gal)	Turn overs	Heat (Y/N)	DP_B (psia)	a	b	T_{LA} (R)	Mv (lb/mol)	Pva (psia)	Taa (R)	Tax (R)	Tan (R)	DT_A (R)	Tsa (R)	Tsx (R)	Tsn (R)	DTs (R)	T_{LX} (R)	T_{LN} (R)	P_{LX} (psia)	P_{LN} (psia)	DP_V (psia)	Vv (ft³)	H_{VO} (ft)	T_R (R)	Wv lb/ft³	K_E	DT_v (R)	K_S	Turnover Factor
Tank 808	Coal Tar Pitch	Scrubber E	80	3,850,000	365	500	23.0	21.0	10.5	65,267	59.0	Y		0.89	1,203	959.44	177.52 at T_{LA}	0.0686 at T_{LA}	510.25	519.8	500.7	19.1	960	970	950	20	970	950	0.0809 at T_{LX}	0.0591 at T_{LN}	0.0218	4.462	10.74	959.00	0.0012	0.016	14.4	0.962	1.000

Uncontrolled VOC Emissions L_S (lb/yr)	L_W (lb/yr)	Total (lb/yr)		% wgt vapors at T_{LA}	Controlled VOC Emissions L_S (lb/yr)	L_W (lb/yr)	Total (lb/yr)
30.59	1,116.16	1,146.75	**VOC**	100.00	6.12	223.23	229.35
			Benzene				
			Biphenyl				
			m-Cresol				
			o-Cresol				
			p-Cresol				
			Cumene				
			Dibenzofuran	26.238	1.61	58.57	60.18
			Ethylbenzene				
			Naphthalene				
			Phenol				
			Quinoline				
			Styrene				
			Toluene				
			m-Xylene				
			o-Xylene				
			p-Xylene				
			Acenaphthene	24.349	1.49	54.35	55.84
			Acenaphthylene				
			Anthracene	6.411	0.39	14.31	14.70
			Benzo(a)anthracene	2.100	0.13	4.69	4.82
			Benzo(b)fluoranthene	2.169	0.13	4.84	4.97
			Benzo(k)fluoranthene	0.142	0.01	0.32	0.33
			Benzo(g,h,i)perylene	0.116	0.01	0.26	0.27
			Benzo(a)pyrene	0.438	0.03	0.98	1.00
			Chrysene	0.592	0.04	1.32	1.36
			Dibenzo(a,h)anthracene	0.069	0.00	0.15	0.16
			Fluoranthene	20.644	1.26	46.08	47.35
			Fluorene	1.902	0.12	4.25	4.36
			Indeno(1,2,3-cd)pyrene	0.012	0.00	0.03	0.03
			Phenanthrene	7.372	0.45	16.46	16.91
			Pyrene	5.398	0.33	12.05	12.38

Table 5-6C. 2018 Potential Emissions Inventory, Type A Pitch Storage Tanks, Petro Pitch Addition
Koppers Inc., Follansbee Tar Plant, Follansbee, West Virginia
Note: Emissions were estimated using methodology outlined in AP-42, Section 7.1, Organic Liquid Storage Tanks, 11/06

Tank ID	Contents	Control Device	% Control	Throughput (gal)	No. Days in Service	Temp °F	D (ft)	Hs (ft)	H_L (ft)	V (gal)	Turn overs	Heat (Y/N)	DP_B (psia)	a	J	T_{LA} (R)	Mv (lb/mol)	Pva (psia)	Taa (R)	Tax (R)	Tan (R)	DT_A (R)	Tsa (R)	Tsx (R)	Tsn (R)	DTs (R)	T_{LX} (R)	T_{LN} (R)	P_{LX} (psia)	P_{LN} (psia)	DP_V (psia)	Vv (ft³)	H_{VO} (ft)	T_B (R)	Wv lb/ft³	K_E	DT_V (R)	K_S	Turnover Factor
Tank 801	Petro Pitch	Scrubber E	80	2,566,667	365	500	26.0	16.0	8.0	63.546	40.4	Y		0.89	1.203	959.44	162.94 at T_{LA}	0.1381 at T_{LA}	510.25	519.8	500.7	19.1	960	970	950	20	970	950	0.1603 at T_{LX}	0.1206 at T_{LN}	0.0397	4,391	8.27	959.00	0.0022	0.018	14.4	0.943	1.000

Uncontrolled VOC Emissions L_S (lb/yr)	L_W (lb/yr)	Total (lb/yr)		% wgt vapors at T_{LA}	Controlled VOC Emissions L_S (lb/yr)	L_W (lb/yr)	Total (lb/yr)
58.60	1,375.03	1,433.63	VOC	100.00	11.72	275.01	286.73
			Benzene				
			Biphenyl				
			m-Cresol				
			o-Cresol				
			p-Cresol				
			Cumene				
			Dibenzofuran				
			Ethylbenzene				
			Naphthalene				
			Phenol				
			Quinoline				
			Styrene				
			Toluene				
			m-Xylene				
			o-Xylene				
			p-Xylene				
			Acenaphthene	55.590	6.51	152.88	159.39
			Acenaphthylene				
			Anthracene	4.635	0.54	12.75	13.29
			Benzo(a)anthracene	0.268	0.03	0.74	0.77
			Benzo(b)fluoranthene	0.025	0.00	0.07	0.07
			Benzo(k)fluoranthene	0.003	0.00	0.01	0.01
			Benzo(g,h,i)perylene				
			Benzo(a)pyrene	0.028	0.00	0.08	0.08
			Chrysene	0.095	0.01	0.26	0.27
			Dibenzo(a,h)anthracene				
			Fluoranthene	3.344	0.39	9.20	9.59
			Fluorene	20.623	2.42	56.72	59.13
			Indeno(1,2,3-cd)pyrene				
			Phenanthrene	13.223	1.55	36.37	37.91
			Pyrene	2.115	0.25	5.82	6.07

Tank ID	Contents	Control Device	% Control	Throughput (gal)	No. Days in Service	Temp °F	D (ft)	Hs (ft)	H_L (ft)	V (gal)	Turn overs	Heat (Y/N)	DP_B (psia)	a	J	T_{LA} (R)	Mv (lb/mol)	Pva (psia)	Taa (R)	Tax (R)	Tan (R)	DT_A (R)	Tsa (R)	Tsx (R)	Tsn (R)	DTs (R)	T_{LX} (R)	T_{LN} (R)	P_{LX} (psia)	P_{LN} (psia)	DP_V (psia)	Vv (ft³)	H_{VO} (ft)	T_B (R)	Wv lb/ft³	K_E	DT_V (R)	K_S	Turnover Factor
Tank 802	Petro Pitch	Scrubber E	80	2,566,667	365	500	26.0	16.0	8.0	63.546	40.4	Y		0.89	1.203	959.44	162.94 at T_{LA}	0.1381 at T_{LA}	510.25	519.8	500.7	19.1	960	970	950	20	970	950	0.1603 at T_{LX}	0.1206 at T_{LN}	0.0397	4,391	8.27	959.00	0.0022	0.018	14.4	0.943	1.000

Uncontrolled VOC Emissions L_S (lb/yr)	L_W (lb/yr)	Total (lb/yr)		% wgt vapors at T_{LA}	Controlled VOC Emissions L_S (lb/yr)	L_W (lb/yr)	Total (lb/yr)
58.60	1,375.03	1,433.63	VOC	100.00	11.72	275.01	286.73
			Benzene				
			Biphenyl				
			m-Cresol				
			o-Cresol				
			p-Cresol				
			Cumene				
			Dibenzofuran				
			Ethylbenzene				
			Naphthalene				
			Phenol				
			Quinoline				
			Styrene				
			Toluene				
			m-Xylene				
			o-Xylene				
			p-Xylene				
			Acenaphthene	55.590	6.51	152.88	159.39
			Acenaphthylene				
			Anthracene	4.635	0.54	12.75	13.29
			Benzo(a)anthracene	0.268	0.03	0.74	0.77
			Benzo(b)fluoranthene	0.025	0.00	0.07	0.07
			Benzo(k)fluoranthene	0.003	0.00	0.01	0.01
			Benzo(g,h,i)perylene				
			Benzo(a)pyrene	0.028	0.00	0.08	0.08
			Chrysene	0.095	0.01	0.26	0.27
			Dibenzo(a,h)anthracene				
			Fluoranthene	3.344	0.39	9.20	9.59
			Fluorene	20.623	2.42	56.72	59.13
			Indeno(1,2,3-cd)pyrene				
			Phenanthrene	13.223	1.55	36.37	37.91
			Pyrene	2.115	0.25	5.82	6.07

Table 5-6C. 2018 Potential Emissions Inventory, Type A Pitch Storage Tanks, Petro Pitch Addition
Koppers Inc., Follansbee Tar Plant, Follansbee, West Virginia

Note: Emissions were estimated using methodology outlined in AP-42, Section 7.1, Organic Liquid Storage Tanks, 11/06

Tank ID	Contents	Control Device	% Control	Throughput (gal)	No. Days in Service	Temp °F	D (ft)	Hs (ft)	HL (ft)	V (gal)	Turn overs	Heat (Y/N)	DP_B (psia)	a	b	T_{LA} (R)	Mv (lb/mol)	Pva (psia)	Taa (R)	Tax (R)	Tan (R)	DT_A (R)	Tsa (R)	Tsx (R)	Tsn (R)	DTs (R)	T_{LX} (R)	T_{LN} (R)	P_{LX} (psia)	P_{LN} (psia)	DP_V (psia)	Vv (ft³)	H_{VO} (ft)	T_B (R)	Wv lb/ft³	K_E	DT_v (R)	K_S	Turnover Factor
Tank 804	Petro Pitch	Scrubber E	80	2,566,667	365	500	23.0	18.0	9.0	55,943	45.9	Y		0.89	1,203	959.44	162.94 at T_{LA}	0.1381 at T_{LA}	510.25	519.8	500.7	19.1	960	970	950	20	970	950	0.1603 at T_{LX}	0.1206 at T_{LN}	0.0397	3,839	9.24	959.00	0.0002	0.018	14.4	0.937	1.000

Uncontrolled VOC Emissions L_S (lb/yr)	L_W (lb/yr)	Total (lb/yr)		% wgt vapors at T_{LA}	Controlled VOC Emissions L_S (lb/yr)	L_W (lb/yr)	Total (lb/yr)
50.89	1,375.03	1,425.91	**VOC**	100.00	10.18	275.01	285.18
			Benzene				
			Biphenyl				
			m-Cresol				
			o-Cresol				
			p-Cresol				
			Cumene				
			Dibenzofuran				
			Ethylbenzene				
			Naphthalene				
			Phenol				
			Quinoline				
			Styrene				
			Toluene				
			m-Xylene				
			o-Xylene				
			p-Xylene				
			Acenaphthene	55.590	5.66	152.88	158.53
			Acenaphthylene				
			Anthracene	4.635	0.47	12.75	13.22
			Benzo(a)anthracene	0.268	0.03	0.74	0.77
			Benzo(b)fluoranthene	0.025	0.00	0.07	0.07
			Benzo(k)fluoranthene	0.003	0.00	0.01	0.01
			Benzo(g,h,i)perylene				
			Benzo(a)pyrene	0.028	0.00	0.08	0.08
			Chrysene	0.095	0.01	0.26	0.27
			Dibenzo(a,h)anthracene				
			Fluoranthene	3.344	0.34	9.20	9.54
			Fluorene	20.623	2.10	56.72	58.81
			Indeno(1,2,3-cd)pyrene				
			Phenanthrene	13.223	1.35	36.37	37.71
			Pyrene	2.115	0.22	5.82	6.03

Tank	Contents	Control Device	% Control	Throughput (gal)	No. Days in Service	Temp °F	D (ft)	Hs (ft)	HL (ft)	V (gal)	Turn overs	Heat (Y/N)	DP_B (psia)	a	b	T_{LA} (R)	Mv (lb/mol)	Pva (psia)	Taa (R)	Tax (R)	Tan (R)	DT_A (R)	Tsa (R)	Tsx (R)	Tsn (R)	DTs (R)	T_{LX} (R)	T_{LN} (R)	P_{LX} (psia)	P_{LN} (psia)	DP_V (psia)	Vv (ft³)	H_{VO} (ft)	T_B (R)	Wv lb/ft³	K_E	DT_v (R)	K_S	Turnover Factor
Tank 805	Petro Pitch	Scrubber E	80	2,566,667	365	500	18.0	18.0	9.0	34,264	74.9	Y		0.89	1,203	959.44	162.94 at T_{LA}	0.1381 at T_{LA}	510.25	519.8	500.7	19.1	960	970	950	20	970	950	0.1603 at T_{LX}	0.1206 at T_{LN}	0.0397	2,338	9.19	959.00	0.0002	0.018	14.4	0.937	1.000

Uncontrolled VOC Emissions L_S (lb/yr)	L_W (lb/yr)	Total (lb/yr)		% wgt vapors at T_{LA}	Controlled VOC Emissions L_S (lb/yr)	L_W (lb/yr)	Total (lb/yr)
31.00	1,375.03	1,406.03	**VOC**	100.00	6.20	275.01	281.21
			Benzene				
			Biphenyl				
			m-Cresol				
			o-Cresol				
			p-Cresol				
			Cumene				
			Dibenzofuran				
			Ethylbenzene				
			Naphthalene				
			Phenol				
			Quinoline				
			Styrene				
			Toluene				
			m-Xylene				
			o-Xylene				
			p-Xylene				
			Acenaphthene	55.590	3.45	152.88	156.32
			Acenaphthylene				
			Anthracene	4.635	0.29	12.75	13.03
			Benzo(a)anthracene	0.268	0.02	0.74	0.75
			Benzo(b)fluoranthene	0.025	0.00	0.07	0.07
			Benzo(k)fluoranthene	0.003	0.00	0.01	0.01
			Benzo(g,h,i)perylene				
			Benzo(a)pyrene	0.028	0.00	0.08	0.08
			Chrysene	0.095	0.01	0.26	0.27
			Dibenzo(a,h)anthracene				
			Fluoranthene	3.344	0.21	9.20	9.40
			Fluorene	20.623	1.28	56.72	57.99
			Indeno(1,2,3-cd)pyrene				
			Phenanthrene	13.223	0.82	36.37	37.19
			Pyrene	2.115	0.13	5.82	5.95

Table 5-6C.

2018 Potential Emissions Inventory, Type A Pitch Storage Tanks, Petro Pitch Addition
Koppers Inc., Follansbee Tar Plant, Follansbee, West Virginia

Note: Emissions were estimated using methodology outlined in AP-42, Section 7.1, Organic Liquid Storage Tanks, 11/06

Tank ID	Contents	Control Device	% Control	Throughput (gal)	No. Days in Service	Temp °F	D (ft)	Hs (ft)	H_L (ft)	V (gal)	Turn overs	Heat (Y/N)	DP_B (psia)	a	I	T_{LA} (R)	Mv (lb/mol)	Pva (psia)	Taa (R)	Tax (R)	Tan (R)	DT_A (R)	Tsa (R)	Tsx (R)	Tsn (R)	DTs (R)	T_{LX} (R)	T_{LN} (R)	P_{LX} (psia)	P_{LN} (psia)	DP_V (psia)	Vv (ft³)	H_{VO} (ft)	T_B (R)	Wv lb/ft³	K_E	DT_v (R)	K_S	Turnover Factor
Tank 806	Petro Pitch	Scrubber E	80	2,566,667	365	500	23.0	21.0	10.5	65,267	39.3	Y		0.89	1.203	959.44	162.94 at T_{LA}	0.1381 at T_{LA}	510.25	519.8	500.7	19.1	960	970	950	20	970	950	0.1603 at T_{LX}	0.1206 at T_{LN}	0.0397	4,462	10.74	959.00	0.0022	0.018	14.4	0.927	1.000

Uncontrolled VOC Emissions L_S (lb/yr)	L_W (lb/yr)	Total (lb/yr)		% wgt vapors at T_{LA}	Controlled VOC Emissions L_S (lb/yr)	L_W (lb/yr)	Total (lb/yr)
58.54	1,375.03	1,433.57	**VOC**	100.00	11.71	275.01	286.71
			Benzene				
			Biphenyl				
			m-Cresol				
			o-Cresol				
			p-Cresol				
			Cumene				
			Dibenzofuran				
			Ethylbenzene				
			Naphthalene				
			Phenol				
			Quinoline				
			Styrene				
			Toluene				
			m-Xylene				
			o-Xylene				
			p-Xylene				
			Acenaphthene	55.590	6.51	152.88	159.39
			Acenaphthylene				
			Anthracene	4.635	0.54	12.75	13.29
			Benzo(a)anthracene	0.268	0.03	0.74	0.77
			Benzo(b)fluoranthene	0.025	0.00	0.07	0.07
			Benzo(k)fluoranthene	0.003	0.00	0.01	0.01
			Benzo(g,h,i)perylene				
			Benzo(a)pyrene	0.028	0.00	0.08	0.08
			Chrysene	0.095	0.01	0.26	0.27
			Dibenzo(a,h)anthracene				
			Fluoranthene	3.344	0.39	9.20	9.59
			Fluorene	20.623	2.41	56.72	59.13
			Indeno(1,2,3-cd)pyrene				
			Phenanthrene	13.223	1.55	36.37	37.91
			Pyrene	2.115	0.25	5.82	6.07

Tank ID	Contents	Control Device	% Control	Throughput (gal)	No. Days in Service	Temp °F	D (ft)	Hs (ft)	H_L (ft)	V (gal)	Turn overs	Heat (Y/N)	DP_B (psia)	a	I	T_{LA} (R)	Mv (lb/mol)	Pva (psia)	Taa (R)	Tax (R)	Tan (R)	DT_A (R)	Tsa (R)	Tsx (R)	Tsn (R)	DTs (R)	T_{LX} (R)	T_{LN} (R)	P_{LX} (psia)	P_{LN} (psia)	DP_V (psia)	Vv (ft³)	H_{VO} (ft)	T_B (R)	Wv lb/ft³	K_E	DT_v (R)	K_S	Turnover Factor
Tank 808	Petro Pitch	Scrubber E	80	2,566,667	365	500	23.0	21.0	10.5	65,267	39.3	Y		0.89	1.203	959.44	162.94 at T_{LA}	0.1381 at T_{LA}	510.25	519.8	500.7	19.1	960	970	950	20	970	950	0.1603 at T_{LX}	0.1206 at T_{LN}	0.0397	4,462	10.74	959.00	0.0022	0.018	14.4	0.927	1.000

Uncontrolled VOC Emissions L_S (lb/yr)	L_W (lb/yr)	Total (lb/yr)		% wgt vapors at T_{LA}	Controlled VOC Emissions L_S (lb/yr)	L_W (lb/yr)	Total (lb/yr)
58.54	1.375.03	1.433.57	**VOC**	100.00	11.71	275.01	286.71
			Benzene				
			Biphenyl				
			m-Cresol				
			o-Cresol				
			p-Cresol				
			Cumene				
			Dibenzofuran				
			Ethylbenzene				
			Naphthalene				
			Phenol				
			Quinoline				
			Styrene				
			Toluene				
			m-Xylene				
			o-Xylene				
			p-Xylene				
			Acenaphthene	55.590	6.51	152.88	159.39
			Acenaphthylene				
			Anthracene	4.635	0.54	12.75	13.29
			Benzo(a)anthracene	0.268	0.03	0.74	0.77
			Benzo(b)fluoranthene	0.025	0.00	0.07	0.07
			Benzo(k)fluoranthene	0.003	0.00	0.01	0.01
			Benzo(g,h,i)perylene				
			Benzo(a)pyrene	0.028	0.00	0.08	0.08
			Chrysene	0.095	0.01	0.26	0.27
			Dibenzo(a,h)anthracene				
			Fluoranthene	3.344	0.39	9.20	9.59
			Fluorene	20.623	2.41	56.72	59.13
			Indeno(1,2,3-cd)pyrene				
			Phenanthrene	13.223	1.55	36.37	37.91
			Pyrene	2.115	0.25	5.82	6.07

Table 5-7A.

2018 Potential Emissions Inventory, Pavement Sealer Base Storage Tanks, Case 1 - Pavement Sealer Base
Koppers Inc., Follansbee Tar Plant, Follansbee, West Virginia
Note: Emissions were estimated using methodology outlined in AP-42, Section 7.1, Organic Liquid Storage Tanks 11/06

Tank ID	Contents	Control Device	% Control	Throughput (gal)	Not Days in Service	Temp °F	D (ft)	Hs (ft)	H_L (ft)	V (gal)	Turn overs	Heat (Y/N)	DP_B (psia)	a	b	T_{LA} (R)	Mv (lb/mol)	Pva (psia)	Taa (R)	Tax (R)	Tan (R)	DT_A (R)	Tsa (R)	Tsx (R)	Tsn (R)	DTs (R)	T_{LX} (R)	T_{LN} (R)	P_{LX} (psia)	P_{LN} (psia)	DP_V (psia)	Vv (ft³)	H_{VO} (ft)	T_B (R)	Wv lb/ft³	K_E	DT_V (R)	K_S	Turnover Factor
Tank 13	Pavement Sealer Base	Flare or TO	98	2,790,000	365	450	24.0	20.3	10.1	68,528	40.7	Y		0.89	1,203	909.44	138.55 at T_{LA}	0.9488 at T_{LA}	510.25	519.8	500.7	19.1	910	920	900	20	920	900	1.1006 at T_{LX}	0.8286 at T_{LN}	0.2720	4.694	10.38	909.00	0.0135	0.036	14.4	0.657	1.000

Uncontrolled VOC Emissions L_S (lb/yr)	L_W (lb/yr)	Total (lb/yr)		%a wgt vapors at T_{LA}	Controlled VOC Emissions L_S (lb/yr)	L_W (lb/yr)	Total (lb/yr)
540.02	8.728.99	9,269.02	**VOC**	100.00	10.80	174.58	185.38
			Benzene				
			Biphenyl	0.713	0.08	1.24	1.32
			m-Cresol				
			o-Cresol				
			p-Cresol				
			Cumene				
			Dibenzofuran	4.675	0.50	8.16	8.67
			Ethylbenzene				
			Naphthalene	60.650	6.55	105.88	112.43
			Phenol				
			Quinoline	0.671	0.07	1.17	1.24
			Styrene				
			Toluene				
			m-Xylene				
			o-Xylene				
			p-Xylene				
			Acenaphthene	7.937	0.86	13.86	14.71
			Acenaphthylene	0.256	0.03	0.45	0.47
			Anthracene	1.288	0.14	2.25	2.39
			Benzo(a)anthracene	0.067	0.01	0.12	0.12
			Benzo(b)fluoranthene	0.016	0.00	0.03	0.03
			Benzo(k)fluoranthene	0.002	0.00	0.00	0.00
			Benzo(g,h,i)perylene	0.001	0.00	0.00	0.00
			Benzo(a)pyrene	0.005	0.00	0.01	0.01
			Chrysene	0.012	0.00	0.02	0.02
			Dibenzo(a,h)anthracene	0.000	0.00	0.00	0.00
			Fluoranthene	2.176	0.24	3.80	4.03
			Fluorene	4.701	0.51	8.21	8.72
			Indeno(1,2,3-cd)pyrene	0.001	0.00	0.00	0.00
			Phenanthrene	4.262	0.46	7.44	7.90
			Pyrene	0.334	0.04	0.58	0.62

Tank ID	Contents	Control Device	% Control	Throughput (gal)	Not Days in Service	Temp °F	D (ft)	Hs (ft)	H_L (ft)	V (gal)	Turn overs	Heat (Y/N)	DP_B (psia)	a	b	T_{LA} (R)	Mv (lb/mol)	Pva (psia)	Taa (R)	Tax (R)	Tan (R)	DT_A (R)	Tsa (R)	Tsx (R)	Tsn (R)	DTs (R)	T_{LX} (R)	T_{LN} (R)	P_{LX} (psia)	P_{LN} (psia)	DP_V (psia)	Vv (ft³)	H_{VO} (ft)	T_B (R)	Wv lb/ft³	K_E	DT_V (R)	K_S	Turnover Factor
Tank 14	Pavement Sealer Base	Flare or TO	98	2,790,000	365	450	24.0	20.3	10.1	68,528	40.7	Y		0.89	1,203	909.44	138.55 at T_{LA}	0.9488 at T_{LA}	510.25	519.8	500.7	19.1	910	920	900	20	920	900	1.1006 at T_{LX}	0.8286 at T_{LN}	0.2720	4.694	10.38	909.00	0.0135	0.036	14.4	0.657	1.000

Uncontrolled VOC Emissions L_S (lb/yr)	L_W (lb/yr)	Total (lb/yr)		%a wgt vapors at T_{LA}	Controlled VOC Emissions L_S (lb/yr)	L_W (lb/yr)	Total (lb/yr)
540.02	8.728.99	9,269.02	**VOC**	100.00	10.80	174.58	185.38
			Benzene				
			Biphenyl	0.713	0.08	1.24	1.32
			m-Cresol				
			o-Cresol				
			p-Cresol				
			Cumene				
			Dibenzofuran	4.675	0.50	8.16	8.67
			Ethylbenzene				
			Naphthalene	60.650	6.55	105.88	112.43
			Phenol				
			Quinoline	0.671	0.07	1.17	1.24
			Styrene				
			Toluene				
			m-Xylene				
			o-Xylene				
			p-Xylene				
			Acenaphthene	7.937	0.86	13.86	14.71
			Acenaphthylene	0.256	0.03	0.45	0.47
			Anthracene	1.288	0.14	2.25	2.39
			Benzo(a)anthracene	0.067	0.01	0.12	0.12
			Benzo(b)fluoranthene	0.016	0.00	0.03	0.03
			Benzo(k)fluoranthene	0.002	0.00	0.00	0.00
			Benzo(g,h,i)perylene	0.001	0.00	0.00	0.00
			Benzo(a)pyrene	0.005	0.00	0.01	0.01
			Chrysene	0.012	0.00	0.02	0.02
			Dibenzo(a,h)anthracene	0.000	0.00	0.00	0.00
			Fluoranthene	2.176	0.24	3.80	4.03
			Fluorene	4.701	0.51	8.21	8.72
			Indeno(1,2,3-cd)pyrene	0.001	0.00	0.00	0.00
			Phenanthrene	4.262	0.46	7.44	7.90
			Pyrene	0.334	0.04	0.58	0.62

Table 5-7A. 2018 Potential Emissions Inventory, Pavement Sealer Base Storage Tanks, Case 1 - Pavement Sealer Base
Koppers Inc., Follansbee Tar Plant, Follansbee, West Virginia
Note: Emissions were estimated using methodology outlined in AP-42, Section 7.1, Organic Liquid Storage Tanks, 11/06

Tank ID	Contents	Control Device	% Control	Throughput (gal)	No. Days in Service	Temp °F	D (ft)	Hs (ft)	H_L (ft)	V (gal)	Turn overs	Heat (Y/N)	DP_B (psia)	a	I	T_{LA} (R)	Mv (lb/mol)	Pva (psia)	Taa (R)	Tax (R)	Tan (R)	DT_A (R)	Tsa (R)	Tsx (R)	Tsn (R)	DTs (R)	T_{LX} (R)	T_{LN} (R)	P_{TX} (psia)	P_{TN} (psia)	DP_V (psia)	Vv (ft³)	H_{VO} (ft)	T_B (R)	Wv lb/ft³	K_E	DT_V (R)	K_S	Turnover Factor
Tank 406	Pavement Sealer Base	Flare or TO	98	2,790,000	365	450	12.0	27.0	13.5	22,843	122.1	Y		0.89	1.203	909.44	138.55 at T_{LA}	0.9488 at T_{LA}	510.25	519.8	500.7	19.1	910	920	900	20	920	900	1.1006 at T_{LX}	0.8286 at T_{LN}	0.2720	1.541	13.63	909.00	0.0135	0.036	14.4	0.593	1.000

Uncontrolled VOC Emissions L_S (lb/yr)	L_W (lb/yr)	Total (lb/yr)		% wgt vapors at T_{LA}	Controlled VOC Emissions L_S (lb/yr)	L_W (lb/yr)	Total (lb/yr)
160.10	8,728.99	8,889.09	**VOC**	100.00	3.20	174.58	177.78
			Benzene				
			Biphenyl	0.713	0.02	1.24	1.27
			m-Cresol				
			o-Cresol				
			p-Cresol				
			Cumene				
			Dibenzofuran	4.675	0.15	8.16	8.31
			Ethylbenzene				
			Naphthalene	60.650	1.94	105.88	107.82
			Phenol				
			Quinoline	0.671	0.02	1.17	1.19
			Styrene				
			Toluene				
			m-Xylene				
			o-Xylene				
			p-Xylene				
			Acenaphthene	7.937	0.25	13.86	14.11
			Acenaphthylene	0.256	0.01	0.45	0.45
			Anthracene	1.288	0.04	2.25	2.29
			Benzo(a)anthracene	0.067	0.00	0.12	0.12
			Benzo(b)fluoranthene	0.016	0.00	0.03	0.03
			Benzo(k)fluoranthene	0.002	0.00	0.00	0.00
			Benzo(g,h,i)perylene	0.001	0.00	0.00	0.00
			Benzo(a)pyrene	0.005	0.00	0.01	0.01
			Chrysene	0.012	0.00	0.02	0.02
			Dibenzo(a,h)anthracene	0.000	0.00	0.00	0.00
			Fluoranthene	2.176	0.07	3.80	3.87
			Fluorene	4.701	0.15	8.21	8.36
			Indeno(1,2,3-cd)pyrene	0.001	0.00	0.00	0.00
			Phenanthrene	4.262	0.14	7.44	7.58
			Pyrene	0.334	0.01	0.58	0.59

Tank ID	Contents	Control Device	% Control	Throughput (gal)	No. Days in Service	Temp °F	D (ft)	Hs (ft)	H_L (ft)	V (gal)	Turn overs	Heat (Y/N)	DP_B (psia)	a	I	T_{LA} (R)	Mv (lb/mol)	Pva (psia)	Taa (R)	Tax (R)	Tan (R)	DT_A (R)	Tsa (R)	Tsx (R)	Tsn (R)	DTs (R)	T_{LX} (R)	T_{LN} (R)	P_{TX} (psia)	P_{TN} (psia)	DP_V (psia)	Vv (ft³)	H_{VO} (ft)	T_B (R)	Wv lb/ft³	K_E	DT_V (R)	K_S	Turnover Factor
Tank 407	Pavement Sealer Base	Flare or TO	98	2,790,000	365	450	12.0	27.0	13.5	22,843	122.1	Y		0.89	1.203	909.44	138.55 at T_{LA}	0.9488 at T_{LA}	510.25	519.8	500.7	19.1	910	920	900	20	920	900	1.1006 at T_{LX}	0.8286 at T_{LN}	0.2720	1.541	13.63	909.00	0.0135	0.036	14.4	0.593	1.000

Uncontrolled VOC Emissions L_S (lb/yr)	L_W (lb/yr)	Total (lb/yr)		% wgt vapors at T_{LA}	Controlled VOC Emissions L_S (lb/yr)	L_W (lb/yr)	Total (lb/yr)
160.10	8,728.99	8,889.09	**VOC**	100.00	3.20	174.58	177.78
			Benzene				
			Biphenyl	0.713	0.02	1.24	1.27
			m-Cresol				
			o-Cresol				
			p-Cresol				
			Cumene				
			Dibenzofuran	4.675	0.15	8.16	8.31
			Ethylbenzene				
			Naphthalene	60.650	1.94	105.88	107.82
			Phenol				
			Quinoline	0.671	0.02	1.17	1.19
			Styrene				
			Toluene				
			m-Xylene				
			o-Xylene				
			p-Xylene				
			Acenaphthene	7.937	0.25	13.86	14.11
			Acenaphthylene	0.256	0.01	0.45	0.45
			Anthracene	1.288	0.04	2.25	2.29
			Benzo(a)anthracene	0.067	0.00	0.12	0.12
			Benzo(b)fluoranthene	0.016	0.00	0.03	0.03
			Benzo(k)fluoranthene	0.002	0.00	0.00	0.00
			Benzo(g,h,i)perylene	0.001	0.00	0.00	0.00
			Benzo(a)pyrene	0.005	0.00	0.01	0.01
			Chrysene	0.012	0.00	0.02	0.02
			Dibenzo(a,h)anthracene	0.000	0.00	0.00	0.00
			Fluoranthene	2.176	0.07	3.80	3.87
			Fluorene	4.701	0.15	8.21	8.36
			Indeno(1,2,3-cd)pyrene	0.001	0.00	0.00	0.00
			Phenanthrene	4.262	0.14	7.44	7.58
			Pyrene	0.334	0.01	0.58	0.59

Table 5-7B. 2018 Potential Emissions Inventory,Refined Tar/Pavement Sealer Base Storage Tanks. Case 2 - Modified Pavement Sealer Base Production, Addition of PSB
Koppers Inc., Follansbee Tar Plant, Follansbee, West Virginia

Note: Emissions were estimated using methodology outlined in AP-42, Section 7.1, Organic Liquid Storage Tanks, 11/06

Tank ID	Contents	Control Device	% Control	Throughput (gal)	No. Days in Service	Temp °F	D (ft)	Hs (ft)	H_L (ft)	V (gal)	Turn overs	Heat (Y/N)	DP_B (psia)	a	b	T_{LA} (R)	Ms (lb/mol)	Pva (psia)	Taa (R)	Tax (R)	Tan (R)	DT_A (R)	Tsa (R)	Tsx (R)	Tsn (R)	DTs (R)	T_{LX} (R)	T_{LN} (R)	P_{LX} (psia)	P_{LN} (psia)	DP_V (psia)	Vv (ft³)	H_{VO} (ft)	T_B (R)	Wv lb/ft³	K_E	DT, (R)	K_S	Turnover Factor
Tank 13	Pavement Sealer Base	Flare or TO	98	2,790,000	365	450	24.0	20.3	10.1	68,528	40.7	Y		0.89	1,203	909.44	138.55 at T_{LA}	0.9488 at T_{LA}	510.25	519.8	500.7	19.1	910	920	900	20	920	900	1.1006 at T_{LX}	0.8286 at T_{LN}	0.2720	4,694	10.38	909.00	0.0135	0.036	14.4	0.657	1.000

Turnover Factor Set to 1 to allow treatment as a process tank, not storage tank
Standing losses calculated to allow for use of storage tank for PSB

Uncontrolled VOC Emissions L_S (lb/yr)	L_W (lb/yr)	Total (lb/yr)		% wgt vapors at T_{LA}	Controlled VOC Emissions L_S (lb/yr)	L_W (lb/yr)	Total (lb/yr)
540.02	8.728.99	9,269.02	**VOC**	100.00	10.80	174.58	185.38
			Benzene				
			Biphenyl	0.713	0.08	1.24	1.32
			m-Cresol				
			o-Cresol				
			p-Cresol				
			Cumene				
			Dibenzofuran	4.675	0.50	8.16	8.67
			Ethylbenzene				
			Naphthalene	60.650	6.55	105.88	112.43
			Phenol				
			Quinoline	0.671	0.07	1.17	1.24
			Styrene				
			Toluene				
			m-Xylene				
			o-Xylene				
			p-Xylene				
			Acenaphthene	7.937	0.86	13.86	14.71
			Acenaphthylene	0.256	0.03	0.45	0.47
			Anthracene	1.288	0.14	2.25	2.39
			Benzo(a)anthracene	0.067	0.01	0.12	0.12
			Benzo(b)fluoranthene	0.016	0.00	0.03	0.03
			Benzo(k)fluoranthene	0.002	0.00	0.00	0.00
			Benzo(g,h,i)perylene	0.001	0.00	0.00	0.00
			Benzo(a)pyrene	0.005	0.00	0.01	0.01
			Chrysene	0.012	0.00	0.02	0.02
			Dibenzo(a,h)anthracene	0.000	0.00	0.00	0.00
			Fluoranthene	2.176	0.24	3.80	4.03
			Fluorene	4.701	0.51	8.21	8.72
			Indeno(1,2,3-cd)pyrene	0.001	0.00	0.00	0.00
			Phenanthrene	4.262	0.46	7.44	7.90
			Pyrene	0.334	0.04	0.58	0.62

| Tank 14 | Pavement Sealer Base | Flare or TO | 98 | 2,790,000 | 365 | 450 | 24.0 | 20.3 | 10.1 | 68,528 | 40.7 | Y | | 0.89 | 1,203 | 909.44 | 138.55 at T_{LA} | 0.9488 at T_{LA} | 510.25 | 519.8 | 500.7 | 19.1 | 910 | 920 | 900 | 20 | 920 | 900 | 1.1006 at T_{LX} | 0.8286 at T_{LN} | 0.2720 | 4,694 | 10.38 | 909.00 | 0.0135 | 0.036 | 14.4 | 0.657 | 1.000 |

Uncontrolled VOC Emissions L_S (lb/yr)	L_W (lb/yr)	Total (lb/yr)		% wgt vapors at T_{LA}	Controlled VOC Emissions L_S (lb/yr)	L_W (lb/yr)	Total (lb/yr)
540.02	8.728.99	9,269.02	**VOC**	100.00	10.80	174.58	185.38
			Benzene				
			Biphenyl	0.713	0.08	1.24	1.32
			m-Cresol				
			o-Cresol				
			p-Cresol				
			Cumene				
			Dibenzofuran	4.675	0.50	8.16	8.67
			Ethylbenzene				
			Naphthalene	60.650	6.55	105.88	112.43
			Phenol				
			Quinoline	0.671	0.07	1.17	1.24
			Styrene				
			Toluene				
			m-Xylene				
			o-Xylene				
			p-Xylene				
			Acenaphthene	7.937	0.86	13.86	14.71
			Acenaphthylene	0.256	0.03	0.45	0.47
			Anthracene	1.288	0.14	2.25	2.39
			Benzo(a)anthracene	0.067	0.01	0.12	0.12
			Benzo(b)fluoranthene	0.016	0.00	0.03	0.03
			Benzo(k)fluoranthene	0.002	0.00	0.00	0.00
			Benzo(g,h,i)perylene	0.001	0.00	0.00	0.00
			Benzo(a)pyrene	0.005	0.00	0.01	0.01
			Chrysene	0.012	0.00	0.02	0.02
			Dibenzo(a,h)anthracene	0.000	0.00	0.00	0.00
			Fluoranthene	2.176	0.24	3.80	4.03
			Fluorene	4.701	0.51	8.21	8.72
			Indeno(1,2,3-cd)pyrene	0.001	0.00	0.00	0.00
			Phenanthrene	4.262	0.46	7.44	7.90
			Pyrene	0.334	0.04	0.58	0.62

Table 5-7B. 2018 Potential Emissions Inventory,Refined Tar/Pavement Sealer Base Storage Tanks, Case 2 - Modified Pavement Sealer Base Production, Addition of PSB
Koppers Inc., Follansbee Tar Plant, Follansbee, West Virginia

Note: Emissions were estimated using methodology outlined in AP-42, Section 7.1, Organic Liquid Storage Tanks, 11/06

Tank ID	Contents	Control Device	% Control	Throughput (gal)	No. Days in Service	Temp °F	D (ft)	Hs (ft)	H_L (ft)	V (gal)	Turn overs	Heat (Y/N)	DP_B (psia)	a	b	T_{LA} (R)	Mv (lb/mol)	Pva (psia)	Taa (R)	Tax (R)	Tan (R)	DT_A (R)	Tsa (R)	Tsx (R)	Tsn (R)	DTs (R)	T_{LX} (R)	T_{LN} (R)	P_{LX} (psia)	P_{LN} (psia)	DP_V (psia)	Vv (ft³)	H_{VO} (ft)	T_B (R)	Wv lb/ft³	K_E	DT_v (R)	K_S	Turnover Factor
Tank 406	Pavement Sealer Base	Flare or TO	98	2,790,000	365	450	12.0	27.0	13.5	22,843	122.1	Y		0.89	1,203	909.44	138.55 at T_{LA}	0.9488 at T_{LA}	510.25	519.8	500.7	19.1	910	920	900	20	920	900	1.1006 at T_{LX}	0.8286 at T_{LN}	0.2720	1.541	13.63	909.00	0.0135	0.036	14.4	0.593	1.000

Uncontrolled VOC Emissions L_S (lb/yr)	L_W (lb/yr)	Total (lb/yr)		% wgt vapors at T_{LA}	Controlled VOC Emissions L_S (lb/yr)	L_W (lb/yr)	Total (lb/yr)
160.10	8,728.99	8,889.09	VOC	100.00	3.20	174.58	177.78
			Benzene				
			Biphenyl	0.713	0.02	1.24	1.27
			m-Cresol				
			o-Cresol				
			p-Cresol				
			Cumene				
			Dibenzofuran	4.675	0.15	8.16	8.31
			Ethylbenzene				
			Naphthalene	60.650	1.94	105.88	107.82
			Phenol				
			Quinoline	0.671	0.02	1.17	1.19
			Styrene				
			Toluene				
			m-Xylene				
			o-Xylene				
			p-Xylene				
			Acenaphthene	7.937	0.25	13.86	14.11
			Acenaphthylene	0.256	0.01	0.45	0.45
			Anthracene	1.288	0.04	2.25	2.29
			Benzo(a)anthracene	0.067	0.00	0.12	0.12
			Benzo(b)fluoranthene	0.016	0.00	0.03	0.03
			Benzo(k)fluoranthene	0.002	0.00	0.00	0.00
			Benzo(g,h,i)perylene	0.001	0.00	0.00	0.00
			Benzo(a)pyrene	0.005	0.00	0.01	0.01
			Chrysene	0.012	0.00	0.02	0.02
			Dibenzo(a,h)anthracene	0.000	0.00	0.00	0.00
			Fluoranthene	2.176	0.07	3.80	3.87
			Fluorene	4.701	0.15	8.21	8.36
			Indeno(1,2,3-cd)pyrene	0.001	0.00	0.00	0.00
			Phenanthrene	4.262	0.14	7.44	7.58
			Pyrene	0.334	0.01	0.58	0.59

Tank ID	Contents	Control Device	% Control	Throughput (gal)	No. Days in Service	Temp °F	D (ft)	Hs (ft)	H_L (ft)	V (gal)	Turn overs	Heat (Y/N)	DP_B (psia)	a	b	T_{LA} (R)	Mv (lb/mol)	Pva (psia)	Taa (R)	Tax (R)	Tan (R)	DT_A (R)	Tsa (R)	Tsx (R)	Tsn (R)	DTs (R)	T_{LX} (R)	T_{LN} (R)	P_{LX} (psia)	P_{LN} (psia)	DP_V (psia)	Vv (ft³)	H_{VO} (ft)	T_B (R)	Wv lb/ft³	K_E	DT_v (R)	K_S	Turnover Factor
Tank 407	Pavement Sealer Base	Flare or TO	98	2,790,000	365	450	12.0	27.0	13.5	22,843	122.1	Y		0.89	1,203	909.44	138.55 at T_{LA}	0.9488 at T_{LA}	510.25	519.8	500.7	19.1	910	920	900	20	920	900	1.1006 at T_{LX}	0.8286 at T_{LN}	0.2720	1.541	13.63	909.00	0.0135	0.036	14.4	0.593	1.000

Uncontrolled VOC Emissions L_S (lb/yr)	L_W (lb/yr)	Total (lb/yr)		% wgt vapors at T_{LA}	Controlled VOC Emissions L_S (lb/yr)	L_W (lb/yr)	Total (lb/yr)
160.10	8,728.99	8,889.09	VOC	100.00	3.20	174.58	177.78
			Benzene				
			Biphenyl	0.713	0.02	1.24	1.27
			m-Cresol				
			o-Cresol				
			p-Cresol				
			Cumene				
			Dibenzofuran	4.675	0.15	8.16	8.31
			Ethylbenzene				
			Naphthalene	60.650	1.94	105.88	107.82
			Phenol				
			Quinoline	0.671	0.02	1.17	1.19
			Styrene				
			Toluene				
			m-Xylene				
			o-Xylene				
			p-Xylene				
			Acenaphthene	7.937	0.25	13.86	14.11
			Acenaphthylene	0.256	0.01	0.45	0.45
			Anthracene	1.288	0.04	2.25	2.29
			Benzo(a)anthracene	0.067	0.00	0.12	0.12
			Benzo(b)fluoranthene	0.016	0.00	0.03	0.03
			Benzo(k)fluoranthene	0.002	0.00	0.00	0.00
			Benzo(g,h,i)perylene	0.001	0.00	0.00	0.00
			Benzo(a)pyrene	0.005	0.00	0.01	0.01
			Chrysene	0.012	0.00	0.02	0.02
			Dibenzo(a,h)anthracene	0.000	0.00	0.00	0.00
			Fluoranthene	2.176	0.07	3.80	3.87
			Fluorene	4.701	0.15	8.21	8.36
			Indeno(1,2,3-cd)pyrene	0.001	0.00	0.00	0.00
			Phenanthrene	4.262	0.14	7.44	7.58
			Pyrene	0.334	0.01	0.58	0.59

Table 5-7C. 2018 Potential Emissions Inventory,Refined Tar/Pavement Sealer Base Storage Tanks, Case 2 - Modified Pavement Sealer Base Production, Addition of Petro Tar
Koppers Inc., Follansbee Tar Plant, Follansbee, West Virginia

Note: Emissions were estimated using methodology outlined in AP-42, Section 7.1, Organic Liquid Storage Tanks, 11/06

Tank ID	Contents	Control Device	% Control	Throughput (gal)	No. Days in Service	Temp °F	D (ft)	Hs (ft)	H_L (ft)	V (gal)	Turn overs	Heat (Y/N)	DP_B (psia)	a	b	T_{LA} (R)	Mv (lb/mol)	P_{VA} (psia)	Taa (R)	Tax (R)	Tan (R)	DT_A (R)	Tsa (R)	Tsx (R)	Tsn (R)	DTs (R)	T_{LX} (R)	T_{LN} (R)	P_{LX} (psia)	P_{LN} (psia)	DP_V (psia)	Vv (ft^3)	H_{VO} (ft)	T_B (R)	Wv (lb/ft^3)	K_E	DT_v (R)	K_S	Turnover Factor
Tank 13	Petro Tar	Flare or TO	98	1,195,714	365	250	24.0	20.3	10.1	68.528	17.4	Y		0.89	1,203	709.44	136.74 at T_{LA}	0.0115 at T_{LA}	510.25	519.8	500.7	19.1	710	720	700	20	720	700	at T_{LX}	at T_{LN}		4,694	10.38	709.00	0.0002	0.020	14.4	0.994	1.000

No Standing Losses for the addition of material.
Standing losses accounted for in PSB addition
Turnover Factor Set to 1

	Uncontrolled VOC Emissions L_S (lb/yr)	L_W (lb/yr)	Total (lb/yr)		% wgt vapors at T_{LA}	Controlled VOC Emissions L_S (lb/yr)	L_W (lb/yr)	Total (lb/yr)
		44.89	44.89	VOC	100.00		0.90	0.90
				Benzene				
				Biphenyl	1.483		0.01	0.01
				m-Cresol				
				o-Cresol				
				p-Cresol				
				Cumene				
				Dibenzofuran	1.512		0.01	0.01
				Ethylbenzene				
				Naphthalene	53.773		0.48	0.48
				Phenol				
				Quinoline	0.863		0.01	0.01
				Styrene				
				Toluene				
				m-Xylene				
				o-Xylene				
				p-Xylene				
				Acenaphthene	9.524		0.09	0.09
				Acenaphthylene	2.721		0.02	0.02
				Anthracene	0.308		0.00	0.00
				Benzo(a)anthracene	0.002		0.00	0.00
				Benzo(b)fluoranthene				
				Benzo(k)fluoranthene				
				Benzo(g,h,i)perylene				
				Benzo(a)pyrene	0.000		0.00	0.00
				Chrysene	0.000		0.00	0.00
				Dibenzo(a,h)anthracene				
				Fluoranthene	0.284		0.00	0.00
				Fluorene	2.412		0.02	0.02
				Indeno(1,2,3-cd)pyrene	0.000		0.00	0.00
				Phenanthrene	0.930		0.01	0.01
				Pyrene	0.034		0.00	0.00

| Tank 14 | Petro Tar | Flare or TO | 98 | 1,195,714 | 365 | 250 | 24.0 | 20.3 | 10.1 | 68.528 | 17.4 | Y | | 0.89 | 1,203 | 709.44 | 136.74 at T_{LA} | 0.0115 at T_{LA} | 510.25 | 519.8 | 500.7 | 19.1 | 710 | 720 | 700 | 20 | 720 | 700 | at T_{LX} | at T_{LN} | | 4,694 | 10.38 | 709.00 | 0.0002 | 0.020 | 14.4 | 0.994 | 1.000 |

No Standing Losses for the addition of material.
Standing losses accounted for in PSB addition
Turnover Factor Set to 1

	Uncontrolled VOC Emissions L_S (lb/yr)	L_W (lb/yr)	Total (lb/yr)		% wgt vapors at T_{LA}	Controlled VOC Emissions L_S (lb/yr)	L_W (lb/yr)	Total (lb/yr)
		44.89	44.89	VOC	100.00		0.90	0.90
				Benzene				
				Biphenyl	1.483		0.01	0.01
				m-Cresol				
				o-Cresol				
				p-Cresol				
				Cumene				
				Dibenzofuran	1.512		0.01	0.01
				Ethylbenzene				
				Naphthalene	53.773		0.48	0.48
				Phenol				
				Quinoline	0.863		0.01	0.01
				Styrene				
				Toluene				
				m-Xylene				
				o-Xylene				
				p-Xylene				
				Acenaphthene	9.524		0.09	0.09
				Acenaphthylene	2.721		0.02	0.02
				Anthracene	0.308		0.00	0.00
				Benzo(a)anthracene	0.002		0.00	0.00
				Benzo(b)fluoranthene				
				Benzo(k)fluoranthene				
				Benzo(g,h,i)perylene				
				Benzo(a)pyrene	0.000		0.00	0.00
				Chrysene	0.000		0.00	0.00
				Dibenzo(a,h)anthracene				
				Fluoranthene	0.284		0.00	0.00
				Fluorene	2.412		0.02	0.02
				Indeno(1,2,3-cd)pyrene	0.000		0.00	0.00
				Phenanthrene	0.930		0.01	0.01
				Pyrene	0.034		0.00	0.00

Table 5-7C. 2018 Potential Emissions Inventory,Refined Tar/Pavement Sealer Base Storage Tanks, Case 2 - Modified Pavement Sealer Base Production, Addition of Petro Tar
Koppers Inc., Follansbee Tar Plant, Follansbee, West Virginia

Note: Emissions were estimated using methodology outlined in AP-42, Section 7.1, Organic Liquid Storage Tanks, 11/06

Tank ID	Contents	Control Device	% Control	Throughput (gal)	No. Days in Service	Temp °F	D (ft)	Hs (ft)	H_L (ft)	V (gal)	Turn overs	Heat (Y/N)	DP_B (psia)	a	I	T_{LA} (R)	Ms (lb/mol)	Pva (psia)	Taa (R)	Tax (R)	Tan (R)	DT_A (R)	Tsa (R)	Tsx (R)	Tsn (R)	DTs (R)	T_{LX} (R)	T_{LN} (R)	P_{TX} (psia)	P_{TN} (psia)	DP_v (psia)	Vv (ft³)	H_{VO} (ft)	T_B (R)	Wv lb/ft³	K_E	DT_v (R)	K_S	Turnover Factor
Tank 406	Petro Tar	Flare or TO	98	1,195,714	365	250	12.0	27.0	13.5	22.843	52.3	Y		0.89	1,203	709.44	136.74 at T_{LA}	0.0115 at T_{LA}	510.25	519.8	500.7	19.1	710	720	700	20	720	700	at T_{LX}	at T_{LN}		1.541	13.63	709.00	0.0002	0.020	14.4	0.992	1.000

No Standing Losses for the addition of material.
Standing losses accounted for in PSB addition
Turnover Factor Set to 1

	Uncontrolled VOC Emissions L_S (lb/yr)	L_W (lb/yr)	Total (lb/yr)		% wgt vapors at T_{LX}	Controlled VOC Emissions L_S (lb/yr)	L_W (lb/yr)	Total (lb/yr)
		44.89	44.89	**VOC**	100.00		0.90	0.90
				Benzene				
				Biphenyl	1.483		0.01	0.01
				m-Cresol				
				o-Cresol				
				p-Cresol				
				Cumene				
				Dibenzofuran	1.512		0.01	0.01
				Ethylbenzene				
				Naphthalene	53.773		0.48	0.48
				Phenol				
				Quinoline	0.863		0.01	0.01
				Styrene				
				Toluene				
				m-Xylene				
				o-Xylene				
				p-Xylene				
				Acenaphthene	9.524		0.09	0.09
				Acenaphthylene	2.721		0.02	0.02
				Anthracene	0.308		0.00	0.00
				Benzo(a)anthracene	0.002		0.00	0.00
				Benzo(b)fluoranthene				
				Benzo(k)fluoranthene				
				Benzo(g,h,i)perylene				
				Benzo(a)pyrene	0.000		0.00	0.00
				Chrysene	0.000		0.00	0.00
				Dibenzo(a,h)anthracene				
				Fluoranthene	0.284		0.00	0.00
				Fluorene	2.412		0.02	0.02
				Indeno(1,2,3-cd)pyrene	0.000		0.00	0.00
				Phenanthrene	0.930		0.01	0.01
				Pyrene	0.034		0.00	0.00

| Tank 407 | Petro Tar | Flare or TO | 98 | 1,195,714 | 365 | 250 | 12.0 | 27.0 | 13.5 | 22.843 | 52.3 | Y | | 0.89 | 1,203 | 709.44 | 136.74 at T_{LA} | 0.0115 at T_{LA} | 510.25 | 519.8 | 500.7 | 19.1 | 710 | 720 | 700 | 20 | 720 | 700 | at T_{LX} | at T_{LN} | | 1.541 | 13.63 | 709.00 | 0.0002 | 0.020 | 14.4 | 0.992 | 1.000 |

No Standing Losses for the addition of material.
Standing losses accounted for in PSB addition
Turnover Factor Set to 1

	Uncontrolled VOC Emissions L_S (lb/yr)	L_W (lb/yr)	Total (lb/yr)		% wgt vapors at T_{LX}	Controlled VOC Emissions L_S (lb/yr)	L_W (lb/yr)	Total (lb/yr)
		44.89	44.89	**VOC**	100.00		0.90	0.90
				Benzene				
				Biphenyl	1.483		0.01	0.01
				m-Cresol				
				o-Cresol				
				p-Cresol				
				Cumene				
				Dibenzofuran	1.512		0.01	0.01
				Ethylbenzene				
				Naphthalene	53.773		0.48	0.48
				Phenol				
				Quinoline	0.863		0.01	0.01
				Styrene				
				Toluene				
				m-Xylene				
				o-Xylene				
				p-Xylene				
				Acenaphthene	9.524		0.09	0.09
				Acenaphthylene	2.721		0.02	0.02
				Anthracene	0.308		0.00	0.00
				Benzo(a)anthracene	0.002		0.00	0.00
				Benzo(b)fluoranthene				
				Benzo(k)fluoranthene				
				Benzo(g,h,i)perylene				
				Benzo(a)pyrene	0.000		0.00	0.00
				Chrysene	0.000		0.00	0.00
				Dibenzo(a,h)anthracene				
				Fluoranthene	0.284		0.00	0.00
				Fluorene	2.412		0.02	0.02
				Indeno(1,2,3-cd)pyrene	0.000		0.00	0.00
				Phenanthrene	0.930		0.01	0.01
				Pyrene	0.034		0.00	0.00

Table 5-8.

2018 Potential Emissions Inventory, Cap Water Storage Tanks Emission Calculations
Koppers Inc., Follansbee Tar Plant, Follansbee, West Virginia
Note: Emissions were estimated using methodology outlined in AP-42, Section 7.1, Organic Liquid Storage Tanks,11/06

Tank ID	Contents	Control Device	% Control	Throughput (gal)	No. Days in Service	Temp °F	D (ft)	Hs (ft)	H_L (ft)	V (gal)	Turn overs	Heat (Y/N)	DP_B (psia)	a	b	T_{LA} (R)	Mv (lb/mol)	Pva (psia)	Taa (R)	Tax (R)	Tan (R)	DT_A (R)	Tsa (R)	Tsx (R)	Tsn (R)	DTs (R)	T_{LX} (R)	T_{LN} (R)	P_{LX} (psia)	P_{LN} (psia)	DP_V (psia)	Vv (ft³)	H_{VO} (ft)	T_B (R)	Wv lb/ft³	K_E	DT_v (R)	K_S	Turnover Factor
Tank 15	Cap Water (from Crude Tar Only)	None		9,000,000	365	130	16.0	40.0	20.0	60,162	149.6	Y		0.89	1,203	589.44	89.96 at T_{LA}	0.0067 at T_{LA}	510.25	519.8	500.7	19.1	590	600	580	20	600	580	0.0085 at T_{LX}	0.0054 at T_{LN}	0.0031	4,055	20.17	589.00	0.0001	0.025	14.4	0.993	1.000

Uncontrolled VOC Emissions L_S (lb/yr)	L_W (lb/yr)	Total (lb/yr)		% wgt vapors at T_{LA}	Controlled VOC Emissions L_S (lb/yr)	L_W (lb/yr)	Total (lb/yr)
3.44	128.56	132.00	**VOC**	100.00	3.44	128.56	132.00
			Benzene	52.658	1.81	67.70	69.51
			Biphenyl	0.065	0.00	0.08	0.09
			m-Cresol	0.282	0.01	0.36	0.37
			o-Cresol	0.264	0.01	0.34	0.35
			p-Cresol	0.240	0.01	0.31	0.32
			Cumene				
			Dibenzofuran	0.032	0.00	0.04	0.04
			Ethylbenzene	0.437	0.02	0.56	0.58
			Naphthalene	9.913	0.34	12.74	13.09
			Phenol	0.990	0.03	1.27	1.31
			Quinoline	0.206	0.01	0.26	0.27
			Styrene	1.423	0.05	1.83	1.88
			Toluene	13.635	0.47	17.53	18.00
			m-Xylene	3.720	0.13	4.78	4.91
			o-Xylene	1.514	0.05	1.95	2.00
			p-Xylene	3.881	0.13	4.99	5.12
			Acenaphthene	0.272	0.01	0.35	0.36
			Acenaphthylene	0.208	0.01	0.27	0.28
			Anthracene	0.005	0.00	0.01	0.01
			Benzo(a)anthracene	0.000	0.00	0.00	0.00
			Benzo(b)fluoranthene	0.000	0.00	0.00	0.00
			Benzo(k)fluoranthene	0.000	0.00	0.00	0.00
			Benzo(g,h,i)perylene	0.000	0.00	0.00	0.00
			Benzo(a)pyrene	0.000	0.00	0.00	0.00
			Chrysene	0.000	0.00	0.00	0.00
			Dibenzo(a,h)anthracene	0.000	0.00	0.00	0.00
			Fluoranthene	0.009	0.00	0.01	0.01
			Fluorene	0.104	0.00	0.13	0.14
			Indeno(1,2,3-cd)pyrene	0.000	0.00	0.00	0.00
			Phenanthrene	0.011	0.00	0.01	0.01
			Pyrene	0.000	0.00	0.00	0.00

Table 5-9. 2018 Potential Emissions Inventory, Petro Tar Storage Tanks Emission Calculations
Koppers Inc., Follansbee Tar Plant, Follansbee, West Virginia

Note: Emissions were estimated using methodology outlined in AP-42, Section 7.1, Organic Liquid Storage Tanks, 11/06

Tank ID	Contents	Control Device	% Control	Throughput (gal)	No. Days in Service	Temp °F	D (ft)	Hs (ft)	H_E (ft)	V (gal)	Turn overs	Heat (Y/N)	DP_B (psia)	a	b	T_{LA} (R)	Mv (lb/mol)	Pva (psia)	Taa (R)	Tax (R)	Tan (R)	DT_A (R)	Tsa (R)	Tsx (R)	Tsn (R)	DTs (R)	T_{LX} (R)	T_{LN} (R)	P_{TX} (psia)	P_{TN} (psia)	DP_V (psia)	Vv (ft³)	H_{VO} (ft)	T_B (R)	Wv lb/ft³	K_E	DT_v (R)	K_S	Turnover Factor
Tank 50	Petro Tar	Flare or TO	98	15,000,000	365	250	72.0	35.0	17.5	1,065,991	14.1	Y		0.89	1,203	709.44	136.74 at T_{LX}	0.0115 at T_{LX}	510.25	519.8	500.7	19.1	710	720	700	20	720	700	0.0147 at T_{LX}	0.0093 at T_{LN}	0.0054	74,305	18.25	709.00	0.0002	0.021	14.4	0.989	1.000

Uncontrolled VOC Emissions L_S (lb/yr)	L_W (lb/yr)	Total (lb/yr)		% wgt vapors at T_{LA}	Controlled VOC Emissions L_S (lb/yr)	L_W (lb/yr)	Total (lb/yr)
114.85	563.11	677.95	**VOC**	100.00	2.30	11.26	13.56
			Benzene				
			Biphenyl				
			m-Cresol				
			o-Cresol				
			p-Cresol				
			Cumene				
			Dibenzofuran				
			Ethylbenzene				
			Naphthalene				
			Phenol				
			Quinoline				
			Styrene				
			Toluene				
			m-Xylene				
			o-Xylene				
			p-Xylene				
			Acenaphthene	55.590	1.28	6.26	7.54
			Acenaphthylene				
			Anthracene	4.635	0.11	0.52	0.63
			Benzo(a)anthracene	0.268	0.01	0.03	0.04
			Benzo(b)fluoranthene	0.025	0.00	0.00	0.00
			Benzo(k)fluoranthene	0.003	0.00	0.00	0.00
			Benzo(g,h,i)perylene				
			Benzo(a)pyrene	0.028	0.00	0.00	0.00
			Chrysene	0.095	0.00	0.01	0.01
			Dibenzo(a,h)anthracene				
			Fluoranthene	3.344	0.08	0.38	0.45
			Fluorene	20.623	0.47	2.32	2.80
			Indeno(1,2,3-cd)pyrene				
			Phenanthrene	13.223	0.30	1.49	1.79
			Pyrene	2.115	0.05	0.24	0.29

Tank ID	Contents	Control Device	% Control	Throughput (gal)	No. Days in Service	Temp °F	D (ft)	Hs (ft)	H_E (ft)	V (gal)	Turn overs	Heat (Y/N)	DP_B (psia)	a	b	T_{LA} (R)	Mv (lb/mol)	Pva (psia)	Taa (R)	Tax (R)	Tan (R)	DT_A (R)	Tsa (R)	Tsx (R)	Tsn (R)	DTs (R)	T_{LX} (R)	T_{LN} (R)	P_{TX} (psia)	P_{TN} (psia)	DP_V (psia)	Vv (ft³)	H_{VO} (ft)	T_B (R)	Wv lb/ft³	K_E	DT_v (R)	K_S	Turnover Factor
Tank 6	Petro Tar	Flare or TO	98	15,000,000	365	250	50.0	35.3	17.7	518,484	28.9	Y		0.89	1,203	709.44	136.74 at T_{LX}	0.0115 at T_{LX}	510.25	519.8	500.7	19.1	710	720	700	20	720	700	0.0147 at T_{LX}	0.0093 at T_{LN}	0.0054	35,678	18.17	709.00	0.0002	0.021	14.4	0.989	1.000

Uncontrolled VOC Emissions L_S (lb/yr)	L_W (lb/yr)	Total (lb/yr)		% wgt vapors at T_{LA}	Controlled VOC Emissions L_S (lb/yr)	L_W (lb/yr)	Total (lb/yr)
55.15	563.11	618.26	**VOC**	100.00	1.10	11.26	12.37
			Benzene				
			Biphenyl				
			m-Cresol				
			o-Cresol				
			p-Cresol				
			Cumene				
			Dibenzofuran				
			Ethylbenzene				
			Naphthalene				
			Phenol				
			Quinoline				
			Styrene				
			Toluene				
			m-Xylene				
			o-Xylene				
			p-Xylene				
			Acenaphthene	55.590	0.61	6.26	6.87
			Acenaphthylene				
			Anthracene	4.635	0.05	0.52	0.57
			Benzo(a)anthracene	0.268	0.00	0.03	0.03
			Benzo(b)fluoranthene	0.025	0.00	0.00	0.00
			Benzo(k)fluoranthene	0.003	0.00	0.00	0.00
			Benzo(g,h,i)perylene				
			Benzo(a)pyrene	0.028	0.00	0.00	0.00
			Chrysene	0.095	0.00	0.01	0.01
			Dibenzo(a,h)anthracene				
			Fluoranthene	3.344	0.04	0.38	0.41
			Fluorene	20.623	0.23	2.32	2.55
			Indeno(1,2,3-cd)pyrene				
			Phenanthrene	13.223	0.15	1.49	1.64
			Pyrene	2.115	0.02	0.24	0.26

Table 5-10. 2018 Potential Emissions Inventory, Petro Distillate Storage Tanks Emission Calculations
Koppers Inc., Follansbee Tar Plant, Follansbee, West Virginia

Note: Emissions were estimated using methodology outlined in AP-42, Section 7.1, Organic Liquid Storage Tanks, 11/06

Tank ID	Contents	Control Device	% Control	Throughput (gal)	No. Days in Service	Temp °F	D (ft)	Hs (ft)	H_L (ft)	V (gal)	Turn overs	Heat (Y/N)	DP_B (psia)	a	b	T_{LA} (R)	Mv (lb/mol)	Pva (psia)	Taa (R)	Tax (R)	Tan (R)	DT_A (R)	Tsa (R)	Tsx (R)	Tsn (R)	DTs (R)	T_{LX} (R)	T_{LN} (R)	P_{LX} (psia)	P_{LN} (psia)	DP_V (psia)	Vv (ft³)	H_{VO} (ft)	T_B (R)	Wv lb/ft³	K_E	DT_v (R)	K_S	Turnover Factor
Tank 7	Petro Distillate	Flare or TO	98	1,838,571	365	200	50.0	35.0	17.5	514,077	3.6	Y		0.89	1,203	659.44	110.92 at T_{LX}	0.1447 at T_{LX}	510.25	519.8	500.7	19.1	660	670	650	20	670	650	0.1447 at T_{LX}	0.0927 at T_{LN}	0.0520	35,384	18.02	659.00	0.0018	0.025	14.4	0.901	1.000

Uncontrolled VOC Emissions L_S (lb/yr)	L_W (lb/yr)	Total (lb/yr)		% wgt vapors at T_{LX}	Controlled VOC Emissions L_S (lb/yr)	L_W (lb/yr)	Total (lb/yr)
531.39	556.52	1,087.91	**VOC**	100.00	10.63	11.13	21.76
			Benzene	15.959	1.70	1.78	3.47
			Biphenyl	0.834	0.09	0.09	0.18
			m-Cresol	0.922	0.10	0.10	0.20
			o-Cresol	1.247	0.13	0.14	0.27
			p-Cresol	0.764	0.08	0.09	0.17
			Cumene				
			Dibenzofuran	0.170	0.02	0.02	0.04
			Ethylbenzene				
			Naphthalene	32.816	3.49	3.65	7.14
			Phenol	0.532	0.06	0.06	0.12
			Quinoline	0.977	0.10	0.11	0.21
			Styrene	0.967	0.10	0.11	0.21
			Toluene	10.869	1.16	1.21	2.36
			m-Xylene	2.416	0.26	0.27	0.53
			o-Xylene	1.514	0.16	0.17	0.33
			p-Xylene	2.492	0.26	0.28	0.54
			Acenaphthene	1.323	0.14	0.15	0.29
			Acenaphthylene	0.991	0.11	0.11	0.22
			Anthracene	0.024	0.00	0.00	0.01
			Benzo(a)anthracene	0.000	0.00	0.00	0.00
			Benzo(b)fluoranthene	0.000	0.00	0.00	0.00
			Benzo(k)fluoranthene	0.000	0.00	0.00	0.00
			Benzo(g,h,i)perylene	0.000	0.00	0.00	0.00
			Benzo(a)pyrene	0.000	0.00	0.00	0.00
			Chrysene	0.000	0.00	0.00	0.00
			Dibenzo(a,h)anthracene	0.000	0.00	0.00	0.00
			Fluoranthene	0.026	0.00	0.00	0.01
			Fluorene	0.398	0.04	0.04	0.09
			Indeno(1,2,3-cd)pyrene				
			Phenanthrene	0.088	0.01	0.01	0.02
			Pyrene	0.002	0.00	0.00	0.00

Tank ID	Contents	Control Device	% Control	Throughput (gal)	No. Days in Service	Temp °F	D (ft)	Hs (ft)	H_L (ft)	V (gal)	Turn overs	Heat (Y/N)	DP_B (psia)	a	b	T_{LA} (R)	Mv (lb/mol)	Pva (psia)	Taa (R)	Tax (R)	Tan (R)	DT_A (R)	Tsa (R)	Tsx (R)	Tsn (R)	DTs (R)	T_{LX} (R)	T_{LN} (R)	P_{LX} (psia)	P_{LN} (psia)	DP_V (psia)	Vv (ft³)	H_{VO} (ft)	T_B (R)	Wv lb/ft³	K_E	DT_v (R)	K_S	Turnover Factor
Tank 9	Petro Distillate	Flare or TO	98	1,838,571	365	200	50.0	35.0	17.5	514,077	3.6	Y		0.89	1,203	659.44	110.92 at T_{LX}	0.1447 at T_{LX}	510.25	519.8	500.7	19.1	660	670	650	20	670	650	0.1447 at T_{LX}	0.0927 at T_{LN}	0.0520	35,384	18.02	659.00	0.0018	0.025	14.4	0.901	1.000

Uncontrolled VOC Emissions L_S (lb/yr)	L_W (lb/yr)	Total (lb/yr)		% wgt vapors at T_{LX}	Controlled VOC Emissions L_S (lb/yr)	L_W (lb/yr)	Total (lb/yr)
531.39	556.52	1,087.91	**VOC**	100.00	10.63	11.13	21.76
			Benzene	15.959	1.70	1.78	3.47
			Biphenyl	0.834	0.09	0.09	0.18
			m-Cresol	0.922	0.10	0.10	0.20
			o-Cresol	1.247	0.13	0.14	0.27
			p-Cresol	0.764	0.08	0.09	0.17
			Cumene				
			Dibenzofuran	0.170	0.02	0.02	0.04
			Ethylbenzene				
			Naphthalene	32.816	3.49	3.65	7.14
			Phenol	0.532	0.06	0.06	0.12
			Quinoline	0.977	0.10	0.11	0.21
			Styrene	0.967	0.10	0.11	0.21
			Toluene	10.869	1.16	1.21	2.36
			m-Xylene	2.416	0.26	0.27	0.53
			o-Xylene	1.514	0.16	0.17	0.33
			p-Xylene	2.492	0.26	0.28	0.54
			Acenaphthene	1.323	0.14	0.15	0.29
			Acenaphthylene	0.991	0.11	0.11	0.22
			Anthracene	0.024	0.00	0.00	0.01
			Benzo(a)anthracene	0.000	0.00	0.00	0.00
			Benzo(b)fluoranthene	0.000	0.00	0.00	0.00
			Benzo(k)fluoranthene	0.000	0.00	0.00	0.00
			Benzo(g,h,i)perylene	0.000	0.00	0.00	0.00
			Benzo(a)pyrene	0.000	0.00	0.00	0.00
			Chrysene	0.000	0.00	0.00	0.00
			Dibenzo(a,h)anthracene	0.000	0.00	0.00	0.00
			Fluoranthene	0.026	0.00	0.00	0.01
			Fluorene	0.398	0.04	0.04	0.09
			Indeno(1,2,3-cd)pyrene				
			Phenanthrene	0.088	0.01	0.01	0.02
			Pyrene	0.002	0.00	0.00	0.00

Table 5-10. 2018 Potential Emissions Inventory, Petro Distillate Storage Tanks Emission Calculations
Koppers Inc., Follansbee Tar Plant, Follansbee, West Virginia
Note: Emissions were estimated using methodology outlined in AP-42, Section 7.1, Organic Liquid Storage Tanks, 11/06

Tank ID	Contents	Control Device	% Control	Throughput (gal)	No. Days in Service	Temp °F	D (ft)	Hs (ft)	H_L (ft)	V (gal)	Turn overs	Heat (Y/N)	DP_B (psia)	a	b	T_{LA} (R)	Mv (lb/mol)	Pva (psia)	Taa (R)	Tax (R)	Tan (R)	DT_A (R)	Tsa (R)	Tsx (R)	Tsn (R)	DTs (R)	T_{LX} (R)	T_{LN} (R)	P_{LX} (psia)	P_{LN} (psia)	DP_V (psia)	Vv (ft³)	H_{VO} (ft)	T_B (R)	Wv lb/ft³	K_E	DT_v (R)	K_S	Turnover Factor
Tank 221	Petro Distillate	Flare or TO	98	1,838,571	365	200	16.0	36.0	18.0	54,146	34.0	Y		0.89	1,203	659.44	110.92 at T_{LA}	0.1147 at T_{LA}	510.25	519.8	500.7	19.1	660	670	650	20	670	650	0.1447 at T_{LX}	0.0927 at T_{LN}	0.0520	3,653	18.17	659.00	0.0018	0.025	14.4	0.901	1.000

Uncontrolled VOC Emissions L_S (lb/yr)	L_W (lb/yr)	Total (lb/yr)		% wgt vapors at T_{LA}	Controlled VOC Emissions L_S (lb/yr)	L_W (lb/yr)	Total (lb/yr)
54.81	556.52	611.33	VOC	100.00	1.10	11.13	12.23
			Benzene	15.959	0.17	1.78	1.95
			Biphenyl	0.834	0.01	0.09	0.10
			m-Cresol	0.922	0.01	0.10	0.11
			o-Cresol	1.247	0.01	0.14	0.15
			p-Cresol	0.764	0.01	0.09	0.09
			Cumene				
			Dibenzofuran	0.170	0.00	0.02	0.02
			Ethylbenzene				
			Naphthalene	32.816	0.36	3.65	4.01
			Phenol	0.532	0.01	0.06	0.07
			Quinoline	0.977	0.01	0.11	0.12
			Styrene	0.967	0.01	0.11	0.12
			Toluene	10.869	0.12	1.21	1.33
			m-Xylene	2.416	0.03	0.27	0.30
			o-Xylene	1.514	0.02	0.17	0.19
			p-Xylene	2.492	0.03	0.28	0.30
			Acenaphthene	1.323	0.01	0.15	0.16
			Acenaphthylene	0.991	0.01	0.11	0.12
			Anthracene	0.024	0.00	0.00	0.00
			Benzo(a)anthracene	0.000	0.00	0.00	0.00
			Benzo(b)fluoranthene	0.000	0.00	0.00	0.00
			Benzo(k)fluoranthene	0.000	0.00	0.00	0.00
			Benzo(g,h,i)perylene	0.000	0.00	0.00	0.00
			Benzo(a)pyrene	0.000	0.00	0.00	0.00
			Chrysene	0.000	0.00	0.00	0.00
			Dibenzo(a,h)anthracene	0.000	0.00	0.00	0.00
			Fluoranthene	0.026	0.00	0.00	0.00
			Fluorene	0.398	0.00	0.04	0.05
			Indeno(1,2,3-cd)pyrene				
			Phenanthrene	0.088	0.00	0.01	0.01
			Pyrene	0.002	0.00	0.00	0.00

Tank ID	Contents	Control Device	% Control	Throughput (gal)	No. Days in Service	Temp °F	D (ft)	Hs (ft)	H_L (ft)	V (gal)	Turn overs	Heat (Y/N)	DP_B (psia)	a	b	T_{LA} (R)	Mv (lb/mol)	Pva (psia)	Taa (R)	Tax (R)	Tan (R)	DT_A (R)	Tsa (R)	Tsx (R)	Tsn (R)	DTs (R)	T_{LX} (R)	T_{LN} (R)	P_{LX} (psia)	P_{LN} (psia)	DP_V (psia)	Vv (ft³)	H_{VO} (ft)	T_B (R)	Wv lb/ft³	K_E	DT_v (R)	K_S	Turnover Factor
Tank 222	Petro Distillate	Flare or TO	98	1,838,571	365	200	16.0	36.0	18.0	54,146	34.0	Y		0.89	1,203	659.44	110.92 at T_{LA}	0.1147 at T_{LA}	510.25	519.8	500.7	19.1	660	670	650	20	670	650	0.1447 at T_{LX}	0.0927 at T_{LN}	0.0520	3,653	18.17	659.00	0.0018	0.025	14.4	0.901	1.000

Uncontrolled VOC Emissions L_S (lb/yr)	L_W (lb/yr)	Total (lb/yr)		% wgt vapors at T_{LA}	Controlled VOC Emissions L_S (lb/yr)	L_W (lb/yr)	Total (lb/yr)
54.81	556.52	611.33	VOC	100.00	1.10	11.13	12.23
			Benzene	15.959	0.17	1.78	1.95
			Biphenyl	0.834	0.01	0.09	0.10
			m-Cresol	0.922	0.01	0.10	0.11
			o-Cresol	1.247	0.01	0.14	0.15
			p-Cresol	0.764	0.01	0.09	0.09
			Cumene				
			Dibenzofuran	0.170	0.00	0.02	0.02
			Ethylbenzene				
			Naphthalene	32.816	0.36	3.65	4.01
			Phenol	0.532	0.01	0.06	0.07
			Quinoline	0.977	0.01	0.11	0.12
			Styrene	0.967	0.01	0.11	0.12
			Toluene	10.869	0.12	1.21	1.33
			m-Xylene	2.416	0.03	0.27	0.30
			o-Xylene	1.514	0.02	0.17	0.19
			p-Xylene	2.492	0.03	0.28	0.30
			Acenaphthene	1.323	0.01	0.15	0.16
			Acenaphthylene	0.991	0.01	0.11	0.12
			Anthracene	0.024	0.00	0.00	0.00
			Benzo(a)anthracene	0.000	0.00	0.00	0.00
			Benzo(b)fluoranthene	0.000	0.00	0.00	0.00
			Benzo(k)fluoranthene	0.000	0.00	0.00	0.00
			Benzo(g,h,i)perylene	0.000	0.00	0.00	0.00
			Benzo(a)pyrene	0.000	0.00	0.00	0.00
			Chrysene	0.000	0.00	0.00	0.00
			Dibenzo(a,h)anthracene	0.000	0.00	0.00	0.00
			Fluoranthene	0.026	0.00	0.00	0.00
			Fluorene	0.398	0.00	0.04	0.05
			Indeno(1,2,3-cd)pyrene				
			Phenanthrene	0.088	0.00	0.01	0.01
			Pyrene	0.002	0.00	0.00	0.00

Table 5-10. 2018 Potential Emissions Inventory. Petro Distillate Storage Tanks Emission Calculations
Koppers Inc., Follansbee Tar Plant, Follansbee, West Virginia

Note: Emissions were estimated using methodologies outlined in AP-42, Section 7.1, Organic Liquid Storage Tanks.11/06

Tank ID	Contents	Control Device	% Control	Throughput (gal)	No. Days in Service	Temp °F	D (ft)	Hs (ft)	H_L (ft)	V (gal)	Turn overs	Heat (Y/N)	DP_B (psia)	a	b	T_{LA} (R)	Mv (lb/mol)	Pva (psia)	Taa (R)	Tax (R)	Tan (R)	DT_A (R)	Tsa (R)	Tsx (R)	Tsn (R)	DTs (R)	T_{LX} (R)	T_{LN} (R)	P_{LX} (psia)	P_{LN} (psia)	DP_V (psia)	Vv (ft³)	H_{VO} (ft)	T_B (R)	Wv lb/ft³	K_E	DT_v (R)	K_S	Turnover Factor
Tank 223	Petro Distillate	Flare or TO	98	1,838,571	365	200	16.0	36.0	18.0	54.146	34.0	Y		0.89	1,203	659.44	110.92 at T_{LX}	0.1447 at T_{LX}	510.25	519.8	500.7	19.1	660	670	650	20	670	650	0.1447 at T_{LX}	0.0927 at T_{LN}	0.0520	3,653	18.17	659.00	0.0018	0.025	14.4	0.901	1.000

Uncontrolled VOC Emissions L_S (lb/yr)	L_W (lb/yr)	Total (lb/yr)		% wgt vapors at T_{LX}	Controlled VOC Emissions L_S (lb/yr)	L_W (lb/yr)	Total (lb/yr)
54.81	556.52	611.33	**VOC**	100.00	1.10	11.13	12.23
			Benzene	15.959	0.17	1.78	1.95
			Biphenyl	0.834	0.01	0.09	0.10
			m-Cresol	0.922	0.01	0.10	0.11
			o-Cresol	1.247	0.01	0.14	0.15
			p-Cresol	0.764	0.01	0.09	0.09
			Cumene				
			Dibenzofuran	0.170	0.00	0.02	0.02
			Ethylbenzene				
			Naphthalene	32.816	0.36	3.65	4.01
			Phenol	0.532	0.01	0.06	0.07
			Quinoline	0.977	0.01	0.11	0.12
			Styrene	0.967	0.01	0.11	0.12
			Toluene	10.869	0.12	1.21	1.33
			m-Xylene	2.416	0.03	0.27	0.30
			o-Xylene	1.514	0.02	0.17	0.19
			p-Xylene	2.492	0.03	0.28	0.30
			Acenaphthene	1.323	0.01	0.15	0.16
			Acenaphthylene	0.991	0.01	0.11	0.12
			Anthracene	0.024	0.00	0.00	0.00
			Benzo(a)anthracene	0.000	0.00	0.00	0.00
			Benzo(b)fluoranthene	0.000	0.00	0.00	0.00
			Benzo(k)fluoranthene	0.000	0.00	0.00	0.00
			Benzo(g,h,i)perylene	0.000	0.00	0.00	0.00
			Benzo(a)pyrene	0.000	0.00	0.00	0.00
			Chrysene	0.000	0.00	0.00	0.00
			Dibenzo(a,h)anthracene	0.000	0.00	0.00	0.00
			Fluoranthene	0.026	0.00	0.00	0.00
			Fluorene	0.398	0.00	0.04	0.05
			Indeno(1,2,3-cd)pyrene				
			Phenanthrene	0.088	0.00	0.01	0.01
			Pyrene	0.002	0.00	0.00	0.00

Tank ID	Contents	Control Device	% Control	Throughput (gal)	No. Days in Service	Temp °F	D (ft)	Hs (ft)	H_L (ft)	V (gal)	Turn overs	Heat (Y/N)	DP_B (psia)	a	b	T_{LA} (R)	Mv (lb/mol)	Pva (psia)	Taa (R)	Tax (R)	Tan (R)	DT_A (R)	Tsa (R)	Tsx (R)	Tsn (R)	DTs (R)	T_{LX} (R)	T_{LN} (R)	P_{LX} (psia)	P_{LN} (psia)	DP_V (psia)	Vv (ft³)	H_{VO} (ft)	T_B (R)	Wv lb/ft³	K_E	DT_v (R)	K_S	Turnover Factor
Tank 224	Petro Distillate	Flare or TO	98	1,838,571	365	200	16.0	36.0	18.0	54.146	34.0	Y		0.89	1,203	659.44	110.92 at T_{LX}	0.1447 at T_{LX}	510.25	519.8	500.7	19.1	660	670	650	20	670	650	0.1447 at T_{LX}	0.0927 at T_{LN}	0.0520	3,653	18.17	659.00	0.0018	0.025	14.4	0.901	1.000

Uncontrolled VOC Emissions L_S (lb/yr)	L_W (lb/yr)	Total (lb/yr)		% wgt vapors at T_{LX}	Controlled VOC Emissions L_S (lb/yr)	L_W (lb/yr)	Total (lb/yr)
54.81	556.52	611.33	**VOC**	100.00	1.10	11.13	12.23
			Benzene	15.959	0.17	1.78	1.95
			Biphenyl	0.834	0.01	0.09	0.10
			m-Cresol	0.922	0.01	0.10	0.11
			o-Cresol	1.247	0.01	0.14	0.15
			p-Cresol	0.764	0.01	0.09	0.09
			Cumene				
			Dibenzofuran	0.170	0.00	0.02	0.02
			Ethylbenzene				
			Naphthalene	32.816	0.36	3.65	4.01
			Phenol	0.532	0.01	0.06	0.07
			Quinoline	0.977	0.01	0.11	0.12
			Styrene	0.967	0.01	0.11	0.12
			Toluene	10.869	0.12	1.21	1.33
			m-Xylene	2.416	0.03	0.27	0.30
			o-Xylene	1.514	0.02	0.17	0.19
			p-Xylene	2.492	0.03	0.28	0.30
			Acenaphthene	1.323	0.01	0.15	0.16
			Acenaphthylene	0.991	0.01	0.11	0.12
			Anthracene	0.024	0.00	0.00	0.00
			Benzo(a)anthracene	0.000	0.00	0.00	0.00
			Benzo(b)fluoranthene	0.000	0.00	0.00	0.00
			Benzo(k)fluoranthene	0.000	0.00	0.00	0.00
			Benzo(g,h,i)perylene	0.000	0.00	0.00	0.00
			Benzo(a)pyrene	0.000	0.00	0.00	0.00
			Chrysene	0.000	0.00	0.00	0.00
			Dibenzo(a,h)anthracene	0.000	0.00	0.00	0.00
			Fluoranthene	0.026	0.00	0.00	0.00
			Fluorene	0.398	0.00	0.04	0.05
			Indeno(1,2,3-cd)pyrene				
			Phenanthrene	0.088	0.00	0.01	0.01
			Pyrene	0.002	0.00	0.00	0.00

Table 5-10. 2018 Potential Emissions Inventory, Petro Distillate Storage Tanks Emission Calculations
Koppers Inc., Follansbee Tar Plant, Follansbee, West Virginia
Note: Emissions were estimated using methodology outlined in AP-42, Section 7.1, Organic Liquid Storage Tanks, 11/06

Tank ID	Contents	Control Device	% Control	Throughput (gal)	No. Days in Service	Temp °F	D (ft)	Hs (ft)	H_L (ft)	V (gal)	Turn overs	Heat (Y/N)	DP_B (psia)	a	I	T_{LA} (R)	Mv (lb/mol)	Pva (psia)	Taa (R)	Tax (R)	Tan (R)	DT_A (R)	Tsa (R)	Tsx (R)	Tsn (R)	DTs (R)	T_{LX} (R)	T_{LN} (R)	P_{LX} (psia)	P_{LN} (psia)	DP_V (psia)	Vv (ft^3)	H_{VO} (ft)	T_B (R)	Wv lb/ft^3	K_E	DT_v (R)	K_S	Turnover Factor
Tank 10	Petro Distillate	Flare or TO	98	1,838,571	365	200	22.0	35.0	17.5	99,525	18.5	Y		0.89	1.203	659.44	110.92 at T_{LX}	0.1147 at T_{LX}	510.25	519.8	500.7	19.1	660	670	650	20	670	650	0.1447 at T_{LX}	0.0927 at T_{LN}	0.0520	6,739	17.73	659.00	0.0018	0.025	14.4	0.903	1.000

Uncontrolled VOC Emissions L_S (lb/yr)	L_W (lb/yr)	Total (lb/yr)		% wgt vapors at T_{LX}	Controlled VOC Emissions L_S (lb/yr)	L_W (lb/yr)	Total (lb/yr)
101.37	556.52	657.89	**VOC**	100.00	2.03	11.13	13.16
			Benzene	15.959	0.32	1.78	2.10
			Biphenyl	0.834	0.02	0.09	0.11
			m-Cresol	0.922	0.02	0.10	0.12
			o-Cresol	1.247	0.03	0.14	0.16
			p-Cresol	0.764	0.02	0.09	0.10
			Cumene				
			Dibenzofuran	0.170	0.00	0.02	0.02
			Ethylbenzene				
			Naphthalene	32.816	0.67	3.65	4.32
			Phenol	0.532	0.01	0.06	0.07
			Quinoline	0.977	0.02	0.11	0.13
			Styrene	0.967	0.02	0.11	0.13
			Toluene	10.869	0.22	1.21	1.43
			m-Xylene	2.416	0.05	0.27	0.32
			o-Xylene	1.514	0.03	0.17	0.20
			p-Xylene	2.492	0.05	0.28	0.33
			Acenaphthene	1.323	0.03	0.15	0.17
			Acenaphthylene	0.991	0.02	0.11	0.13
			Anthracene	0.024	0.00	0.00	0.00
			Benzo(a)anthracene	0.000	0.00	0.00	0.00
			Benzo(b)fluoranthene	0.000	0.00	0.00	0.00
			Benzo(k)fluoranthene	0.000	0.00	0.00	0.00
			Benzo(g,h,i)perylene	0.000	0.00	0.00	0.00
			Benzo(a)pyrene	0.000	0.00	0.00	0.00
			Chrysene	0.000	0.00	0.00	0.00
			Dibenzo(a,h)anthracene	0.000	0.00	0.00	0.00
			Fluoranthene	0.026	0.00	0.00	0.00
			Fluorene	0.398	0.01	0.04	0.05
			Indeno(1,2,3-cd)pyrene				
			Phenanthrene	0.088	0.00	0.01	0.01
			Pyrene	0.002	0.00	0.00	0.00

Table 5-11.

2018 Potential Emissions Inventory, Petro Pitch Storage Tanks
Koppers Inc., Follansbee Tar Plant, Follansbee, West Virginia
Note: Emissions were estimated using methodology outlined in AP-42, Section 7.1, Organic Liquid Storage Tanks, 11/06

Tank ID	Contents	Control Device	% Control	Throughput (gal)	No. Days in Service	Temp °F	D (ft)	Hs (ft)	H_L (ft)	V (gal)	Turn overs	Heat (Y/N)	DP_B (psia)	α	I	T_{LA} (R)	Mv (lb/mol)	Pva (psia)	Taa (R)	Tax (R)	Tan (R)	DT_A (R)	Tsa (R)	Tsx (R)	Tsn (R)	DTs (R)	T_{LX} (R)	T_{LN} (R)	P_{TX} (psia)	P_{TN} (psia)	DP_V (psia)	Vv (ft³)	H_{VO} (ft)	T_B (R)	Wv lb/ft³	K_E	DT_v (R)	K_S	Turnover Factor
Tank 801	Petroleum Pitch	Scrubber E	80	1,925,000	365	500	26.0	16.0	8.0	63,546	30.3	Y		0.89	1,203	959.44	162.94 at T_{LX}	0.1381 at T_{LX}	510.25	519.8	500.7	19.1	960	970	950	20	970	950	0.1603 at T_{LX}	0.1206 at T_{LX}	0.0397	4,391	8.27	959.00	0.0022	0.018	14.4	0.943	1.000

Uncontrolled VOC Emissions L_S (lb/yr)	L_W (lb/yr)	Total (lb/yr)		% wgt vapors at T_{LX}	Controlled VOC Emissions L_S (lb/yr)	L_W (lb/yr)	Total (lb/yr)
58.60	1,031.27	1,089.87	**VOC**	100.00	11.72	206.25	217.97
			Benzene				
			Biphenyl				
			m-Cresol				
			o-Cresol				
			p-Cresol				
			Cumene				
			Dibenzofuran				
			Ethylbenzene				
			Naphthalene				
			Phenol				
			Quinoline				
			Styrene				
			Toluene				
			m-Xylene				
			o-Xylene				
			p-Xylene				
			Acenaphthene	55.590	6.51	114.66	121.17
			Acenaphthylene				
			Anthracene	4.635	0.54	9.56	10.10
			Benzo(a)anthracene	0.268	0.03	0.55	0.58
			Benzo(b)fluoranthene	0.025	0.00	0.05	0.05
			Benzo(k)fluoranthene	0.003	0.00	0.01	0.01
			Benzo(g,h,i)perylene				
			Benzo(a)pyrene	0.028	0.00	0.06	0.06
			Chrysene	0.095	0.01	0.20	0.21
			Dibenzo(a,h)anthracene				
			Fluoranthene	3.344	0.39	6.90	7.29
			Fluorene	20.623	2.42	42.54	44.95
			Indeno(1,2,3-cd)pyrene				
			Phenanthrene	13.223	1.55	27.27	28.82
			Pyrene	2.115	0.25	4.36	4.61

Tank ID	Contents	Control Device	% Control	Throughput (gal)	No. Days in Service	Temp °F	D (ft)	Hs (ft)	H_L (ft)	V (gal)	Turn overs	Heat (Y/N)	DP_B (psia)	α	I	T_{LA} (R)	Mv (lb/mol)	Pva (psia)	Taa (R)	Tax (R)	Tan (R)	DT_A (R)	Tsa (R)	Tsx (R)	Tsn (R)	DTs (R)	T_{LX} (R)	T_{LN} (R)	P_{TX} (psia)	P_{TN} (psia)	DP_V (psia)	Vv (ft³)	H_{VO} (ft)	T_B (R)	Wv lb/ft³	K_E	DT_v (R)	K_S	Turnover Factor
Tank 802	Petroleum Pitch	Scrubber E	80	1,925,000	365	500	26.0	16.0	8.0	63,546	30.3	Y		0.89	1,203	959.44	162.94 at T_{LX}	0.1381 at T_{LX}	510.25	519.8	500.7	19.1	960	970	950	20	970	950	0.1603 at T_{LX}	0.1206 at T_{LX}	0.0397	4,391	8.27	959.00	0.0022	0.018	14.4	0.943	1.000

Uncontrolled VOC Emissions L_S (lb/yr)	L_W (lb/yr)	Total (lb/yr)		% wgt vapors at T_{LX}	Controlled VOC Emissions L_S (lb/yr)	L_W (lb/yr)	Total (lb/yr)
58.60	1,031.27	1,089.87	**VOC**	100.00	11.72	206.25	217.97
			Benzene				
			Biphenyl				
			m-Cresol				
			o-Cresol				
			p-Cresol				
			Cumene				
			Dibenzofuran				
			Ethylbenzene				
			Naphthalene				
			Phenol				
			Quinoline				
			Styrene				
			Toluene				
			m-Xylene				
			o-Xylene				
			p-Xylene				
			Acenaphthene	55.590	6.51	114.66	121.17
			Acenaphthylene				
			Anthracene	4.635	0.54	9.56	10.10
			Benzo(a)anthracene	0.268	0.03	0.55	0.58
			Benzo(b)fluoranthene	0.025	0.00	0.05	0.05
			Benzo(k)fluoranthene	0.003	0.00	0.01	0.01
			Benzo(g,h,i)perylene				
			Benzo(a)pyrene	0.028	0.00	0.06	0.06
			Chrysene	0.095	0.01	0.20	0.21
			Dibenzo(a,h)anthracene				
			Fluoranthene	3.344	0.39	6.90	7.29
			Fluorene	20.623	2.42	42.54	44.95
			Indeno(1,2,3-cd)pyrene				
			Phenanthrene	13.223	1.55	27.27	28.82
			Pyrene	2.115	0.25	4.36	4.61

Table 5-11. 2018 Potential Emissions Inventory, Petro Pitch Storage Tanks
Koppers Inc., Follansbee Tar Plant, Follansbee, West Virginia
Note: Emissions were estimated using methodology outlined in AP-42, Section 7.1, Organic Liquid Storage Tanks, 11/06

Tank ID	Contents	Control Device	% Control	Throughput (gal)	No. Days in Service	Temp °F	D (ft)	Hs (ft)	H_K (ft)	V (gal)	Turn overs	Heat (Y/N)	DP_B (psia)	a	j	T_{LA} (R)	Mv (lb/mol)	Pva (psia)	Taa (R)	Tax (R)	Tan (R)	DT_A (R)	Tsa (R)	Tsx (R)	Tsn (R)	DTs (R)	T_{LX} (R)	T_{LN} (R)	P_{LX} (psia)	P_{LN} (psia)	DP_V (psia)	Vv (ft³)	H_{VO} (ft)	T_B (R)	Wv lb/ft³	K_E	DT_v (R)	K_S	Turnover Factor
Tank 804	Petroleum Pitch	Scrubber E	80	1,925,000	365	500	23.0	18.0	9.0	55.943	34.4	Y	0.89	1,203		959.44	162.94 at T_{LX}	0.1381 at T_{LX}	510.25	519.8	500.7	19.1	960	970	950	20	970	950	0.1603 at T_{LX}	0.1206 at T_{LN}	0.0397	3,839	9.24	959.00	0.0022	0.018	14.4	0.937	1.000

Uncontrolled VOC Emissions L_S (lb/yr)	L_W (lb/yr)	Total (lb/yr)		% wgt vapors at T_{LX}	Controlled VOC Emissions L_S (lb/yr)	L_W (lb/yr)	Total (lb/yr)
50.89	1,031.27	1,082.16	VOC	100.00	10.18	206.25	216.43
			Benzene				
			Biphenyl				
			m-Cresol				
			o-Cresol				
			p-Cresol				
			Cumene				
			Dibenzofuran				
			Ethylbenzene				
			Naphthalene				
			Phenol				
			Quinoline				
			Styrene				
			Toluene				
			m-Xylene				
			o-Xylene				
			p-Xylene				
			Acenaphthene	55.590	5.66	114.66	120.32
			Acenaphthylene				
			Anthracene	4.635	0.47	9.56	10.03
			Benzo(a)anthracene	0.268	0.03	0.55	0.58
			Benzo(b)fluoranthene	0.025	0.00	0.05	0.05
			Benzo(k)fluoranthene	0.003	0.00	0.01	0.01
			Benzo(g,h,i)perylene				
			Benzo(a)pyrene	0.028	0.00	0.06	0.06
			Chrysene	0.095	0.01	0.20	0.20
			Dibenzo(a,h)anthracene				
			Fluoranthene	3.344	0.34	6.90	7.24
			Fluorene	20.623	2.10	42.54	44.64
			Indeno(1,2,3-cd)pyrene				
			Phenanthrene	13.223	1.35	27.27	28.62
			Pyrene	2.115	0.22	4.36	4.58

Tank	Contents	Control Device	% Control	Throughput (gal)	No. Days in Service	Temp °F	D (ft)	Hs (ft)	H_K (ft)	V (gal)	Turn overs	Heat (Y/N)	DP_B (psia)	a	j	T_{LA} (R)	Mv (lb/mol)	Pva (psia)	Taa (R)	Tax (R)	Tan (R)	DT_A (R)	Tsa (R)	Tsx (R)	Tsn (R)	DTs (R)	T_{LX} (R)	T_{LN} (R)	P_{LX} (psia)	P_{LN} (psia)	DP_V (psia)	Vv (ft³)	H_{VO} (ft)	T_B (R)	Wv lb/ft³	K_E	DT_v (R)	K_S	Turnover Factor
Tank 805	Petroleum Pitch	Scrubber E	80	1,925,000	365	500	18.0	18.0	9.0	34.264	56.2	Y	0.89	1,203		959.44	162.94 at T_{LX}	0.1381 at T_{LX}	510.25	519.8	500.7	19.1	960	970	950	20	970	950	0.1603 at T_{LX}	0.1206 at T_{LN}	0.0397	2,338	9.19	959.00	0.0022	0.018	14.4	0.937	1.000

Uncontrolled VOC Emissions L_S (lb/yr)	L_W (lb/yr)	Total (lb/yr)		% wgt vapors at T_{LX}	Controlled VOC Emissions L_S (lb/yr)	L_W (lb/yr)	Total (lb/yr)
31.00	1,031.27	1,062.27	VOC	100.00	6.20	206.25	212.45
			Benzene				
			Biphenyl				
			m-Cresol				
			o-Cresol				
			p-Cresol				
			Cumene				
			Dibenzofuran				
			Ethylbenzene				
			Naphthalene				
			Phenol				
			Quinoline				
			Styrene				
			Toluene				
			m-Xylene				
			o-Xylene				
			p-Xylene				
			Acenaphthene	55.590	3.45	114.66	118.10
			Acenaphthylene				
			Anthracene	4.635	0.29	9.56	9.85
			Benzo(a)anthracene	0.268	0.02	0.55	0.57
			Benzo(b)fluoranthene	0.025	0.00	0.05	0.05
			Benzo(k)fluoranthene	0.003	0.00	0.01	0.01
			Benzo(g,h,i)perylene				
			Benzo(a)pyrene	0.028	0.00	0.06	0.06
			Chrysene	0.095	0.01	0.20	0.20
			Dibenzo(a,h)anthracene				
			Fluoranthene	3.344	0.21	6.90	7.10
			Fluorene	20.623	1.28	42.54	43.82
			Indeno(1,2,3-cd)pyrene				
			Phenanthrene	13.223	0.82	27.27	28.09
			Pyrene	2.115	0.13	4.36	4.49

Table 5-11. 2018 Potential Emissions Inventory, Petro Pitch Storage Tanks
Koppers Inc., Follansbee Tar Plant, Follansbee, West Virginia

Note: Emissions were estimated using methodology outlined in AP-42, Section 7.1, Organic Liquid Storage Tanks, 11/06

Tank ID	Contents	Control Device	% Control	Throughput (gal)	No. Days in Service	Temp °F	D (ft)	Hs (ft)	H_L (ft)	V (gal)	Turn overs	Heat (Y/N)	DP_B (psia)	a	I	T_{LA} (R)	Mv (lb/mol)	Pva (psia)	Taa (R)	Tax (R)	Tan (R)	DT_A (R)	Tsa (R)	Tsx (R)	Tsn (R)	DTs (R)	T_{LX} (R)	T_{LN} (R)	P_{TX} (psia)	P_{TN} (psia)	DP_V (psia)	Vv (ft³)	H_{VO} (ft)	T_B (R)	Wv lb/ft³	K_E	DT_v (R)	K_S	Turnover Factor
Tank 806	Petroleum Pitch	Scrubber E	80	1,925,000	365	500	23.0	21.0	10.5	65.267	29.5	Y		0.89	1,203	959.44	162.94 at T_{LA}	0.1381 at T_{LA}	510.25	519.8	500.7	19.1	960	970	950	20	970	950	0.1603 at T_{LX}	0.1206 at T_{LN}	0.0397	4.462	10.74	959.00	0.0022	0.018	14.4	0.927	1.000

Uncontrolled VOC Emissions L_S (lb/yr)	L_W (lb/yr)	Total (lb/yr)		% wgt vapors at T_{LA}	Controlled VOC Emissions L_S (lb/yr)	L_W (lb/yr)	Total (lb/yr)
58.54	1,031.27	1,089.82	**VOC**	100.00	11.71	206.25	217.96
			Benzene				
			Biphenyl				
			m-Cresol				
			o-Cresol				
			p-Cresol				
			Cumene				
			Dibenzofuran				
			Ethylbenzene				
			Naphthalene				
			Phenol				
			Quinoline				
			Styrene				
			Toluene				
			m-Xylene				
			o-Xylene				
			p-Xylene				
			Acenaphthene.	55.590	6.51	114.66	121.17
			Acenaphthylene				
			Anthracene	4.635	0.54	9.56	10.10
			Benzo(a)anthracene	0.268	0.03	0.55	0.58
			Benzo(b)fluoranthene	0.025	0.00	0.05	0.05
			Benzo(k)fluoranthene	0.003	0.00	0.01	0.01
			Benzo(g,h,i)perylene				
			Benzo(a)pyrene	0.028	0.00	0.06	0.06
			Chrysene	0.095	0.01	0.20	0.21
			Dibenzo(a,h)anthracene				
			Fluoranthene	3.344	0.39	6.90	7.29
			Fluorene	20.623	2.41	42.54	44.95
			Indeno(1,2,3-cd)pyrene				
			Phenanthrene	13.223	1.55	27.27	28.82
			Pyrene	2.115	0.25	4.36	4.61

Tank ID	Contents	Control Device	% Control	Throughput (gal)	No. Days in Service	Temp °F	D (ft)	Hs (ft)	H_L (ft)	V (gal)	Turn overs	Heat (Y/N)	DP_B (psia)	a	I	T_{LA} (R)	Mv (lb/mol)	Pva (psia)	Taa (R)	Tax (R)	Tan (R)	DT_A (R)	Tsa (R)	Tsx (R)	Tsn (R)	DTs (R)	T_{LX} (R)	T_{LN} (R)	P_{TX} (psia)	P_{TN} (psia)	DP_V (psia)	Vv (ft³)	H_{VO} (ft)	T_B (R)	Wv lb/ft³	K_E	DT_v (R)	K_S	Turnover Factor
Tank 808	Petroleum Pitch	Scrubber E	80	1,925,000	365	500	23.0	21.0	10.5	65.267	29.5	Y		0.89	1,203	959.44	162.94 at T_{LA}	0.1381 at T_{LA}	510.25	519.8	500.7	19.1	960	970	950	20	970	950	0.1603 at T_{LX}	0.1206 at T_{LN}	0.0397	4.462	10.74	959.00	0.0022	0.018	14.4	0.927	1.000

Uncontrolled VOC Emissions L_S (lb/yr)	L_W (lb/yr)	Total (lb/yr)		% wgt vapors at T_{LA}	Controlled VOC Emissions L_S (lb/yr)	L_W (lb/yr)	Total (lb/yr)
58.54	1,031.27	1,089.82	**VOC**	100.00	11.71	206.25	217.96
			Benzene				
			Biphenyl				
			m-Cresol				
			o-Cresol				
			p-Cresol				
			Cumene				
			Dibenzofuran				
			Ethylbenzene				
			Naphthalene				
			Phenol				
			Quinoline				
			Styrene				
			Toluene				
			m-Xylene				
			o-Xylene				
			p-Xylene				
			Acenaphthene	55.590	6.51	114.66	121.17
			Acenaphthylene				
			Anthracene	4.635	0.54	9.56	10.10
			Benzo(a)anthracene	0.268	0.03	0.55	0.58
			Benzo(b)fluoranthene	0.025	0.00	0.05	0.05
			Benzo(k)fluoranthene	0.003	0.00	0.01	0.01
			Benzo(g,h,i)perylene				
			Benzo(a)pyrene	0.028	0.00	0.06	0.06
			Chrysene	0.095	0.01	0.20	0.21
			Dibenzo(a,h)anthracene				
			Fluoranthene	3.344	0.39	6.90	7.29
			Fluorene	20.623	2.41	42.54	44.95
			Indeno(1,2,3-cd)pyrene				
			Phenanthrene	13.223	1.55	27.27	28.82
			Pyrene	2.115	0.25	4.36	4.61

Table 5-12. 2018 Potential Emissions Inventory, Decanted Oil Storage Tanks Emission Calculations
Koppers Inc., Follansbee Tar Plant, Follansbee, West Virginia
Note: Emissions were estimated using methodology outlined in AP-42, Section 7.1, Organic Liquid Storage Tanks, 11/06

Tank ID	Contents	Control Device	% Control	Throughput (gal)	No. Days in Service	Temp °F	D (ft)	Hs (ft)	H_L (ft)	V (gal)	Turn overs	Hcat (Y/N)	DP_B (psia)	a	f	T_{LA} (R)	Mv (lb/mol)	Pva (psia)	Taa (R)	Tax (R)	Tan (R)	DT_A (R)	Tsa (R)	Tsx (R)	Tsn (R)	DTs (R)	T_{LX} (R)	T_{LN} (R)	P_{LX} (psia)	P_{LN} (psia)	DP_V (psia)	Vv (ft³)	H_{VO} (ft)	T_B (R)	Wv lb/ft³	K_E	DT_v (R)	K_S	Turnover Factor
Tank 50	Decanted Oil	Flare or TO	98	15,000,000	365	250	72.0	35.0	17.5	1,065,991	14.1	Y	0.89	1,203		709.44	177.21 at T_{LX}	0.0588 at T_{LX}	510.25	519.8	500.7	19.1	710	720	700	20	720	700	0.0757 at T_{LX}	0.0466 at T_{LN}	0.0290	74,305	18.25	709.00	0.0014	0.022	14.4	0.946	1.000

Uncontrolled VOC Emissions L_S (lb/yr)	L_W (lb/yr)	Total (lb/yr)		% wgt vapors at T_{LX}	Controlled VOC Emissions L_S (lb/yr)	L_W (lb/yr)	Total (lb/yr)
782.52	3,719.90	4,502.42	**VOC**	100.00	15.65	74.40	90.05
			Benzene				
			Biphenyl				
			m-Cresol				
			o-Cresol				
			p-Cresol				
			Cumene				
			Dibenzofuran	0.063	0.01	0.05	0.06
			Ethylbenzene				
			Naphthalene	12.452	1.95	9.26	11.21
			Phenol				
			Quinoline				
			Styrene				
			Toluene				
			m-Xylene				
			o-Xylene				
			p-Xylene				
			Acenaphthene	0.183	0.03	0.14	0.16
			Acenaphthylene	0.142	0.02	0.11	0.13
			Anthracene	0.007	0.00	0.00	0.01
			Benzo(a)anthracene	0.002	0.00	0.00	0.00
			Benzo(b)fluoranthene	0.001	0.00	0.00	0.00
			Benzo(k)fluoranthene	0.000	0.00	0.00	0.00
			Benzo(g,h,i)perylene	0.000	0.00	0.00	0.00
			Benzo(a)pyrene	0.000	0.00	0.00	0.00
			Chrysene	0.000	0.00	0.00	0.00
			Dibenzo(a,h)anthracene	0.000	0.00	0.00	0.00
			Fluoranthene	0.028	0.00	0.02	0.02
			Fluorene	0.020	0.00	0.01	0.02
			Indeno(1,2,3-cd)pyrene	0.000	0.00	0.00	0.00
			Phenanthrene	0.045	0.01	0.03	0.04
			Pyrene	0.006	0.00	0.00	0.01

Tank ID	Contents	Control Device	% Control	Throughput (gal)	No. Days in Service	Temp °F	D (ft)	Hs (ft)	H_L (ft)	V (gal)	Turn overs	Hcat (Y/N)	DP_B (psia)	a	f	T_{LA} (R)	Mv (lb/mol)	Pva (psia)	Taa (R)	Tax (R)	Tan (R)	DT_A (R)	Tsa (R)	Tsx (R)	Tsn (R)	DTs (R)	T_{LX} (R)	T_{LN} (R)	P_{LX} (psia)	P_{LN} (psia)	DP_V (psia)	Vv (ft³)	H_{VO} (ft)	T_B (R)	Wv lb/ft³	K_E	DT_v (R)	K_S	Turnover Factor
Tank 6	Decanted Oil	Flare or TO	98	15,000,000	365	250	50.0	35.3	17.7	518,484	28.9	Y	0.89	1,203		709.44	177.21 at T_{LX}	0.0588 at T_{LX}	510.25	519.8	500.7	19.1	710	720	700	20	720	700	0.0757 at T_{LX}	0.0466 at T_{LN}	0.0290	35,678	18.17	709.00	0.0014	0.022	14.4	0.946	1.000

Uncontrolled VOC Emissions L_S (lb/yr)	L_W (lb/yr)	Total (lb/yr)		% wgt vapors at T_{LX}	Controlled VOC Emissions L_S (lb/yr)	L_W (lb/yr)	Total (lb/yr)
375.82	3,719.90	4,095.72	**VOC**	100.00	7.52	74.40	81.91
			Benzene				
			Biphenyl				
			m-Cresol				
			o-Cresol				
			p-Cresol				
			Cumene				
			Dibenzofuran	0.063	0.00	0.05	0.05
			Ethylbenzene				
			Naphthalene	12.452	0.94	9.26	10.20
			Phenol				
			Quinoline				
			Styrene				
			Toluene				
			m-Xylene				
			o-Xylene				
			p-Xylene				
			Acenaphthene	0.183	0.01	0.14	0.15
			Acenaphthylene	0.142	0.01	0.11	0.12
			Anthracene	0.007	0.00	0.00	0.01
			Benzo(a)anthracene	0.002	0.00	0.00	0.00
			Benzo(b)fluoranthene	0.001	0.00	0.00	0.00
			Benzo(k)fluoranthene	0.000	0.00	0.00	0.00
			Benzo(g,h,i)perylene	0.000	0.00	0.00	0.00
			Benzo(a)pyrene	0.000	0.00	0.00	0.00
			Chrysene	0.000	0.00	0.00	0.00
			Dibenzo(a,h)anthracene	0.000	0.00	0.00	0.00
			Fluoranthene	0.028	0.00	0.02	0.02
			Fluorene	0.020	0.00	0.01	0.02
			Indeno(1,2,3-cd)pyrene	0.000	0.00	0.00	0.00
			Phenanthrene	0.045	0.00	0.03	0.04
			Pyrene	0.006	0.00	0.00	0.00

Table 5-13.

2018 Potential Emissions Inventory, Decant Oil Distillate Storage Tanks Emission Calculations
Koppers Inc., Follansbee Tar Plant, Follansbee, West Virginia

Note: Emissions were estimated using methodology outlined in AP-42, Section 7.1, Organic Liquid Storage Tanks, 11/06

Tank ID	Contents	Control Device	% Control	Throughput (gal)	No. Days in Service	Temp °F	D (ft)	Hs (ft)	H_L (ft)	V (gal)	Turn overs	Heat (Y/N)	DP_B (psia)	a	I	T_{LA} (R)	Mv (lb/mol)	Pva (psia)	Taa (R)	Tax (R)	Tan (R)	DT_A (R)	Tsa (R)	Tsx (R)	Tsn (R)	DTs (R)	T_{LX} (R)	T_{LN} (R)	P_{LX} (psia)	P_{LN} (psia)	DP_V (psia)	Vv (ft³)	H_{VO} (ft)	T_B (R)	Wv lb/ft³	K_E	DT_v (R)	K_S	Turnover Factor
Tank 223	Decanted Oil Distillate	Flare or TO	98	6,150,000	365	200	16.0	36.0	18.0	54,146	113.6	Y		0.89	1.203	659.44	159.57 at T_{LA}	0.0199 at T_{LA}	510.25	519.8	500.7	19.1	660	670	650	20	670	650	0.0262 at T_{LX}	0.0155 at T_{LN}	0.0107	3.653	18.17	659.00	0.0004	0.023	14.4	0.981	1.000

Uncontrolled VOC Emissions L_S (lb/yr)	L_W (lb/yr)	Total (lb/yr)		% wgt vapors at T_{LA}	Controlled VOC Emissions L_S (lb/yr)	L_W (lb/yr)	Total (lb/yr)
13.25	464.96	478.21	**VOC**	100.00	0.26	9.30	9.56
			Benzene				
			Biphenyl	0.333	0.00	0.03	0.03
			m-Cresol	0.256	0.00	0.02	0.02
			o-Cresol	0.622	0.00	0.06	0.06
			p-Cresol	0.212	0.00	0.02	0.02
			Cumene				
			Dibenzofuran	0.087	0.00	0.01	0.01
			Ethylbenzene	6.948	0.02	0.65	0.66
			Naphthalene	5.983	0.02	0.56	0.57
			Phenol	0.253	0.00	0.02	0.02
			Quinoline	0.123	0.00	0.01	0.01
			Styrene				
			Toluene				
			m-Xylene	4.019	0.01	0.37	0.38
			o-Xylene	1.679	0.00	0.16	0.16
			p-Xylene	4.146	0.01	0.39	0.40
			Acenaphthene	0.236	0.00	0.02	0.02
			Acenaphthylene	0.362	0.00	0.03	0.03
			Anthracene	0.004	0.00	0.00	0.00
			Benzo(a)anthracene	0.001	0.00	0.00	0.00
			Benzo(b)fluoranthene	0.000	0.00	0.00	0.00
			Benzo(k)fluoranthene	0.000	0.00	0.00	0.00
			Benzo(g,h,i)perylene	0.000	0.00	0.00	0.00
			Benzo(a)pyrene	0.000	0.00	0.00	0.00
			Chrysene	0.000	0.00	0.00	0.00
			Dibenzo(a,h)anthracene	0.000	0.00	0.00	0.00
			Fluoranthene	0.017	0.00	0.00	0.00
			Fluorene	0.225	0.00	0.02	0.02
			Indeno(1,2,3-cd)pyrene	0.000	0.00	0.00	0.00
			Phenanthrene	0.027	0.00	0.00	0.00
			Pyrene	0.003	0.00	0.00	0.00

Tank ID	Contents	Control Device	% Control	Throughput (gal)	No. Days in Service	Temp °F	D (ft)	Hs (ft)	H_L (ft)	V (gal)	Turn overs	Heat (Y/N)	DP_B (psia)	a	I	T_{LA} (R)	Mv (lb/mol)	Pva (psia)	Taa (R)	Tax (R)	Tan (R)	DT_A (R)	Tsa (R)	Tsx (R)	Tsn (R)	DTs (R)	T_{LX} (R)	T_{LN} (R)	P_{LX} (psia)	P_{LN} (psia)	DP_V (psia)	Vv (ft³)	H_{VO} (ft)	T_B (R)	Wv lb/ft³	K_E	DT_v (R)	K_S	Turnover Factor
Tank 10	Decanted Oil Distillate	Flare or TO	98	6,150,000	365	200	22.0	35.0	17.5	99,525	61.8	Y		0.89	1.203	659.44	159.57 at T_{LA}	0.0199 at T_{LA}	510.25	519.8	500.7	19.1	660	670	650	20	670	650	0.0262 at T_{LX}	0.0155 at T_{LN}	0.0107	6.739	17.73	659.00	0.0004	0.023	14.4	0.982	1.000

Uncontrolled VOC Emissions L_S (lb/yr)	L_W (lb/yr)	Total (lb/yr)		% wgt vapors at T_{LA}	Controlled VOC Emissions L_S (lb/yr)	L_W (lb/yr)	Total (lb/yr)
24.46	464.96	489.42	**VOC**	100.00	0.49	9.30	9.79
			Benzene				
			Biphenyl	0.333	0.00	0.03	0.03
			m-Cresol	0.256	0.00	0.02	0.03
			o-Cresol	0.622	0.00	0.06	0.06
			p-Cresol	0.212	0.00	0.02	0.02
			Cumene				
			Dibenzofuran	0.087	0.00	0.01	0.01
			Ethylbenzene	6.948	0.03	0.65	0.68
			Naphthalene	5.983	0.03	0.56	0.59
			Phenol	0.253	0.00	0.02	0.02
			Quinoline	0.123	0.00	0.01	0.01
			Styrene				
			Toluene				
			m-Xylene	4.019	0.02	0.37	0.39
			o-Xylene	1.679	0.01	0.16	0.16
			p-Xylene	4.146	0.02	0.39	0.41
			Acenaphthene	0.236	0.00	0.02	0.02
			Acenaphthylene	0.362	0.00	0.03	0.04
			Anthracene	0.004	0.00	0.00	0.00
			Benzo(a)anthracene	0.001	0.00	0.00	0.00
			Benzo(b)fluoranthene	0.000	0.00	0.00	0.00
			Benzo(k)fluoranthene	0.000	0.00	0.00	0.00
			Benzo(g,h,i)perylene	0.000	0.00	0.00	0.00
			Benzo(a)pyrene	0.000	0.00	0.00	0.00
			Chrysene	0.000	0.00	0.00	0.00
			Dibenzo(a,h)anthracene	0.000	0.00	0.00	0.00
			Fluoranthene	0.017	0.00	0.00	0.00
			Fluorene	0.225	0.00	0.02	0.02
			Indeno(1,2,3-cd)pyrene	0.000	0.00	0.00	0.00
			Phenanthrene	0.027	0.00	0.00	0.00
			Pyrene	0.003	0.00	0.00	0.00

Table 5-14.

2018 Potential Emissions Inventory, Decant Pitch Storage Tanks
Koppers Inc., Follansbee Tar Plant, Follansbee, West Virginia

Note: Emissions were estimated using methodology outlined in AP-42, Section 7.1, Organic Liquid Storage Tanks, 11/06

Tank ID	Contents	Control Device	% Control	Throughput (gal)	No. Days in Service	Temp °F	D (ft)	Hs (ft)	H_L (ft)	V (gal)	Turn overs	Heat (Y/N)	DP_B (psia)	a	I	T_{LA} (R)	Mv (lb/mol)	Pva (psia)	T_{BR} (R)	T_{AX} (R)	T_{AN} (R)	DT_A (R)	T_{SR} (R)	T_{SX} (R)	T_{SN} (R)	DT_S (R)	T_{LX} (R)	T_{LN} (R)	P_{TX} (psia)	P_{TN} (psia)	DP_V (psia)	Vv (ft³)	H_{VO} (ft)	T_B (R)	Wv lb/ft³	K_E	DT_v (R)	K_S	Turnover Factor
Tank 801	Petro Pitch	Scrubber E	80	2,200,000	365	500	26.0	16.0	8.0	63,546	34.6	Y		0.89	1,203	959.44	162.94 at T_{LX}	0.1381 at T_{LX}	510.25	519.8	500.7	19.1	960	970	950	20	970	950	0.1603 at T_{LX}	0.1206 at T_{LN}	0.0397	4,391	8.27	959.00	0.0022	0.018	14.4	0.943	1.000

Uncontrolled VOC Emissions L_S (lb/yr)	L_W (lb/yr)	Total (lb/yr)		% wgt vapors at T_{LX}	Controlled VOC Emissions L_S (lb/yr)	L_W (lb/yr)	Total (lb/yr)
58.60	1,178.60	1,237.19	VOC	100.00	11.72	235.72	247.44
			Benzene				
			Biphenyl				
			m-Cresol				
			o-Cresol				
			p-Cresol				
			Cumene				
			Dibenzofuran				
			Ethylbenzene				
			Naphthalene				
			Phenol				
			Quinoline				
			Styrene				
			Toluene				
			m-Xylene				
			o-Xylene				
			p-Xylene				
			Acenaphthene	55.590	6.51	131.04	137.55
			Acenaphthylene				
			Anthracene	4.635	0.54	10.93	11.47
			Benzo(a)anthracene	0.268	0.03	0.63	0.66
			Benzo(b)fluoranthene	0.025	0.00	0.06	0.06
			Benzo(k)fluoranthene	0.003	0.00	0.01	0.01
			Benzo(g,h,i)perylene				
			Benzo(a)pyrene	0.028	0.00	0.06	0.07
			Chrysene	0.095	0.01	0.22	0.23
			Dibenzo(a,h)anthracene				
			Fluoranthene	3.344	0.39	7.88	8.27
			Fluorene	20.623	2.42	48.61	51.03
			Indeno(1,2,3-cd)pyrene				
			Phenanthrene	13.223	1.55	31.17	32.72
			Pyrene	2.115	0.25	4.99	5.23

Tank ID	Contents	Control Device	% Control	Throughput (gal)	No. Days in Service	Temp °F	D (ft)	Hs (ft)	H_L (ft)	V (gal)	Turn overs	Heat (Y/N)	DP_B (psia)	a	I	T_{LA} (R)	Mv (lb/mol)	Pva (psia)	T_{BR} (R)	T_{AX} (R)	T_{AN} (R)	DT_A (R)	T_{SR} (R)	T_{SX} (R)	T_{SN} (R)	DT_S (R)	T_{LX} (R)	T_{LN} (R)	P_{TX} (psia)	P_{TN} (psia)	DP_V (psia)	Vv (ft³)	H_{VO} (ft)	T_B (R)	Wv lb/ft³	K_E	DT_v (R)	K_S	Turnover Factor
Tank 802	Petro Pitch	Scrubber E	80	2,200,000	365	500	26.0	16.0	8.0	63,546	34.6	Y		0.89	1,203	959.44	162.94 at T_{LX}	0.1381 at T_{LX}	510.25	519.8	500.7	19.1	960	970	950	20	970	950	0.1603 at T_{LX}	0.1206 at T_{LN}	0.0397	4,391	8.27	959.00	0.0022	0.018	14.4	0.943	1.000

Uncontrolled VOC Emissions L_S (lb/yr)	L_W (lb/yr)	Total (lb/yr)		% wgt vapors at T_{LX}	Controlled VOC Emissions L_S (lb/yr)	L_W (lb/yr)	Total (lb/yr)
58.60	1,178.60	1,237.19	VOC	100.00	11.72	235.72	247.44
			Benzene				
			Biphenyl				
			m-Cresol				
			o-Cresol				
			p-Cresol				
			Cumene				
			Dibenzofuran				
			Ethylbenzene				
			Naphthalene				
			Phenol				
			Quinoline				
			Styrene				
			Toluene				
			m-Xylene				
			o-Xylene				
			p-Xylene				
			Acenaphthene	55.590	6.51	131.04	137.55
			Acenaphthylene				
			Anthracene	4.635	0.54	10.93	11.47
			Benzo(a)anthracene	0.268	0.03	0.63	0.66
			Benzo(b)fluoranthene	0.025	0.00	0.06	0.06
			Benzo(k)fluoranthene	0.003	0.00	0.01	0.01
			Benzo(g,h,i)perylene				
			Benzo(a)pyrene	0.028	0.00	0.06	0.07
			Chrysene	0.095	0.01	0.22	0.23
			Dibenzo(a,h)anthracene				
			Fluoranthene	3.344	0.39	7.88	8.27
			Fluorene	20.623	2.42	48.61	51.03
			Indeno(1,2,3-cd)pyrene				
			Phenanthrene	13.223	1.55	31.17	32.72
			Pyrene	2.115	0.25	4.99	5.23

Table 5-14. 2018 Potential Emissions Inventory, Decant Pitch Storage Tanks
Koppers Inc., Follansbee Tar Plant, Follansbee, West Virginia
Note: Emissions were estimated using methodology outlined in AP-42, Section 7.1, Organic Liquid Storage Tanks, 11/06

Tank ID	Contents	Control Device	% Control	Throughput (gal)	No. Days in Service	Temp °F	D (ft)	Hs (ft)	H_L (ft)	V (gal)	Turn overs	Heat (Y/N)	DP_B (psia)	a	I	T_{LA} (R)	Mv (lb/mol)	Pva (psia)	Taa (R)	Tax (R)	Tan (R)	DT_A (R)	Tsa (R)	Tsx (R)	Tsn (R)	DTs (R)	T_{LX} (R)	T_{LN} (R)	P_{LX} (psia)	P_{LN} (psia)	DP_V (psia)	Vv (ft³)	H_{VO} (ft)	T_B (R)	Wv lb/ft³	K_E	DT_v (R)	K_S	Turnover Factor
Tank 804	Petro Pitch	Scrubber E	80	2,200,000	365	500	23.0	18.0	9.0	55,943	39.3	Y	0.89	1,203		959.44	162.94 at T_{LX}	0.1381 at T_{LX}	510.25	519.8	500.7	19.1	960	970	950	20	970	950	0.1603 at T_{LX}	0.1206 at T_{LN}	0.0397	3.839	9.24	959.00	0.0022	0.018	14.4	0.937	1.000

Uncontrolled VOC Emissions L_S (lb/yr)	L_W (lb/yr)	Total (lb/yr)		% wgt vapors at T_{LA}	Controlled VOC Emissions L_S (lb/yr)	L_W (lb/yr)	Total (lb/yr)
50.89	1,178.60	1,229.48	**VOC**	100.00	10.18	235.72	245.90
			Benzene				
			Biphenyl				
			m-Cresol				
			o-Cresol				
			p-Cresol				
			Cumene				
			Dibenzofuran				
			Ethylbenzene				
			Naphthalene				
			Phenol				
			Quinoline				
			Styrene				
			Toluene				
			m-Xylene				
			o-Xylene				
			p-Xylene				
			Acenaphthene	55.590	5.66	131.04	136.69
			Acenaphthylene				
			Anthracene	4.635	0.47	10.93	11.40
			Benzo(a)anthracene	0.268	0.03	0.63	0.66
			Benzo(b)fluoranthene	0.025	0.00	0.06	0.06
			Benzo(k)fluoranthene	0.003	0.00	0.01	0.01
			Benzo(g,h,i)perylene				
			Benzo(a)pyrene	0.028	0.00	0.06	0.07
			Chrysene	0.095	0.01	0.22	0.23
			Dibenzo(a,h)anthracene				
			Fluoranthene	3.344	0.34	7.88	8.22
			Fluorene	20.623	2.10	48.61	50.71
			Indeno(1,2,3-cd)pyrene				
			Phenanthrene	13.223	1.35	31.17	32.52
			Pyrene	2.115	0.22	4.99	5.20

Tank ID	Contents	Control Device	% Control	Throughput (gal)	No. Days in Service	Temp °F	D (ft)	Hs (ft)	H_L (ft)	V (gal)	Turn overs	Heat (Y/N)	DP_B (psia)	a	I	T_{LA} (R)	Mv (lb/mol)	Pva (psia)	Taa (R)	Tax (R)	Tan (R)	DT_A (R)	Tsa (R)	Tsx (R)	Tsn (R)	DTs (R)	T_{LX} (R)	T_{LN} (R)	P_{LX} (psia)	P_{LN} (psia)	DP_V (psia)	Vv (ft³)	H_{VO} (ft)	T_B (R)	Wv lb/ft³	K_E	DT_v (R)	K_S	Turnover Factor
Tank 805	Petro Pitch	Scrubber E	80	2,200,000	365	500	18.0	18.0	9.0	34,264	64.2	Y	0.89	1,203		959.44	162.94 at T_{LX}	0.1381 at T_{LX}	510.25	519.8	500.7	19.1	960	970	950	20	970	950	0.1603 at T_{LX}	0.1206 at T_{LN}	0.0397	2.338	9.19	959.00	0.0022	0.018	14.4	0.937	1.000

Uncontrolled VOC Emissions L_S (lb/yr)	L_W (lb/yr)	Total (lb/yr)		% wgt vapors at T_{LA}	Controlled VOC Emissions L_S (lb/yr)	L_W (lb/yr)	Total (lb/yr)
31.00	1,178.60	1,209.60	**VOC**	100.00	6.20	235.72	241.92
			Benzene				
			Biphenyl				
			m-Cresol				
			o-Cresol				
			p-Cresol				
			Cumene				
			Dibenzofuran				
			Ethylbenzene				
			Naphthalene				
			Phenol				
			Quinoline				
			Styrene				
			Toluene				
			m-Xylene				
			o-Xylene				
			p-Xylene				
			Acenaphthene	55.590	3.45	131.04	134.48
			Acenaphthylene				
			Anthracene	4.635	0.29	10.93	11.21
			Benzo(a)anthracene	0.268	0.02	0.63	0.65
			Benzo(b)fluoranthene	0.025	0.00	0.06	0.06
			Benzo(k)fluoranthene	0.003	0.00	0.01	0.01
			Benzo(g,h,i)perylene				
			Benzo(a)pyrene	0.028	0.00	0.06	0.07
			Chrysene	0.095	0.01	0.22	0.23
			Dibenzo(a,h)anthracene				
			Fluoranthene	3.344	0.21	7.88	8.09
			Fluorene	20.623	1.28	48.61	49.89
			Indeno(1,2,3-cd)pyrene				
			Phenanthrene	13.223	0.82	31.17	31.99
			Pyrene	2.115	0.13	4.99	5.12

Table 5-14. 2018 Potential Emissions Inventory, Decant Pitch Storage Tanks
Koppers Inc., Follansbee Tar Plant, Follansbee, West Virginia
Note: Emissions were estimated using methodology outlined in AP-42, Section 7.1, Organic Liquid Storage Tanks, 11/06

Tank ID	Contents	Control Device	% Control	Throughput (gal)	No. Days in Service	Temp °F	D (ft)	Hs (ft)	H_L (ft)	V (gal)	Turn overs	Heat (Y/N)	DP_B (psia)	u	I	T_{LA} (R)	Mv (lb/mol)	Pva (psia)	Taa (R)	Tax (R)	Tan (R)	DT_A (R)	Tsa (R)	Tsx (R)	Tsn (R)	DTs (R)	T_{LX} (R)	T_{LN} (R)	P_{LX} (psia)	P_{LN} (psia)	DP_V (psia)	Vv (ft³)	H_{VO} (ft)	T_B (R)	Wv lb/ft³	K_E	DT_v (R)	K_S	Turnover Factor
Tank 806	Petro Pitch	Scrubber E	80	2,200,000	365	500	23.0	21.0	10.5	65.267	33.7	Y		0.89	1.203	959.44	162.94 at T_{LX}	0.1381 at T_{LX}	510.25	519.8	500.7	19.1	960	970	950	20	970	950	0.1603 at T_{LX}	0.1206 at T_{LX}	0.0397	4.462	10.74	959.00	0.0022	0.018	14.4	0.927	1.000

Uncontrolled VOC Emissions L_S (lb/yr)	L_W (lb/yr)	Total (lb/yr)		% wgt vapors at T_{LX}	Controlled VOC Emissions L_S (lb/yr)	L_W (lb/yr)	Total (lb/yr)
58.54	1,178.60	1,237.14	VOC	100.00	11.71	235.72	247.43
			Benzene				
			Biphenyl				
			m-Cresol				
			o-Cresol				
			p-Cresol				
			Cumene				
			Dibenzofuran				
			Ethylbenzene				
			Naphthalene				
			Phenol				
			Quinoline				
			Styrene				
			Toluene				
			m-Xylene				
			o-Xylene				
			p-Xylene				
			Acenaphthene	55.590	6.51	131.04	137.55
			Acenaphthylene				
			Anthracene	4.635	0.54	10.93	11.47
			Benzo(a)anthracene	0.268	0.03	0.63	0.66
			Benzo(b)fluoranthene	0.025	0.00	0.06	0.06
			Benzo(k)fluoranthene	0.003	0.00	0.01	0.01
			Benzo(g,h,i)perylene				
			Benzo(a)pyrene	0.028	0.00	0.06	0.07
			Chrysene	0.095	0.01	0.22	0.23
			Dibenzo(a,h)anthracene				
			Fluoranthene	3.344	0.39	7.88	8.27
			Fluorene	20.623	2.41	48.61	51.03
			Indeno(1,2,3-cd)pyrene				
			Phenanthrene	13.223	1.55	31.17	32.72
			Pyrene	2.115	0.25	4.99	5.23

Tank ID	Contents	Control Device	% Control	Throughput (gal)	No. Days in Service	Temp °F	D (ft)	Hs (ft)	H_L (ft)	V (gal)	Turn overs	Heat (Y/N)	DP_B (psia)	u	I	T_{LA} (R)	Mv (lb/mol)	Pva (psia)	Taa (R)	Tax (R)	Tan (R)	DT_A (R)	Tsa (R)	Tsx (R)	Tsn (R)	DTs (R)	T_{LX} (R)	T_{LN} (R)	P_{LX} (psia)	P_{LN} (psia)	DP_V (psia)	Vv (ft³)	H_{VO} (ft)	T_B (R)	Wv lb/ft³	K_E	DT_v (R)	K_S	Turnover Factor
Tank 808	Petro Pitch	Scrubber E	80	2,200,000	365	500	23.0	21.0	10.5	65.267	33.7	Y		0.89	1.203	959.44	162.94 at T_{LX}	0.1381 at T_{LX}	510.25	519.8	500.7	19.1	960	970	950	20	970	950	0.1603 at T_{LX}	0.1206 at T_{LX}	0.0397	4.462	10.74	959.00	0.0022	0.018	14.4	0.927	1.000

Uncontrolled VOC Emissions L_S (lb/yr)	L_W (lb/yr)	Total (lb/yr)		% wgt vapors at T_{LX}	Controlled VOC Emissions L_S (lb/yr)	L_W (lb/yr)	Total (lb/yr)
58.54	1,178.60	1,237.14	VOC	100.00	11.71	235.72	247.43
			Benzene				
			Biphenyl				
			m-Cresol				
			o-Cresol				
			p-Cresol				
			Cumene				
			Dibenzofuran				
			Ethylbenzene				
			Naphthalene				
			Phenol				
			Quinoline				
			Styrene				
			Toluene				
			m-Xylene				
			o-Xylene				
			p-Xylene				
			Acenaphthene	55.590	6.51	131.04	137.55
			Acenaphthylene				
			Anthracene	4.635	0.54	10.93	11.47
			Benzo(a)anthracene	0.268	0.03	0.63	0.66
			Benzo(b)fluoranthene	0.025	0.00	0.06	0.06
			Benzo(k)fluoranthene	0.003	0.00	0.01	0.01
			Benzo(g,h,i)perylene				
			Benzo(a)pyrene	0.028	0.00	0.06	0.07
			Chrysene	0.095	0.01	0.22	0.23
			Dibenzo(a,h)anthracene				
			Fluoranthene	3.344	0.39	7.88	8.27
			Fluorene	20.623	2.41	48.61	51.03
			Indeno(1,2,3-cd)pyrene				
			Phenanthrene	13.223	1.55	31.17	32.72
			Pyrene	2.115	0.25	4.99	5.23

Table 5-15.

2018 Potential Emissions Inventory, Liquid Fuel/Solvent Storage Tanks Emission Calculations
Koppers Inc., Follansbee Tar Plant, Follansbee, West Virginia

Note: Emissions were estimated using methodology outlined in AP-42, Section 7.1, Organic Liquid Storage Tanks, 11/06

Tank ID	Contents	Control Device	% Control	Throughput (gal)	No. Days in Service	Temp °F	D (ft)	Hs (ft)	H_L (ft)	V (gal)	Turn overs	Heat (Y/N)	DP_B (psia)	a	b	T_{LA} (R)	Mv (lb/mol)	Pva (psia)	T_{AB} (R)	T_{bx} (R)	T_{aw} (R)	DT_A (R)	Tsa (R)	Tsx (R)	Tsn (R)	DTs (R)	T_{LX} (R)	T_{LN} (R)	P_{LX} (psia) at T_{LX}	P_{LN} (psia) at T_{LN}	DP_V (psia)	Vv (ft³)	H_{VO} (ft)	T_B (R)	Wv lb/ft³	K_E	DT_v (R)	K_S	Turnover Factor
Tank 11	Liquid Fuel	Flare, Thermal Oxidizer	98	5,256,000	365	70	22.0	35.0	17.5	99,525	52.8	Y	0.89	1.203		529.44	115.90 at T_{LA}	0.0261 at T_{LA}	510.25	519.8	500.7	19.1	530	540	520	20	540	520	0.0371 at T_{LX}	0.0188 at T_{LN}	0.0183	6,739	17.73	529.00	0.0005	0.028	14.4	0.976	1.000

Uncontrolled VOC Emissions L_S (lb/yr)	L_W (lb/yr)	Total (lb/yr)		% wgt vapors at T_{LA}	Controlled VOC Emissions L_S (lb/yr)	L_W (lb/yr)	Total (lb/yr)
36.33	378.07	414.40	VOC	100.00	0.73	7.56	8.29
			Benzene				
			Biphenyl				
			m-Cresol	0.004	0.00	0.00	0.00
			o-Cresol	0.026	0.00	0.00	0.00
			p-Cresol	0.003	0.00	0.00	0.00
			Cumene				
			Dibenzofuran				
			Ethylbenzene	1.203	0.01	0.09	0.10
			Naphthalene	0.123	0.00	0.01	0.01
			Phenol	0.079	0.00	0.01	0.01
			Quinoline				
			Styrene	0.976	0.01	0.07	0.08
			Toluene				
			m-Xylene	0.957	0.01	0.07	0.08
			o-Xylene	0.757	0.01	0.06	0.06
			p-Xylene	0.808	0.01	0.06	0.07
			Acenaphthene				
			Acenaphthylene				
			Anthracene				
			Benzo(a)anthracene				
			Benzo(b)fluoranthene				
			Benzo(k)fluoranthene				
			Benzo(g,h,i)perylene				
			Benzo(a)pyrene				
			Chrysene				
			Dibenzo(a,h)anthracene				
			Fluoranthene				
			Fluorene				
			Indeno(1,2,3-cd)pyrene				
			Phenanthrene				
			Pyrene				

Tank	Contents	Control Device	% Control	Throughput (gal)	No. Days in Service	Temp °F	D (ft)	Hs (ft)	H_L (ft)	V (gal)	Turn overs	Heat (Y/N)	DP_B (psia)	a	b	T_{LA} (R)	Mv (lb/mol)	Pva (psia)	T_{AB} (R)	T_{bx} (R)	T_{aw} (R)	DT_A (R)	Tsa (R)	Tsx (R)	Tsn (R)	DTs (R)	T_{LX} (R)	T_{LN} (R)	P_{LX} (psia) at T_{LX}	P_{LN} (psia) at T_{LN}	DP_V (psia)	Vv (ft³)	H_{VO} (ft)	T_B (R)	Wv lb/ft³	K_E	DT_v (R)	K_S	Turnover Factor
Tank 24	Unwashed Solvent	None		1,752,000	365	70	20.0	25.0	12.5	58,752	29.8	Y	0.89	1.203		529.44	115.90 at T_{LA}	0.0261 at T_{LA}	510.25	519.8	500.7	19.1	530	540	520	20	540	520	0.0371 at T_{LX}	0.0188 at T_{LN}	0.0183	3,992	12.71	529.00	0.0005	0.028	14.4	0.983	1.000

Uncontrolled VOC Emissions L_S (lb/yr)	L_W (lb/yr)	Total (lb/yr)		% wgt vapors at T_{LA}	Controlled VOC Emissions L_S (lb/yr)	L_W (lb/yr)	Total (lb/yr)
21.67	126.02	147.69	VOC	100.00	21.67	126.02	147.69
			Benzene				
			Biphenyl				
			m-Cresol	0.004	0.00	0.01	0.01
			o-Cresol	0.026	0.01	0.03	0.04
			p-Cresol	0.003	0.00	0.00	0.01
			Cumene				
			Dibenzofuran				
			Ethylbenzene	1.203	0.26	1.52	1.78
			Naphthalene	0.123	0.03	0.15	0.18
			Phenol	0.079	0.02	0.10	0.12
			Quinoline				
			Styrene	0.976	0.21	1.23	1.44
			Toluene				
			m-Xylene	0.957	0.21	1.21	1.41
			o-Xylene	0.757	0.16	0.95	1.12
			p-Xylene	0.808	0.18	1.02	1.19
			Acenaphthene				
			Acenaphthylene				
			Anthracene				
			Benzo(a)anthracene				
			Benzo(b)fluoranthene				
			Benzo(k)fluoranthene				
			Benzo(g,h,i)perylene				
			Benzo(a)pyrene				
			Chrysene				
			Dibenzo(a,h)anthracene				
			Fluoranthene				
			Fluorene				
			Indeno(1,2,3-cd)pyrene				
			Phenanthrene				
			Pyrene				

Table 5-15.

2018 Potential Emissions Inventory, Liquid Fuel/Solvent Storage Tanks Emission Calculations
Koppers Inc., Follansbee Tar Plant, Follansbee, West Virginia

Note: Emissions were estimated using methodology outlined in AP-42, Section 7.1, Organic Liquid Storage Tanks,11/06

Tank ID	Contents	Control Device	% Control	Throughput (gal)	No. Days in Service	Temp °F	D (ft)	Hs (ft)	H_L (ft)	V (gal)	Turn overs	Heat (Y/N)	DP_B (psia)	α	β	T_{LA} (R)	Mv (lb/mol)	Pva (psia)	Taa (R)	Tax (R)	Tan (R)	DT_A (R)	Tsa (R)	Tsx (R)	Tsn (R)	DTs (R)	T_{LX} (R)	T_{LN} (R)	P_{LX} (psia)	P_{LN} (psia)	DP_V (psia)	Vv (ft³)	H_{VO} (ft)	T_B (R)	Wv lb/ft³	K_E	DT_v (R)	K_S	Turnover Factor
Tank 25	Unwashed Solvent	None		1,752,000	365	70	20.0	25.0	12.5	58,752	29.8	Y		0.89	1.303	529.44	115.90 at T_{LA}	0.0261 at T_{LA}	510.25	519.8	500.7	19.1	530	540	520	20	540	520	0.0371 at T_{LX}	0.0188 at T_{LN}	0.0183	3,992	12.71	529.00	0.0005	0.028	14.4	0.983	1.000

Uncontrolled VOC Emissions L_S (lb/yr)	L_W (lb/yr)	Total (lb/yr)		% wgt vapors at T_{LA}	Controlled VOC Emissions L_S (lb/yr)	L_W (lb/yr)	Total (lb/yr)
21.67	126.02	147.69	VOC	100.00	21.67	126.02	147.69
			Benzene				
			Biphenyl				
			m-Cresol	0.004	0.00	0.01	0.01
			o-Cresol	0.026	0.01	0.03	0.04
			p-Cresol	0.003	0.00	0.00	0.01
			Cumene				
			Dibenzofuran				
			Ethylbenzene	1.203	0.26	1.52	1.78
			Naphthalene	0.123	0.03	0.15	0.18
			Phenol	0.079	0.02	0.10	0.12
			Quinoline				
			Styrene	0.976	0.21	1.23	1.44
			Toluene				
			m-Xylene	0.957	0.21	1.21	1.41
			o-Xylene	0.757	0.16	0.95	1.12
			p-Xylene	0.808	0.18	1.02	1.19
			Acenaphthene				
			Acenaphthylene				
			Anthracene				
			Benzo(a)anthracene				
			Benzo(b)fluoranthene				
			Benzo(k)fluoranthene				
			Benzo(g,h,i)perylene				
			Benzo(a)pyrene				
			Chrysene				
			Dibenzo(a,h)anthracene				
			Fluoranthene				
			Fluorene				
			Indeno(1,2,3-cd)pyrene				
			Phenanthrene				
			Pyrene				

Table 5-16.

2018 Potential Emissions Inventory, Thermal Oxidizer Condensate Storage Tanks Emission Calculations
Koppers Inc., Follansbee Tar Plant, Follansbee, West Virginia

Note: Emissions were estimated using methodology outlined in AP-42, Section 7.1, Organic Liquid Storage Tanks, 11/06

Tank ID	Contents	Control Device	% Control	Throughput (gal)	No. Days in Service	Temp °F	D (ft)	Hs (ft)	H_L (ft)	V (gal)	Turn overs	Heat (Btu/hr)	DP_B (psia)	a	b	T_{LA} (R)	Ms (lb/mol)	Pva (psia)	Taa (R)	Tax (R)	Tan (R)	DT_A (R)	Tsa (R)	Tsx (R)	Tsn (R)	DTs (R)	T_{LX} (R)	T_{LN} (R)	P_{LX} (psia)	P_{LN} (psia)	DP_V (psia)	Vv (ft³)	H_{VO} (ft)	T_B (R)	Wv lb/ft³	K_E	DT_v (R)	K_S	Turnover Factor
Tank 363	Thermal Oxidizer Condensate	Flare, Thermal Oxidizer	98	140,000	365	180	14.0	22.5	11.3	25,910	5.4	5		0.89	1.203	639.44	107.72 at T_{LA}	0.1159 at T_{LA}	510.25	519.8	500.7	19.1	640	650	630	20	650	630	0.1467 at T_{LX}	0.0934 at T_{LN}	0.0533	1,754	11.40	639.00	0.0018	0.026	14.4	0.935	1.000

Uncontrolled VOC Emissions L_S (lb/yr)	L_W (lb/yr)	Total (lb/yr)		% wgt vapors at T_{LA}	Controlled VOC Emissions L_S (lb/yr)	L_W (lb/yr)	Total (lb/yr)
28.50	41.60	70.10	VOC	100.00	0.57	0.83	1.40
			Benzene	21.079	0.12	0.18	0.30
			Biphenyl	0.205	0.00	0.00	0.00
			m-Cresol	0.236	0.00	0.00	0.00
			o-Cresol	0.213	0.00	0.00	0.00
			p-Cresol	0.190	0.00	0.00	0.00
			Cumene				
			Dibenzofuran	0.049	0.00	0.00	0.00
			Ethylbenzene	1.081	0.01	0.01	0.02
			Naphthalene	31.711	0.18	0.26	0.44
			Phenol	0.224	0.00	0.00	0.00
			Quinoline	0.344	0.00	0.00	0.00
			Styrene	3.323	0.02	0.03	0.05
			Toluene	9.622	0.05	0.08	0.13
			m-Xylene	2.177	0.01	0.02	0.03
			o-Xylene	1.204	0.01	0.01	0.02
			p-Xylene	2.253	0.01	0.02	0.03
			Acenaphthene	0.386	0.00	0.00	0.01
			Acenaphthylene	0.237	0.00	0.00	0.00
			Anthracene	0.004	0.00	0.00	0.00
			Benzo(a)anthracene	0.000	0.00	0.00	0.00
			Benzo(b)fluoranthene	0.000	0.00	0.00	0.00
			Benzo(k)fluoranthene	0.000	0.00	0.00	0.00
			Benzo(g,h,i)perylene	0.000	0.00	0.00	0.00
			Benzo(a)pyrene	0.000	0.00	0.00	0.00
			Chrysene	0.000	0.00	0.00	0.00
			Dibenzo(a,h)anthracene	0.000	0.00	0.00	0.00
			Fluoranthene	0.008	0.00	0.00	0.00
			Fluorene	0.122	0.00	0.00	0.00
			Indeno(1,2,3-cd)pyrene	0.000	0.00	0.00	0.00
			Phenanthrene	0.017	0.00	0.00	0.00
			Pyrene	0.000	0.00	0.00	0.00

Table 5-17.

2018 Potential Emissions Inventory. Residual Material Storage Tanks Emission Calculations
Koppers Inc., Follansbee Tar Plant, Follansbee, West Virginia
Note. Emissions were estimated using methodology outlined in AP-42, Section 7.1, Organic Liquid Storage Tanks,11/06

Tank ID	Contents	Control Device	% Control	Throughput (gal)	No. Days in Service	Temp °F	D (ft)	Hs (ft)	H_L (ft)	V (gal)	Turn overs	Heat (Y/N)	DP_B (psia)	a	b	T_{LA} (R)	Mv (lb/mol)	Pva (psia)	Taa (R)	Tax (R)	Tan (R)	DT_A (R)	Tsa (R)	Tsx (R)	Tsn (R)	DTs (R)	T_{LX} (R)	T_{LN} (R)	P_{LX} (psia)	P_{LN} (psia)	DP_V (psia)	Vv (ft³)	H_{VO} (ft)	T_B (R)	Wv lb/ft³	K_E	DT_v (R)	K_S	Turnover Factor
Tank 83	Naphthalene	Flare, Thermal Oxidizer	98		365	240	24.5	30.0	15.0	105,797		Y		0.89	1.263	699.44	128.20 at T_{LA}	0.5784 at T_{LA}	510.25	519.8	500.7	19.1	700	710	690	20	710	690	0.7308 at T_{LX}	0.4664 at T_{LN}	0.2644	7.192	15.26	699.00	0.0099	0.039	14.4	0.681	1.000

Turnover Factor Set to 1 to allow treatment as a process tank, not storage tank
Standing losses calculated to allow for use of storage tank for Naphthalene

Uncontrolled VOC Emissions L_S (lb/yr)	L_W (lb/yr)	Total (lb/yr)		% wgt vapors at T_{LA}	Controlled VOC Emissions L_S (lb/yr)	L_W (lb/yr)	Total (lb/yr)
694.62		694.62	**VOC**	100.00	13.89		13.89
			Benzene				
			Biphenyl				
			m-Cresol				
			o-Cresol				
			p-Cresol				
			Cumene				
			Dibenzofuran				
			Ethylbenzene				
			Naphthalene	100.000	13.89		13.89
			Phenol				
			Quinoline				
			Styrene				
			Toluene				
			m-Xylene				
			o-Xylene				
			p-Xylene				
			Acenaphthene				
			Acenaphthylene				
			Anthracene				
			Benzo(a)anthracene				
			Benzo(b)fluoranthene				
			Benzo(k)fluoranthene				
			Benzo(g,h,i)perylene				
			Benzo(a)pyrene				
			Chrysene				
			Dibenzo(a,h)anthracene				
			Fluoranthene				
			Fluorene				
			Indeno(1,2,3-cd)pyrene				
			Phenanthrene				
			Pyrene				

Tank 88	NSR	None			365	195	24.5	30.0	15.0	105,797		Y		0.89	1.263	654.44	136.52 at T_{LA}	0.0394 at T_{LA}	510.25	519.8	500.7	19.1	655	665	645	20	665	645	0.0523 at T_{LX}	0.0304 at T_{LN}	0.0218	7.192	15.26	654.00	0.0008	0.023	14.4	0.969	1.000

Turnover Factor Set to 1 to allow treatment as a process tank, not storage tank
Standing losses calculated to allow for use of storage tank for NSR

Uncontrolled VOC Emissions L_S (lb/yr)	L_W (lb/yr)	Total (lb/yr)		% wgt vapors at T_{LA}	Controlled VOC Emissions L_S (lb/yr)	L_W (lb/yr)	Total (lb/yr)
45.83		45.83	**VOC**	100.00	45.83		45.83
			Benzene				
			Biphenyl	2.903	1.33		1.33
			m-Cresol	0.061	0.03		0.03
			o-Cresol				
			p-Cresol	0.050	0.02		0.02
			Cumene				
			Dibenzofuran	1.461	0.67		0.67
			Ethylbenzene				
			Naphthalene	27.607	12.65		12.65
			Phenol				
			Quinoline	5.608	2.57		2.57
			Styrene				
			Toluene	2.597	1.19		1.19
			m-Xylene				
			o-Xylene	0.833	0.38		0.38
			p-Xylene				
			Acenaphthene	9.564	4.38		4.38
			Acenaphthylene	1.653	0.76		0.76
			Anthracene	0.066	0.03		0.03
			Benzo(a)anthracene				
			Benzo(b)fluoranthene				
			Benzo(k)fluoranthene				
			Benzo(g,h,i)perylene				
			Benzo(a)pyrene				
			Chrysene				
			Dibenzo(a,h)anthracene				
			Fluoranthene	0.075	0.03		0.03
			Fluorene	[illegible]	1.57		1.57
			Indeno(1,2,3-cd)pyrene				
			Phenanthrene	0.310	0.14		0.14
			Pyrene	[illegible]	0.00		0.00

Table 6-1. Assumptions for the 2018 Potential Emissions Inventory, Product Loading
Koppers Inc., Follansbee Tar Plant, Follansbee, West Virginia

Material	Loading Vehicle	Control Device	Control Efficiency	Loading Temperature (F)	Potential Annual Quantity Loaded (gal/yr)	Assumptions		
Crude Tar	Barge	Submerged Loading	0	220	3,000,000			
	Truck or Railcar	Submerged Loading			3,000,000			
Petro Tar	Truck or Railcar	Flare or TO	98	250	6,000,000			
Crude Distillate	Barge, Truck or Railcar	None	0	200	15,000,000	Maximum Crude Tar or Co-Distill Throughput:	60,000,000	gal/yr
						% Yield Middle Oil/Heavy from Feed:	25	%
						Distillate Produced:	15,000,000	gal/yr
						Assume 100 % produced is loaded; remaining used for creosote		
Mixed Petro Oil	Barge, Truck or Railcar	None	0	200	13,500,000	Maximum Petro Tar Throughput:	30,000,000	gal/yr
						% Yield Middle Oil/Heavy from Feed:	45	%
						Distillate Produced:	13,500,000	gal/yr
						Assume 100 % produced is loaded; remaining used for creosote		
Decanted Oil Distillate	Barge, Truck or Railcar	None	0	200	13,500,000	Maximum Decanted Oil Throughput:	30,000,000	gal/yr
						% Yield Middle Oil/Heavy from Feed:	45	%
						Distillate Produced:	13,500,000	gal/yr
						Assume 100 % produced is loaded; remaining used for creosote		
Coal Tar Pitch	Truck or Railcar	Scrubber E	80	500	23,100,000	Maximum Crude Tar Throughput:	60,000,000	gal/yr
						Percent of tar for pitch production:	70	%
						Tar Throughput to Stills for Pitch Production	42,000,000	gal/yr
						Pitch Yield from Feed:	55	%
Type A/B Pitch (Liquid)	Truck or Railcar	Scrubber E	80	500	38,500,000	Total Pitch Producted	23,100,000	gal/yr
						Type A/B Pitch is 60 % Coal Tar Pitch		
						40 % Petroleum Pitch		
Petro Pitch	Truck or Railcar	Scrubber E	80	500	16,500,000	Maximum PetroTar Throughput:	30,000,000	gal/yr
						% Yield Petroleum Pitch from Feed:	55	%
						Pitch Produced	16,500,000	gal/yr
Decanted Oil Pitch	Truck or Railcar	Scrubber E	80	500	16,500,000	Maximum Decanted Oil Throughput:	30,000,000	gal/yr
						% Yield Petroleum Pitch from Feed:	55	%
						Pitch Produced	16,500,000	gal/yr
Pavement Sealer Base	Truck or Railcar	Flare or TO	98	450	11,160,000	Maximum Crude Tar or Co-Distill Throughput:	60,000,000	gal/yr
or						Percent of tar for PSB production:	30	%
Modified Pavement Sealer Base	Truck or Railcar	Flare or TO	98	450	15,942,857	Tar Throughput to Stills for PSB Production:	18,000,000	gal/yr
						% Yield PSB Yield from Feed:	62	%
						PSB Produced:	11,160,000	gal/yr
						MPSB is 70 % PSB		
						30 % Shell Tar		
						Total MPSB	15,942,857	gal/yr
						Emissions are the greater of PSB or MPSB loading		
RCO	Truck or Railcar	Flare or TO	98	210	8,427,120	Provided by B. Cairns		
Naphthalene	Truck or Railcar	Flare or TO	98	230	105,797	One full tank of residual material loaded out		
Naphthalene Still Residue	Barge, Truck or Railcar	None	0	180	105,797	One full tank of residual material loaded out		

Table 6-2. 2018 Potential Emissions Inventory, Summary of Potential Emissions, Product Loading
Koppers Inc., Follansbee Tar Plant, Follansbee, West Virginia

	Potential Emissions (tons/yr)																	
Pollutant	Crude Tar	Petro Tar	RCO	Naphthalene	NSR	Crude Distillate	Petro Distillate	Decant Oil Distillate	Maximum	Coal Tar Pitch	Type A/B Pitch	Petroleum Pitch	Decant Pitch	Maximum	PSB	MPSB	Maximum	Total
VOC	1.431	0.002	0.121	0.002	0.005	1.223	2.383	0.594	2.383	0.534	0.262	0.705	0.705	0.705	0.294	0.545	0.545	5.194
Benzene	0.561	0.000	0.017	0.000	0.000	0.000	0.379	0.000	0.379	0.000	0.000	0.000	0.000	0.000	0.000	0.000	0.000	0.957
Biphenyl	0.003	0.000	0.000	0.000	0.000	0.005	0.020	0.002	0.020	0.000	0.000	0.000	0.000	0.000	0.002	0.014	0.014	0.037
m-Cresol	0.009	0.000	0.000	0.000	0.000	0.000	0.022	0.002	0.022	0.000	0.000	0.000	0.000	0.000	0.000	0.000	0.000	0.032
o-Cresol	0.008	0.000	0.000	0.000	0.000	0.000	0.030	0.004	0.030	0.000	0.000	0.000	0.000	0.000	0.000	0.000	0.000	0.038
p-Cresol	0.009	0.000	0.000	0.000	0.000	0.000	0.018	0.001	0.018	0.000	0.000	0.000	0.000	0.000	0.000	0.000	0.000	0.027
Cumene	0.000	0.000	0.000	0.000	0.000	0.000	0.000	0.000	0.000	0.000	0.000	0.000	0.000	0.000	0.000	0.000	0.000	0.000
Dibenzofuran	0.002	0.000	0.000	0.000	0.000	0.006	0.004	0.001	0.006	0.140	0.000	0.000	0.000	0.140	0.014	0.009	0.014	0.162
Ethylbenzene	0.006	0.000	0.001	0.000	0.000	0.000	0.000	0.041	0.041	0.000	0.000	0.000	0.000	0.000	0.000	0.000	0.000	0.049
Naphthalene	0.243	0.001	0.051	0.002	0.002	0.881	0.783	0.036	0.881	0.000	0.000	0.000	0.000	0.000	0.178	0.315	0.315	1.494
Phenol	0.031	0.000	0.000	0.000	0.000	0.000	0.013	0.002	0.013	0.000	0.000	0.000	0.000	0.000	0.000	0.000	0.000	0.044
Quinoline	0.006	0.000	0.000	0.000	0.000	0.012	0.023	0.001	0.023	0.000	0.000	0.000	0.000	0.000	0.002	0.000	0.002	0.032
Styrene	0.025	0.000	0.004	0.000	0.000	0.000	0.023	0.000	0.023	0.000	0.000	0.000	0.000	0.000	0.000	0.000	0.000	0.051
Toluene	0.171	0.000	0.007	0.000	0.000	0.000	0.258	0.000	0.258	0.000	0.000	0.000	0.000	0.000	0.000	0.000	0.000	0.436
m-Xylene	0.055	0.000	0.003	0.000	0.000	0.000	0.057	0.024	0.057	0.000	0.000	0.000	0.000	0.000	0.000	0.000	0.000	0.116
o-Xylene	0.023	0.000	0.002	0.000	0.000	0.000	0.036	0.010	0.036	0.000	0.000	0.000	0.000	0.000	0.000	0.000	0.000	0.061
p-Xylene	0.057	0.000	0.003	0.000	0.000	0.000	0.059	0.025	0.059	0.000	0.000	0.000	0.000	0.000	0.000	0.000	0.000	0.119
Acenaphthene	0.009	0.000	0.000	0.000	0.001	0.058	0.032	0.001	0.058	0.130	0.000	0.391	0.391	0.391	0.023	0.012	0.023	0.483
Acenaphthylene	0.007	0.000	0.000	0.000	0.000	0.000	0.024	0.002	0.024	0.000	0.000	0.000	0.000	0.000	0.001	0.011	0.011	0.042
Anthracene	0.000	0.000	0.000	0.000	0.000	0.001	0.001	0.000	0.001	0.034	0.024	0.033	0.033	0.034	0.004	0.008	0.008	0.044
Benzo(a)anthracene	0.000	0.000	0.000	0.000	0.000	0.000	0.000	0.000	0.000	0.011	0.006	0.002	0.002	0.011	0.000	0.000	0.000	0.012
Benzo(b)fluoranthene	0.000	0.000	0.000	0.000	0.000	0.000	0.000	0.000	0.000	0.012	0.003	0.000	0.000	0.012	0.000	0.000	0.000	0.012
Benzo(k)fluoranthene	0.000	0.000	0.000	0.000	0.000	0.000	0.000	0.000	0.000	0.001	0.001	0.000	0.000	0.001	0.000	0.000	0.000	0.001
Benzo(g,h,i)perylene	0.000	0.000	0.000	0.000	0.000	0.000	0.000	0.000	0.000	0.001	0.000	0.000	0.000	0.001	0.000	0.000	0.000	0.001
Benzo(a)pyrene	0.000	0.000	0.000	0.000	0.000	0.000	0.000	0.000	0.000	0.002	0.001	0.000	0.000	0.002	0.000	0.000	0.000	0.002
Chrysene	0.000	0.000	0.000	0.000	0.000	0.000	0.000	0.000	0.000	0.003	0.002	0.001	0.001	0.003	0.000	0.000	0.000	0.003
Dibenzo(a,h)anthracene	0.000	0.000	0.000	0.000	0.000	0.000	0.000	0.000	0.000	0.000	0.000	0.000	0.000	0.000	0.000	0.000	0.000	0.000
Fluoranthene	0.000	0.000	0.000	0.000	0.000	0.003	0.001	0.000	0.003	0.110	0.065	0.024	0.024	0.110	0.006	0.013	0.013	0.127
Fluorene	0.004	0.000	0.000	0.000	0.000	0.020	0.010	0.001	0.020	0.010	0.036	0.145	0.145	0.145	0.014	0.028	0.028	0.197
Indeno(1,2,3-cd)pyrene	0.000	0.000	0.000	0.000	0.000	0.000	0.000	0.000	0.000	0.000	0.000	0.000	0.000	0.000	0.000	0.000	0.000	0.000
Phenanthrene	0.001	0.000	0.000	0.000	0.000	0.005	0.002	0.000	0.005	0.039	0.074	0.093	0.093	0.093	0.013	0.026	0.026	0.125
Pyrene	0.000	0.000	0.000	0.000	0.000	0.000	0.000	0.000	0.000	0.029	0.023	0.015	0.015	0.029	0.001	0.002	0.002	0.031
Total HAP	1.229	0.002	0.089	0.002	0.003	0.992	1.794	0.151	1.794	0.523	0.236	0.704	0.704	0.704	0.258	0.438	0.438	4.261
Total POM	0.274	0.002	0.053	0.002	0.003	0.992	0.898	0.044	0.992	0.523	0.236	0.704	0.704	0.704	0.258	0.438	0.438	2.467

Table 6-3. 2018 Potential Emissions Inventory, Liquid Product Loading
Koppers Inc., Follansbee Tar Plant, Follansbee, West Virginia

Input Data and Emissions Calculations

Commodity	Temperature (°F)	Temperature (°R)	Vapor MW (lb/lb-mole)	Vapor Pressure (psia)	Saturation Factor	Emission Factor lb/Mgal	Potential Throughput (gal/yr)	Constituent	% weight in vapors	Potential Emissions ton/yr
Crude Tar	220	680	95.75	0.5441	0.50	0.477	3,000,000	VOC	100.000	0.716
	Loading Vehicle:		Barge					Benzene	39.200	0.280
	Control:		Submerged Loading					Biphenyl	0.183	0.001
	Control Efficiency:		0 %					m-Cresol	0.648	0.005
								o-Cresol	0.576	0.004
								p-Cresol	0.612	0.004
								Cumene	0.000	0.000
								Dibenzofuran	0.121	0.001
								Ethylbenzene	0.444	0.003
								Naphthalene	16.960	0.121
								Phenol	2.149	0.015
								Quinoline	0.403	0.003
								Styrene	1.726	0.012
								Toluene	11.915	0.085
								m-Xylene	3.874	0.028
								o-Xylene	1.629	0.012
								p-Xylene	3.985	0.029
								Acenaphthene	0.613	0.004
								Acenaphthylene	0.470	0.003
								Anthracene	0.025	0.000
								Benzo(a)anthracene	0.000	0.000
								Benzo(b)fluoranthene	0.000	0.000
								Benzo(k)fluoranthene	0.000	0.000
								Benzo(g,h,i)perylene	0.000	0.000
								Benzo(a)pyrene	0.000	0.000
								Chrysene	0.000	0.000
								Dibenzo(a,h)anthracene	0.000	0.000
								Fluoranthene	0.032	0.000
								Fluorene	0.271	0.002
								Indeno(1,2,3-cd)pyrene	0.000	0.000
								Phenanthrene	0.055	0.000
								Pyrene	0.001	0.000
								Total HAP		0.615
Crude Tar	220	680	95.75	0.5441	0.50	0.477	3,000,000	VOC	100.000	0.716
	Loading Vehicle:		Truck or Railcar					Benzene	39.200	0.280
	Control:		Submerged Loading					Biphenyl	0.183	0.001
	Control Efficiency:		0 %					m-Cresol	0.648	0.005
								o-Cresol	0.576	0.004
								p-Cresol	0.612	0.004
								Cumene	0.000	0.000
								Dibenzofuran	0.121	0.001
								Ethylbenzene	0.444	0.003
								Naphthalene	16.960	0.121
								Phenol	2.149	0.015
								Quinoline	0.403	0.003
								Styrene	1.726	0.012
								Toluene	11.915	0.085
								m-Xylene	3.874	0.028
								o-Xylene	1.629	0.012
								p-Xylene	3.985	0.029
								Acenaphthene	0.613	0.004
								Acenaphthylene	0.470	0.003
								Anthracene	0.025	0.000
								Benzo(a)anthracene	0.000	0.000
								Benzo(b)fluoranthene	0.000	0.000
								Benzo(k)fluoranthene	0.000	0.000
								Benzo(g,h,i)perylene	0.000	0.000
								Benzo(a)pyrene	0.000	0.000
								Chrysene	0.000	0.000
								Dibenzo(a,h)anthracene	0.000	0.000
								Fluoranthene	0.032	0.000
								Fluorene	0.271	0.002
								Indeno(1,2,3-cd)pyrene	0.000	0.000
								Phenanthrene	0.055	0.000
								Pyrene	0.001	0.000
								Total HAP		0.615

Table 6-3. 2018 Potential Emissions Inventory, Liquid Product Loading
Koppers Inc., Follansbee Tar Plant, Follansbee, West Virginia

Input Data and Emissions Calculations

Commodity	Temperature (°F)	(°R)	Vapor MW (lb/lb-mole)	Vapor Pressure (psia)	Saturation Factor	Emission Factor lb/Mgal	Potential Throughput (gal/yr)	Constituent	% weight in vapors	Potential Emissions ton/yr
Petro Tar	250	710	136.75	0.0117	1.45	0.041	6,000,000	VOC	100.000	0.002
	Loading Vehicle:		Truck or Railcar					Benzene	0.000	0.000
	Control:		Flare or TO					Biphenyl	1.485	0.000
	Control Efficiency:		98 %					m-Cresol	0.000	0.000
								o-Cresol	0.000	0.000
								p-Cresol	0.000	0.000
								Cumene	0.000	0.000
								Dibenzofuran	1.517	0.000
								Ethylbenzene	0.000	0.000
								Naphthalene	53.733	0.001
								Phenol	0.000	0.000
								Quinoline	0.863	0.000
								Styrene	0.000	0.000
								Toluene	0.000	0.000
								m-Xylene	0.000	0.000
								o-Xylene	0.000	0.000
								p-Xylene	0.000	0.000
								Acenaphthene	9.529	0.000
								Acenaphthylene	2.722	0.000
								Anthracene	0.309	0.000
								Benzo(a)anthracene	0.002	0.000
								Benzo(b)fluoranthene	0.000	0.000
								Benzo(k)fluoranthene	0.000	0.000
								Benzo(g,h,i)perylene	0.000	0.000
								Benzo(a)pyrene	0.000	0.000
								Chrysene	0.000	0.000
								Dibenzo(a,h)anthracene	0.000	0.000
								Fluoranthene	0.285	0.000
								Fluorene	2.416	0.000
								Indeno(1,2,3-cd)pyrene	0.000	0.000
								Phenanthrene	0.934	0.000
								Pyrene	0.034	0.000
								Total HAP		0.002
Crude Distillate	200	660	129.23	0.0462	1.45	0.163	15,000,000	VOC	100.000	1.223
	Loading Vehicle:		Barge, Truck or Railcar					Benzene	0.000	0.000
	Control:		None					Biphenyl	0.421	0.005
	Control Efficiency:		0 %					m-Cresol	0.000	0.000
								o-Cresol	0.000	0.000
								p-Cresol	0.000	0.000
								Cumene	0.000	0.000
								Dibenzofuran	0.491	0.006
								Ethylbenzene	0.000	0.000
								Naphthalene	72.044	0.881
								Phenol	0.000	0.000
								Quinoline	0.968	0.012
								Styrene	0.000	0.000
								Toluene	0.000	0.000
								m-Xylene	0.000	0.000
								o-Xylene	0.000	0.000
								p-Xylene	0.000	0.000
								Acenaphthene	4.773	0.058
								Acenaphthylene	0.000	0.000
								Anthracene	0.098	0.001
								Benzo(a)anthracene	0.001	0.000
								Benzo(b)fluoranthene	0.000	0.000
								Benzo(k)fluoranthene	0.000	0.000
								Benzo(g,h,i)perylene	0.000	0.000
								Benzo(a)pyrene	0.000	0.000
								Chrysene	0.000	0.000
								Dibenzo(a,h)anthracene	0.000	0.000
								Fluoranthene	0.282	0.003
								Fluorene	1.616	0.020
								Indeno(1,2,3-cd)pyrene	0.000	0.000
								Phenanthrene	0.431	0.005
								Pyrene	0.009	0.000
								Total HAP		0.992

Table 6-3. 2018 Potential Emissions Inventory, Liquid Product Loading
Koppers Inc., Follansbee Tar Plant, Follansbee, West Virginia

Input Data and Emissions Calculations

Commodity	Temperature (°F)	(°R)	Vapor MW (lb/lb-mole)	Vapor Pressure (psia)	Saturation Factor	Emission Factor lb/Mgal	Potential Throughput (gal/yr)	Constituent	% weight in vapors	Potential Emissions ton/yr
Mixed Petro Oil	200	660	110.98	0.1161	1.45	0.353	13,500,000	VOC	100.000	2.383
	Loading Vehicle:		Barge, Truck or Railcar					Benzene	15.900	0.379
	Control:		None					Biphenyl	0.837	0.020
	Control Efficiency:		0 %					m-Cresol	0.925	0.022
								o-Cresol	1.250	0.030
								p-Cresol	0.767	0.018
								Cumene	0.000	0.000
								Dibenzofuran	0.171	0.004
								Ethylbenzene	0.000	0.000
								Naphthalene	32.856	0.783
								Phenol	0.533	0.013
								Quinoline	0.979	0.023
								Styrene	0.966	0.023
								Toluene	10.838	0.258
								m-Xylene	2.412	0.057
								o-Xylene	1.512	0.036
								p-Xylene	2.488	0.059
								Acenaphthene	1.327	0.032
								Acenaphthylene	0.994	0.024
								Anthracene	0.025	0.001
								Benzo(a)anthracene	0.000	0.000
								Benzo(b)fluoranthene	0.000	0.000
								Benzo(k)fluoranthene	0.000	0.000
								Benzo(g,h,i)perylene	0.000	0.000
								Benzo(a)pyrene	0.000	0.000
								Chrysene	0.000	0.000
								Dibenzo(a,h)anthracene	0.000	0.000
								Fluoranthene	0.026	0.001
								Fluorene	0.399	0.010
								Indeno(1,2,3-cd)pyrene	0.000	0.000
								Phenanthrene	0.089	0.002
								Pyrene	0.002	0.000
								Total HAP		1.794
Decanted Oil Distillate	200	660	159.64	0.0202	1.45	0.088	13,500,000	VOC	100.000	0.594
	Loading Vehicle:		Barge, Truck or Railcar					Benzene	0.000	0.000
	Control:		None					Biphenyl	0.333	0.002
	Control Efficiency:		0 %					m-Cresol	0.256	0.002
								o-Cresol	0.623	0.004
								p-Cresol	0.212	0.001
								Cumene	0.000	0.000
								Dibenzofuran	0.088	0.001
								Ethylbenzene	6.921	0.041
								Naphthalene	5.977	0.036
								Phenol	0.253	0.002
								Quinoline	0.123	0.001
								Styrene	0.000	0.000
								Toluene	0.000	0.000
								m-Xylene	4.004	0.024
								o-Xylene	1.673	0.010
								p-Xylene	4.130	0.025
								Acenaphthene	0.236	0.001
								Acenaphthylene	0.363	0.002
								Anthracene	0.004	0.000
								Benzo(a)anthracene	0.001	0.000
								Benzo(b)fluoranthene	0.000	0.000
								Benzo(k)fluoranthene	0.000	0.000
								Benzo(g,h,i)perylene	0.000	0.000
								Benzo(a)pyrene	0.000	0.000
								Chrysene	0.000	0.000
								Dibenzo(a,h)anthracene	0.000	0.000
								Fluoranthene	0.017	0.000
								Fluorene	0.225	0.001
								Indeno(1,2,3-cd)pyrene	0.000	0.000
								Phenanthrene	0.027	0.000
								Pyrene	0.003	0.000
								Total HAP		0.151

Table 6-3. 2018 Potential Emissions Inventory, Liquid Product Loading
Koppers Inc., Follansbee Tar Plant, Follansbee, West Virginia

Input Data and Emissions Calculations

Commodity	Temperature (°F)	(°R)	Vapor MW (lb/lb-mole)	Vapor Pressure (psia)	Saturation Factor	Emission Factor lb/Mgal	Potential Throughput (gal/yr)	Constituent	% weight in vapors	Potential Emissions ton/yr
Coal Tar Pitch	500	960	177.55	0.0692	1.45	0.231	23,100,000	VOC	100.000	0.534
	Loading Vehicle:		Truck or Railcar					Benzene	0.000	0.000
	Control:		Scrubber E					Biphenyl	0.000	0.000
	Control Efficiency:		80 %					m-Cresol	0.000	0.000
								o-Cresol	0.000	0.000
								p-Cresol	0.000	0.000
								Cumene	0.000	0.000
								Dibenzofuran	26.235	0.140
								Ethylbenzene	0.000	0.000
								Naphthalene	0.000	0.000
								Phenol	0.000	0.000
								Quinoline	0.000	0.000
								Styrene	0.000	0.000
								Toluene	0.000	0.000
								m-Xylene	0.000	0.000
								o-Xylene	0.000	0.000
								p-Xylene	0.000	0.000
								Acenaphthene	24.313	0.130
								Acenaphthylene	0.000	0.000
								Anthracene	6.415	0.034
								Benzo(a)anthracene	2.105	0.011
								Benzo(b)fluoranthene	2.174	0.012
								Benzo(k)fluoranthene	0.143	0.001
								Benzo(g,h,i)perylene	0.117	0.001
								Benzo(a)pyrene	0.440	0.002
								Chrysene	0.595	0.003
								Dibenzo(a,h)anthracene	0.070	0.000
								Fluoranthene	20.637	0.110
								Fluorene	1.900	0.010
								Indeno(1,2,3-cd)pyrene	0.012	0.000
								Phenanthrene	7.377	0.039
								Pyrene	5.410	0.029
								Total HAP		0.523
Type A/B Pitch	500	960	187.78	0.0192	1.45	0.068	38,500,000	VOC	100.000	0.262
	Loading Vehicle:		Truck or Railcar					Benzene	0.000	0.000
	Control:		Scrubber E					Biphenyl	0.000	0.000
	Control Efficiency:		80 %					m-Cresol	0.000	0.000
								o-Cresol	0.000	0.000
								p-Cresol	0.000	0.000
								Cumene	0.000	0.000
								Dibenzofuran	0.000	0.000
								Ethylbenzene	0.000	0.000
								Naphthalene	0.000	0.000
								Phenol	0.000	0.000
								Quinoline	0.000	0.000
								Styrene	0.000	0.000
								Toluene	0.000	0.000
								m-Xylene	0.000	0.000
								o-Xylene	0.000	0.000
								p-Xylene	0.000	0.000
								Acenaphthene	0.000	0.000
								Acenaphthylene	0.000	0.000
								Anthracene	9.198	0.024
								Benzo(a)anthracene	2.253	0.006
								Benzo(b)fluoranthene	1.211	0.003
								Benzo(k)fluoranthene	0.197	0.001
								Benzo(g,h,i)perylene	0.122	0.000
								Benzo(a)pyrene	0.460	0.001
								Chrysene	0.626	0.002
								Dibenzo(a,h)anthracene	0.019	0.000
								Fluoranthene	24.992	0.065
								Fluorene	13.619	0.036
								Indeno(1,2,3-cd)pyrene	0.015	0.000
								Phenanthrene	28.331	0.074
								Pyrene	8.972	0.023
								Total HAP		0.236

Table 6-3. 2018 Potential Emissions Inventory, Liquid Product Loading
Koppers Inc., Follansbee Tar Plant, Follansbee, West Virginia

Input Data and Emissions Calculations

Commodity	Temperature (°F)	(°R)	Vapor MW (lb/lb-mole)	Vapor Pressure (psia)	Saturation Factor	Emission Factor lb/Mgal	Potential Throughput (gal/yr)	Constituent	% weight in vapors	Potential Emissions ton/yr
Petro Pitch	500	960	162.95	0.1393	1.45	0.427	16,500,000	VOC	100.000	0.705
	Loading Vehicle:		Truck or Railcar					Benzene	0.000	0.000
	Control:		Scrubber E					Biphenyl	0.000	0.000
	Control Efficiency:		80 %					m-Cresol	0.000	0.000
								o-Cresol	0.000	0.000
								p-Cresol	0.000	0.000
								Cumene	0.000	0.000
								Dibenzofuran	0.000	0.000
								Ethylbenzene	0.000	0.000
								Naphthalene	0.000	0.000
								Phenol	0.000	0.000
								Quinoline	0.000	0.000
								Styrene	0.000	0.000
								Toluene	0.000	0.000
								m-Xylene	0.000	0.000
								o-Xylene	0.000	0.000
								p-Xylene	0.000	0.000
								Acenaphthene	55.557	0.391
								Acenaphthylene	0.000	0.000
								Anthracene	4.642	0.033
								Benzo(a)anthracene	0.269	0.002
								Benzo(b)fluoranthene	0.025	0.000
								Benzo(k)fluoranthene	0.003	0.000
								Benzo(g,h,i)perylene	0.000	0.000
								Benzo(a)pyrene	0.028	0.000
								Chrysene	0.095	0.001
								Dibenzo(a,h)anthracene	0.000	0.000
								Fluoranthene	3.346	0.024
								Fluorene	20.619	0.145
								Indeno(1,2,3-cd)pyrene	0.000	0.000
								Phenanthrene	13.245	0.093
								Pyrene	2.122	0.015
								Total HAP		0.704
Decanted Oil Pitch	500	960	162.95	0.1393	1.45	0.427	16,500,000	VOC	100.000	0.705
	Loading Vehicle:		Truck or Railcar					Benzene	0.000	0.000
	Control:		Scrubber E					Biphenyl	0.000	0.000
	Control Efficiency:		80 %					m-Cresol	0.000	0.000
								o-Cresol	0.000	0.000
								p-Cresol	0.000	0.000
								Cumene	0.000	0.000
								Dibenzofuran	0.000	0.000
								Ethylbenzene	0.000	0.000
								Naphthalene	0.000	0.000
								Phenol	0.000	0.000
								Quinoline	0.000	0.000
								Styrene	0.000	0.000
								Toluene	0.000	0.000
								m-Xylene	0.000	0.000
								o-Xylene	0.000	0.000
								p-Xylene	0.000	0.000
								Acenaphthene	55.557	0.391
								Acenaphthylene	0.000	0.000
								Anthracene	4.642	0.033
								Benzo(a)anthracene	0.269	0.002
								Benzo(b)fluoranthene	0.025	0.000
								Benzo(k)fluoranthene	0.003	0.000
								Benzo(g,h,i)perylene	0.000	0.000
								Benzo(a)pyrene	0.028	0.000
								Chrysene	0.095	0.001
								Dibenzo(a,h)anthracene	0.000	0.000
								Fluoranthene	3.346	0.024
								Fluorene	20.619	0.145
								Indeno(1,2,3-cd)pyrene	0.000	0.000
								Phenanthrene	13.245	0.093
								Pyrene	2.122	0.015
								Total HAP		0.704

Table 6-3. 2018 Potential Emissions Inventory, Liquid Product Loading
Koppers Inc., Follansbee Tar Plant, Follansbee, West Virginia

Input Data and Emissions Calculations

Commodity	Temperature (°F)	(°R)	Vapor MW (lb/lb-mole)	Vapor Pressure (psia)	Saturation Factor	Emission Factor lb/Mgal	Potential Throughput (gal/yr)	Constituent	% weight in vapors	Potential Emissions ton/yr
Pavement Sealer Base	450	910	138.57	0.9564	1.45	2.631	11,160,000	VOC	100.000	0.294
	Loading Vehicle:		Truck or Railcar					Benzene	0.000	0.000
	Control:		Flare or TO					Biphenyl	0.713	0.002
	Control Efficiency:		98 %					m-Cresol	0.000	0.000
								o-Cresol	0.000	0.000
								p-Cresol	0.000	0.000
								Cumene	0.000	0.000
								Dibenzofuran	4.684	0.014
								Ethylbenzene	0.000	0.000
								Naphthalene	60.612	0.178
								Phenol	0.000	0.000
								Quinoline	0.670	0.002
								Styrene	0.000	0.000
								Toluene	0.000	0.000
								m-Xylene	0.000	0.000
								o-Xylene	0.000	0.000
								p-Xylene	0.000	0.000
								Acenaphthene	7.938	0.023
								Acenaphthylene	0.256	0.001
								Anthracene	1.291	0.004
								Benzo(a)anthracene	0.067	0.000
								Benzo(b)fluoranthene	0.016	0.000
								Benzo(k)fluoranthene	0.002	0.000
								Benzo(g,h,i)perylene	0.001	0.000
								Benzo(a)pyrene	0.005	0.000
								Chrysene	0.012	0.000
								Dibenzo(a,h)anthracene	0.000	0.000
								Fluoranthene	2.180	0.006
								Fluorene	4.704	0.014
								Indeno(1,2,3-cd)pyrene	0.001	0.000
								Phenanthrene	4.274	0.013
								Pyrene	0.336	0.001
								Total HAP		0.258
Modified Pavement Sealer Base	450	910	138.61	1.2431	1.45	3.421	15,942,857	VOC	100.000	0.545
	Loading Vehicle:		Truck or Railcar					Benzene	0.000	0.000
	Control:		Flare or TO					Biphenyl	2.567	0.014
	Control Efficiency:		98 %					m-Cresol	0.000	0.000
								o-Cresol	0.000	0.000
								p-Cresol	0.000	0.000
								Cumene	0.000	0.000
								Dibenzofuran	1.570	0.009
								Ethylbenzene	0.000	0.000
								Naphthalene	57.772	0.315
								Phenol	0.000	0.000
								Quinoline	0.000	0.000
								Styrene	0.000	0.000
								Toluene	0.000	0.000
								m-Xylene	0.000	0.000
								o-Xylene	0.000	0.000
								p-Xylene	0.000	0.000
								Acenaphthene	2.120	0.012
								Acenaphthylene	2.027	0.011
								Anthracene	1.517	0.008
								Benzo(a)anthracene	0.069	0.000
								Benzo(b)fluoranthene	0.024	0.000
								Benzo(k)fluoranthene	0.001	0.000
								Benzo(g,h,i)perylene	0.001	0.000
								Benzo(a)pyrene	0.006	0.000
								Chrysene	0.015	0.000
								Dibenzo(a,h)anthracene	0.000	0.000
								Fluoranthene	2.327	0.013
								Fluorene	5.164	0.028
								Indeno(1,2,3-cd)pyrene	0.000	0.000
								Phenanthrene	4.726	0.026
								Pyrene	0.416	0.002
								Total HAP		0.438

Table 6-3. 2018 Potential Emissions Inventory, Liquid Product Loading
Koppers Inc., Follansbee Tar Plant, Follansbee, West Virginia

Input Data and Emissions Calculations

Commodity	Temperature (°F)	Temperature (°R)	Vapor MW (lb/lb-mole)	Vapor Pressure (psia)	Saturation Factor	Emission Factor lb/Mgal	Potential Throughput (gal/yr)	Constituent	% weight in vapors	Potential Emissions ton/yr
RCO	210	670	111.25	0.4794	1.45	1.438	8,427,120	VOC	100.000	0.121
	Loading Vehicle:		Truck or Railcar					Benzene	14.237	0.017
	Control:		Flare or TO					Biphenyl	0.141	0.000
	Control Efficiency:		98 %					m-Cresol	0.162	0.000
								o-Cresol	0.000	0.000
								p-Cresol	0.136	0.000
								Cumene	0.000	0.000
								Dibenzofuran	0.049	0.000
								Ethylbenzene	0.981	0.001
								Naphthalene	42.301	0.051
								Phenol	0.232	0.000
								Quinoline	0.320	0.000
								Styrene	2.923	0.004
								Toluene	5.898	0.007
								m-Xylene	2.240	0.003
								o-Xylene	1.252	0.002
								p-Xylene	2.308	0.003
								Acenaphthene	0.314	0.000
								Acenaphthylene	0.134	0.000
								Anthracene	0.002	0.000
								Benzo(a)anthracene	0.000	0.000
								Benzo(b)fluoranthene	0.000	0.000
								Benzo(k)fluoranthene	0.000	0.000
								Benzo(g,h,i)perylene	0.000	0.000
								Benzo(a)pyrene	0.000	0.000
								Chrysene	0.000	0.000
								Dibenzo(a,h)anthracene	0.000	0.000
								Fluoranthene	0.003	0.000
								Fluorene	0.103	0.000
								Indeno(1,2,3-cd)pyrene	0.000	0.000
								Phenanthrene	0.011	0.000
								Pyrene	0.000	0.000
								Total HAP		0.089
Naphthalene	230	690	128.20	0.4664	1.45	1.566	105,797	VOC	100.000	0.002
	Loading Vehicle:		Truck or Railcar					Benzene	0.000	0.000
	Control:		Flare or TO					Biphenyl	0.000	0.000
	Control Efficiency:		98 %					m-Cresol	0.000	0.000
								o-Cresol	0.000	0.000
								p-Cresol	0.000	0.000
								Cumene	0.000	0.000
								Dibenzofuran	0.000	0.000
								Ethylbenzene	0.000	0.000
								Naphthalene	100.000	0.002
								Phenol	0.000	0.000
								Quinoline	0.000	0.000
								Styrene	0.000	0.000
								Toluene	0.000	0.000
								m-Xylene	0.000	0.000
								o-Xylene	0.000	0.000
								p-Xylene	0.000	0.000
								Acenaphthene	0.000	0.000
								Acenaphthylene	0.000	0.000
								Anthracene	0.000	0.000
								Benzo(a)anthracene	0.000	0.000
								Benzo(b)fluoranthene	0.000	0.000
								Benzo(k)fluoranthene	0.000	0.000
								Benzo(g,h,i)perylene	0.000	0.000
								Benzo(a)pyrene	0.000	0.000
								Chrysene	0.000	0.000
								Dibenzo(a,h)anthracene	0.000	0.000
								Fluoranthene	0.000	0.000
								Fluorene	0.000	0.000
								Indeno(1,2,3-cd)pyrene	0.000	0.000
								Phenanthrene	0.000	0.000
								Pyrene	0.000	0.000
								Total HAP		0.002

Table 6-3. 2018 Potential Emissions Inventory, Liquid Product Loading
Koppers Inc., Follansbee Tar Plant, Follansbee, West Virginia

Input Data and Emissions Calculations

Commodity	Temperature (°F)	(°R)	Vapor MW (lb/lb-mole)	Vapor Pressure (psia)	Saturation Factor	Emission Factor lb/Mgal	Potential Throughput (gal/yr)	Constituent	% weight in vapors	Potential Emissions ton/yr
Naphthalene Still Residue	180	640	135.96	0.0265	1.45	0.102	105.797	VOC	100.000	0.005
	Loading Vehicle:		Barge, Truck or Railcar					Benzene	0.000	0.000
	Control:		None					Biphenyl	2.754	0.000
	Control Efficiency:		0 %					m-Cresol	0.060	0.000
								o-Cresol	0.000	0.000
								p-Cresol	0.048	0.000
								Cumene	0.000	0.000
								Dibenzofuran	1.325	0.000
								Ethylbenzene	0.000	0.000
								Naphthalene	28.275	0.002
								Phenol	0.000	0.000
								Quinoline	5.625	0.000
								Styrene	0.000	0.000
								Toluene	2.965	0.000
								m-Xylene	0.000	0.000
								o-Xylene	0.916	0.000
								p-Xylene	0.000	0.000
								Acenaphthene	9.392	0.001
								Acenaphthylene	1.623	0.000
								Anthracene	0.058	0.000
								Benzo(a)anthracene	0.000	0.000
								Benzo(b)fluoranthene	0.000	0.000
								Benzo(k)fluoranthene	0.000	0.000
								Benzo(g,h,i)perylene	0.000	0.000
								Benzo(a)pyrene	0.000	0.000
								Chrysene	0.000	0.000
								Dibenzo(a,h)anthracene	0.000	0.000
								Fluoranthene	0.069	0.000
								Fluorene	3.287	0.000
								Indeno(1,2,3-cd)pyrene	0.000	0.000
								Phenanthrene	0.268	0.000
								Pyrene	0.002	0.000
								Total HAP		0.003

Calculational Procedure

Emissions factor calculated using the procedures of AP-42, Section 5.2, *Transportation and Marketing of Petroleum Liquids, 7/08.* If loading into either barges, trucks or railcars, the highest saturation factor of 1.45 was used for highest emissions.

Table 7-1. Assumptions for the 2018 Potential Emissions Inventory,
Heat-up Losses from Incoming Material Barges and Tankcars
Koppers Inc., Follansbee Tar Plant, Follansbee, West Virginia

CCOT Barge Heating

Barge Capacity =		500,000	gallons		
Percent Material in Vessel =		75	%		
Volume of Free Space in Vessel =		125,000	gallons, or	16,710.11	cf/vessel
Time it takes to heat a vessel =		24	hrs/vessel		
Maximum CCOT Received by Barge =		2,000,000	gal/yr, ESTIMATE		
Number of barges heated per year =		5	vessels/yr		
Initial Temperature =	50 F, or	510	R		
Final Temperature =	180 F, or	640	R		
Controls	None				

CCOT Tankcar Heating

Tankcar capacity =		20,000	gallons		
Percent Material in Vessel =		75	%		
Volume of Free Space in Vessel =		5,000	gallons, or	668.40	cf/vessel
Time it takes to heat a vessel =		1	hr/vessel		
Number tankcars heated per week =		1	vessels/week		
Number tankcars heated per year =		52	vessels/year, OR	1,040,000	gal/yr
Initial Temperature =	50 F, or	510	R		
Final Temperature =	180 F, or	640	R		
Controls	None				

Petro Tar Tankcar Heating

Tankcar capacity =		20,000	gallons		
Percent Material in Vessel =		75	%		
Volume of Free Space in Vessel =		5,000	gallons, or	668.40	cf/vessel
Time it takes to heat a vessel =		1	hr/vessel		
Number tankcars heated per month =		250	vessels/month, OR	60,000,000	gal/yr
Number tankcars heated per year =		3,000	vessels/year		
Initial Temperature =	50 F, or	510	R		
Final Temperature =	180 F, or	640	R		
Controls	None				

Decant Oil Tankcar Heating

Tankcar capacity =		20,000	gallons		
Percent Material in Vessel =		75	%		
Volume of Free Space in Vessel =		5,000	gallons, or	668.40	cf/vessel
Time it takes to heat a vessel =		1	hr/vessel		
Number tankcars heated per month =		250	vessels/month, OR	60,000,000	gal/yr
Number tankcars heated per year =		3,000	vessels/year		
Initial Temperature =	50 F, or	510	R		
Final Temperature =	180 F, or	640	R		
Controls	None				

Table 7-2. 2018 Potential Emissions Inventory, Heat-up Losses from Incoming Raw Material Barges and Tankcars
Koppers Inc., Follansbee Tar Plant, Follansbee, West Virginia

Emission Approach

Reference - *"Control of Volatile Organic Compound Emissions from Batch Processes - Alternative Control Techniques Information Document"*, February 1994, USEPA

$E = (P_{iT1}/Pa_1 + P_{iT2}/Pa_2)/2 \times Delta(n) \times MWi$

where E = Mass of emissions emitted from heating

P_{iT1} = Partial pressure of constituent in aqueous solution at initial temperature

P_{iT2} = Partial pressure of constituent in aqueous solution at final temperature

Pa_1 = Initial noncondensable gas pressure in the vessel = $Pa_1 = 14.7 - \sum P_{iT1}$

Pa_2 = Final noncondensable gas pressure in the vessel = $Pa_2 = 14.7 - \sum P_{iT2}$

MWi = Molecular weight of constituent

Delta(n) = Number of moles of noncondensable gas displaced

$Delta(n) = V/R[(P_{a1}/T_1) - (P_{a2}/T_2)]$

V = Volume of free space in vessel

R = Ideal Gas Law = 10.731 psi-cf/lb-mole-R

T1 = Initital Temperature

T2 = Final Temperature

Input Data

Material	Controls	Efficiency	Time to Heat Vessel (hr/vessel)	Maximum Vessels to be Heated (vessels/yr)	T_1 (R)	T_2 (R)	V (cf/vessel)
Crude Tar - Barge	None	0	24.0	5	510	640	16.710
Crude Tar - Tankcar	None	0	1.0	52	510	640	668
Petro Tar - Tankcar	None	0	1.0	3.000	510	640	668
Decant Oil - Tankcar	None	0	1.0	3.000	510	640	668

Calculations

Pollutant	Crude Tar - Barge MWi (lb/mol)	P_{iT1} (psia)	P_{iT2} (psia)	(lbs/vessel)	E (lb/hr)	(ton/yr)	Crude Tar - Tankcar MWi (lb/mol)	P_{iT1} (psia)	P_{iT2} (psia)	(lbs/vessel)	E (lb/hr)	(ton/yr)
		Pa_1 =	14.6892					Pa_1 =	14.6892			
		Pa_2 =	14.4483					Pa_2 =	14.4483			
		Delta(n) =	9.6964					Delta(n) =	0.3879			
VOC	93.064	0.0108	0.2517	8.1900	0.3412	0.0205	93.064	0.0108	0.2517	0.3276	0.3276	0.0085
Benzene	78.10	0.0077	0.1352	3.7412	0.1559	0.0094	78.10	0.0077	0.1352	0.1496	0.1496	0.0039
Biphenyl	154.20	0.0000	0.0002	0.0096	0.0004	0.0000	154.20	0.0000	0.0002	0.0004	0.0004	0.0000
m-Cresol	108.10	0.0000	0.0010	0.0372	0.0015	0.0001	108.10	0.0000	0.0010	0.0015	0.0015	0.0000
o-Cresol	108.10	0.0000	0.0009	0.0340	0.0014	0.0001	108.10	0.0000	0.0009	0.0014	0.0014	0.0000
p-Cresol	108.10	0.0000	0.0009	0.0333	0.0014	0.0001	108.10	0.0000	0.0009	0.0013	0.0013	0.0000
Cumene	120.20	0.0000	0.0000	0.0000	0.0000	0.0000	120.20	0.0000	0.0000	0.0000	0.0000	0.0000
Dibenzofuran	168.20	0.0000	0.0001	0.0056	0.0002	0.0000	168.20	0.0000	0.0001	0.0002	0.0002	0.0000
Ethylbenzene	106.20	0.0000	0.0010	0.0360	0.0015	0.0001	106.20	0.0000	0.0010	0.0014	0.0014	0.0000
Naphthalene	128.20	0.0003	0.0251	1.0920	0.0455	0.0027	128.20	0.0003	0.0251	0.0437	0.0437	0.0011
Phenol	94.10	0.0000	0.0039	0.1251	0.0052	0.0003	94.10	0.0000	0.0039	0.0050	0.0050	0.0001
Quinoline	129.20	0.0000	0.0006	0.0245	0.0010	0.0001	129.20	0.0000	0.0006	0.0010	0.0010	0.0000
Styrene	104.20	0.0001	0.0038	0.1348	0.0056	0.0003	104.20	0.0001	0.0038	0.0054	0.0054	0.0001
Toluene	92.40	0.0014	0.0327	1.0565	0.0440	0.0026	92.40	0.0014	0.0327	0.0423	0.0423	0.0011
m-Xylene	106.20	0.0003	0.0085	0.3104	0.0129	0.0008	106.20	0.0003	0.0085	0.0124	0.0124	0.0003
o-Xylene	106.20	0.0001	0.0035	0.1286	0.0054	0.0003	106.20	0.0001	0.0035	0.0051	0.0051	0.0001
p-Xylene	106.20	0.0003	0.0088	0.3214	0.0134	0.0008	106.20	0.0003	0.0088	0.0129	0.0129	0.0003
Acenaphthene	154.20	0.0000	0.0007	0.0351	0.0015	0.0001	154.20	0.0000	0.0007	0.0014	0.0014	0.0000
Acenaphthylene	152.20	0.0000	0.0005	0.0269	0.0011	0.0001	152.20	0.0000	0.0005	0.0011	0.0011	0.0000
Anthracene	178.20	0.0000	0.0000	0.0010	0.0000	0.0000	178.20	0.0000	0.0000	0.0000	0.0000	0.0000
Benzo(a)anthracene	228.30	0.0000	0.0000	0.0000	0.0000	0.0000	228.30	0.0000	0.0000	0.0000	0.0000	0.0000
Benzo(b)fluoranthene	252.30	0.0000	0.0000	0.0000	0.0000	0.0000	252.30	0.0000	0.0000	0.0000	0.0000	0.0000
Benzo(k)fluoranthene	252.30	0.0000	0.0000	0.0000	0.0000	0.0000	252.30	0.0000	0.0000	0.0000	0.0000	0.0000
Benzo(g,h,i)perylene	276.30	0.0000	0.0000	0.0000	0.0000	0.0000	276.30	0.0000	0.0000	0.0000	0.0000	0.0000
Benzo(a)pyrene	252.30	0.0000	0.0000	0.0000	0.0000	0.0000	252.30	0.0000	0.0000	0.0000	0.0000	0.0000
Chrysene	228.30	0.0000	0.0000	0.0000	0.0000	0.0000	228.30	0.0000	0.0000	0.0000	0.0000	0.0000
Dibenzo(a,h)anthracene	278.40	0.0000	0.0000	0.0000	0.0000	0.0000	278.40	0.0000	0.0000	0.0000	0.0000	0.0000
Fluoranthene	202.30	0.0000	0.0000	0.0015	0.0001	0.0000	202.30	0.0000	0.0000	0.0001	0.0001	0.0000
Fluorene	166.20	0.0000	0.0003	0.0146	0.0006	0.0000	166.20	0.0000	0.0003	0.0006	0.0006	0.0000
Indeno(1,2,3-cd)pyrene	276.30	0.0000	0.0000	0.0000	0.0000	0.0000	276.30	0.0000	0.0000	0.0000	0.0000	0.0000
Phenanthrene	178.20	0.0000	0.0000	0.0022	0.0001	0.0000	178.20	0.0000	0.0000	0.0001	0.0001	0.0000
Pyrene	202.30	0.0000	0.0000	0.0000	0.0000	0.0000	202.30	0.0000	0.0000	0.0000	0.0000	0.0000
TOTAL HAP					0.2988	0.0179					0.2869	0.0075
TOTAL POM					0.0505	0.0030					0.0485	0.0013

Pollutant	Petro Tar - Tankcar MWi (lb/mol)	P_{iT1} (psia)	P_{iT2} (psia)	(lbs/vessel)	E (lb/hr)	(ton/yr)	Decant Oil - Tankcar MWi (lb/mol)	P_{iT1} (psia)	P_{iT2} (psia)	(lbs/vessel)	E (lb/hr)	(ton/yr)	Potential Emissions (ton/yr)
		Pa_1 =	14.7000					Pa_1 =	14.6999				
		Pa_2 =	14.6980					Pa_2 =	14.6909				
		Delta(n) =	0.3649					Delta(n) =	0.3656				
VOC	135.460	0.0000	0.0020	0.0033	0.0033	0.0050	175.154	0.0001	0.0091	0.0201	0.0201	0.0302	0.0642
Benzene	78.10	0.0000	0.0000	0.0000	0.0000	0.0000	78.10	0.0000	0.0000	0.0000	0.0000	0.0000	0.0132
Biphenyl	154.20	0.0000	0.0000	0.0000	0.0000	0.0001	154.20	0.0000	0.0000	0.0000	0.0000	0.0000	0.0001
m-Cresol	108.10	0.0000	0.0000	0.0000	0.0000	0.0000	108.10	0.0000	0.0000	0.0000	0.0000	0.0000	0.0001
o-Cresol	108.10	0.0000	0.0000	0.0000	0.0000	0.0000	108.10	0.0000	0.0000	0.0000	0.0000	0.0000	0.0001
p-Cresol	108.10	0.0000	0.0000	0.0000	0.0000	0.0000	108.10	0.0000	0.0000	0.0000	0.0000	0.0000	0.0001
Cumene	120.20	0.0000	0.0000	0.0000	0.0000	0.0000	120.20	0.0000	0.0000	0.0000	0.0000	0.0000	0.0000
Dibenzofuran	168.20	0.0000	0.0000	0.0000	0.0000	0.0000	168.20	0.0000	0.0000	0.0000	0.0000	0.0000	0.0001
Ethylbenzene	106.20	0.0000	0.0000	0.0000	0.0000	0.0000	106.20	0.0000	0.0000	0.0000	0.0000	0.0000	0.0001
Naphthalene	128.20	0.0000	0.0012	0.0020	0.0020	0.0030	128.20	0.0000	0.0019	0.0030	0.0030	0.0046	0.0114
Phenol	94.10	0.0000	0.0000	0.0000	0.0000	0.0000	94.10	0.0000	0.0000	0.0000	0.0000	0.0000	0.0004
Quinoline	129.20	0.0000	0.0000	0.0000	0.0000	0.0000	129.20	0.0000	0.0000	0.0000	0.0000	0.0000	0.0001
Styrene	104.20	0.0000	0.0000	0.0000	0.0000	0.0000	104.20	0.0000	0.0000	0.0000	0.0000	0.0000	0.0005
Toluene	92.40	0.0000	0.0000	0.0000	0.0000	0.0000	92.40	0.0000	0.0000	0.0000	0.0000	0.0000	0.0037
m-Xylene	106.20	0.0000	0.0000	0.0000	0.0000	0.0000	106.20	0.0000	0.0000	0.0000	0.0000	0.0000	0.0011
o-Xylene	106.20	0.0000	0.0000	0.0000	0.0000	0.0000	106.20	0.0000	0.0000	0.0000	0.0000	0.0000	0.0005
p-Xylene	106.20	0.0000	0.0000	0.0000	0.0000	0.0000	106.20	0.0000	0.0000	0.0000	0.0000	0.0000	0.0011
Acenaphthene	154.20	0.0000	0.0002	0.0003	0.0003	0.0004	154.20	0.0000	0.0000	0.0000	0.0000	0.0001	0.0006
Acenaphthylene	152.20	0.0000	0.0000	0.0001	0.0001	0.0001	152.20	0.0000	0.0000	0.0000	0.0000	0.0000	0.0003
Anthracene	178.20	0.0000	0.0000	0.0000	0.0000	0.0000	178.20	0.0000	0.0000	0.0000	0.0000	0.0000	0.0000
Benzo(a)anthracene	228.30	0.0000	0.0000	0.0000	0.0000	0.0000	228.30	0.0000	0.0000	0.0000	0.0000	0.0000	0.0000
Benzo(b)fluoranthene	252.30	0.0000	0.0000	0.0000	0.0000	0.0000	252.30	0.0000	0.0000	0.0000	0.0000	0.0000	0.0000
Benzo(k)fluoranthene	252.30	0.0000	0.0000	0.0000	0.0000	0.0000	252.30	0.0000	0.0000	0.0000	0.0000	0.0000	0.0000
Benzo(g,h,i)perylene	276.30	0.0000	0.0000	0.0000	0.0000	0.0000	276.30	0.0000	0.0000	0.0000	0.0000	0.0000	0.0000
Benzo(a)pyrene	252.30	0.0000	0.0000	0.0000	0.0000	0.0000	252.30	0.0000	0.0000	0.0000	0.0000	0.0000	0.0000
Chrysene	228.30	0.0000	0.0000	0.0000	0.0000	0.0000	228.30	0.0000	0.0000	0.0000	0.0000	0.0000	0.0000
Dibenzo(a,h)anthracene	278.40	0.0000	0.0000	0.0000	0.0000	0.0000	278.40	0.0000	0.0000	0.0000	0.0000	0.0000	0.0000
Fluoranthene	202.30	0.0000	0.0000	0.0000	0.0000	0.0000	202.30	0.0000	0.0000	0.0000	0.0000	0.0000	0.0000
Fluorene	166.20	0.0000	0.0000	0.0001	0.0001	0.0001	166.20	0.0000	0.0000	0.0000	0.0000	0.0000	0.0002
Indeno(1,2,3-cd)pyrene	276.30	0.0000	0.0000	0.0000	0.0000	0.0000	276.30	0.0000	0.0000	0.0000	0.0000	0.0000	0.0000
Phenanthrene	178.20	0.0000	0.0000	0.0000	0.0000	0.0000	178.20	0.0000	0.0000	0.0000	0.0000	0.0000	0.0000
Pyrene	202.30	0.0000	0.0000	0.0000	0.0000	0.0000	202.30	0.0000	0.0000	0.0000	0.0000	0.0000	0.0000
TOTAL HAP					0.0025	0.0038					0.0031	0.0047	0.0339
TOTAL POM					0.0025	0.0038					0.0031	0.0047	0.0128

Table 8-1. Assumptions for the 2018 Potential Emissions Inventory, Wastewater Treatment Plant
Koppers Inc., Follansbee Tar Plant, Follansbee, West Virginia

Compound	Process Water Concentrations[1] Test 1 (µg/L)	Test 2 (µg/L)	Test 3 (µg/L)	Maximum (µg/L)	Maximum (ppm)	Storm Water Concentrations[1] Test 1 (µg/L)	Test 2 (µg/L)	Test 3 (µg/L)	Maximum (µg/L)	Maximum (ppm)	Deben. Drain Concentration[2] (ppm)	Aeration Tank Inlet Concentration[3,4] (ppm)
Acenaphthene	5,100	4,900	6,300	6,300	6.30	0	0	0	0	0.00		2.52
Acenaphthylene	530	500	640	640	0.64	0	0	0	0	0.00		0.26
Anthracene	2,000	1,800	2,400	2,400	2.40	0	0	0	0	0.00		0.96
Benzene	5,700	6,600	5,400	6,600	6.60	1,400	1,600	1,600	1,600	1.60	1,824	5.26
Benzo(a)anthracene [5]	470	460	570	570	0.57	0	0	0	0	0.00		0.23
Carbozole	1,000	1,000	1,200	1,200	1.20	0	0	0	0	0.00		0.48
Chrysene [5]	0	0	500	500	0.50	0	0	0	0	0.00		0.20
2-Methylphenol (o-Cresols)	4,700	5,000	4,800	5,000	5.00	5,100	5,000	4,900	5,100	5.10		5.06
4-Methylphenol (p-Cresols)	9,900	11,000	10,000	11,000	11.00	11,000	11,000	11,000	11,000	11.00		11.00
Dibenzofuran	3,300	3,200	4,100	4,100	4.10	0	0	0	0	0.00		1.64
2,4-Dimethylphenol	1,300	1,300	1,300	1,300	1.30	1,500	1,400	1,400	1,500	1.50		1.42
Ethylbenzene	870	1,000	810	1,000	1.00	130	71	77	130	0.13		0.48
Fluoranthene	2,600	2,500	3,200	3,200	3.20	0	0	0	0	0.00		1.28
Fluorene	3,900	3,700	4,800	4,800	4.80	0	0	0	0	0.00		1.92
2-Methylnaphthalene	6,300	6,400	8,100	8,100	8.10	1,500	1,400	1,500	1,500	1.50		4.14
Naphthalene	52,000	48,000	59,000	59,000	59.00	20,000	19,000	19,000	20,000	20.00		35.60
Phenanthrene	6,800	6,400	8,000	8,000	8.00	0	0	0	0	0.00		3.20
Phenol	16,000	24,000	24,000	24,000	24.00	19,000	20,000	19,000	20,000	20.00		21.60
Pyrene	1,600	1,500	2,000	2,000	2.00	0	0	0	0	0.00		0.80
Styrene	3,200	3,100	0	3,200	3.20	0	280	300	300	0.30		1.46
Toluene	5,100	5,400	4,200	5,400	5.40	830	880	980	980	0.98		2.75
Xylenes (total)	7,000	7,700	5,500	7,700	7.70	940	770	870	940	0.94		3.64

[1] Concentration based on 1996 NVS Laboratory Data

[2] Solubility of benzene at 95 C.

[3] The emissions from the API and DAF Separator are used as the as the process air in the aeration basins, therefore, emissions not calculated. To account for the additional emissions from the process air from the API and DAF, the original concentrations were used at the aeration basins.

[4] Aeration basin influent concentration based on 40% process water (into API), 60% stormwater (into DAF). An additional 0.274 gpm of deben drain water (into API) flowing into the system is used for benzene calculations, but because no further data is provided for other constituents, this flowrate is ignored for all other compounds except benzene.

Potential Flow Into DAF and Aeration Basin **300.00** gal/min
####### m^3/sec
18.927 l/sec

Sample Calcs for Aeration Tank Inlet Concentration

Benzene

$$\frac{(40\%\ \text{process water} * 300\ \text{gpm} * 6.6\ \text{ppm} + 60\%\ \text{stormwater} * 300\ \text{gpm} * 1.6\ \text{ppm} + 0.274\ \text{gpm} * 1{,}824\ \text{ppm})}{(300 + 0.274)\ \text{gpm}} = 5.27\ \text{ppm}$$

Acenaphthene (and all others)

$$\frac{(40\%\ \text{process water} * 300\ \text{gpm} * 6.3\ \text{ppm} + 60\%\ \text{stormwater} * 300\ \text{gpm} * 0.0\ \text{ppm})}{300\ \text{gpm}} = 2.52\ \text{ppm}$$

Aeration Tank Inputs

A 6' blade disperses the air sparged into the systemthrough a ring. Baffles distribute the oxygen to the biomass.(Drawings: Chester TCEDWG 3978-07, Koppers DWG LFO-0250)

*Wastewater Temperature = 85°F (29.4 °C) (Observed Jill Merrill 12/97)

*Tank Dimensions = (S. Lish, 10/1996)

Circular Tank Diameter = 92'

Tank Depth = 24'

Water 9 Input

Equivalent Diameter--Length & Width = 0.887 x Diameter

$$\frac{92' \mid 1' \mid 0.887}{\mid 3.2808\ \text{m}} \qquad 24.87\text{m}$$

Depth = 24'=7.4m Use 6.5 m to account for headspace

*Fraction Surface Adjitated/Fraction Surface Quiescent

Observed by J. Merrill 12/97 to be less than 10 % possibly as low as 2%.

To maintain a conservative estimate assume 5% agitated and 95% quiescent.

*Overall Biorate mg/g bio-hr assumed to equal EPA (Water 9) default of 19

*Influent Air Flow

Three 1500 CFM blowers are available to inject air into the tank. Two are operated at any one time

$$\frac{2\ \text{blowers} \mid 1500\ \text{ft3} \mid 1\text{min} \mid 1\text{m3}}{\mid \text{min} \mid 60\text{s} \mid 35.3145\ \text{ft3}} \qquad 1.42\ \frac{\text{m}^3}{\text{s}}$$

*Activated Sludge Biomass

Biomass Concentration = 8820 g/m3 or 8.82 g/l (S.Lish 10/96)

Clarifier Tank Inputs

*Wastewater Temperature = 25°C (Observed Jill Merrill 12/97)

*Clarifier Dimensions = (S. Lish, 10/1996)

Circular Tank Diameter = 65' = 19.8 meter

Tank Depth = 16' = 4.87 m

Use 4 meter depth to account for headspace

*Clarifier Solids Removal Efficiency

Use 0.7 EPA (Water 9) default value

*Waterfall drop height (cm)

Waterfall distance set to 0. (Jill Merrill 12/97)

*Clarifier Weir/Circumference

Set to 0 (Jill Merrill 12/97)

Table 8-2. 2018 Potential Emissions Inventory, Wastewater Treatment Plant
Koppers Inc., Follansbee Tar Plant, Follansbee, West Virginia

Compound	WATER 9 Output - Emissions Total Wastewater Emissions (lb/day)	Potential Emissions (lb/yr)	(tons/yr)
VOC's		3,819.5	1.910
Benzene	**0.86115**	314.3	0.157
o-Cresol (2-Methylphenol)	**0.00031**	0.1	0.000
p-Cresol (4-Methylphenol)	**0.00031**	0.1	0.000
Dibenzofuran	**0.01627**	5.9	0.003
Ethylbenzene	**0.06292**	23.0	0.011
Naphthalene	**3.08692**	1,126.7	0.563
Phenol	**0.00144**	0.5	0.000
Styrene	**1.53685**	561.0	0.280
Toluene	**0.28360**	103.5	0.052
Xylenes (total)	**0.02640**	9.6	0.005
Acenaphthene (POM)	**0.17651**	64.4	0.032
Acenaphthylene (POM)	**0.00376**	1.4	0.001
Anthracene (POM)	**0.66346**	242.2	0.121
Carbozole	**1.72073**	628.1	0.314
2,4-Dimethylphenol	**0.03624**	13.2	0.007
Fluoranthene (PAC) (POM)	**1.56511**	571.3	0.286
Fluorene (POM)	**0.02176**	7.9	0.004
2-Methylnaphthalene	**0.02188**	8.0	0.004
Phenanthrene (POM)	**0.37740**	137.8	0.069
Pyrene (POM)	**0.00000**	0.0	0.000
Benzo(a)anthracene (POM)(PAC)	**0.00106**	0.4	0.000
Chrysene (POM)(PAC)	**0.00035**	0.1	0.000
Total HAP	8.68558	3,170.2	1.585
Total POM	5.91260	2,158.1	1.079

Table 9-1. Assumptions for the 2018 Potential Emissions Inventory, Slop Conveyor and Recycling
Koppers Inc., Follansbee Tar Plant, Follansbee, West Virginia

Slop from tank bottoms will be recycled to Tanks 406/407. A conveyor will be used to transfer the solid material to the tanks. The material will be then heated and loaded with PSB.

Maximum Throughput	50	tons/hr		
Maximum Material Recycled:	1,000,000	gallons/yr,	5,000	tons/yr
Assume Average Density of:	10.0	lb/gal		

Emission points:

* Two drop points of solid slop material (composition assumed to be PSB): one onto the conveyor and one into the tank.
* Heatup of slop from 68.0 F to 270.0 F
* Product Loading of Additional Slop — Controls: Flare, Thermal Oxidizer; Efficiency: 98 %

Solid Pitch will be recycled to Pitch Tanks. A conveyor will be used to transfer the solid material to the tanks.

Maximum Throughput	50	tons/hr		
Maximum Material Recycled:	100,000	gallons/yr,	500	tons/yr
Assume Average Density of:	10.0	lb/gal		

Emission points:

* Two drop points of solid pitch material (composition taken as max of Coal Tar Pitch, Type A Pitch, and Petro Pitch): one onto the conveyor and one into the tank.
* Product Loading of Additional Pitch — Loading Temp: 500 F; Controls: Scrubber E; Efficiency: 80 %

No heatup of pitch calculated. Pitch will be loaded into tanks containing hot pitch. A cooling effect will take place. These emissions are assumed negligible.

Table 9-2. 2018 Potential Emissions Inventory, Slop and Pitch Conveyor and Recycling, Summary
Koppers Inc., Follansbee Tar Plant, Follansbee, West Virginia

	Potential Emissions								
	Slop Recycling				Pitch Recycling				
Constitient	Solid Material Handling (tons/yr)	Heating Losses (tons/yr)	Additional PSB Product Loading (tons/yr)	TOTAL (tons/yr)	Solid Material Handling (tons/yr)	Displacement Losses (tons/yr)	Additional Pitch Product Loading (tons/yr)	TOTAL (tons/yr)	TOTAL (tons/yr)
PM	0.025			0.025	0.003			0.003	0.028
PM-10	0.012			0.012	0.001			0.001	0.013
PM2.5	0.004			0.004	0.000			0.000	0.004
VOC		0.000	0.001	0.002		0.003	0.004	0.007	0.009
Benzene	0.000	0.000	0.000	0.000	0.000	0.000	0.000	0.000	0.000
Biphenyl	0.000	0.000	0.000	0.000	0.000	0.000	0.000	0.000	0.000
m-Cresol	0.000	0.000	0.000	0.000	0.000	0.000	0.000	0.000	0.000
o-Cresol	0.000	0.000	0.000	0.000	0.000	0.000	0.000	0.000	0.000
p-Cresol	0.000	0.000	0.000	0.000	0.000	0.000	0.000	0.000	0.000
Cumene	0.000	0.000	0.000	0.000	0.000	0.000	0.000	0.000	0.000
Dibenzofuran	0.000	0.000	0.000	0.000	0.000	0.000	0.001	0.001	0.001
Ethylbenzene	0.000	0.000	0.000	0.000	0.000	0.000	0.000	0.000	0.000
Naphthalene	0.000	0.000	0.001	0.001	0.000	0.000	0.000	0.000	0.001
Phenol	0.000	0.000	0.000	0.000	0.000	0.000	0.000	0.000	0.000
Quinoline	0.000	0.000	0.000	0.000	0.000	0.000	0.000	0.000	0.000
Styrene	0.000	0.000	0.000	0.000	0.000	0.000	0.000	0.000	0.000
Toluene	0.000	0.000	0.000	0.000	0.000	0.000	0.000	0.000	0.000
m-Xylene	0.000	0.000	0.000	0.000	0.000	0.000	0.000	0.000	0.000
o-Xylene	0.000	0.000	0.000	0.000	0.000	0.000	0.000	0.000	0.000
p-Xylene	0.000	0.000	0.000	0.000	0.000	0.000	0.000	0.000	0.000
Acenaphthene	0.000	0.000	0.000	0.000	0.000	0.002	0.002	0.004	0.004
Acenaphthylene	0.000	0.000	0.000	0.000	0.000	0.000	0.000	0.000	0.000
Anthracene	0.000	0.000	0.000	0.000	0.000	0.000	0.000	0.000	0.001
Benzo(a)anthracene	0.000	0.000	0.000	0.000	0.000	0.000	0.000	0.000	0.000
Benzo(b)fluoranthene	0.000	0.000	0.000	0.000	0.000	0.000	0.000	0.000	0.000
Benzo(k)fluoranthene	0.000	0.000	0.000	0.000	0.000	0.000	0.000	0.000	0.000
Benzo(g,h,i)perylene	0.000	0.000	0.000	0.000	0.000	0.000	0.000	0.000	0.000
Benzo(a)pyrene	0.000	0.000	0.000	0.000	0.000	0.000	0.000	0.000	0.000
Chrysene	0.000	0.000	0.000	0.000	0.000	0.000	0.000	0.000	0.000
Dibenzo(a,h)anthracene	0.000	0.000	0.000	0.000	0.000	0.000	0.000	0.000	0.000
Fluoranthene	0.001	0.000	0.000	0.001	0.000	0.000	0.000	0.001	0.001
Fluorene	0.000	0.000	0.000	0.000	0.000	0.001	0.001	0.001	0.002
Indeno(1,2,3-cd)pyrene	0.000	0.000	0.000	0.000	0.000	0.000	0.000	0.000	0.000
Phenanthrene	0.001	0.000	0.000	0.001	0.000	0.000	0.001	0.001	0.002
Pyrene	0.000	0.000	0.000	0.000	0.000	0.000	0.000	0.000	0.001
TOTAL HAP	0.003	0.000	0.001	0.005	0.000	0.003	0.004	0.007	0.012
TOTAL POM	0.003	0.000	0.001	0.005	0.000	0.003	0.005	0.009	0.013

Table 9-3. 2018 Potential Emissions Inventory, Slop and Pitch Conveyor and Recycling, Conveyor Drop Points and Solid Filling
Koppers Inc., Follansbee Tar Plant, Follansbee, West Virginia

Slop Recycling

Maximum Throughput 50 tons/hr
Maximum Throughput 1,000,000 gallons/yr, 5,000 tons/yr
Assume Average Density of: 10 lb/gal

Constiuent	Emission Factor (lb/ton)[1]	Weight Percent in Slop[2]	Potential Emissions[3] (lb/hr)	(lbs/yr)	(tons/yr)
PM	0.00508	-	0.5084	50.8436	0.025
PM-10	0.00240	-	0.2405	24.0476	0.012
PM2.5	0.00076	-	0.0756	7.5578	0.004
Benzene		0.00	0.0000	0.0000	0.000
Biphenyl		0.03	0.0002	0.0153	0.000
m-Cresol		0.00	0.0000	0.0000	0.000
o-Cresol		0.00	0.0000	0.0000	0.000
p-Cresol		0.00	0.0000	0.0000	0.000
Cumene		0.00	0.0000	0.0000	0.000
Dibenzofuran		0.58	0.0029	0.2949	0.000
Ethylbenzene		0.00	0.0000	0.0000	0.000
Naphthalene		1.05	0.0053	0.5339	0.000
Phenol		0.00	0.0000	0.0000	0.000
Quinoline		0.02	0.0001	0.0102	0.000
Styrene		0.00	0.0000	0.0000	0.000
Toluene		0.00	0.0000	0.0000	0.000
m-Xylene		0.00	0.0000	0.0000	0.000
o-Xylene		0.00	0.0000	0.0000	0.000
p-Xylene		0.00	0.0000	0.0000	0.000
Acenaphthene		0.62	0.0032	0.3152	0.000
Acenaphthylene		0.02	0.0001	0.0102	0.000
Anthracene		0.87	0.0044	0.4423	0.000
Benzo(a)anthracene		0.76	0.0039	0.3864	0.000
Benzo(b)fluoranthene		0.38	0.0019	0.1932	0.000
Benzo(k)fluoranthene		0.30	0.0015	0.1525	0.000
Benzo(g,h,i)perylene		0.57	0.0029	0.2898	0.000
Benzo(a)pyrene		0.61	0.0031	0.3101	0.000
Chrysene		0.66	0.0034	0.3356	0.000
Dibenzo(a,h)anthracene		0.09	0.0005	0.0458	0.000
Fluoranthene		2.07	0.0105	1.0525	0.001
Fluorene		0.61	0.0031	0.3101	0.000
Indeno(1,2,3-cd)pyrene		0.69	0.0035	0.3508	0.000
Phenanthrene		2.37	0.0120	1.2050	0.001
Pyrene		1.39	0.0071	0.7067	0.000
TOTAL HAP			**0.06960**	**6.96048**	**0.003**

[1] Emission Factors taken from AP-42, Section 13.2.4 *"Aggregate Handling and Storage Piles"*, 11/06

$E = k\,(0.0032)*(U/5)^{1.3}/(M/2)^{1.4}$

E = Emission factor (lb/ton)

k = particle size multiplier	PM	0.74
	PM-10	0.35
	PM-2.5	0.11
U = mean wind speed, (mph)		9 mph
M = material moisture content (%)		2 %

[2] Slop is assumed to have the same composition as pavement sealer base.

[3] There are two drop points of solid material, one onto the conveyor and one into the tank. Therefore, the particulate emissions were multipled by 2

Pitch Recycling

Maximum Throughput 50 tons/hr
Maximum Throughput 100,000 gallons/yr, 500 tons/yr
Assume Average Density of: 10 lb/gal

		Coal Tar Pitch				Type A Pitch				Petro Pitch				Max Pitch Potential Emissions
Constiuent	Emission Factor (lb/ton)[1]	Weight Percent in Pitch	Potential Emissions[3] (lb/hr)	(lbs/yr)	(tons/yr)	Weight Percent in Pitch	Potential Emissions[3] (lb/hr)	(lbs/yr)	(tons/yr)	Weight Percent in Pitch	Potential Emissions[3] (lb/hr)	(lbs/yr)	(tons/yr)	(tons/yr)
PM	0.00508	-	0.5084	0.5844	0.003	-	0.5084	5.0844	0.003	-	0.5084	5.0844	0.003	0.003
PM-10	0.00240	-	0.2405	2.4048	0.001	-	0.2405	2.4048	0.001	-	0.2405	2.4048	0.001	0.001
PM2.5	0.00076	-	0.0756	0.7558	0.000	-	0.0756	0.7558	0.000	-	0.0756	0.7558	0.000	0.000
Benzene		0.00	0.0000	0.0000	0.000	0.00	0.0000	0.0000	0.000	0.00	0.0000	0.0000	0.000	0.000
Biphenyl		0.00	0.0000	0.0000	0.000	0.00	0.0000	0.0000	0.000	0.00	0.0000	0.0000	0.000	0.000
m-Cresol		0.00	0.0000	0.0000	0.000	0.00	0.0000	0.0000	0.000	0.00	0.0000	0.0000	0.000	0.000
o-Cresol		0.00	0.0000	0.0000	0.000	0.00	0.0000	0.0000	0.000	0.00	0.0000	0.0000	0.000	0.000
p-Cresol		0.00	0.0000	0.0000	0.000	0.00	0.0000	0.0000	0.000	0.00	0.0000	0.0000	0.000	0.000
Cumene		0.00	0.0000	0.0000	0.000	0.00	0.0000	0.0000	0.000	0.00	0.0000	0.0000	0.000	0.000
Dibenzofuran		0.12	0.0006	0.0061	0.000	0.00	0.0000	0.0000	0.000	0.00	0.0000	0.0000	0.000	0.000
Ethylbenzene		0.00	0.0000	0.0000	0.000	0.00	0.0000	0.0000	0.000	0.00	0.0000	0.0000	0.000	0.000
Naphthalene		0.00	0.0000	0.0000	0.000	0.00	0.0000	0.0000	0.000	0.00	0.0000	0.0000	0.000	0.000
Phenol		0.00	0.0000	0.0000	0.000	0.00	0.0000	0.0000	0.000	0.00	0.0000	0.0000	0.000	0.000
Quinoline		0.00	0.0000	0.0000	0.000	0.00	0.0000	0.0000	0.000	0.00	0.0000	0.0000	0.000	0.000
Styrene		0.00	0.0000	0.0000	0.000	0.00	0.0000	0.0000	0.000	0.00	0.0000	0.0000	0.000	0.000
Toluene		0.00	0.0000	0.0000	0.000	0.00	0.0000	0.0000	0.000	0.00	0.0000	0.0000	0.000	0.000
m-Xylene		0.00	0.0000	0.0000	0.000	0.00	0.0000	0.0000	0.000	0.00	0.0000	0.0000	0.000	0.000
o-Xylene		0.00	0.0000	0.0000	0.000	0.00	0.0000	0.0000	0.000	0.00	0.0000	0.0000	0.000	0.000
p-Xylene		0.00	0.0000	0.0000	0.000	0.00	0.0000	0.0000	0.000	0.00	0.0000	0.0000	0.000	0.000
Acenaphthene		0.08	0.0004	0.0041	0.000	0.00	0.0000	0.0000	0.000	0.32	0.0016	0.0163	0.000	0.000
Acenaphthylene		0.00	0.0000	0.0000	0.000	0.00	0.0000	0.0000	0.000	0.00	0.0000	0.0000	0.000	0.000
Anthracene		0.15	0.0008	0.0076	0.000	0.06	0.0003	0.0031	0.000	0.19	0.0010	0.0097	0.000	0.000
Benzo(a)anthracene		0.67	0.0034	0.0341	0.000	0.20	0.0010	0.0102	0.000	0.15	0.0008	0.0076	0.000	0.000
Benzo(b)fluoranthene		1.48	0.0075	0.0752	0.000	0.23	0.0012	0.0117	0.000	0.03	0.0002	0.0015	0.000	0.000
Benzo(k)fluoranthene		0.52	0.0026	0.0264	0.000	0.20	0.0010	0.0102	0.000	0.02	0.0001	0.0010	0.000	0.000
Benzo(g,h,i)perylene		1.13	0.0057	0.0575	0.000	0.33	0.0017	0.0168	0.000	0.00	0.0000	0.0000	0.000	0.000
Benzo(a)pyrene		1.27	0.0065	0.0646	0.000	0.37	0.0019	0.0188	0.000	0.14	0.0007	0.0071	0.000	0.000
Chrysene		0.75	0.0038	0.0381	0.000	0.22	0.0011	0.0112	0.000	0.21	0.0011	0.0107	0.000	0.000
Dibenzo(a,h)anthracene		1.21	0.0062	0.0615	0.000	0.09	0.0005	0.0046	0.000	0.00	0.0000	0.0000	0.000	0.000
Fluoranthene		0.74	0.0038	0.0376	0.000	0.25	0.0013	0.0127	0.000	0.21	0.0011	0.0107	0.000	0.000
Fluorene		0.01	0.0001	0.0005	0.000	0.02	0.0001	0.0010	0.000	0.19	0.0010	0.0097	0.000	0.000
Indeno(1,2,3-cd)pyrene		0.21	0.0011	0.0107	0.000	0.07	0.0004	0.0036	0.000	0.00	0.0000	0.0000	0.000	0.000
Phenanthrene		0.14	0.0007	0.0071	0.000	0.15	0.0008	0.0076	0.000	0.44	0.0022	0.0224	0.000	0.000
Pyrene		0.67	0.0034	0.0341	0.000	0.31	0.0016	0.0158	0.000	0.46	0.0023	0.0234	0.000	0.000
TOTAL HAP			**0.04652**	**0.46522**	**0.000**		**0.01271**	**0.12711**	**0.000**		**0.01200**	**0.11999**	**0.000**	0.000

Table 9-4. 2018 Potential Emissions Inventory, Slop and Pitch Conveyor and Recycling, Heat-up of Slop
Koppers Inc., Follansbee Tar Plant, Follansbee, West Virginia

Emission Approach and Input Data

$E = (P_{iT1}/Pa_1 + P_{iT2}/Pa_2)/2 \times Delta(n) \times MWi$

E = Mass of emissions emitted from heating

P_{iT1} = Partial pressure of constituent in aqueous solution at initial temperature

P_{iT2} = Partial pressure of constiuent in aqueous solution at final temperature

Pa_1 = Initial noncondensable gas pressure in the vessel

Pa_2 = Final noncondensable gas pressure in the vessel

Delta(n) = Number of moles of noncondensable gas displaced

MWi = Molecular weight of constituent

$Delta(n) = V/R[(P_{a1}/T_1) - (P_{a2}/T_2)]$

V = Volume of free space in vessel

Tank Diamter = 12 ft

Tank Length = 27 ft

Assume tank 1/2 full. Therefore, V = 1,527 cf/cycle

Assume it takes 4 hours to heat a vessel

Total throughout = 1,000,000 gal/yr, or 133,681 cf/yr

87.56 cycles/year

R = Ideal Gas Law = 10.731 psi-cf/lb-mole-R

T1 = Initital Temperature = 68 F, or 528 R

T2 = Final Temperature = 270 F, or 730 R

$Pa_1 = 14.7 - \sum P_{iT1}$ Controls: Flare, Thermal Oxidizer

$Pa_2 = 14.7 - \sum P_{iT2}$ Efficiency: 98 %

Calculations

Constituent	MWi (lb/mol)	P_{iT1} (psia)	P_{iT2} (psia)	Slop (lbs/cycle)	E (lb/hr)	(lb/yr)	(ton/yr)
		Pa_1 =	14.6999				
		Pa_2 =	14.6583				
		Delta(n) =	1.1042				
VOC	134.30	0.0001	0.0417	0.0042	0.0011	0.3708	0.0002
Benzene	78.10	0.00E+00	0.00E+00	0.0000	0.0000	0.0000	0.0000
Biphenyl	154.20	1.67E-07	1.71E-04	0.0000	0.0000	0.0017	0.0000
m-Cresol	108.10	0.00E+00	0.00E+00	0.0000	0.0000	0.0000	0.0000
o-Cresol	108.10	0.00E+00	0.00E+00	0.0000	0.0000	0.0000	0.0000
p-Cresol	108.10	0.00E+00	0.00E+00	0.0000	0.0000	0.0000	0.0000
Cumene	120.20	0.00E+00	0.00E+00	0.0000	0.0000	0.0000	0.0000
Dibenzofuran	168.20	3.57E-07	7.22E-04	0.0001	0.0000	0.0080	0.0000
Ethylbenzene	106.20	0.00E+00	0.00E+00	0.0000	0.0000	0.0000	0.0000
Naphthalene	128.20	9.97E-05	3.18E-02	0.0031	0.0008	0.2700	0.0001
Phenol	94.10	0.00E+00	0.00E+00	0.0000	0.0000	0.0000	0.0000
Quinoline	129.20	6.77E-07	2.97E-04	0.0000	0.0000	0.0025	0.0000
Styrene	104.20	0.00E+00	0.00E+00	0.0000	0.0000	0.0000	0.0000
Toluene	92.10	0.00E+00	0.00E+00	0.0000	0.0000	0.0000	0.0000
m-Xylene	106.20	0.00E+00	0.00E+00	0.0000	0.0000	0.0000	0.0000
o-Xylene	106.20	0.00E+00	0.00E+00	0.0000	0.0000	0.0000	0.0000
p-Xylene	106.20	0.00E+00	0.00E+00	0.0000	0.0000	0.0000	0.0000
Acenaphthene	154.20	4.11E-06	2.49E-03	0.0003	0.0001	0.0254	0.0000
Acenaphthylene	152.20	1.34E-07	8.14E-05	0.0000	0.0000	0.0008	0.0000
Anthracene	178.20	3.89E-08	1.40E-04	0.0000	0.0000	0.0016	0.0000
Benzo(a)anthracene	228.30	8.60E-11	2.10E-06	0.0000	0.0000	0.0000	0.0000
Benzo(b)fluoranthene	252.30	2.74E-11	5.21E-07	0.0000	0.0000	0.0000	0.0000
Benzo(k)fluoranthene	252.30	3.47E-14	1.23E-08	0.0000	0.0000	0.0000	0.0000
Benzo(g,h,i)perylene	276.30	5.93E-15	4.81E-09	0.0000	0.0000	0.0000	0.0000
Benzo(a)pyrene	252.30	4.27E-13	5.78E-08	0.0000	0.0000	0.0000	0.0000
Chrysene	228.20	5.63E-13	1.19E-07	0.0000	0.0000	0.0000	0.0000
Dibenzo(a,h)anthracene	278.40	4.82E-16	4.07E-10	0.0000	0.0000	0.0000	0.0000
Fluoranthene	202.30	1.88E-07	3.10E-04	0.0000	0.0000	0.0041	0.0000
Fluorene	166.20	1.35E-06	1.15E-03	0.0001	0.0000	0.0126	0.0000
Indeno(1,2,3-cd)pyrene	276.30	7.34E-15	4.11E-09	0.0000	0.0000	0.0000	0.0000
Phenanthrene	178.20	1.07E-07	4.33E-04	0.0001	0.0000	0.0051	0.0000
Pyrene	202.30	1.15E-09	1.59E-05	0.0000	0.0000	0.0002	0.0000
TOTAL HAP					0.0009	0.3322	0.0002

Note: Pitch Recycling has no "Heating Emissions" because it is considered a cooling operation

Table 9-5. 2018 Potential Emissions Inventory, Slop and Pitch Conveyor and Recycling, Addition of Solid Pitch to Heated Pitch Tanks
Koppers Inc., Follansbee Tar Plant, Follansbee, West Virginia

Emissions Approach

$E = V/RT \times \sum(Pi)(MWi)$ (from 63.1365(c)(2))

E = Mass of constituent emitted
V = Volume of gas displaced from the vessel
R = Ideal gas law constant = 10.731 psia-cf/ mol-R
T = Temperature of the vessel vapor space (absolute), assumed to be loading temperature
Pi = Partial pressure of the individual constituent
MWi = Molecular weight of the individual constituent

Input Data

Pitch Data

Quantity Loaded =	100,000	gal/yr, or	13,368 cf/yr
Loading Temperature =	500	F, or	960 R
Controls:	Scrubber E		
Efficiency:	80	%	

	Coal Tar Pitch				Type A Pitch				Petro/Decanted Oil Pitch				
Constituent	MWi (lb/mol)	Pi (psia)	(Pi)(MWi) (psia-lb/mol)	E (tons/yr)	MWi (lb/mol)	Pi (psia)	(Pi)(MWi) (psia-lb/mol)	E (tons/yr)	MWi (lb/mol)	Pi (psia)	(Pi)(MWi) (psia-lb/mol)	E (tons/yr)	E Max (tons/yr)
VOC	177.55	6.92E-02	12.2904	0.002	187.78	1.92E-02	3.6015	0.000	162.95	1.39E-01	22.6910	0.003	0.003
Benzene	78.10	0.00E+00	0.0000	0.000	78.10	0.00E+00	0.0000	0.000	78.10	0.00E+00	0.0000	0.000	0.000
Biphenyl	154.20	0.00E+00	0.0000	0.000	154.20	0.00E+00	0.0000	0.000	154.20	0.00E+00	0.0000	0.000	0.000
m-Cresol	108.10	0.00E+00	0.0000	0.000	108.10	0.00E+00	0.0000	0.000	108.10	0.00E+00	0.0000	0.000	0.000
o-Cresol	108.10	0.00E+00	0.0000	0.000	108.10	0.00E+00	0.0000	0.000	108.10	0.00E+00	0.0000	0.000	0.000
p-Cresol	108.10	0.00E+00	0.0000	0.000	108.10	0.00E+00	0.0000	0.000	108.10	0.00E+00	0.0000	0.000	0.000
Dibenzofuran	168.20	1.92E-02	3.2244	0.000	168.20	0.00E+00	0.0000	0.000	168.20	0.00E+00	0.0000	0.000	0.000
Naphthalene	128.20	0.00E+00	0.0000	0.000	128.20	0.00E+00	0.0000	0.000	128.20	0.00E+00	0.0000	0.000	0.000
Phenol	94.10	0.00E+00	0.0000	0.000	94.10	0.00E+00	0.0000	0.000	94.10	0.00E+00	0.0000	0.000	0.000
Quinoline	129.20	0.00E+00	0.0000	0.000	129.20	0.00E+00	0.0000	0.000	129.20	0.00E+00	0.0000	0.000	0.000
Acenaphthene	154.20	1.94E-02	2.9881	0.000	154.20	0.00E+00	0.0000	0.000	154.20	8.18E-02	12.6064	0.002	0.002
Acenaphthylene	152.20	0.00E+00	0.0000	0.000	152.20	0.00E+00	0.0000	0.000	152.20	0.00E+00	0.0000	0.000	0.000
Anthracene	178.20	4.42E-03	0.7884	0.000	178.20	1.86E-03	0.3313	0.000	178.20	5.91E-03	1.0533	0.000	0.000
Benzo(a)anthracene	228.30	1.13E-03	0.2588	0.000	228.30	3.55E-04	0.0811	0.000	228.30	2.68E-04	0.0611	0.000	0.000
Benzo(b)fluoranthene	252.30	1.06E-03	0.2672	0.000	252.30	1.73E-04	0.0436	0.000	252.30	2.26E-05	0.0057	0.000	0.000
Benzo(k)fluoranthene	252.30	6.95E-05	0.0175	0.000	252.30	2.81E-05	0.0071	0.000	252.30	2.82E-06	0.0007	0.000	0.000
Benzo(g,h,i)perylene	276.30	5.20E-05	0.0144	0.000	276.30	1.60E-05	0.0044	0.000	276.30	0.00E+00	0.0000	0.000	0.000
Benzo(a)pyrene	252.30	2.14E-04	0.0541	0.000	252.30	6.56E-05	0.0166	0.000	252.30	2.49E-05	0.0063	0.000	0.000
Chrysene	228.30	3.20E-04	0.0731	0.000	228.30	9.87E-05	0.0225	0.000	228.30	9.46E-05	0.0216	0.000	0.000
Dibenzo(a,h)anthracene	278.40	3.07E-05	0.0086	0.000	278.40	2.40E-06	0.0007	0.000	278.40	0.00E+00	0.0000	0.000	0.000
Fluoranthene	202.30	1.25E-02	2.5364	0.000	202.30	4.45E-03	0.9001	0.000	202.30	3.75E-03	0.7592	0.000	0.000
Fluorene	166.20	1.40E-03	0.2335	0.000	166.20	2.95E-03	0.4905	0.000	166.20	2.82E-02	4.6786	0.001	0.001
Indeno(1,2,3-cd)pyrene	276.30	5.42E-06	0.0015	0.000	276.30	1.90E-06	0.0005	0.000	276.30	0.00E+00	0.0000	0.000	0.000
Phenanthrene	178.20	5.09E-03	0.9066	0.000	178.20	5.73E-03	1.0204	0.000	178.20	1.69E-02	3.0053	0.000	0.000
Pyrene	202.30	3.29E-03	0.6649	0.000	202.30	1.60E-03	0.3231	0.000	202.30	2.38E-03	0.4815	0.000	0.000
TOTAL HAP				0.002				0.000				0.003	0.003
TOTAL POM				0.002				0.000				0.003	0.003

Table 9-6. 2018 Potential Emissions Inventory, Slop and Pitch Conveyor and Recycling, Product Loading of Slop and Pitch
Koppers Inc., Follansbee Tar Plant, Follansbee, West Virginia

Commodity	Temperature (°F)	(°R)	Loading Vehicle	Molecular Weight (lb/lb-mole)	Vapor Pressure (psia)	Saturation Factor	Emission Factor[1] lb/Mgal	Potential Throughput (gal/hr)	(gal/yr)	Constituent	% weight in vapors	Potential Emissions (lb/hr)	ton/yr
Slop/PSB Additional	270	730	Truck or Railcar	134.30	0.0417	1.45	0.139	30,000	1,000,000	VOC	100.000	0.083	0.001
Control:	Flare, Thermal Oxidizer									Benzene	0.00	0.000	0.000
	98 %									Biphenyl	0.47	0.000	0.000
										m-Cresol	0.00	0.000	0.000
										o-Cresol	0.00	0.000	0.000
										p-Cresol	0.00	0.000	0.000
										Cumene	0.00	0.000	0.000
										Dibenzofuran	2.17	0.002	0.000
										Ethylbenzene	0.00	0.000	0.000
										Naphthalene	72.78	0.061	0.001
										Phenol	0.00	0.000	0.000
										Quinoline	0.68	0.001	0.000
										Styrene	0.00	0.000	0.000
										Toluene	0.00	0.000	0.000
										m-Xylene	0.00	0.000	0.000
										o-Xylene	0.00	0.000	0.000
										p-Xylene	0.00	0.000	0.000
										Acenaphthene	6.85	0.006	0.000
										Acenaphthylene	0.22	0.000	0.000
										Anthracene	0.44	0.000	0.000
										Benzo(a)anthracene	0.01	0.000	0.000
										Benzo(b)fluoranthene	0.00	0.000	0.000
										Benzo(k)fluoranthene	0.00	0.000	0.000
										Benzo(g,h,i)perylene	0.00	0.000	0.000
										Benzo(a)pyrene	0.00	0.000	0.000
										Chrysene	0.00	0.000	0.000
										Dibenzo(a,h)anthracene	0.00	0.000	0.000
										Fluoranthene	1.12	0.001	0.000
										Fluorene	3.40	0.003	0.000
										Indeno(1,2,3-cd)pyrene	0.00	0.000	0.000
										Phenanthrene	1.38	0.001	0.000
										Pyrene	0.06	0.000	0.000
										Total HAP		0.075	0.001
Coal Tar Pitch Additional	500	960	Truck or Railcar	177.55	0.0692	1.45	0.231	30,000	100,000	VOC	100.000	1.386	0.002
Control:	Scrubber E									Benzene	0.00	0.000	0.000
	80 %									Biphenyl	0.00	0.000	0.000
										m-Cresol	0.00	0.000	0.000
										o-Cresol	0.00	0.000	0.000
										p-Cresol	0.00	0.000	0.000
										Cumene	0.00	0.000	0.000
										Dibenzofuran	26.24	0.364	0.001
										Ethylbenzene	0.00	0.000	0.000
										Naphthalene	0.00	0.000	0.000
										Phenol	0.00	0.000	0.000
										Quinoline	0.00	0.000	0.000
										Styrene	0.00	0.000	0.000
										Toluene	0.00	0.000	0.000
										m-Xylene	0.00	0.000	0.000
										o-Xylene	0.00	0.000	0.000
										p-Xylene	0.00	0.000	0.000
										Acenaphthene	24.31	0.337	0.001
										Acenaphthylene	0.00	0.000	0.000
										Anthracene	6.41	0.089	0.000
										Benzo(a)anthracene	2.11	0.029	0.000
										Benzo(b)fluoranthene	2.17	0.030	0.000
										Benzo(k)fluoranthene	0.14	0.002	0.000
										Benzo(g,h,i)perylene	0.12	0.002	0.000
										Benzo(a)pyrene	0.44	0.006	0.000
										Chrysene	0.59	0.008	0.000
										Dibenzo(a,h)anthracene	0.07	0.001	0.000
										Fluoranthene	20.64	0.286	0.000
										Fluorene	1.90	0.026	0.000
										Indeno(1,2,3-cd)pyrene	0.01	0.000	0.000
										Phenanthrene	7.38	0.102	0.000
										Pyrene	5.41	0.075	0.000
										Total HAP		1.357	0.002

Table 9-6. 2018 Potential Emissions Inventory, Slop and Pitch Conveyor and Recycling, Product Loading of Slop and Pitch
Koppers Inc., Follansbee Tar Plant, Follansbee, West Virginia

Commodity	Temperature (°F)	(°R)	Loading Vehicle	Molecular Weight (lb/lb-mole)	Vapor Pressure (psia)	Saturation Factor	Emission Factor[1] lb/Mgal	Potential Throughput (gal/hr)	(gal/yr)	Constituent	% weight in vapors	Potential Emissions (lb/hr)	ton/yr
Type A Pitch Additional	500	960	Truck or Railcar	187.78	0.0192	1.45	0.068	50,000	100,000	VOC	100.000	0.408	0.001
Control:	Scrubber E									Benzene	0.00	0.000	0.000
	80 %									Biphenyl	0.00	0.000	0.000
										m-Cresol	0.00	0.000	0.000
										o-Cresol	0.00	0.000	0.000
										p-Cresol	0.00	0.000	0.000
										Cumene	0.00	0.000	0.000
										Dibenzofuran	0.00	0.000	0.000
										Ethylbenzene	0.00	0.000	0.000
										Naphthalene	0.00	0.000	0.000
										Phenol	0.00	0.000	0.000
										Quinoline	0.00	0.000	0.000
										Styrene	0.00	0.000	0.000
										Toluene	0.00	0.000	0.000
										m-Xylene	0.00	0.000	0.000
										o-Xylene	0.00	0.000	0.000
										p-Xylene	0.00	0.000	0.000
										Acenaphthene	0.00	0.000	0.000
										Acenaphthylene	0.00	0.000	0.000
										Anthracene	9.20	0.038	0.000
										Benzo(a)anthracene	2.25	0.009	0.000
										Benzo(b)fluoranthene	1.21	0.005	0.000
										Benzo(k)fluoranthene	0.20	0.001	0.000
										Benzo(g,h,i)perylene	0.12	0.000	0.000
										Benzo(a)pyrene	0.46	0.002	0.000
										Chrysene	0.63	0.003	0.000
										Dibenzo(a,h)anthracene	0.02	0.000	0.000
										Fluoranthene	24.99	0.102	0.000
										Fluorene	13.62	0.056	0.000
										Indeno(1,2,3-cd)pyrene	0.01	0.000	0.000
										Phenanthrene	28.33	0.116	0.000
										Pyrene	8.97	0.037	0.000
										Total HAP		0.367	0.001
Petro Pitch Additional	500	960	Truck or Railcar	162.95	0.1393	1.45	0.427	50,000	100,000	VOC	100.000	2.562	0.004
Control:	Scrubber E									Benzene	0.00	0.000	0.000
	80 %									Biphenyl	0.00	0.000	0.000
										m-Cresol	0.00	0.000	0.000
										o-Cresol	0.00	0.000	0.000
										p-Cresol	0.00	0.000	0.000
										Cumene	0.00	0.000	0.000
										Dibenzofuran	0.00	0.000	0.000
										Ethylbenzene	0.00	0.000	0.000
										Naphthalene	0.00	0.000	0.000
										Phenol	0.00	0.000	0.000
										Quinoline	0.00	0.000	0.000
										Styrene	0.00	0.000	0.000
										Toluene	0.00	0.000	0.000
										m-Xylene	0.00	0.000	0.000
										o-Xylene	0.00	0.000	0.000
										p-Xylene	0.00	0.000	0.000
										Acenaphthene	55.56	1.423	0.002
										Acenaphthylene	0.00	0.000	0.000
										Anthracene	4.64	0.119	0.000
										Benzo(a)anthracene	0.27	0.007	0.000
										Benzo(b)fluoranthene	0.03	0.001	0.000
										Benzo(k)fluoranthene	0.00	0.000	0.000
										Benzo(g,h,i)perylene	0.00	0.000	0.000
										Benzo(a)pyrene	0.03	0.001	0.000
										Chrysene	0.10	0.002	0.000
										Dibenzo(a,h)anthracene	0.00	0.000	0.000
										Fluoranthene	3.35	0.086	0.000
										Fluorene	20.62	0.528	0.001
										Indeno(1,2,3-cd)pyrene	0.00	0.000	0.000
										Phenanthrene	13.24	0.339	0.001
										Pyrene	2.12	0.054	0.000
										Total HAP		2.561	0.004

Table 10-1. Assumptions for the 2018 Potential Emissions Inventory, Miscellaneous Sources
Koppers Inc., Follansbee Tar Plant, Follansbee, West Virginia

Paved Roadways

Distance Round Trip (into/out of plant): 1.0 mile

Potential Vehicle Miles Traveled

Truck Capacity: 7,000 gal

Material		Potential Receipt/Loadout	Potential Trucks/yr	Potential VMT/yr
Petro Tar	Receipt	30,000,000 gal/yr	4,286 truck/yr	4,286 VMT
Crude Tar	Load-out	3,000,000 gal/yr	429 truck/yr	429 VMT
Pitch	Load-out	55,000,000 gal/yr	7,857 truck/yr	7,857 VMT
PSB	Load-out	15,942,857 gal/yr	2,278 truck/yr	2,278 VMT
			14,849 truck/yr	14,849 VMT

Table 10-2. 2018 Potential Emissions Inventory, Paved Roadways

Koppers Inc., Follansbee Tar Plant, Follansbee, West Virginia

TSP

Paved Road	EMISSIONS ESTIMATION PARAMETERS				EMISSION RATE (lb/VMT)	VEHICLE MILES TRAVELED PER YEAR	UNCONTROLLED ANNUAL EMISSIONS (TONS/YR)	CONTROL EFFICIENCY (%)	CONTROLLED ANNUAL EMISSIONS (TONS/YR)
	k	sL	W	P					
Incoming/Outbound Trucks	0.011	9.7	7.0	150	0.57	14,849	4.23		4.23

PM10

Paved Road	EMISSIONS ESTIMATION PARAMETERS				EMISSION RATE (lb/VMT)	VEHICLE MILES TRAVELED PER YEAR	UNCONTROLLED ANNUAL EMISSIONS (TONS/YR)	CONTROL EFFICIENCY (%)	CONTROLLED ANNUAL EMISSIONS (TONS/YR)
	k	sL	W	P					
Incoming/Outbound Trucks	0.002	9.7	7.0	150	0.11	14,849	0.82		0.82

PM2.5

Paved Road	EMISSIONS ESTIMATION PARAMETERS				EMISSION RATE (lb/VMT)	VEHICLE MILES TRAVELED PER YEAR	UNCONTROLLED ANNUAL EMISSIONS (TONS/YR)	CONTROL EFFICIENCY (%)	CONTROLLED ANNUAL EMISSIONS (TONS/YR)
	k	sL	W	P					
Incoming/Outbound Trucks	0.0005	9.7	7.0	150	0.03	14,849	0.22		0.22

A. Emission factors are derived using the equations and constants contained in AP-42, Section 13.2.1, 1/11, as follows:

$E = [k*(sL)^{0.91}(W)^{1.02}](1-P/4N)$

Where:

E = Emission factor (lb/VMT)

k = particle size multiplier

sL = road surface silt loading

W = mean vehicle weight, tons

P = Number of wet days with at least 0.254 (0.01 in) of precipitation during the averaging period

N = Number of days in averaging period = days