Essroc
Italcementi Group

Essroc Cement Corp.
1826 S Queen St.
Martinsburg, WV 25401

Tel 304-260-1800
essroc.com
us.i-nova.net

July 18, 2016

William F. Durham
Director
WV Department of Environmental Protection
Division of Air Quality
601 57th Street SE
Charleston, WV 25304

Subject: Essroc Cement Corporation – Martinsburg Plant Permit #R30-00300006-2012, Submittal of Title V Permit Renewal Application

Dear Mr. Durham:

Enclosed please find two (2) original copies of the Title V Permit Renewal Application for the Essroc Cement Corporation's Martinsburg Plant. Included with each binder is a compact disk (CD) containing an electronic copy of the Title V Permit Renewal Application as requested in the WV DEP Title V Permit General Instructions. We have also included a signed copy of our PC MACT Notice of Compliance Report.

No confidential business information is being submitted within the Title V Permit Renewal Application.

If you have any questions on this submittal please contact me at 304-260-1827.

Sincerely,

Andrew A. Frye
Environmental Manager
Martinsburg Plant

Cc: H. Knopfel (Essroc)
A. Jones (Essroc)

PC MACT
PM and THC/O-HAP
Notice of Compliance Report

Submitted By:
Essroc Cement Corporation
Martinsburg Plant
1826 S. Queen Street
Martinsburg, WV 25401

July 15, 2016

Table of Contents

1.0 Introduction

Essroc Cement Corporation operates the Martinsburg cement Plant (Plant), which is located in Martinsburg, WV. The Plant is subject to the *National Emission Standards for Hazardous Air Pollutants* from the Portland Cement Manufacturing Industry, specifically 40 CFR 63, Subpart LLL (hereinafter referred to as PC MACT). All requirements of the PC MACT Final Rule, which was published in the Federal Register on February 12, 2013, became effective on September 9, 2015.

Provided below is a discussion of the PC MACT regulated air pollutants assessed as part of this Notification of Compliance (NOC) Report (Report) and the applicable regulatory requirements which require this NOC Report.

1.1 Regulated Air Pollutants Assessed

This Report is being submitted for the following PC MACT regulated air pollutants which are being emitted from the Plant: Particulate Matter (PM) and Total Hydrocarbons (THC).

The PM initial performance test (IPT) for the preheater/precalciner (PH/PC) Kiln System at the Plant must be conducted per 40 CFR 63.1349(b)(1).

Per 40 CFR 63.1349(b)(7), in lieu of conducting the THC IPT specified in 40 CFR 63.1349(b)(4), the Plant may choose to conduct a O-HAPs IPT for the PH/PC Kiln System per 40 CFR 63.1349(b)(7)(i) through (v).

1.2 Regulatory Applicability Requirements

This NOC Report is being submitted in accordance with the requirements of 40 CFR 63.1353(b)(5) and 40 CFR 63.9(h).

2.0 Methods Used to Determine Compliance

The Plant will utilize the following sampling and analytical procedures: 1) EPA 40 CFR 60, Appendix B, Performance Specifications, 2) 40 CFR Part 60, Appendix A, Test Methods, and 3) ASTM Standards. Specific sampling and analytical procedures applicable to the type of the monitoring equipment used by the Plant are listed below.

- Performance Specification 3 - Specifications and Test Procedures for O_2 and CO_2 Continuous Emission Monitoring Systems in Stationary Sources (O_2)
- Performance Specification 6 - Specifications and Test Procedures for Continuous Emission Rate Monitoring Systems in Stationary Sources (Flowrate)
- Performance Specification 8A - Specifications and Test Procedures for Total Hydrocarbon Continuous Monitoring Systems in Stationary Sources - THC
- Method 4 - Determination of moisture content in stack gases
- Method 5 for PM testing
- Methods 18, 25A and EPA 320 used for OHAP testing

3.0 Performance Test Results

The results of the PM and O-HAP IPT were previously submitted to the WV DEP on June 2, 2016. A revised set of data Tables 3 and 4 are provided as Attachment to this report. The revised Tables provide a correction to the amount of clinker produced in metric and short tons as well as the revised Alternate Calculated PM emission limit of 0.118 lbs/short ton of clinker. These results are also summarized in Table 1 on the following page. A copy of the THC CEMS Relative Accuracy Test Audit (RATA) Report was previously submitted to the WV DEP on August 21, 2015.

Table 1
PM and OHAP IPT Results - PH/PC Kiln System

Pollutant	IPT Result	IPT Basis	PC MACT Compliance Limit
Filterable PM	0.030 lb/ton clinker	Average of 3 1-hour performance tests Raw Mill ON (April 6-7, 2016)	Alternative Calculated limit of 0.118 lb/short ton clinker
Filterable PM	0.013 lb/ton clinker	Average of 3 1-hour performance tests Raw Mill OFF (April 6-7, 2016)	Alternative Calculated limit of 0.118 lb/short ton clinker
THC	34.2 ppmw	Site-specific limit parametrically determined based on compliance with Total Organic HAP limit.	Complying with alternate O-HAP limit of 88.13 pppw
Total Organic HAP	4.554 ppmvd corrected to 7% O_2	Average of 3 1-hour performance tests (April 6-7, 2016)	12.0 ppmvd corrected to 7% O_2

4.0 Methods Used for Determining Continuing Compliance

Continuing compliance for the PH/PC Kiln System with respect to its PM limit will be determined through continuous parametric monitoring of the PH/PC Kiln System stack per 40 CFR 63.1350(b). Compliance will be determined on a 30-day rolling average basis, where the 30-days are 30 consecutive kiln operating days excluding startup and shutdown. Compliance will be determined based on the site-specific operating limit established during the PM stack test in accordance with the requirements of 40 CFR 63.1349(b).

Continuous compliance for PH/PC Kiln System with respect to their Total O-HAPs limit will be determined through continuous parametric monitoring of THC emissions from the PH/PC Kiln System stack per 40 CFR 63.1350(j). Compliance will be determined on a 30-day rolling average basis, where the 30-days are 30 consecutive kiln operating days excluding startup and shutdown. Compliance will be determined based on the site-specific THC emission limit established during the Total O-HAPs stack test in accordance with the requirements of 40 CFR 63.1349(b)(7).

5.0 Type and Quantity of Hazardous Air Pollutants Emitted

See Table 1 which provides this information.

6.0 Major or Minor Source Demonstration

The Plant is a Major source as defined by 40 CFR 63.2.

7.0 Description of the Air Pollution Control Equipment (or Method)

The PH/PC kiln gases exit the upper end of the preheater tower and are forced through the Raw Grinding system, when this system is operating, or they by-pass the Raw Grinding system. In either case, the PH/PC kiln gases are routed to a mixing chamber where they are combined with the vent air from the Clinker Cooler. This occurs prior to the PH/PC kiln gases being treated by a fabric filter baghouse.

The PH/PC kiln system is equipped with an Alkali Removal System (ARS). The ARS allows the PH/PC kiln to manufacture low alkali clinker and reduces the potential for physical blockages within the preheater tower. Particulate matter is removed from the ARS by a fabric filter baghouse.

The Plant also operates a tubular-type ball mill for drying and grinding of solid fuel. Process air from the mill system is treated by a fabric filter baghouse.

Treated process air from PH/PC Kiln system, ARS, and coal mill are comingled and vent to the atmosphere together via the Main Stack.

8.0 Compliance Statement

Based on information presented in previous sections of this Report, Essroc Cement Corporation, has demonstrated compliance with the current, applicable emission standards of 40 CFR 63 Subpart LLL.

"*I certify that, to the best of my knowledge, after reasonable inquiry of those responsible for collecting the necessary information, the information contained in this report is true and accurate.*"

Heinz Knopfel
Plant Manager
Essroc Cement Corporation
Martinsburg Plant

TABLE 3

SUMMARY OF PARTICULATE MATTER EMISSIONS

Essroc Martinsburg
PH/PC Kiln Stack - Mill Off

RUN I.D.		KS-M5/202-R1		KS-M5/202-R2		KS-M5/202-R3		AVERAGE
DATE		04/06/16		04/06/16		04/06/16		
TIME STARTED		14:12		16:28		18:34		
TIME ENDED		15:44 *		17:49		20:05 **		
SAMPLING PARAMETERS								
Metered Volume (dcf)		43.539		40.629		40.916		41.695
Corrected Volume (dscf)		42.712		39.825		40.115		40.884
Corrected Volume (dscm)		1.209		1.128		1.136		1.158
Total Test Time (min)		60		60		60		60
Isokinetics (%)		100.5		103.8		105.0		103.1
GAS PARAMETERS								
Gas Temperature (°F)		298		337		350		328
Oxygen (%)		13.66		13.17		13.04		13.29
Carbon Dioxide (%)		13.15		14.10		14.36		13.87
Moisture (%)		6.84		6.79		7.68		7.10
GAS FLOW RATE								
Velocity (ft/sec)		53.99		51.20		52.36		52.52
Actual Volume (acfm)		738932		700697		716520		718716
Standard Volume (dscfm)		474297		428197		426343		442946
PROCESS DATA								
Average Kiln Clinker Production Rate (metric tons/hr)		199.4		199.3		199.4		199.4
Average Kiln Clinker Production Rate (short tons/hr)		219.8		219.7		219.8		219.8
Average Kiln PM Monitor Output (mA)		4.52		4.29		4.72		4.51
FILTERABLE PARTICULATE EMISSIONS (M5)								
Concentration (gr/dscf)	<	0.0007	<	0.0008	<	0.0008	<	0.0008
Concentration (mg/dscm)	<	1.65	<	1.77	<	1.76	<	1.73
Mass Rate (lb/hr)	<	2.94	<	2.84	<	2.81	<	2.86
Mass Rate (lb/short ton of clinker)	<	0.013	<	0.013	<	0.013	<	0.013
Applicable emission limit (lb/short ton of clinker)		0.118		0.118		0.118		0.118
75% of emissions limit		0.09		0.09		0.09		0.09
PM results below 75% of emissions limit?		Yes		Yes		Yes		Yes
CONDENSABLE PARTICULATE EMISSIONS (M202)								
Inorganic CPM								
Concentration (gr/dscf)		0.0242		0.0123		0.0194		0.0186
Concentration (mg/dscm)		55.37		28.21		44.35		42.64
Mass Rate (lb/hr)		98.37		45.25		70.82		71.48
Mass Rate (lb/short ton of clinker)		0.448		0.206		0.322		0.325
Organic CPM								
Concentration (gr/dscf)		0.0006		0.0004		0.0005		0.0005
Concentration (mg/dscm)		1.47		1.01		1.23		1.24
Mass Rate (lb/hr)		2.62		1.63		1.96		2.07
Mass Rate (lb/short ton of clinker)		0.012		0.007		0.009		0.009
Total CPM								
Concentration (gr/dscf)		0.025		0.013		0.020		0.019
Concentration (mg/dscm)		56.84		29.23		45.57		43.88
Mass Rate (lb/hr)		100.99		46.88		72.78		73.55
Mass Rate (lb/short ton of clinker)		0.459		0.213		0.331		0.335
TOTAL PARTICULATE EMISSIONS (M5 + M202)								
Concentration (gr/dscf)	<	0.026	<	0.014	<	0.021	<	0.020
Concentration (mg/dscm)	<	58.50	<	31.00	<	47.34	<	45.61
Mass Rate (lb/hr)	<	103.92	<	49.72	<	75.59	<	76.41
Mass Rate (lb/short ton of clinker)	<	0.473	<	0.226	<	0.344	<	0.348

* Delay while coal mill was down 15:17-15:33.
** Delay while coal mill was down 18:42-19:02.

Applicable MACT Emissions Limit:
Filterable PM (alternative calculated limit) = 0.118 lb/short ton of clinker

TABLE 4

SUMMARY OF PARTICULATE MATTER EMISSIONS

Essroc Martinsburg
PH/PC Kiln Stack - Mill On

RUN I.D.	KS-M5/202-R4	KS-M5/202-R5	KS-M5/202-R6	AVERAGE
DATE	04/07/16	04/07/16	04/07/16	
TIME STARTED	11:28	16:32	18:35	
TIME ENDED	12:49	18:06 *	19:45	
SAMPLING PARAMETERS				
Metered Volume (dcf)	49.150	51.348	50.941	50.480
Corrected Volume (dscf)	47.111	49.111	48.587	48.270
Corrected Volume (dscm)	1.334	1.391	1.376	1.367
Corrected Volume (dry Nm^3)	1.243	1.296	1.282	1.274
Corrected Volume (wet Nm^3)	1.372	1.436	1.418	1.409
Total Test Time (min)	60	60	60	60
Isokinetics (%)	106.6	106.5	107.7	106.9
GAS PARAMETERS				
Gas Temperature (°F)	203	203	201	202
Oxygen (%)	14.12	14.17	14.14	14.14
Carbon Dioxide (%)	12.56	12.27	12.51	12.45
Moisture (%)	9.42	9.78	9.62	9.60
GAS FLOW RATE				
Velocity (ft/sec)	51.41	54.12	52.71	52.75
Actual Volume (acfm)	703525	740670	721390	721862
Standard Volume (dscfm)	493036	514592	503607	503745
Standard Volume (wet Nm^3/hr)	861695	903027	882128	882283
PROCESS DATA				
Average Kiln Clinker Production Rate (metric tons/hr)	199.4	199.3	199.3	199.3
Average Kiln Clinker Production Rate (short tons/hr)	219.8	219.7	219.7	219.7
Average Kiln PM Monitor Output (mA)	4.73	4.65	4.69	4.69
FILTERABLE PARTICULATE EMISSIONS (M5)				
Concentration (gr/dscf)	0.0004	0.0034	0.0007	0.0015
Concentration (mg/dscm)	0.82	7.69	1.67	3.40
Concentration (mg/wet Nm^3)	0.80	7.45	1.47	3.24
Mass Rate (lb/hr)	1.52	14.83	3.15	6.50
Mass Rate (lb/short ton of clinker)	0.007	0.068	0.014	0.030
Applicable emission limit (lb/short ton of clinker)	0.118	0.118	0.118	0.118
75% of emissions limit	0.09	0.09	0.09	0.09
PM results below 75% of emissions limit?	Yes	Yes	Yes	Yes
CONDENSABLE PARTICULATE EMISSIONS (M202)				
Inorganic CPM				
Concentration (gr/dscf)	0.0019	0.0014	0.0025	0.0019
Concentration (mg/dscm)	4.24	3.29	5.78	4.44
Concentration (mg/wet Nm^3)	4.12	3.19	5.07	4.13
Mass Rate (lb/hr)	7.83	6.34	10.91	8.36
Mass Rate (lb/short ton of clinker)	0.036	0.029	0.050	0.038
Organic CPM				
Concentration (gr/dscf)	0.0004	0.0004	0.0003	0.0003
Concentration (mg/dscm)	0.85	0.81	0.58	0.75
Mass Rate (lb/hr)	1.57	1.57	1.10	1.41
Mass Rate (lb/short ton of clinker)	0.007	0.007	0.005	0.006
Total CPM				
Concentration (gr/dscf)	0.002	0.002	0.003	0.002
Concentration (mg/dscm)	5.09	4.11	6.37	5.19
Concentration (mg/wet Nm^3)	4.95	3.98	5.58	4.84
Mass Rate (lb/hr)	9.40	7.91	12.01	9.77
Mass Rate (lb/short ton of clinker)	0.043	0.036	0.055	0.044
TOTAL PARTICULATE EMISSIONS (M5 + M202)				
Concentration (gr/dscf)	0.003	0.005	0.004	0.004
Concentration (mg/dscm)	5.91	11.80	8.04	8.58
Concentration (mg/wet Nm^3)	5.75	11.42	7.05	8.07
Mass Rate (lb/hr)	10.92	22.74	15.16	16.28
Mass Rate (lb/short ton of clinker)	0.050	0.104	0.069	0.074

* Delay while coal mill was down 17:20-17:41.

Applicable MACT Emissions Limit:
Filterable PM (alternative calculated limit) = 0.118 lb/short ton of clinker

TITLE V OPERATING PERMIT RENEWAL APPLICATION FOR THE MARTINSBURG, WEST VIRGINIA PORTLAND CEMENT PLANT

Prepared by:

Essroc Cement Corporation
Martinsburg Plant
1826 S. Queen Street
Martinsburg, WV 25401

Submitted to:

West Virginia Department of Environmental Protection
Division of Air Quality
601 57th Street
Charleston, WV 25304

JULY 2016

TABLE OF CONTENTS

1.0 INTRODUCTION

This Title V Operating Permit Renewal Application (Application) is being submitted to the West Virginia Department of Environmental Protection (WVDEP), Division of Air Quality (DAQ) to request the renewal of the Part 70 Operating Permit No. R30-00300006-2012 issued to the Essroc Cement Corporation's Martinsburg Plant (Plant). The Plant is located in Martinsburg, West Virginia and currently operates a preheater/precalciner (PH/PC) kiln system and associated equipment.

The Plant's operations include quarrying and crushing of raw materials, raw material handling and storage, raw material grinding, kiln pyroprocessing, solid fuel grinding and handling, clinker cooling, clinker handling and storage, finish mill systems, and cement storage loadout. The Plant began construction of its modified facility prior to December 2, 2005 and began operation of the PH/PC kiln system and associated equipment on October 20, 2009. The three wet process kilns which the Plant previously operated were permanently shut down in 2009. This Application includes only those existing sources which continue to be operated as part of the major modification and all new and modified sources associated with the operation of the new PH/PC kiln system.

2.0 PROJECT DESCRIPTION

The Plant currently operates under Title V Operating Permit No. R30-00300006-2012 (MM04) (Permit) issued by WV DEP on January 19, 2012 and last modified by WV DEP on March 27, 2015. This Permit will expire on January 19, 2017. Per Condition 2.3.2 of the current Title V Operating Permit, the Plant is required to submit a renewal application to WV DEP at least six months prior to the date of permit expiration (i.e., July 19, 2016).

Per the WV DEP general instructions for Title V Operating Permit Renewal Applications, two signed copies of this Application have been submitted to the WV DEP with the certification page of the "Renewal Title V Permit Application – General Form" signed in blue ink. Each copy of the Application contains an electronic copy of the entire application as Attachment M.

Section 3.0 of this Application includes the Renewal Title V Permit Application – General Form, as well as all other forms required to complete the renewal application. These include Attachment D – Title V Equipment Table, Attachment E – Emission Unit Forms, Attachment G – Air Pollution Control Device Forms, and Attachment H – Compliance Assurance Monitoring (CAM) Forms. Also included in Section 3.0 are a plot plan of the Plant, process flow diagrams, and an area map.

In addition, included as Attachment I is a Federal and State Regulatory Analysis which provides a detailed list of all federal and state regulatory requirements for each emission source, and is intended to meet the regulatory requirements of the General Form and Attachment E Form.

As of July 2016, the WV DEP is currently in the process of updating the existing Title V Operating Permit and issuing an updated version Permit No. R30-00300006-2012 (MM05 and MM06), which will reflect permit applications for modifications of the Plant submitted in November 2015 and February 2016. A detailed review was conducted of the draft Title V Operating Permit No. R30-00300006-2012 (MM05 and MM06), which was sent out for EPA comment on June 24, 2016. Attachment J of this application provides a list of minor corrections to condition language to correct errors and omissions, which the Plant believes should be incorporated into the next revision of the Title V Operating Permit. Attachment J also requests the incorporation of applicable monitoring requirements from Consent Order CO-R7-E-2016-6, issued to the Plant on April 8, 2016.

Attachment K provides a copy of the Plant's Operation and Maintenance Plan, which is required to be included with all Title V Operating Permit renewal applications per 40 CFR 63.1347(a). Attachment L provides a copy of the Plant's Site Specific Monitoring Plan, which was required to be developed by 40 CFR 63.1350(p). This Site Specific Monitoring Plan supersedes the requirements listed in the 45 CSR 10 Monitoring Plan included in the current Title V Operating Permit and is intended to replace the 45 CSR 10 Monitoring Plan.

3.0 TITLE V RENEWAL APPLICATION GENERAL FORM

The Renewal Title V Permit Application - General Form is included in Section 3.0 followed by the Attachments listed below.

Within the Renewal Title V Permit Application - General Form, the Plant is making one change to the permit shield as it is currently reflected in the Title V Operating Permit. No permit shield is being requested to continue for 40 CFR 60 Subpart F.

On February 12, 2013, the U.S. EPA published in the Federal Register the final NSPS for the Portland cement plants under 40 CFR 60 Subpart F. Previously 40 CFR 63 Subpart LLL had exempted any affected source subject to Subpart LLL from also being subject to NSPS Subpart F and the Plant had therefore requested and been granted a permit shield for NSPS Subpart F. However, this provision was removed from NESHAP Subpart LLL on February 12, 2013. Therefore, all affected sources subject to NESHAP Subpart LLL are now also subject to all applicable requirements under NSPS Subpart F. However, for existing affected sources all requirements are identical or more stringent within NESHAP Subpart LLL. Due to these changes, the Plant no longer requests a permit shield for 40 CFR 60 Subpart F be included in their Title V Operating Permit.

List of Attachments:

ATTACHMENT A – Area Map
ATTACHMENT B – Plot Plan
ATTACHMENT C – Process Flow Diagrams
ATTACHMENT D – Title V Equipment Table
ATTACHMENT E – Emission Unit Forms
ATTACHMENT F – Schedule of Compliance Forms
ATTACHMENT G – Air Pollution Control Device Forms
ATTACHMENT H – Compliance Assurance Monitoring (CAM) Forms
ATTACHMENT I – Federal and State Regulatory Analysis
ATTACHMENT J – Title V Permit Language Changes
ATTACHMENT K – Operation & Maintenance Plan
ATTACHMENT L – Site Specific Monitoring Plan
ATTACHMENT M – Electronic Copy of the Title V Operating Permit Renewal Application

WEST VIRGINIA DEPARTMENT OF ENVIRONMENTAL PROTECTION

DIVISION OF AIR QUALITY

601 57th Street SE

Charleston, WV 25304

Phone: (304) 926-0475

www.dep.wv.gov/daq

INITIAL/RENEWAL TITLE V PERMIT APPLICATION - GENERAL FORMS

Section 1: General Information

1. **Name of Applicant (As registered with the WV Secretary of State's Office):** Essroc Cement Corporation	**2. Facility Name or Location:** Martinsburg Plant
3. DAQ Plant ID No.: 0 0 3 — 0 0 0 0 6	**4. Federal Employer ID No. (FEIN):** 5 4 1 2 3 9 0 5 6

5. **Permit Application Type:**

- ☐ Initial Permit — When did operations commence? 10/20/2009
- ☒ Permit Renewal — What is the expiration date of the existing permit? 01/19/2017
- ☐ Update to Initial/Renewal Permit Application

6. Type of Business Entity:

☒ Corporation ☐ Governmental Agency ☐ LLC
☐ Partnership ☐ Limited Partnership

7. Is the Applicant the:

☐ Owner ☐ Operator ☒ Both

If the Applicant is not both the owner and operator, please provide the name and address of the other party.

_____

_____

_____

8. Number of onsite employees:

150

9. Governmental Code:

- ☒ Privately owned and operated; 0
- ☐ Federally owned and operated; 1
- ☐ State government owned and operated; 2
- ☐ County government owned and operated; 3
- ☐ Municipality government owned and operated; 4
- ☐ District government owned and operated; 5

10. Business Confidentiality Claims

Does this application include confidential information (per 45CSR31)? ☐ Yes ☒ No

If yes, identify each segment of information on each page that is submitted as confidential, and provide justification for each segment claimed confidential, including the criteria under 45CSR§31-4.1, and in accordance with the DAQ's *"PRECAUTIONARY NOTICE-CLAIMS OF CONFIDENTIALITY"* guidance.

11. Mailing Address		
Street or P.O. Box: 1826 South Queen Street		
City: Martinsburg	**State:** WV	**Zip:** 25401
Telephone Number: (304) 260-1800	**Fax Number:** (304) 267-6571	

12. Facility Location		
Street: 1826 South Queen Street	**City:** Martinsburg	**County:** Berkeley
UTM Easting: 243.50 km	**UTM Northing:** 4,369.00 km	**Zone:** ☐ 17 or ☒ 18
Directions: Take Queen Street exit off Route 45 at Martinsburg; go south on Queen Street to plant.		
Portable Source? ☐ Yes ☒ No		
Is facility located within a nonattainment area? ☐ Yes ☒ No		**If yes, for what air pollutants?**
Is facility located within 50 miles of another state? ☒ Yes ☐ No		**If yes, name the affected state(s).** Maryland, Virginia, Pennsylvania
Is facility located within 100 km of a Class I Area[1]? ☒ Yes ☐ No **If no, do emissions impact a Class I Area[1]?** ☐ Yes ☐ No		**If yes, name the area(s).** Dolly Sods WA Otter Creek WA Shenandoah National Park James River Face WA

[1] *Class I areas include Dolly Sods and Otter Creek Wilderness Areas in West Virginia, and Shenandoah National Park and James River Face Wilderness Area in Virginia.*

13. Contact Information		
Responsible Official: Heinz Knopfel		**Title:** Plant Manager
Street or P.O. Box: 1826 South Queen Street		
City: Martinsburg	**State:** WV	**Zip:** 25401
Telephone Number: (304) 260 - 1887	**Fax Number:** (304) 267 - 6571	
E-mail address: Heinz.knopfel@essroc.com		
Environmental Contact: Andrew Frye		**Title:** Environmental Manager
Street or P.O. Box: 1826 South Queen Street		
City: Martinsburg	**State:** WV	**Zip:** 25401
Telephone Number: (304) 260 - 1827	**Fax Number:** (304) 267 - 2617	
E-mail address: Andrew.Frye@essroc.com		
Application Preparer: Miranda Brown		**Title:** Environmental Scientist
Company: Spectrum Environmental Sciences, Inc.		
Street or P.O. Box: 97 Thomas Johnson Drive, Suite 200		
City: Frederick	**State:** MD	**Zip: 21702**
Telephone Number: (301) 620-1200	**Fax Number:** (301) 620-4118	
E-mail address: mbrown@spectumenv.com		

14. Facility Description

List all processes, products, NAICS and SIC codes for normal operation, in order of priority. Also list any process, products, NAICS and SIC codes associated with any alternative operating scenarios if different from those listed for normal operation.

Process	Products	NAICS	SIC
Cement Manufacturing	Portland cement	327310	3241

Provide a general description of operations.

The Plant's operations include quarrying and crushing of raw materials, raw material handling and storage, raw material grinding, kiln pyroprocessing, solid fuel grinding and handling, clinker cooling, clinker handling and storage, finish mill systems, and cement storage loadout.

15. Provide an **Area Map** showing plant location as **ATTACHMENT A**.

16. Provide a **Plot Plan(s)**, e.g. scaled map(s) and/or sketch(es) showing the location of the property on which the stationary source(s) is located as **ATTACHMENT B**. For instructions, refer to "Plot Plan - Guidelines."

17. Provide a detailed **Process Flow Diagram(s)** showing each process or emissions unit as **ATTACHMENT C**. Process Flow Diagrams should show all emission units, control equipment, emission points, and their relationships.

Section 2: Applicable Requirements

18. Applicable Requirements Summary	
Instructions: Mark all applicable requirements.	
☐ SIP	☐ FIP
☐ Minor source NSR (45CSR13)	☒ PSD (45CSR14)
☐ NESHAP (45CSR34)	☐ Nonattainment NSR (45CSR19)
☒ Section 111 NSPS	☒ Section 112(d) MACT standards
☐ Section 112(g) Case-by-case MACT	☐ 112(r) RMP
☐ Section 112(i) Early reduction of HAP	☐ Consumer/commercial prod. reqts., section 183(e)
☐ Section 129 Standards/Reqts.	☐ Stratospheric ozone (Title VI)
☐ Tank vessel reqt., section 183(f)	☐ Emissions cap 45CSR§30-2.6.1
☒ NAAQS, increments or visibility (temp. sources)	☐ 45CSR27 State enforceable only rule
☒ 45CSR4 State enforceable only rule	☐ Acid Rain (Title IV, 45CSR33)
☒ Emissions Trading and Banking (45CSR28)	☐ **C**ompliance **A**ssurance **M**onitoring (40CFR64)
☐ CAIR NO_x Annual Trading Program (45CSR39)	☐ CAIR NO_x Ozone Season Trading Program (45CSR40)
☐ CAIR SO_2 Trading Program (45CSR41)	

19. Non Applicability Determinations
List all requirements which the source has determined not applicable and for which a permit shield is requested. The listing shall also include the rule citation and the reason why the shield applies. 40 CFR 60 Subpart LL - Standards of Performance for Metallic Mineral Processing do not apply because lime or limestone is not metallic mineral. 40 CFR 60 Subpart UUU - Standards of Performance for Calciners and Dryers in Mineral Industries do not apply because lime or limestone is not listed as a mineral processed or produced in a mineral processing plant. 40 CFR 72 - Acid Rain Program General Provisions does not apply to Essroc Cement Corporation because it is not considered a Title IV (Acid Rain) Source. 40 CFR 64 – Compliance Assurance Monitoring (CAM). See Attachment H for discussion of why the shield applies.
☒ Permit Shield

19. Non Applicability Determinations *(Continued)* - *Attach additional pages as necessary.*

List all requirements which the source has determined not applicable and for which a permit shield is requested. The listing shall also include the rule citation and the reason why the shield applies.

☐ Permit Shield

20. Facility-Wide Applicable Requirements

List all facility-wide applicable requirements. For each applicable requirement, include the underlying rule/regulation citation and/or construction permit with the condition number. (*Note: Title V permit condition numbers alone are not the underlying applicable requirements*).

See Attachment I – Federal and State Regulatory Analysis

☐ Permit Shield

For all facility-wide applicable requirements listed above, provide monitoring/testing / recordkeeping / reporting which shall be used to demonstrate compliance. If the method is based on a permit or rule, include the condition number and/or citation. (Note: Each requirement listed above must have an associated method of demonstrating compliance. If there is not already a required method in place, then a method must be proposed.)

See Attachment I – Federal and State Regulatory Analysis

Are you in compliance with all facility-wide applicable requirements? ☒ Yes ☐ No

If no, complete the **Schedule of Compliance Form** as **ATTACHMENT F**.

20. Facility-Wide Applicable Requirements *(Continued)* - *Attach additional pages as necessary.*

List all facility-wide applicable requirements. For each applicable requirement, include the rule citation and/or permit with the condition number.

See Attachment I – Federal and State Regulatory Analysis

☐ Permit Shield

For all facility-wide applicable requirements listed above, provide monitoring/testing/recordkeeping/ reporting which shall be used to demonstrate compliance. If the method is based on a permit or rule, include the condition number and/or citation. (Note: Each requirement listed above must have an associated method of demonstrating compliance. If there is not already a required method in place, then a method must be proposed.)

See Attachment I – Federal and State Regulatory Analysis

Are you in compliance with all facility-wide applicable requirements? ☒ Yes ☐ No

If no, complete the **Schedule of Compliance Form** as **ATTACHMENT F**.

21. Active Permits/Consent Orders		
Permit or Consent Order Number	Date of Issuance MM/DD/YYYY	List any Permit Determinations that Affect the Permit *(if any)*
R14-0026M	04/08 /2016	
	/ /	
	/ /	
	/ /	
	/ /	
	/ /	
	/ /	
	/ /	
	/ /	
	/ /	
	/ /	
	/ /	
	/ /	
	/ /	
	/ /	
	/ /	
	/ /	
	/ /	
	/ /	
	/ /	
	/ /	
	/ /	
	/ /	
	/ /	

22. Inactive Permits/Obsolete Permit Conditions		
Permit Number	Date of Issuance	Permit Condition Number
	MM/DD/YYYY	
	/ /	
	/ /	
	/ /	
	/ /	
	/ /	
	/ /	
	/ /	
	/ /	
	/ /	
	/ /	
	/ /	
	/ /	
	/ /	
	/ /	
	/ /	
	/ /	
	/ /	
	/ /	
	/ /	
	/ /	
	/ /	
	/ /	
	/ /	
	/ /	
	/ /	

Section 3: Facility-Wide Emissions

23. Facility-Wide Emissions Summary [Tons per Year]	
Criteria Pollutants	Potential Emissions
Carbon Monoxide (CO)	4,458.50
Nitrogen Oxides (NO_X)	4,031.75
Lead (Pb)	0.08
Particulate Matter ($PM_{2.5}$)[1]	222.30
Particulate Matter (PM_{10})[1]	584.65
Total Particulate Matter (TSP)	927.69
Sulfur Dioxide (SO_2)	4,515.50
Volatile Organic Compounds (VOC)	158.78
Hazardous Air Pollutants[2]	Potential Emissions
Fluorides	1.02
Regulated Pollutants other than Criteria and HAP	Potential Emissions

[1]$PM_{2.5}$ and PM_{10} are components of TSP.
[2]For HAPs that are also considered PM or VOCs, emissions should be included in both the HAPs section and the Criteria Pollutants section.

Section 4: Insignificant Activities

24. Insignificant Activities (Check all that apply)		
☒	1.	Air compressors and pneumatically operated equipment, including hand tools.
☐	2.	Air contaminant detectors or recorders, combustion controllers or shutoffs.
☐	3.	Any consumer product used in the same manner as in normal consumer use, provided the use results in a duration and frequency of exposure which are not greater than those experienced by consumer, and which may include, but not be limited to, personal use items; janitorial cleaning supplies, office supplies and supplies to maintain copying equipment.
☒	4.	Bathroom/toilet vent emissions.
☒	5.	Batteries and battery charging stations, except at battery manufacturing plants.
☒	6.	Bench-scale laboratory equipment used for physical or chemical analysis, but not lab fume hoods or vents. Many lab fume hoods or vents might qualify for treatment as insignificant (depending on the applicable SIP) or be grouped together for purposes of description.
☐	7.	Blacksmith forges.
☐	8.	Boiler water treatment operations, not including cooling towers.
☒	9.	Brazing, soldering or welding equipment used as an auxiliary to the principal equipment at the source.
☐	10.	CO_2 lasers, used only on metals and other materials which do not emit HAP in the process.
☒	11.	Combustion emissions from propulsion of mobile sources, except for vessel emissions from Outer Continental Shelf sources.
☐	12.	Combustion units designed and used exclusively for comfort heating that use liquid petroleum gas or natural gas as fuel.
☒	13.	Comfort air conditioning or ventilation systems not used to remove air contaminants generated by or released from specific units of equipment.
☐	14.	Demineralized water tanks and demineralizer vents.
☐	15.	Drop hammers or hydraulic presses for forging or metalworking.
☐	16.	Electric or steam-heated drying ovens and autoclaves, but not the emissions from the articles or substances being processed in the ovens or autoclaves or the boilers delivering the steam.
☐	17.	Emergency (backup) electrical generators at residential locations.
☐	18.	Emergency road flares.
☐	19.	Emission units which do not have any applicable requirements and which emit criteria pollutants (CO, NO_x, SO_2, VOC and PM) into the atmosphere at a rate of less than 1 pound per hour and less than 10,000 pounds per year aggregate total for each criteria pollutant from all emission units. Please specify all emission units for which this exemption applies along with the quantity of criteria pollutants emitted on an hourly and annual basis: _____ _____ _____ _____ _____ _____ _____ _____

24. Insignificant Activities (Check all that apply)		
☐	20.	Emission units which do not have any applicable requirements and which emit hazardous air pollutants into the atmosphere at a rate of less than 0.1 pounds per hour and less than 1,000 pounds per year aggregate total for all HAPs from all emission sources. This limitation cannot be used for any source which emits dioxin/furans nor for toxic air pollutants as per 45CSR27. Please specify all emission units for which this exemption applies along with the quantity of hazardous air pollutants emitted on an hourly and annual basis: _____ _____ _____ _____ _____
☐	21.	Environmental chambers not using hazardous air pollutant (HAP) gases.
☒	22.	Equipment on the premises of industrial and manufacturing operations used solely for the purpose of preparing food for human consumption.
☐	23.	Equipment used exclusively to slaughter animals, but not including other equipment at slaughterhouses, such as rendering cookers, boilers, heating plants, incinerators, and electrical power generating equipment.
☒	24.	Equipment used for quality control/assurance or inspection purposes, including sampling equipment used to withdraw materials for analysis.
☐	25.	Equipment used for surface coating, painting, dipping or spray operations, except those that will emit VOC or HAP.
☒	26.	Fire suppression systems.
☐	27.	Firefighting equipment and the equipment used to train firefighters.
☐	28.	Flares used solely to indicate danger to the public.
☒	29.	Fugitive emission related to movement of passenger vehicle provided the emissions are not counted for applicability purposes and any required fugitive dust control plan or its equivalent is submitted.
☐	30.	Hand-held applicator equipment for hot melt adhesives with no VOC in the adhesive formulation.
☒	31.	Hand-held equipment for buffing, polishing, cutting, drilling, sawing, grinding, turning or machining wood, metal or plastic.
☐	32.	Humidity chambers.
☐	33.	Hydraulic and hydrostatic testing equipment.
☐	34.	Indoor or outdoor kerosene heaters.
☐	35.	Internal combustion engines used for landscaping purposes.
☐	36.	Laser trimmers using dust collection to prevent fugitive emissions.
☐	37.	Laundry activities, except for dry-cleaning and steam boilers.
☐	38.	Natural gas pressure regulator vents, excluding venting at oil and gas production facilities.
☐	39.	Oxygen scavenging (de-aeration) of water.
☐	40.	Ozone generators.
☒	41.	Plant maintenance and upkeep activities (e.g., grounds-keeping, general repairs, cleaning, painting, welding, plumbing, re-tarring roofs, installing insulation, and paving parking lots) provided these activities are not conducted as part of a manufacturing process, are not related to the source's primary business activity, and not otherwise triggering a permit modification. (Cleaning and painting activities qualify if they are not subject to VOC or HAP control requirements. Asphalt batch plant

24. Insignificant Activities (Check all that apply)		
		owners/operators must still get a permit if otherwise requested.)
☒	42.	Portable electrical generators that can be moved by hand from one location to another. "Moved by Hand" means that it can be moved without the assistance of any motorized or non-motorized vehicle, conveyance, or device.
☒	43.	Process water filtration systems and demineralizers.
☐	44.	Repair or maintenance shop activities not related to the source's primary business activity, not including emissions from surface coating or de-greasing (solvent metal cleaning) activities, and not otherwise triggering a permit modification.
☒	45.	Repairs or maintenance where no structural repairs are made and where no new air pollutant emitting facilities are installed or modified.
☒	46.	Routing calibration and maintenance of laboratory equipment or other analytical instruments.
☐	47.	Salt baths using nonvolatile salts that do not result in emissions of any regulated air pollutants. Shock chambers.
☐	48.	Shock chambers.
☐	49.	Solar simulators.
☒	50.	Space heaters operating by direct heat transfer.
☐	51.	Steam cleaning operations.
☐	52.	Steam leaks.
☐	53.	Steam sterilizers.
☐	54.	Steam vents and safety relief valves.
☐	55.	Storage tanks, reservoirs, and pumping and handling equipment of any size containing soaps, vegetable oil, grease, animal fat, and nonvolatile aqueous salt solutions, provided appropriate lids and covers are utilized.
☒	56.	Storage tanks, vessels, and containers holding or storing liquid substances that will not emit any VOC or HAP. Exemptions for storage tanks containing petroleum liquids or other volatile organic liquids should be based on size limits such as storage tank capacity and vapor pressure of liquids stored and are not appropriate for this list.
☐	57.	Such other sources or activities as the Director may determine.
☐	58.	Tobacco smoking rooms and areas.
☒	59.	Vents from continuous emissions monitors and other analyzers.

Section 5: Emission Units, Control Devices, and Emission Points

25. Equipment Table
Fill out the **Title V Equipment Table** and provide it as **ATTACHMENT D**.
26. Emission Units
For each emission unit listed in the **Title V Equipment Table**, fill out and provide an **Emission Unit Form** as **ATTACHMENT E**.
For each emission unit not in compliance with an applicable requirement, fill out a **Schedule of Compliance Form** as **ATTACHMENT F**.
27. Control Devices
For each control device listed in the **Title V Equipment Table**, fill out and provide an **Air Pollution Control Device Form** as **ATTACHMENT G**.
For any control device that is required on an emission unit in order to meet a standard or limitation for which the potential pre-control device emissions of an applicable regulated air pollutant is greater than or equal to the Title V Major Source Threshold Level, refer to the **Compliance Assurance Monitoring (CAM) Form(s)** for CAM applicability. Fill out and provide these forms, if applicable, for each Pollutant Specific Emission Unit (PSEU) as **ATTACHMENT H**.

Section 6: Certification of Information

28. Certification of Truth, Accuracy and Completeness and Certification of Compliance

*Note: This Certification must be signed by a responsible official. The **original**, signed in **blue ink**, must be submitted with the application. Applications without an **original** signed certification will be considered as incomplete.*

a. Certification of Truth, Accuracy and Completeness

I certify that I am a responsible official (as defined at 45CSR§30-2.38) and am accordingly authorized to make this submission on behalf of the owners or operators of the source described in this document and its attachments. I certify under penalty of law that I have personally examined and am familiar with the statements and information submitted in this document and all its attachments. Based on my inquiry of those individuals with primary responsibility for obtaining the information, I certify that the statements and information are to the best of my knowledge and belief true, accurate, and complete. I am aware that there are significant penalties for submitting false statements and information or omitting required statements and information, including the possibility of fine and/or imprisonment.

b. Compliance Certification

Except for requirements identified in the Title V Application for which compliance is not achieved, I, the undersigned hereby certify that, based on information and belief formed after reasonable inquiry, all air contaminant sources identified in this application are in compliance with all applicable requirements.

Responsible official (type or print)

Name: Heinz Knopfel	Title: Plant Manager

Responsible official's signature:

Signature: _____ Signature Date: JUNE 30/16

(Must be signed and dated in blue ink)

Note: Please check all applicable attachments included with this permit application:

☒	ATTACHMENT A: Area Map
☒	ATTACHMENT B: Plot Plan(s)
☒	ATTACHMENT C: Process Flow Diagram(s)
☒	ATTACHMENT D: Equipment Table
☒	ATTACHMENT E: Emission Unit Form(s)
☒	ATTACHMENT F: Schedule of Compliance Form(s)
☒	ATTACHMENT G: Air Pollution Control Device Form(s)
☒	ATTACHMENT H: Compliance Assurance Monitoring (CAM) Form(s)

All of the required forms and additional information can be found and downloaded from, the DEP website at www.dep.wv.gov/daq, requested by phone (304) 926-0475, and/or obtained through the mail.

An area map of the Plant can be found in Attachment A of this Application.

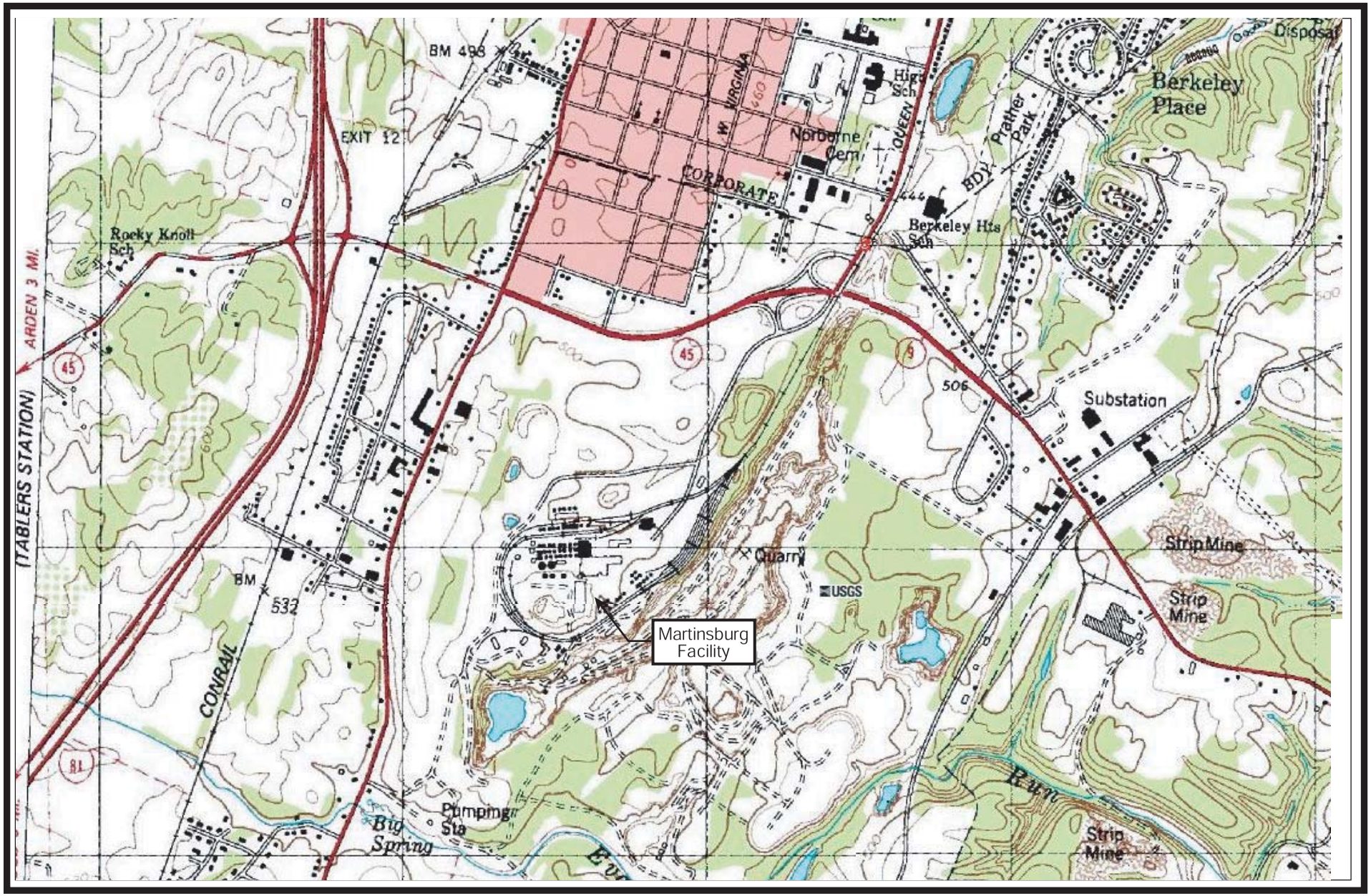

ATTACHMENT A -
Essroc Cement Corporation -
Martinsburg Plant
Area Map

ATTACHMENT B – PLOT PLAN

A Plot Plan of the Plant can be found in Attachment B of this Application.

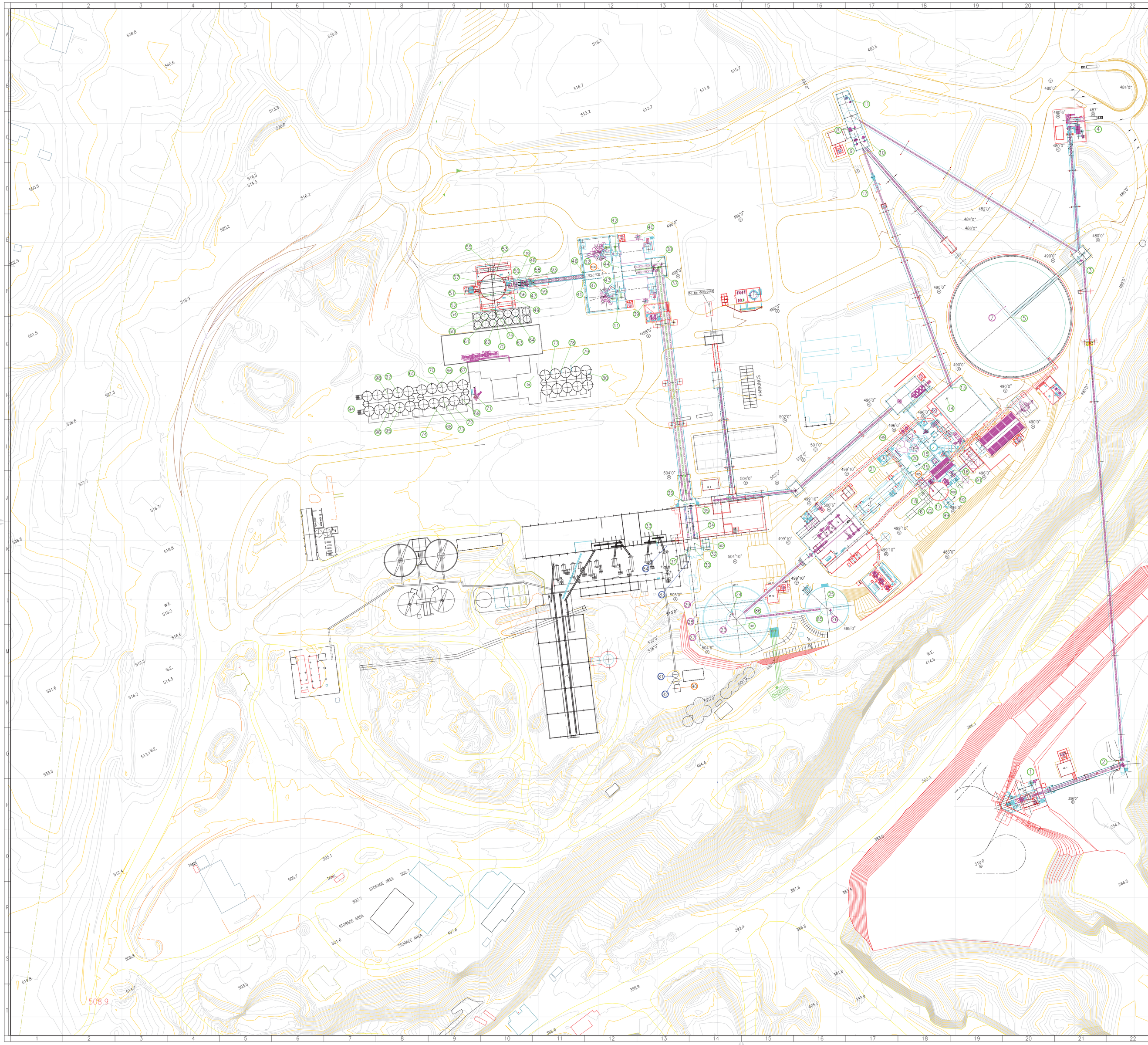

POINT N°	ENGINEERING ID/CONTROL DEVICE ID ITEM	PORTATES	COORDINATES X	Y	Z
1	D161015 BF/CD37.03	70000 m³/h	2399200'– 5 5/16"	343188–5 1/16"	320' 6"
2	D161020 BF/CD37.04	8000 m³/h	2399516–11 11/16"	343246'–5 3/8"	292' 9"
3	D162026 BF/CD37.06	10800 m³/h	2399409'–0 5/8"	344500'– 2 3/4"	561' 4"
4	E164015 BF/CD39.05	50000 m³/h	2399418'–7 3/4"	344830'–4 11/16"	530'
5	D162033 BF/CD38.01	3600 m³/h	2399237'–7 5/16"	344360'–8 9/16"	515'
6	Alt. Fuel Feeding Sys./ CD41.04				
7	E163007 BF/CD38.02	3600 m³/h	2399225'–5 5/16"	344389'–1 9/16"	476'
8	E163020 BF/CD39.01	12600 m³/h	2398846'–0 1/2"	344836'–9 1/16"	646'
9	F165012 BF/CD39.03	7200 m³/h	2398844'–8 7/16"	344796'–3 7/8"	602'2"
10	E163031 BF/CD39.02	3600 m³/h	2398876'–3 5/16"	344808'–0 1/16"	602'2"
11	F165057 BF/CD39.04	5400 m³/h	2398839'–6 9/16"	344906'–10 7/8"	630'
12	F165052 BF/CD39.06	3600 m³/h	2398895'–8 5/16"	344711'–9 11/16"	508' 6"
13	F165024 BF/CD40.01	15300 m³/h	2399088'–3 7/8"	344185'–10 3/8"	546' 11"
14	F165034 BF/CD40.02	12600 m³/h	2399078'–4 1/16"	344157'–3 7/8"	623' 9"
15	H170113BF/0187034/H167141/CD42.04	274000 m³/h / 136621 m³/h / 1050000 m³/h	2399045'–0 3/16"	344034'–4 3/4"	933' 8"
16	G168009 BF/CD40.05	8160 m³/h	2399096'	343976'–6 7/16"	535'
17	G168015 BF/CD40.06	9000 m³/h	2399065'–2"	343916'–10 13/16"	794' 6"
18	H169016 BF/CD40.07	7200 m³/h	2399047'–2 11/16"	343949'–3 5/8"	553' 5"
19	H169030 BF/CD42.02	9000 m³/h	2398984'–8 11/16"	343969'–11 15/16"	876' 8"
20	H169027 BF/CD42.03	21600 m³/h	2398976'–10 5/8"	343976'–1"	876' 8"
21	H169298 BF/CD42.05	3600 m³/h	2398958'–7 1/8"	344000–3 5/16"	876' 8"
22	Alt. Fuel Dosing Sys./ CD41.05				
23	I178117 BF/CD43.01	3600 m³/h	2398534'–0 13/16"	343659'–6 13/16"	495' 5"
24	I175017 BF/CD43.03	12000 m³/h	2398536'–5 1/4"	343623'–4 1/2"	583' 6"
25	I175053 BF/CD43.04	5400 m³/h	2398785'–8 9/16"	343615'–4 3/4"	667' 11"
26	I177069 BF/CD43.06	3600 m³/h	2398773'–8 15/16"	343644–10 7/16"	486' 3"
27	I178078 BF/CD43.08	3600 m³/h	2398452'–1 13/16"	343570'–4 3/4"	500' 7"
28	I178076 BF/CD43.09	3600 m³/h	2398447'–3 5/8"	343610'–1 1/4"	500' 7"
29	I178074 BF/CD43.13	3600 m³/h	2398442'–5 1/2"	343649'–9 11/16"	500' 7"
30	J281071 BF/CD44.01	5400 m³/h	2398443'–10 9/16"	343777'–8 1/8"	573'
31	J179071 BF/CD44.02	5400 m³/h	2398437'–8"	343776'–3 3/4"	573'
32	I178111 BF/CD43.14	9000 m³/h	2398443'–1 13/16"	343792'–7 7/16"	631' 7"
33	I178126 BF/CD43.16	9000 m³/h	2398347'"–7 5/8"	343794'–6"	605'
34	J281065 BF/CD44.03	3600 m³/h	2398448'–5 11/16"	343817'–2 3/8"	518'6"
35	J281011 BF/CD44.04	5400 m³/h	2398439'–7 7/16"	343893–2 1/4"	531' 1"
36	J179011 BF/CD44.05	5400 m³/h	2398424'–10 3/4"	343891'–4 11/16"	531' 1"
37	J179062 BF/CD44.06	5400 m³/h	2398136'–6 5/8"	344480'10 7/16"	617' 8"
38	J281062 BF/CD44.14	5400 m³/h	2398350'–11 1/8"	344507'–7 7/16"	617' 8"
39	J180049 BF/CD44.09	530000 m³/h	2398139'–6 3/4"	344602–8 1/16"	652' 4"
40	J282049 BF/CD44.12	530000 m³/h	2398299'–11"	344563'–3 13/16"	652' 4"
41	J179021 BF/CD44.07	12600 m³/h	2398254'–1 3/16"	344436'–9"	625' 3"
42	J281021 BF/CD44.10	12600 m³/h	2398244'–7 3/4"	344516'–2"	625' 3"
43	J179032 BF/CD44.08	7200 m³/h	2398254'–4 9/16"	344463'–10 1/2"	538' 2"
44	J281032 BF/CD44.11	7200 m³/h	2398251'–5 3/8"	344487'–10 13/16"	538'2"
45	K183100 BF/CD44.13	3600 m³/h	2398164'–9 1/4"	344455'–6 13/16"	570'8"
46	K284100 BF/CD44.15	3600 m³/h	2398162'–5 5/8"	344474'–4 7/8"	570' 8"
47	K183015 BF/CD45.01	7849 m³/h	2398020'–9 13/16"	344433'–0 3/8"	523' 6"
48	K284015 BF/CD45.02	7849 m³/h	2398017'–3 7/8"	344461'–7 15/16"	523' 6"
49	K183019 BF/CD45.03	5400 m³/h	2397956'–8 3/16"	344424'–1 7/16"	713'
50	K284019 BF/CD45.04	5400 m³/h	2397952'–11 1/16"	344454'–10 5/8"	713'
51	K185062 BF/CD45.07	9000 m³/h	2397928'–6 3/8"	344418'–5"	713'
52	K185064 BF/CD45.05	8600 m³/h	2397940'–3 15/16"	344421'–10 13/16"	713'
53	K185066 BF/CD45.06	8600 m³/h	2397936'–2 1/4"	344458'–10 9/16"	713'
54	L190126 BF/CD45.11	5400 m³/h	2397941'–4 1/2"	344382'–3 9/16"	546'
55	L191129 BF/CD45.08	5400 m³/h	2397927'–3 1/8"	344431'–8 1/2"	546'
56	L190123 BF/CD45.10	4800 m³/h	2397967'–2 3/8"	344423'–1 3/4"	543' 8"
57	L191120 BF/CD45.09	4800 m³/h	2397901'–2 7/16"	344450'–10 1/8"	543' 8"
58	L284119a BF/CD21.10	2744 m³/h	2398015'–1"	344451'–9 11/16"	510' 8"
59	L183119a BF/CD21.11	2744 m³/h	2398032'–5 11/16"	344447'–6 5/8"	510' 8"
60	K460314 BF/CD46.01	5645 m³/h	2397914'–9 3/8"	344369'–1 11/16"	580' 0"
61	K460323 BF/CD46.02	12374 m³/h	2397923'–7 7/16"	344365'–2 11/16"	580' 0"
62	K460332 BF/CD46.03	4253 m³/h	2397941'–4 1/2"	344354'–4 1/8"	580' 0"
63	K460341 BF/CD46.04	4253 m³/h	2397961'–8 5/8"	344354'–10 1/16"	580' 0"
64	K460348 BF/CD46.05	4000 m³/h	2397992'–3 7/8"	344364'–0 5/16"	580' 0"
65	K152161 BF/CD21.05	7748 m³/h	2397779'–10 5/8"	344192'–10 7/8"	610' 0"
66	K152168 BF/CD21.06	7748 m³/h	2397805'–6 1/4"	344197'–5 3/4"	610' 0"
67	K152153 BF/CD21.07	7748 m³/h	2397837'–6 3/16"	344192'–0 7/8"	610' 0"
68	K152262 BF/CD21.08	7748 m³/h	2397786'–10"	344134'–8 3/16"	610' 0"
69	K152253 BF/CD21.09	7748 m³/h	2397856'–10 9/16"	344154'–3 3/4"	610' 0"
70	K453031 BF/CD21.13	595 m³/h	2397804'–5 5/16"	344188'–6 1/8"	514' 0"
71	K453217 BF/CD48.01	22850 m³/h	2397887'–2 7/16"	344167'–3 3/8"	546' 0"
72	L354038 BF/CD45.13	4672 m³/h	2397839'–6 5/16"	344131'–11 1/16"	554' 0"
73	K453131 BF/CD21.12	595 m³/h	2397808'–10 7/8"	344151'–1 5/16"	514' 0"
74	L354012 BF/CD45.12	4672 m³/h	2397789'–10"	344125'–2 7/8"	554' 0"
75	L492034 BF/CD46.07	3043 m³/h	2397945'–0 3/8"	344338'–10 3/4"	540' 0"
76	L492134 BF/CD46.06	3043 m³/h	2397940'–5 15/16"	344376'–10 1/2"	540' 0"
77	K389120 BF/CD20.06	6456 m³/h	2398080'–4 13/16"	344225'–0 3/16"	610' 0"
78	K389112 BF/CD20.05	6456 m³/h	2398106'–2 5/8"	344228'–1 3/16"	610' 0"
79	K389103 BF/CD20.04	6456 m³/h	2398130'–11 5/8"	344240'–1 7/16"	610' 0"
80	J155270 BF/CD42.01	13017 m³/h	2398179'–9 3/4"	344219'–8 9/16"	610' 0"
81	I3nr663s BF/CD31.01	4080 m³/h	2398426'–10 3/4"	343745'–8 9/16"	520' 0"
82	I3nr664s BF/CD31.02	4080 m³/h	2398387'–6"	343456'–11 7/16"	619' 0"
83	J3nr623C BF/CD19.02	105000 m³/h	2398386'–9 11/16"	343447'–0 1/4"	610' 0"
84	J3nr626 BF/CD19.01	33980 m³/h	2398372'–1 5/8"	343785'–7 1/16"	597' 0"
85	Top of LA Clinker Silo/ CD43.19	11044 m³/h			
86	Normal Clinker Bin PC73/ CD43.20	16141 m³/h			
87	FM1 Reject Elevator HZ/ CD44.18	2549 m³/h			
90	I111668 BK/CD31.03	5000 m³/h	2398399'–2 7/8"	343427'–5 7/8"	545' 0"
91	H1 nr700 BF/42.06	1699 m³/h	2399128'–0"	343957'–3 3/8"	596' 0"
92	FM2 Reject Elevator HZ/ CD44.19	2549 m³/h			
93	K185004a BF/CD45.14	2500 m³/h	2398024'–0 3/4"	344447'–11 1/2"	530' 10"
94	Rail Transloader/ CD45.16	13932 m³/h			
95	WEST BANK SILO #70/71/CD22.05	12500 m³/h	2397666'–5 9/16"	334413'4'–7 1/4"	512' 10"
96	WEST BANK SILO #72/CD22.06	12500 m³/h	2397666'–5 9/16"	344131'–5 11/16"	512' 10"
97	WEST BANK SILO #84/CD22.07	12500 m³/h	2397695'–4 3/4"	344172'–0 1/4"	512' 10"
98	West Bank Silo Loadout/CD22.08	5437 m³/h	2397669'–7 7/16"	344168'–10 1/2"	512' 10"
99	FLY ASH BIN H169561BH/CD22.09	4672 m³/h	2399083'–1 5/16"	343890'–10 15/16"	565'–0"
100	G168030 BF/CD40.08	3772 m³/h	2399068'–5 7/16"	343928'–11 7/8"	745'–7"
101	Top of Normal Clinker Silo/ CD43.21	13592 m³/h	2398540'–6 9/16"	343583'–11 1/8"	638'–0"
102	O188146 BF/CD43.17	4745 m³/h	2398453'–3 1/2"	343798'–3 5/8"	563'–3"
103	L191136 BF/CD45.15	4112 m³/h	2397995'–6 5/16"	344455'–8 3/8"	522'–7"
104	N.E. PACKER/CD23.01	11966 m³/h	2398038'–0 5/8"	344212'–11 3/4"	552'–2"
105	H170449 BK/CD42.07	500 m³/h	2399036'–4"	343964'–8 7/16"	515'–10"
106	FM REJECT BIN/CD44.17	500 m³/h	2398220'–3 5/8"	344472'–0 5/8"	520'–5"

EXISTING DUST COLLECTORS
DEDUSTED TRUCK LOADING SPOUT
NEW EMISSION POINT
EMISSION POINT IN TUNNEL

N

CTG
Italcementi Group
Servizio Impianti Industriali–Bergamo
"IL PRESENTE DOCUMENTO È PROPRIETÀ DI ITALCEMENTI S.P.A. E NON PUÒ ESSERE RIPRODOTTO O COPIATO"

COMPANY: ESSROC
PLANT: MARTINSBURG
DEPT.: 101

MARTINSBURG NEW LINE
GENERAL PLOT PLAN–EMISSION POINT

DRAWN UP BY	APP'D BY	DATE	PROJECT CODE	DWG N.	REV.	SCALE
FERRARI R.	CHILARDI A.	25.08.2009	F603.C.001	MAR–101–033 WP1		1:960

Zoom 1/960XP

ATTACHMENT C – PROCESS FLOW DIAGRAMS

Attachment C of this Application contains the following process flow diagrams of the Plant:

Process Flow Diagrams

MAR-104-003 Rev08 – Quarry Crushing
Diagram C-1 – Finish Mills Limestone Storage and Handling
Diagram C-2 – Supplementary Portable Crushing System
MAR-105-003 Rev09 – Limestone Mix Storage
MAR-105-004 Rev07 – Raw Mill Feeding
MAR-106-001 Rev09 – Raw Mill
MAR-107-001 Rev09 – Raw Meal
Diagram C-3 – Inert Raw Material Delivery, Storage, and Handling
Diagram C-4 – Additives Delivery, Storage, and Handling
P413 D103/B – Alternate Fuel Feeding System
MAR-106-002 Rev11 – Kiln, Cooler, and Raw Mill Dedusting
MAR-108-003 Rev13 – Kiln
MAR-108-005 Rev07 – Bypass System
MAR-108-016 Rev5 – Bypass Dust System
MAR-108-084 Rev0 – Scrubber System
MAR-109-004 Rev12 – Clinker Storage and Dispatching
MAR-109-005 Rev11 – Mills Feeding Hoppers
Diagram C-5 – Tarped Outdoor Clinker Storage
MAR-109-045 Rev1 – Bypass Dust-Flyash Silos for Finish Mill #3
MAR-110-002 Rev12 – Finish Mill #1
MAR-110-003 Rev11 – Finish Mill #2
MAR-110-023 Rev02 – Grinding Aids Circuit
MAR-110-038 Rev0 – Finish Mill #3
MAR-111-002 Rev12 – Cement Silo and Bulk System
MAR-112-022 Rev0 – New Packing Plant
North East Packer Dust Collection
Diagram C-6 Rail Transloader
14-1-11347.100D-08 – Cement Distribution to Middle Bank Silos
14-1-11347.200D-08 – Cement Withdrawal from Middle Bank Silos
14-1-11347.300D-07 – Middle Bank Silos Cement Extraction - Rail
14-1-11347.400D-03 – Truck Loadout Shipment Bins
14-1-11347.500D-03 – Cement Distribution/Feed System – East Bank Silos
Diagram C-7 – West Bank Silos Dust Collection
MAR-203-004 Rev08 – Coal Mill

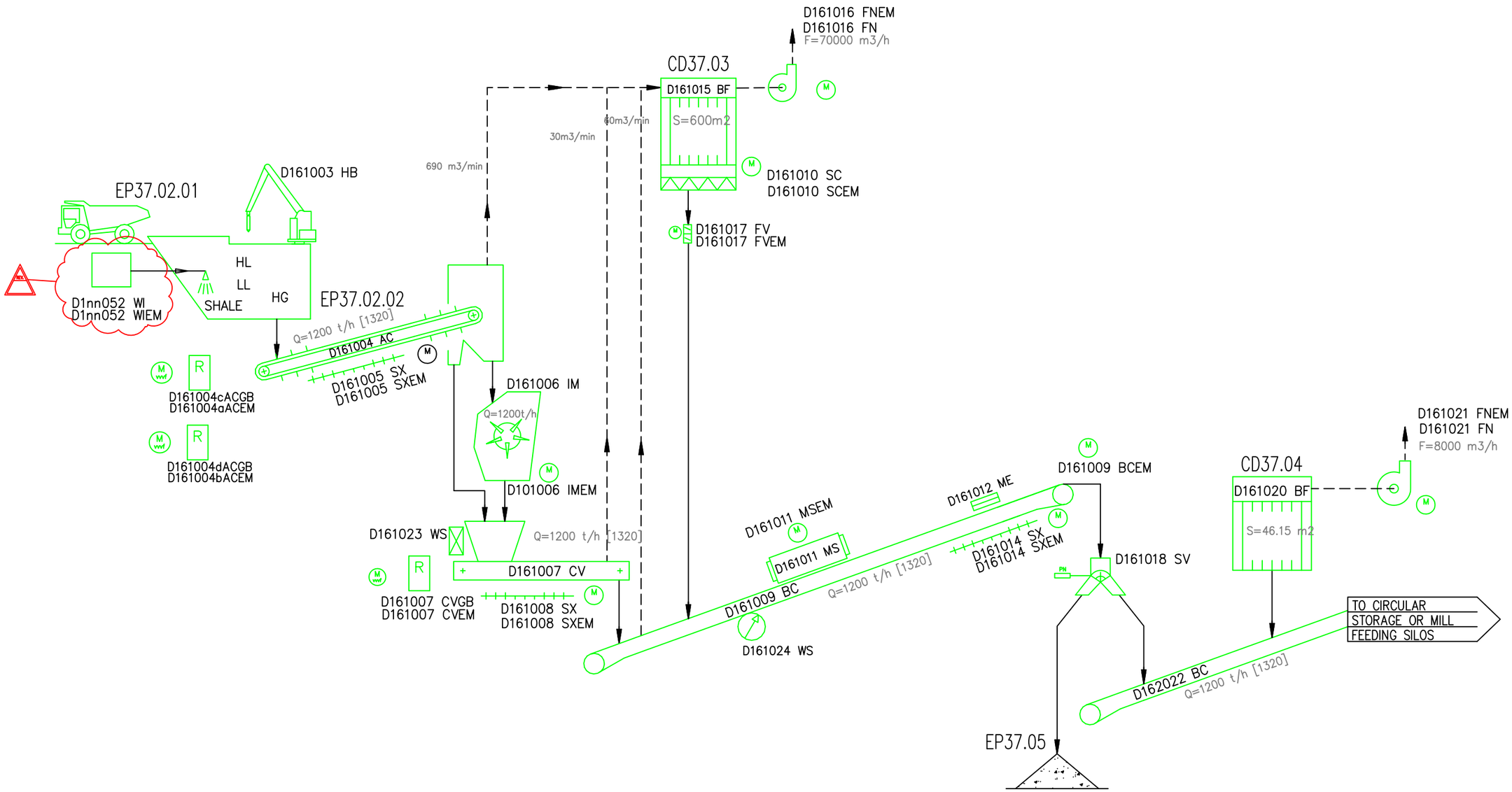

REV.	DESCRIPTION	DRAWN UP BY	APP'D BY	DATE
A	Revised where clouded	FERRARI R.	VENTURELLI L.	04 MAR 09
07	Revised where clouded	VENTURELLI L.	ERASMO M	18 SEP 07
06	Revised where clouded	ERASMO M	ERASMO M	09 FEB 07
04	Secondary feeder removed	ERASMO M	ERASMO M	16 FEB.06
03	Item D1nn012 ME Relocated	ROTA S	ROTA S	26 OTT.05
REV.	DESCRIPTION	DRAWN UP BY	APP'D BY	DATE
REV.	DESCRIPTION	DRAWN UP BY	APP'D BY	DATE

CTG
Italcementi Group
Servizio Impianti Industriali

COMPANY CAPITOL CEMENT CO.
PLANT MARTINSBURG
DEPT. 104
PROJECT CODE F603C001 POS.

NEW PRODUCTION LINE
QUARRY CRUSHING – FLOW SHEET

DRAWN UP BY	APP'D BY	DATE	DWG N.	REV.
Ermidoro	Ambrosini	05.05.2004	MAR–104–003	08

by AUTOCAD A3

DIAGRAM C-1
FINISH MILL LIMESTONE STORAGE AND HANDLING

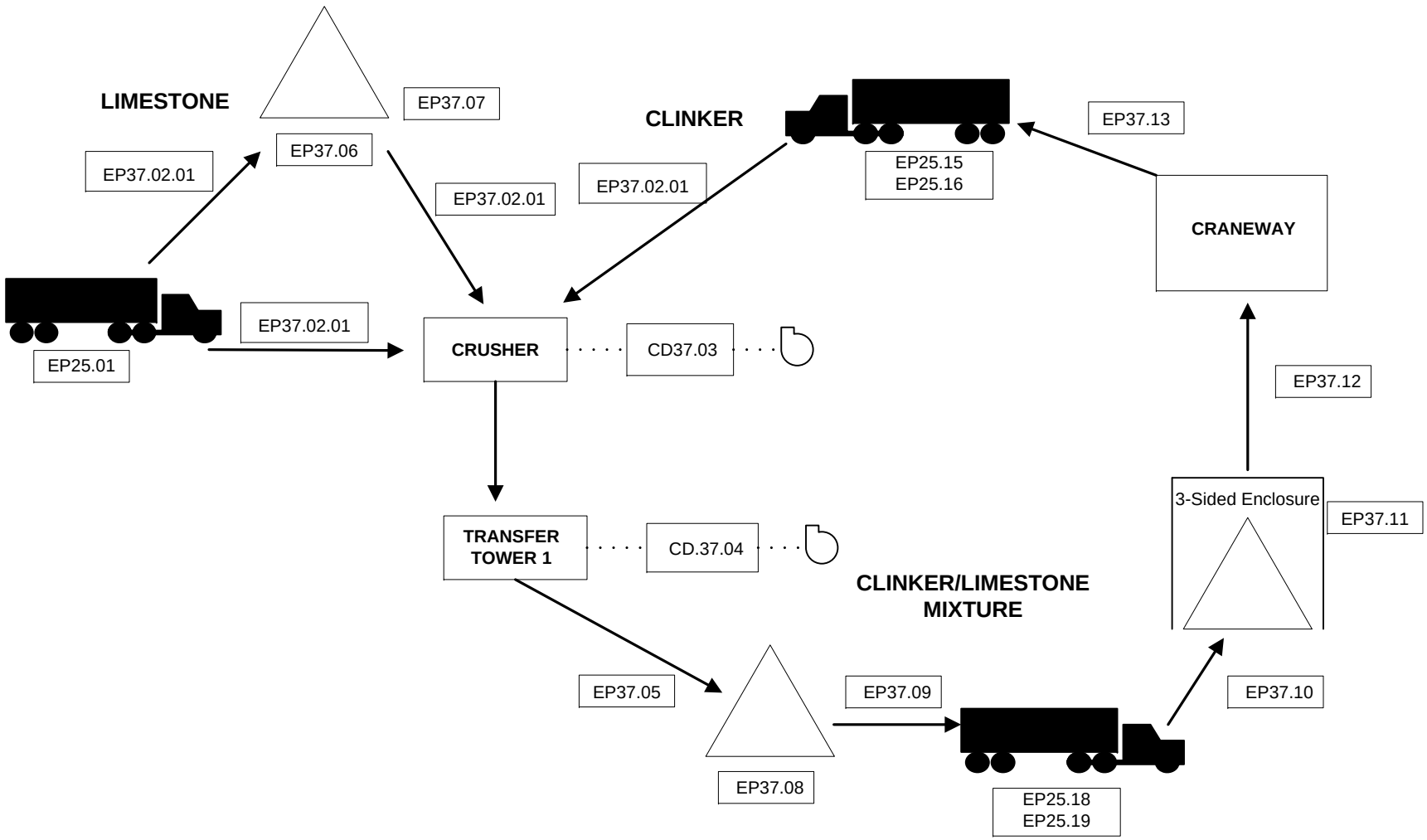

Diagram C-2

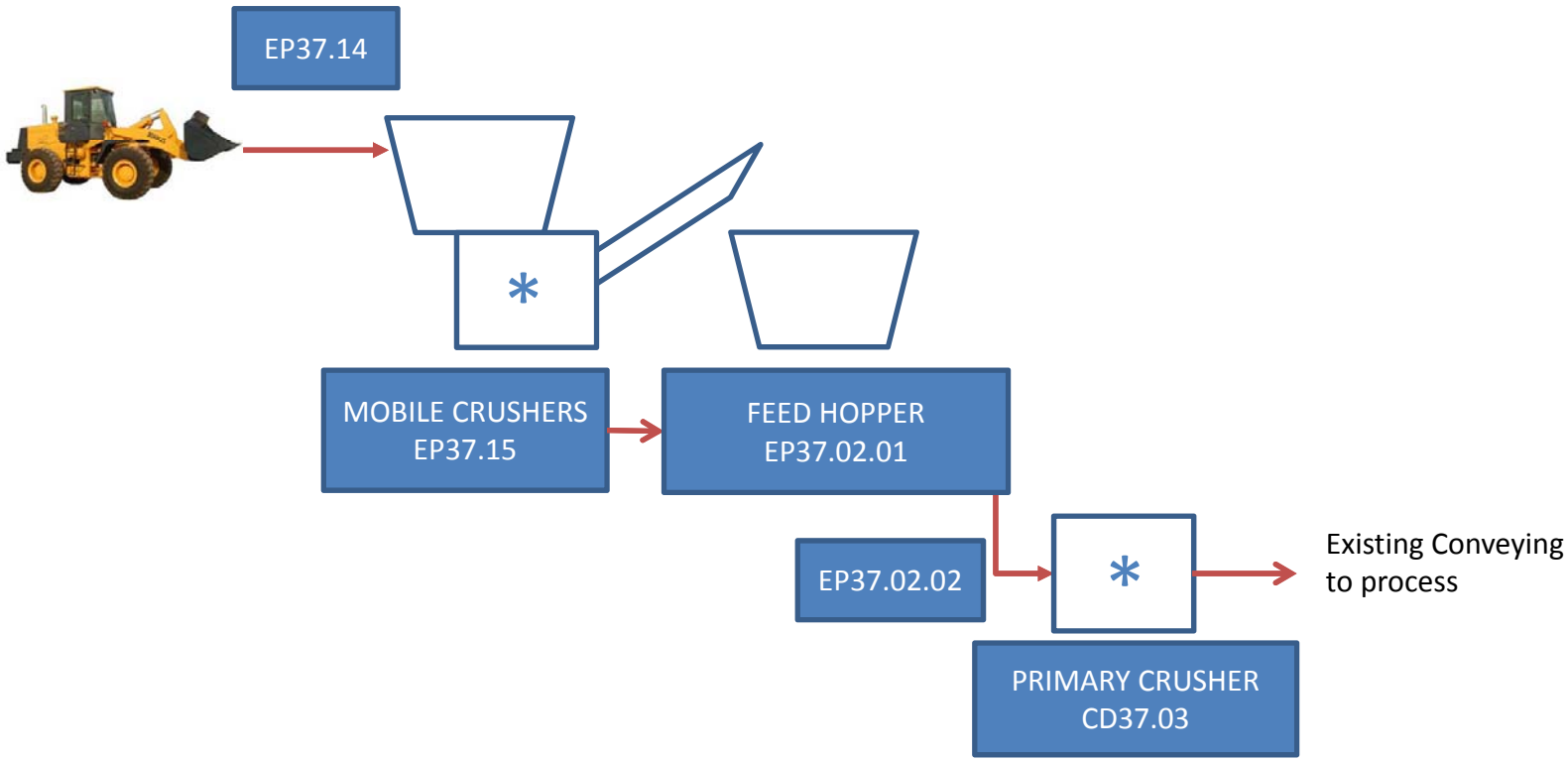

Supplementary Portable Crushing System Flow Diagram

Essroc
Italcementi Group

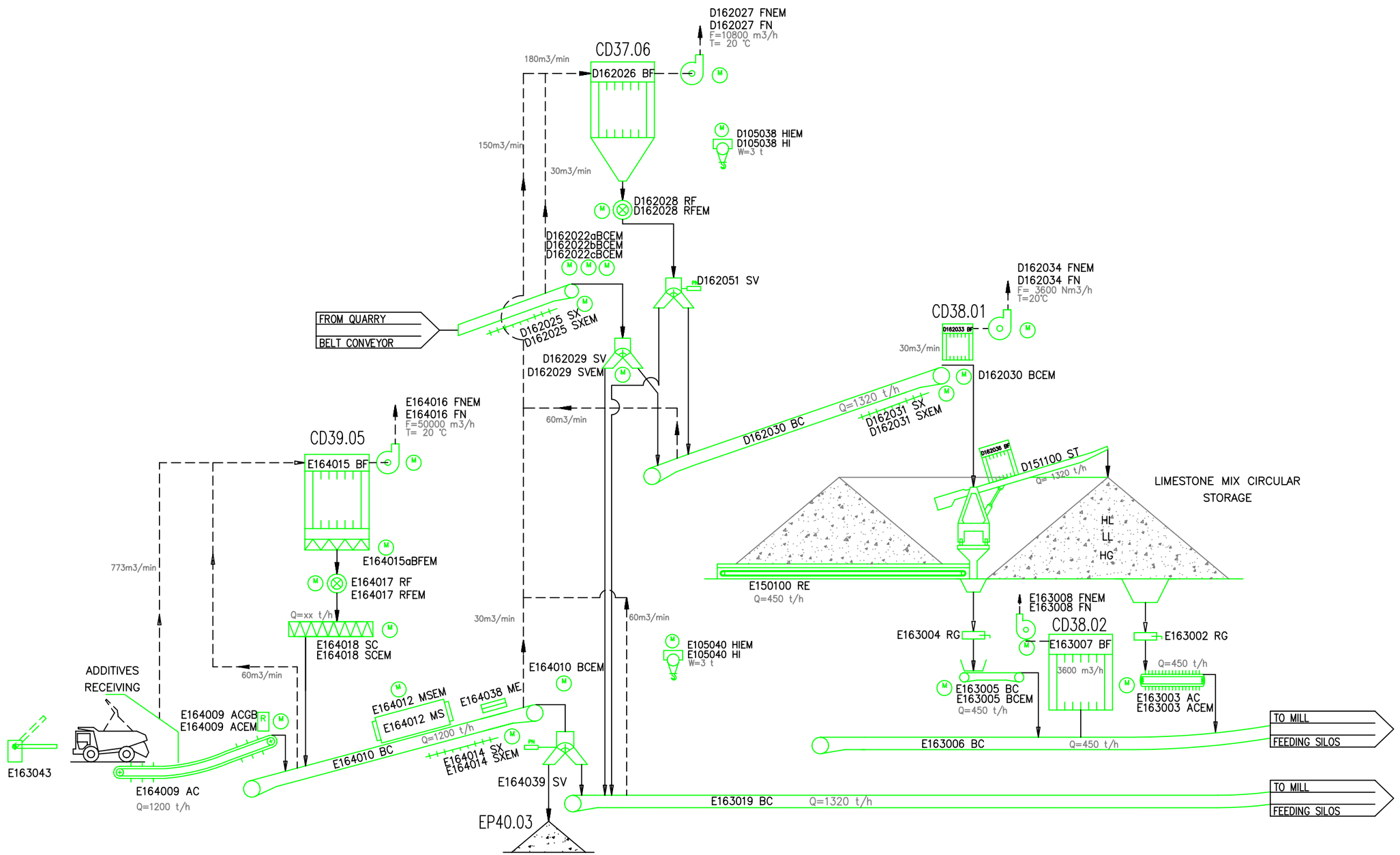

REV.	DESCRIPTION	DRAWN UP BY	APP'D BY	DATE
09	GENERAL REVISION	FERRARI R.	VENTURELLI	03 MAR 09
08	REVISED WHERE CLOUDED	VENTURELLI L.	ERASMO M	07 GEN 08
07	REVISED WHERE CLOUDED	VENTURELLI L.	ERASMO M	18 SEP 07
06	REVISED WHERE CLOUDED	ERASMO M	ERASMO M	09 FEB 07
05	GENERAL REVISION	ERASMO M	ERASMO M	30 SEP.06
04	DUST COLLECTORS FOR POLAR STORAGE ADDED	ERASMO M	ERASMO M	16 FEB.06

CTG
Italcementi Group
Servizio Impianti Industriali

COMPANY CAPITOL CEMENT CO.
PLANT MARTINSBURG
DEPT. 105
PROJECT CODE F603C001 POS.

NEW PRODUCTION LINE
LIMESTONE MIX STORAGE – FLOW SHEET

DRAWN UP BY	APP'D BY	DATE	DWG N.	REV.
Ermidoro	Ambrosini	05.05.2004	MAR–105–003	09

by AUTOCAD A3

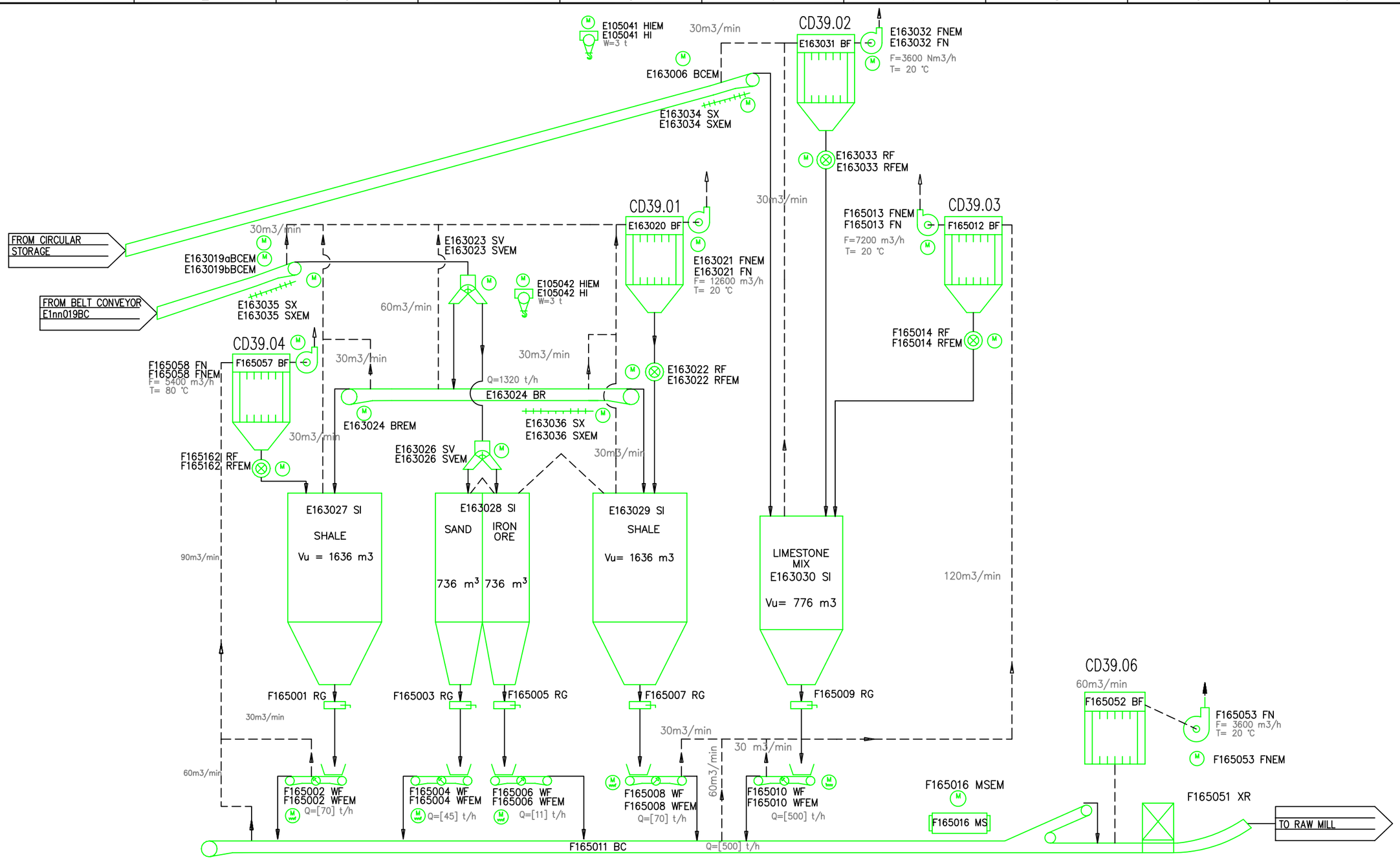

REV.	DESCRIPTION	DRAWN UP BY	APP'D BY	DATE
07	General Revision	FERRARI R.	VENTURELLI	03 MAR 09
06	Revised where clouded	ERASMO M.	ERASMO M.	07 FEB 07
05	General Revision	ERASMO M.	ERASMO M.	30 SEP 06
04	General Revision	ERASMO M.	ERASMO M.	06 APR 06

CTG
Italcementi Group
Servizio Impianti Industriali

COMPANY CAPITOL CEMENT CO.
PLANT MARTINSBURG
DEPT. 105
PROJECT CODE F603C001 POS.

NEW PRODUCTION LINE
RAW MILL FEEDING – FLOW SHEET

DRAWN UP BY	APP'D BY	DATE	DWG N.	REV.
Ermidoro	Ambrosini	05.05.2004	MAR–105–004	07

by AUTOCAD A3

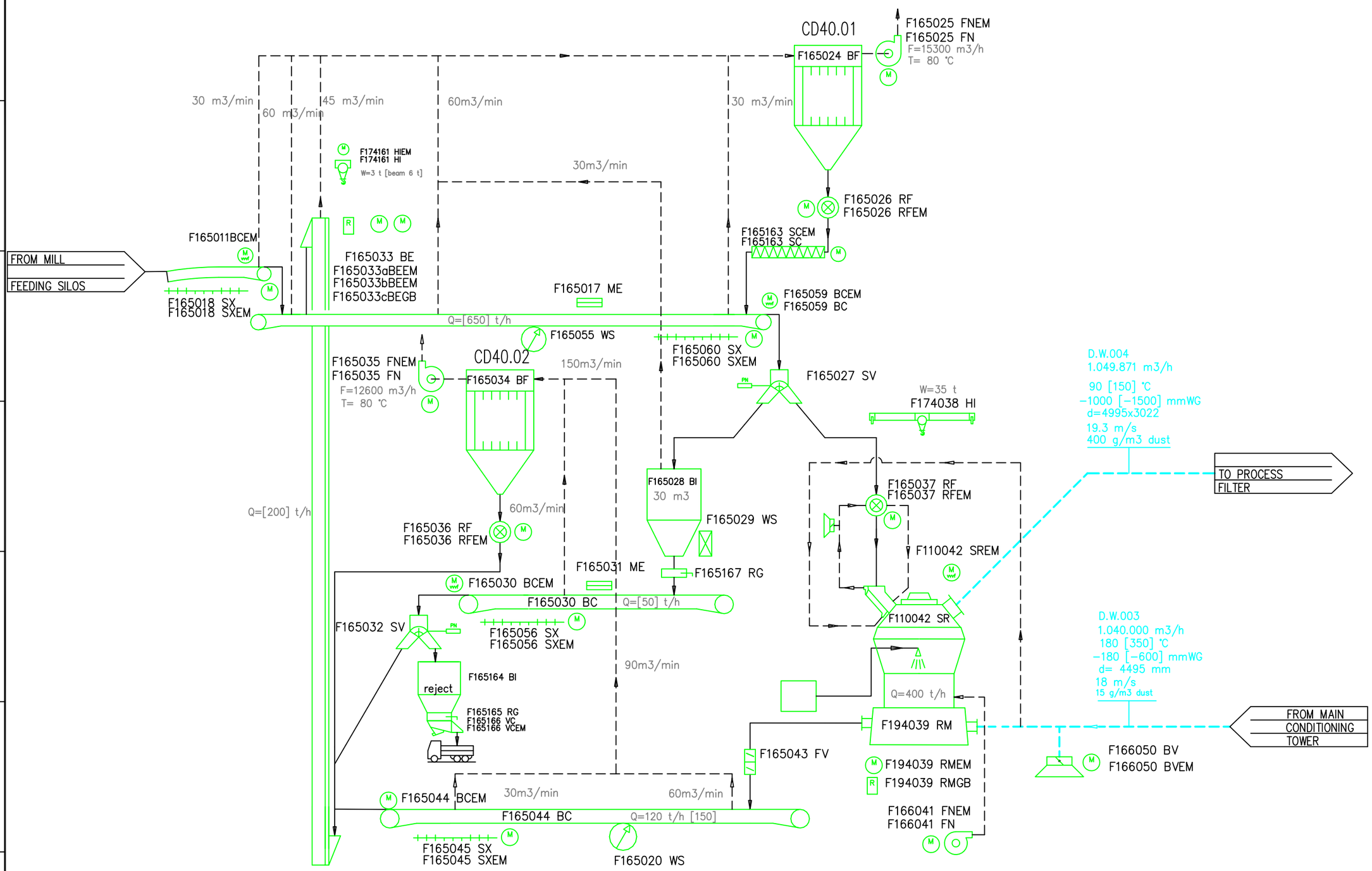

09	General Revision	FERRARI R.	VENTURELLI	03 MAR 09
08	Revised where clouded	ERASMO M.	ERASMO M.	08 GEN 08
07	Revised where clouded	ERASMO M.	ERASMO M.	30 LUG 07
06	Revised where clouded	ERASMO M.	ERASMO M.	29 NOV 06
05	General Revision	ERASMO M.	ERASMO M.	30 SEP 06
04	General Revision	ERASMO M.	ERASMO M.	06 APR 06

CTG
Italcementi Group
Servizio Impianti Industriali

COMPANY CAPITOL CEMENT CO.
PLANT MARTINSBURG
DEPT. 106
PROJECT CODE F603C001 POS.

NEW PRODUCTION LINE
RAW MILL – FLOW SHEET

DRAWN UP BY	APP'D BY	DATE	DWG N.	REV.
Ermidoro	Ambrosini	11.05.2004	MAR-106-001	09

by AUTOCAD A3

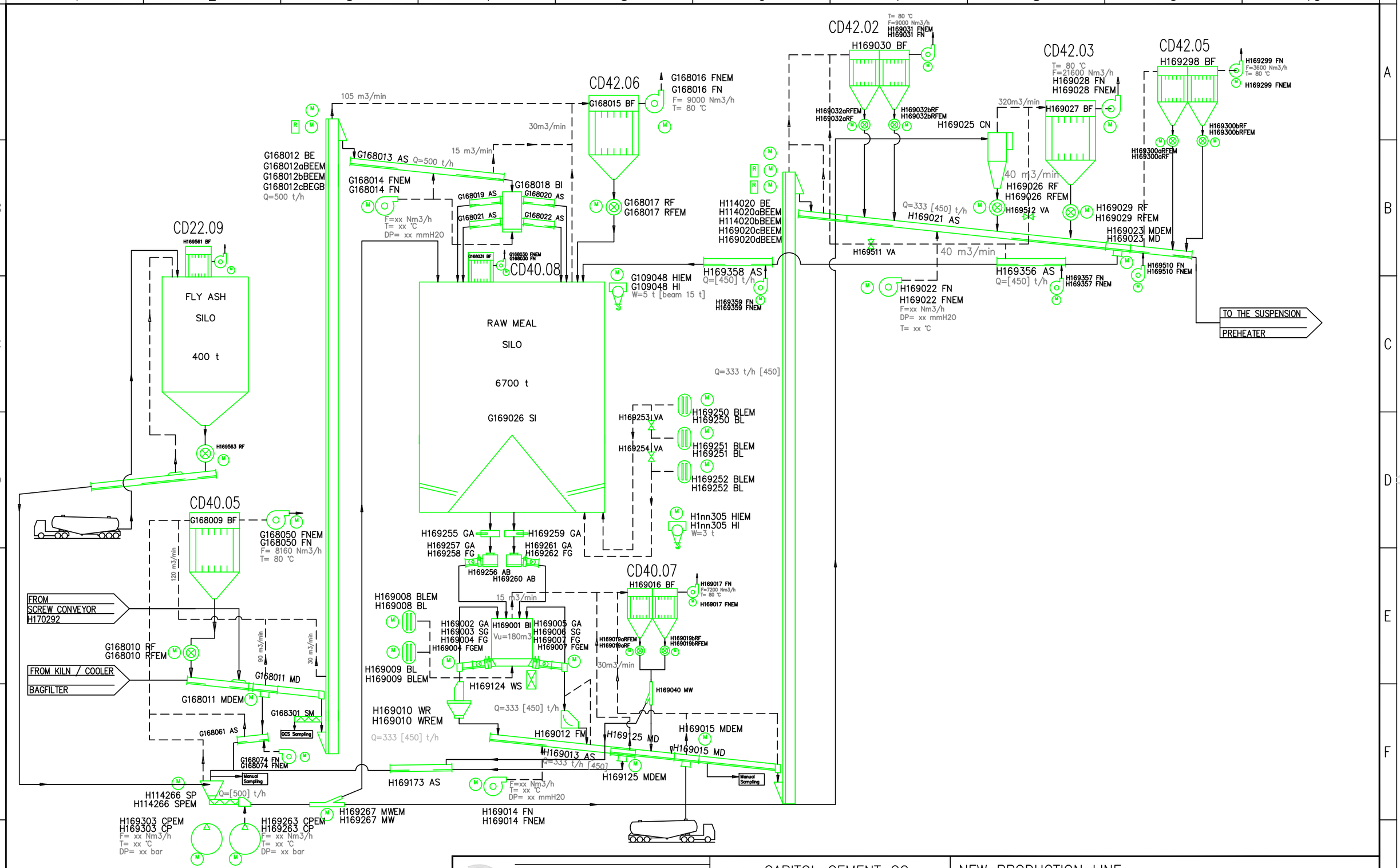

09	GENERAL REVISION	VISCARDI	VISCARDI	29.10.2010
08	General Revision	FERRARI R.	VENTURELLI	03 MAR 09
07	Revised where clouded	ERASMO M	ERASMO M.	11 LUG 07
06	Revised where clouded	ERASMO M	ERASMO M.	09 FEB 07
05	General Revision	ERASMO M	ERASMO M.	30 SEP 06

CTG
Italcementi Group
Servizio Impianti Industriali

COMPANY CAPITOL CEMENT CO.
PLANT MARTINSBURG
DEPT. 107
PROJECT CODE F603C001 POS.

NEW PRODUCTION LINE
RAW MEAL – FLOW SHEET

DRAWN UP BY	APP'D BY	DATE	DWG N.	REV.
Ermidoro	Ambrosini	12.05.2004	MAR–107–001	09

by AUTOCAD A3

DIAGRAM C-3
INERT RAW MATERIAL DELIVERY, STORAGE, AND HANDLING

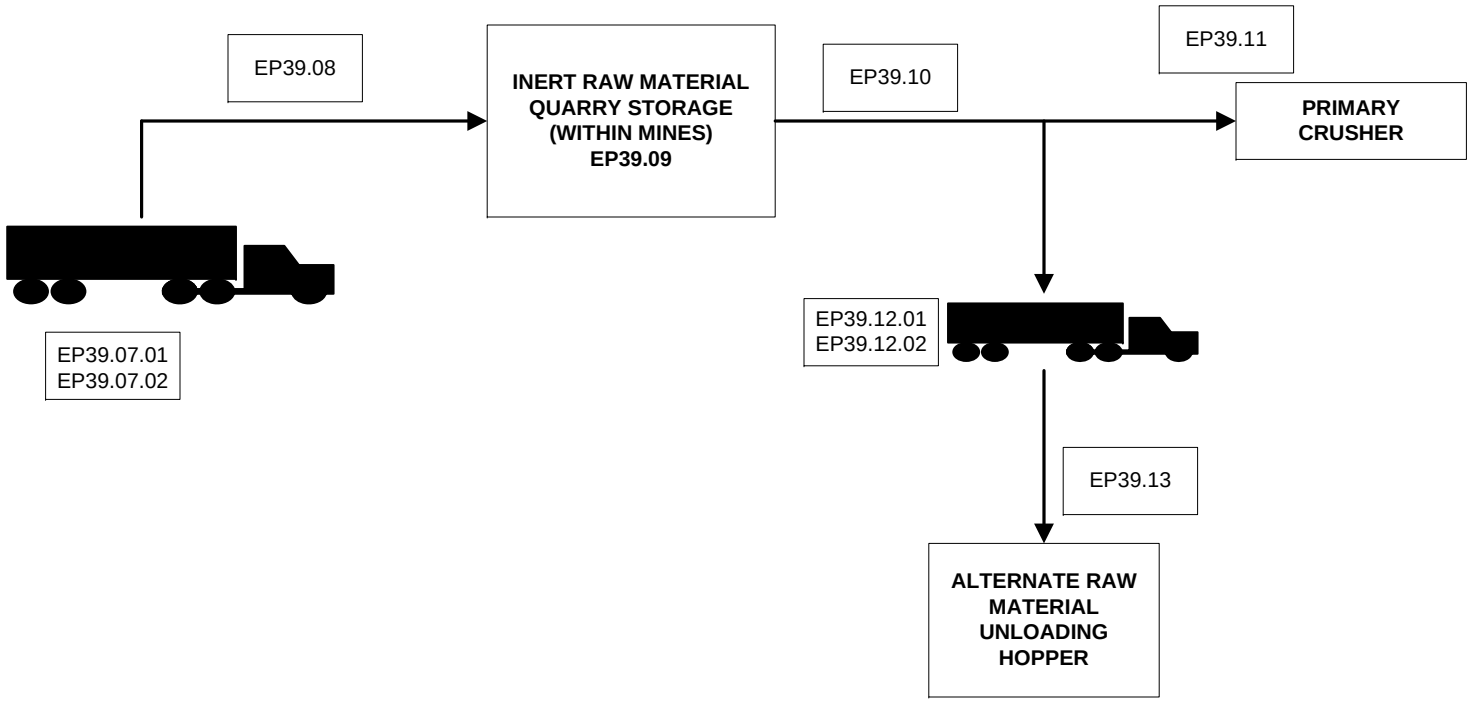

DIAGRAM C-4
ADDITIVES DELIVERY, STORAGE, AND HANDLING

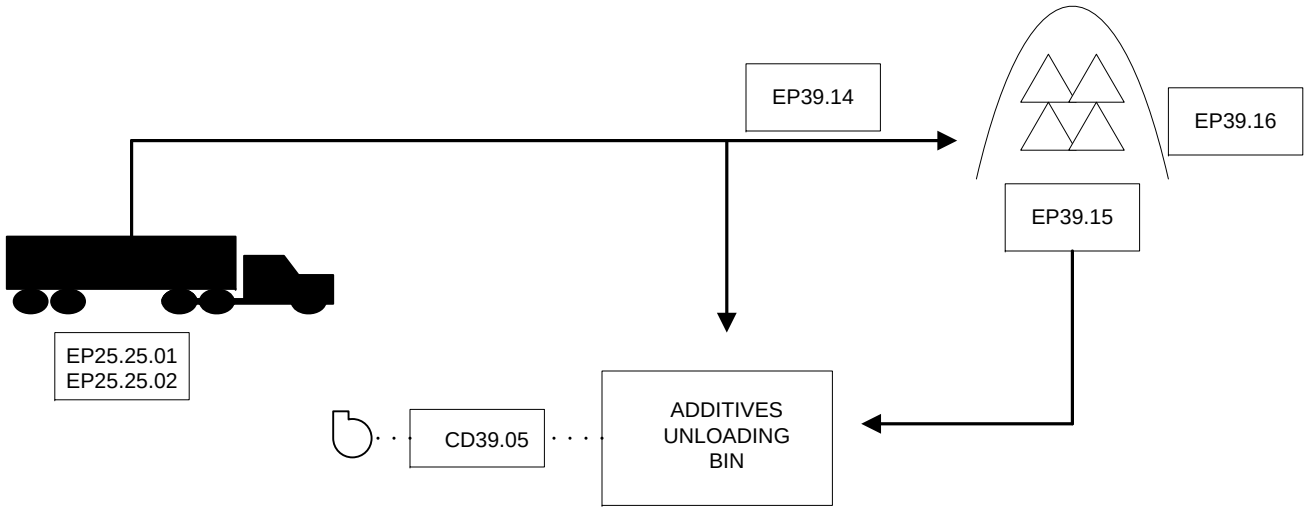

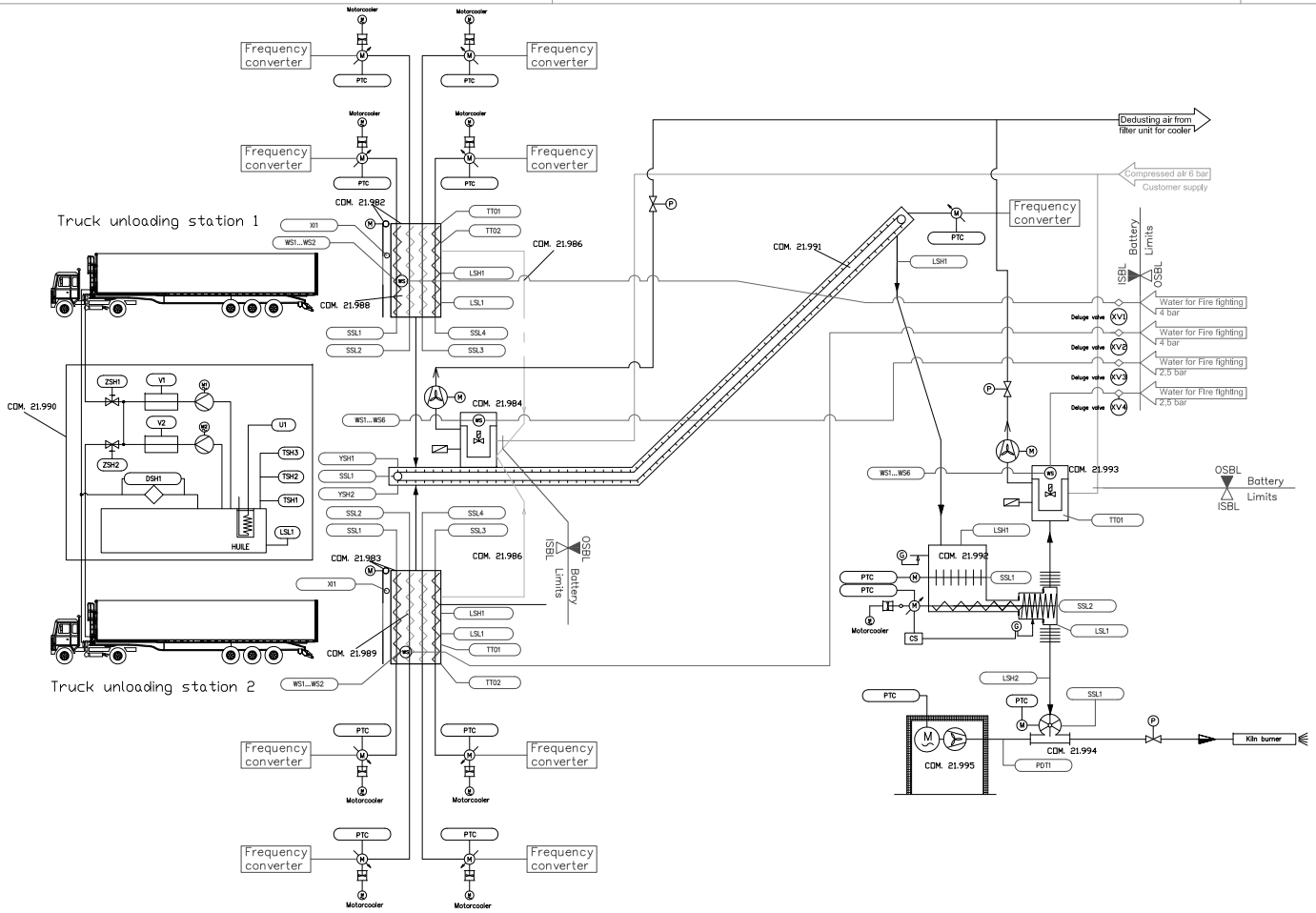

KEY	
ISBL	InSide Battery Limit – Entsorga scope of work
OSBL	OutSide Battery Limit – ESSROC scope of work

ESSROC QUESTIONS	
QUESTION	ANSWER
The dust duct should automatic have a valve to close ducts when AF system is OFF	Added pneumatic shut–off gates. Interlocking has to be clarified
Are there a shut off valves between docking stations and dust collector?	No.
Please tell us what triggers water spray in docking station and bag filter. Do we have any sensor to detect fire?	Added Temperature sensor and water sprinkler
Where is a water control system with five control valves on this drawing?	Added four control valve (XV1..XV4), because we have only 4 equipments requiring extinguishment: – n°2 docking stations; – n°2 bag filters.
What is PTC?	Motor Limit Temperature sensor
Contract asks for a shut–off valve on a pneumatic line.	Added ball–valve

NOTE:

Dimensions in mm; elevations in foot;

TOLERANCES: ±1cm FOR CIVIL WORKS
±1mm FOR MECHANICAL WORKS

DO NOT TAKE DIMENSIONS IN SCALE ON DRAWING.
ALL MODIFICATIONS SHALL BE AUTHORIZED BY ENTSORGA ITALIA S.p.A.

DO NOT USE THIS DRAWING FOR CONSTRUCTION UNLESS EXPLICITY INDICATED IN THE REVISIONS BOX

ANY COMMENTS ON THIS DOCUMENT SHALL BE MADE IN WRITING TO ENTSORGA WITHIN SEVEN DAYS OF RECEIPT. THE RECIPIENT ACKNOWLEDGES AND ACCEPTS THAT IF NO COMMENTS ARE SUBMITTED WITHIN THIS TIMESCALE THE DOCUMENT SHALL BE DEEMED ACCEPTED

REV.	DATE	Drawn	Checked	Approved	Description
B	19/08/14	WF	AR	PPCM	FOR COMMENTS
A	14/08/14	WF	AR	PPCM	FOR COMMENTS
0	05/08/14	MD	WF	PPCM	FIRST EMISSION

ENTSORGA
sistemi per l'ambiente
Str. Prov. per Castelnuovo S., 7
15057 Tortona (AL)
Tel. 0131.811383
Fax 0131.873281
email info@entsorga.it

PROJECT: Martinsburg feeding system – ESSROC –

DRAWING TITLE: P&ID

REQUISITION	DATE:	SCALE:	DRG. N°
–	05/08/2014	NN	P413 D103/B

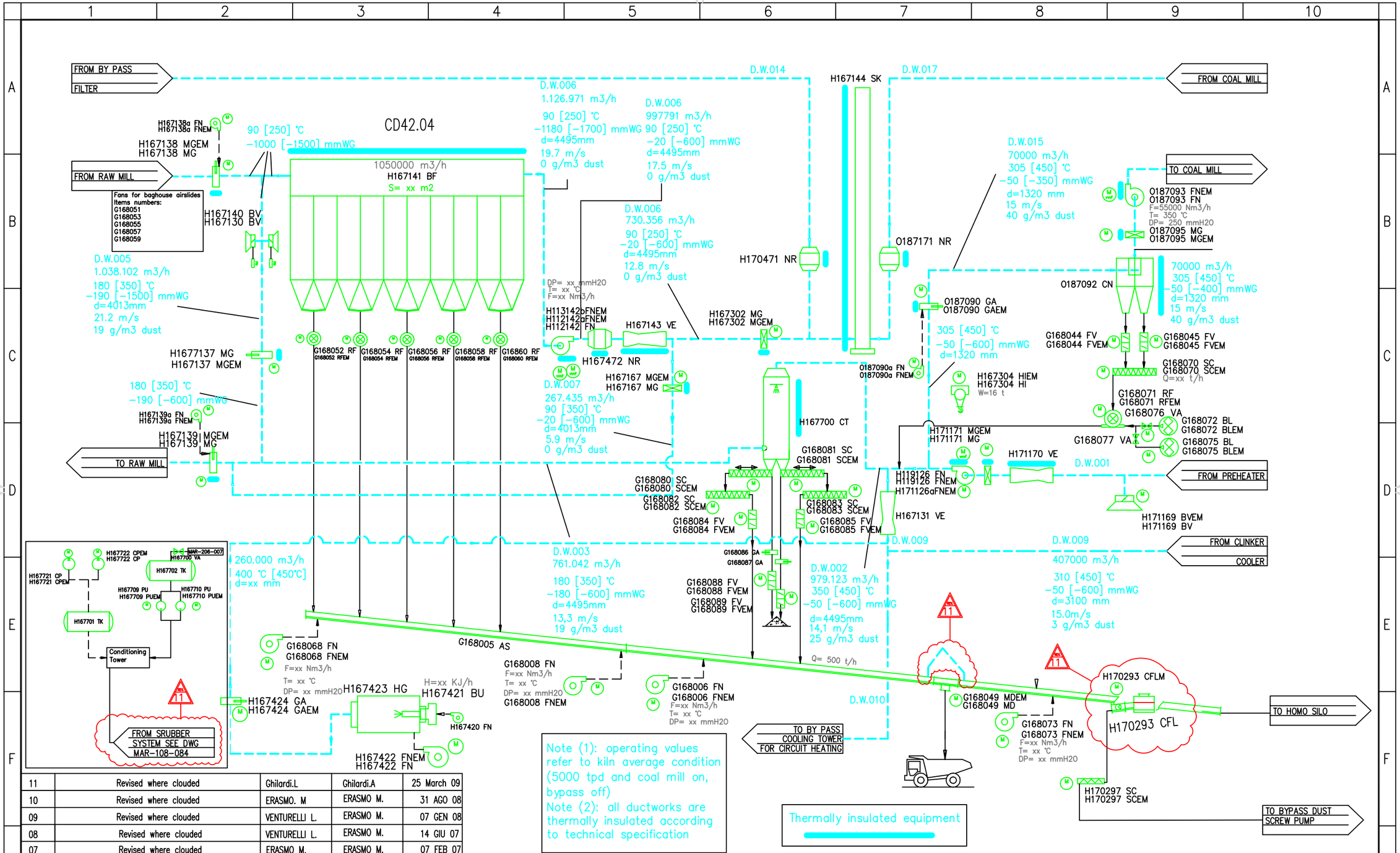

REV.	DESCRIPTION	DRAWN UP BY	APP'D BY	DATE
11	Revised where clouded	Ghilardi.L	Ghilardi.A	25 March 09
10	Revised where clouded	ERASMO. M	ERASMO M.	31 AGO 08
09	Revised where clouded	VENTURELLI L.	ERASMO M.	07 GEN 08
08	Revised where clouded	VENTURELLI L.	ERASMO M.	14 GIU 07
07	Revised where clouded	ERASMO M.	ERASMO M.	07 FEB 07
06	General Revision	ERASMO M.	ERASMO M.	30 SEP 06
05	General Revision	ERASMO M.	ERASMO M.	06 APR. 06
04	Item H167128 BV DELETED	ROTA S.	ROTA S	26 OTT.05
REV.	DESCRIPTION	DRAWN UP BY	APP'D BY	DATE
REV.	DESCRIPTION	DRAWN UP BY	APP'D BY	DATE
REV.	DESCRIPTION	DRAWN UP BY	APP'D BY	DATE

CTG
Italcementi Group
Servizio Impianti Industriali

COMPANY CAPITOL CEMENT CO.
PLANT MARTINSBURG
DEPT. 106
PROJECT CODE F603C001 POS.

NEW PRODUCTION LINE
KILN, COOLER AND RAW MILL DEDUSTING – FLOW SHEET

DRAWN UP BY	APP'D BY	DATE	DWG N.	REV.
Ermidoro	Ambrosini	11.05.2004	MAR-106-002	11

by AUTOCAD A3

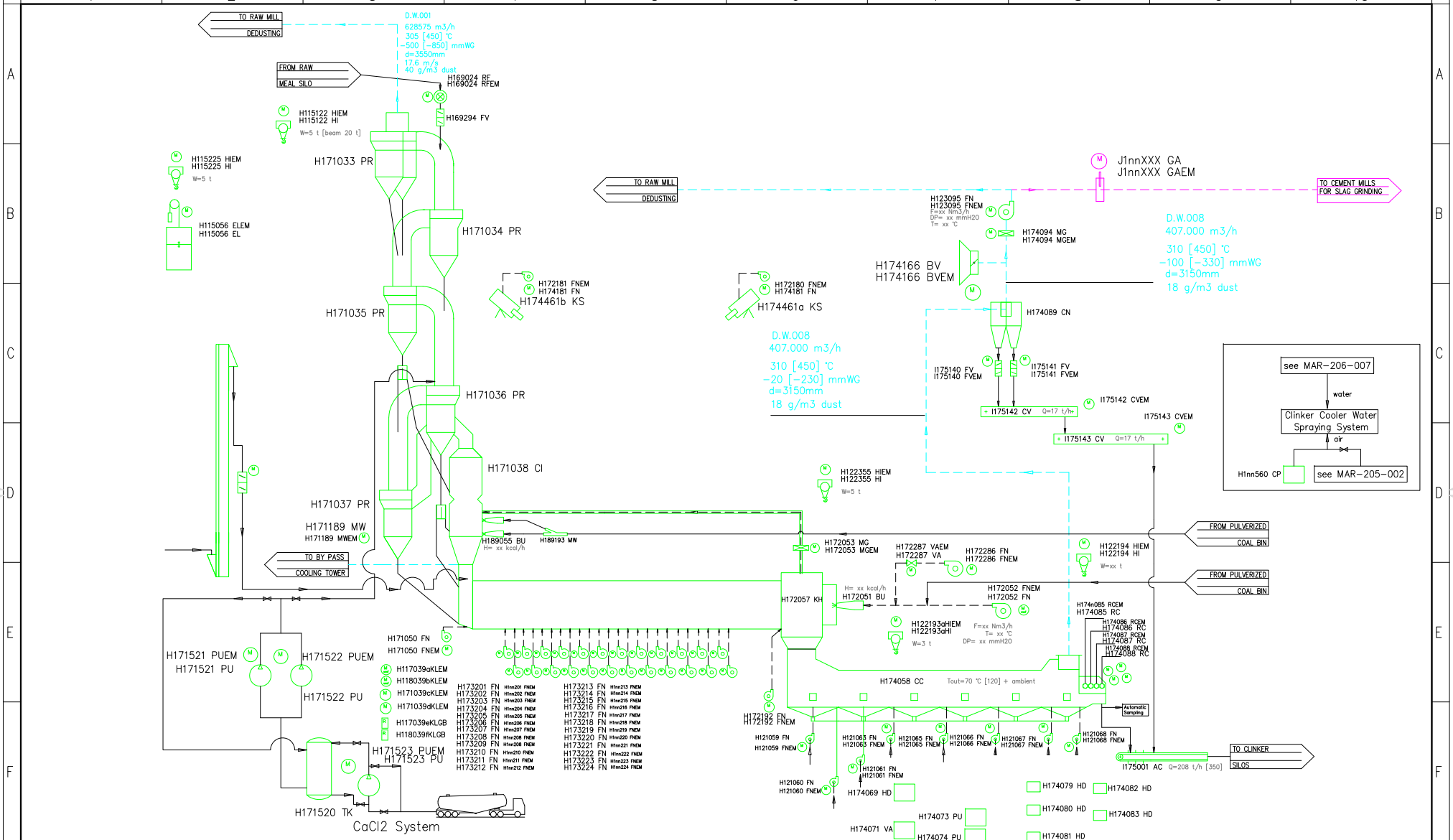

12	GENERAL REVISION	VISCARDI	VISCARDI	29.10.2010
11	Revised where clouded	Ghilardi.L	Ghilardi.A	25 March 09
10	Revised where clouded	ERASMO M.	ERASMO M.	31 AGO 08
09	Revised where indicated	ERASMO M.	ERASMO M.	08 GEN 08
08	Revised where indicated	ERASMO M.	ERASMO M.	17 SET 07
07	Revised where clouded	ERASMO M.	ERASMO M.	07 FEB. 07
06	General Revision	ERASMO M.	ERASMO M.	30 SEP. 06
05	General Revision	ERASMO M.	ERASMO M.	06 APR. 06

CTG
Italcementi Group
Servizio Impianti Industriali

COMPANY CAPITOL CEMENT CO.
PLANT MARTINSBURG
DEPT. 108
PROJECT CODE F603C001 POS.

NEW PRODUCTION LINE
KILN – FLOW SHEET

DRAWN UP BY	APP'D BY	DATE	DWG N.	REV.
Ermidoro	Ambrosini	14.05.2004	MAR-108-003	13

by AUTOCAD A3

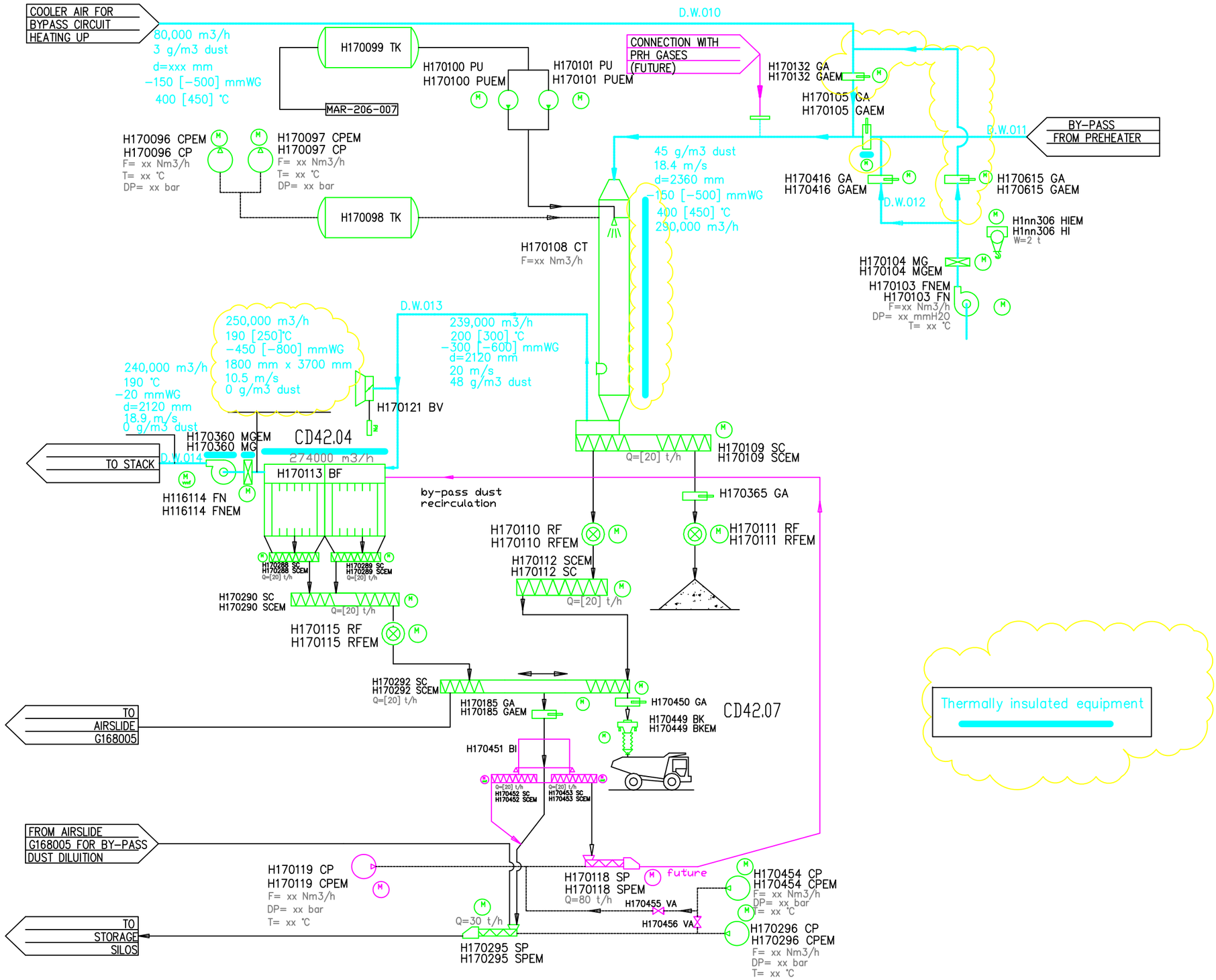

07	Revised where clouded	ERASMO M.	ERASMO M.	06 SEP 08
06	Revised where clouded	VENTURELLI L.	ERASMO M.	18 SEP 07
05	Revised where clouded	ERASMO M.	ERASMO M.	07 FEB 07
04	General Revision	ERASMO M.	ERASMO M.	30 SEP 06
03	General Revision	ERASMO M.	ERASMO M.	06 APR 06
02	Item H1nn121 MG added	ROTA S	ROTA S	26 OTT 05

CTG
Italcementi Group
Servizio Impianti Industriali

COMPANY CAPITOL CEMENT CO.
PLANT MARTINSBURG
DEPT. 108
PROJECT CODE F603C001 POS.

NEW PRODUCTION LINE
BY PASS SYSTEM

DRAWN UP BY	APP'D BY	DATE	DWG N.	REV.
ERASMO M.	ERASMO M.	19.07.2005	MAR-108-005	07

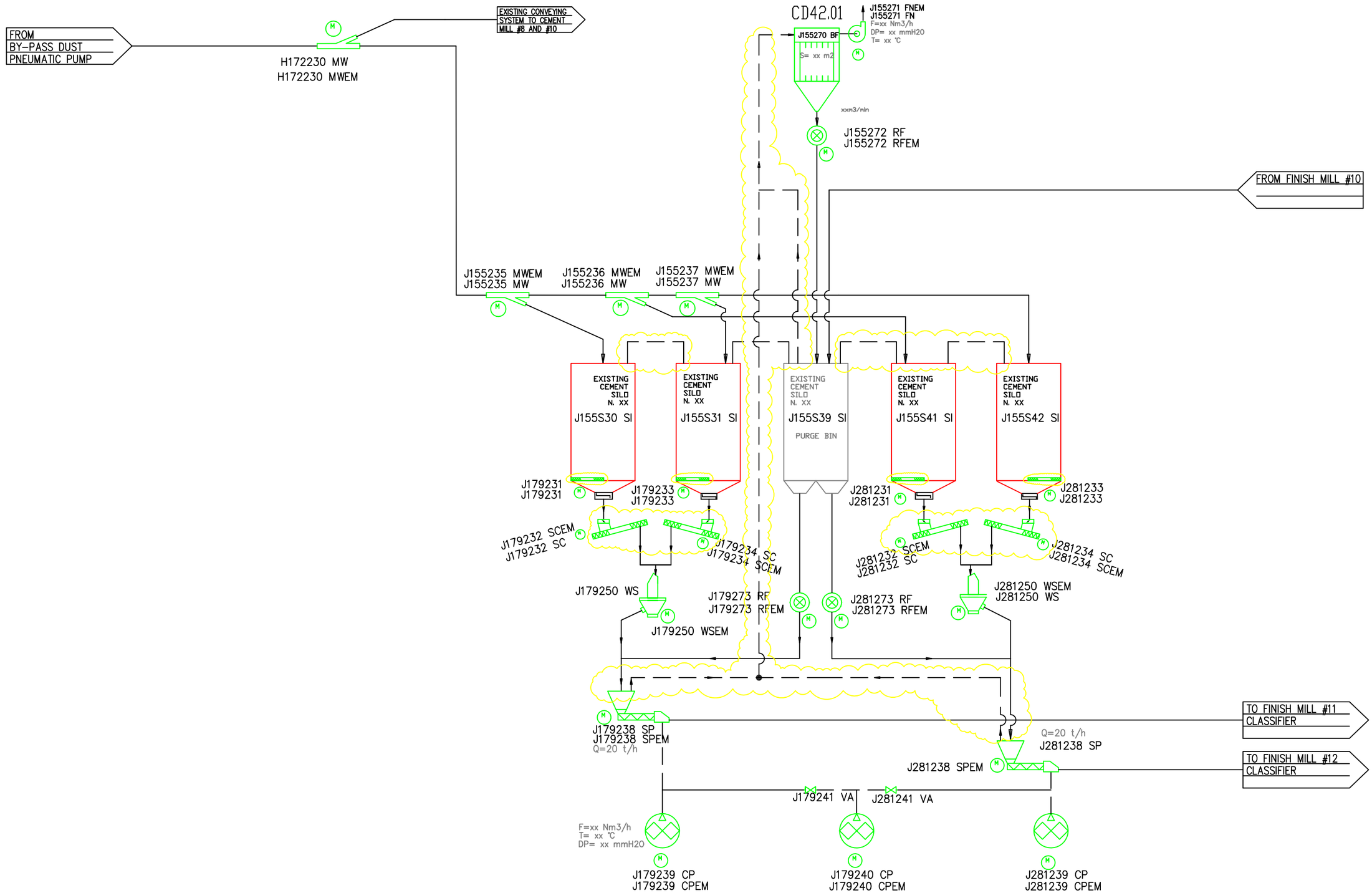

05	Revised where clouded	Ghilardi L.	Ghilardi A.	06 March 08
04	Revised where clouded	VENTURELLI L	ERASMO M	06 SEP 08
03	General Revision	VENTURELLI L	ERASMO M	07 GEN 08
02	General Revision	VIVEK R	ERASMO M	14 AUG 07
01	Revised where clouded	ERASMO M	ERASMO M	07 FEB 07
00	First Emission	ERASMO M	ERASMO M	30 SEP 06

CTG
Italcementi Group
Servizio Impianti Industriali

COMPANY CAPITOL CEMENT CO.
PLANT MARTINSBURG
DEPT. 108
PROJECT CODE F603C001 POS.

5000 TPD NEW LINE
BY PASS DUST SYSTEM FLOW-SHEET

DRAWN UP BY	APP'D BY	DATE	DWG N.	REV.
ERASMO M.	ERASMO M.	11.07.2006	MAR-108-016	05

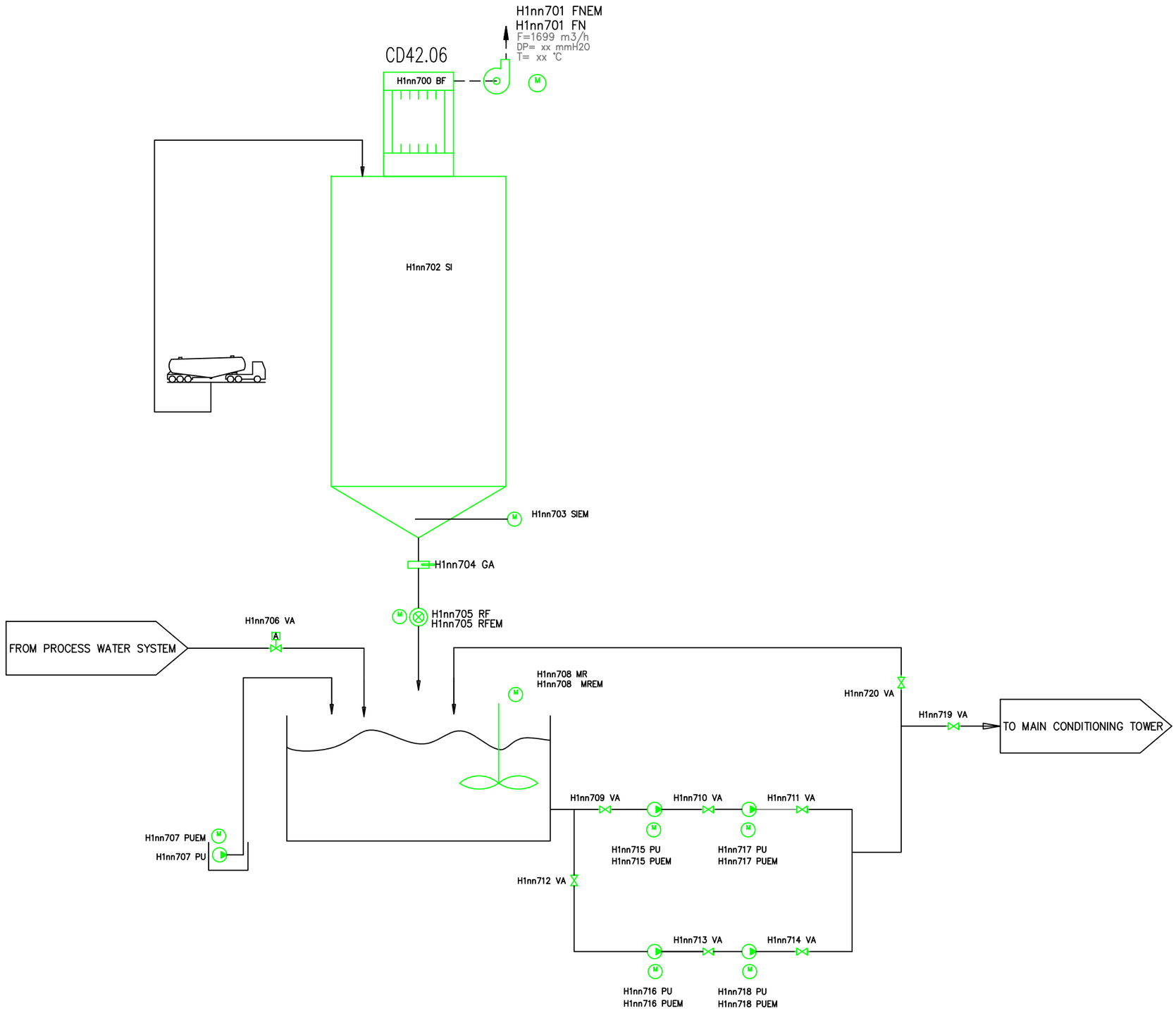

CTG
Italcementi Group
Servizio Impianti Industriali

COMPANY	CAPITOL CEMENT CO.
PLANT	MARTINSBURG
DEPT.	108
PROJECT CODE	F603C001
POS.	

NEW PRODUCTION LINE
SCRUBBER SYSTEM – FLOW SHEET

DRAWN UP BY	APP'D BY	DATE	DWG N.	REV.
Ferrari	Clemenzi	26/03/09	MAR–108–0840	00

REV.	DESCRIPTION	DRAWN UP BY	APP'D BY	DATE

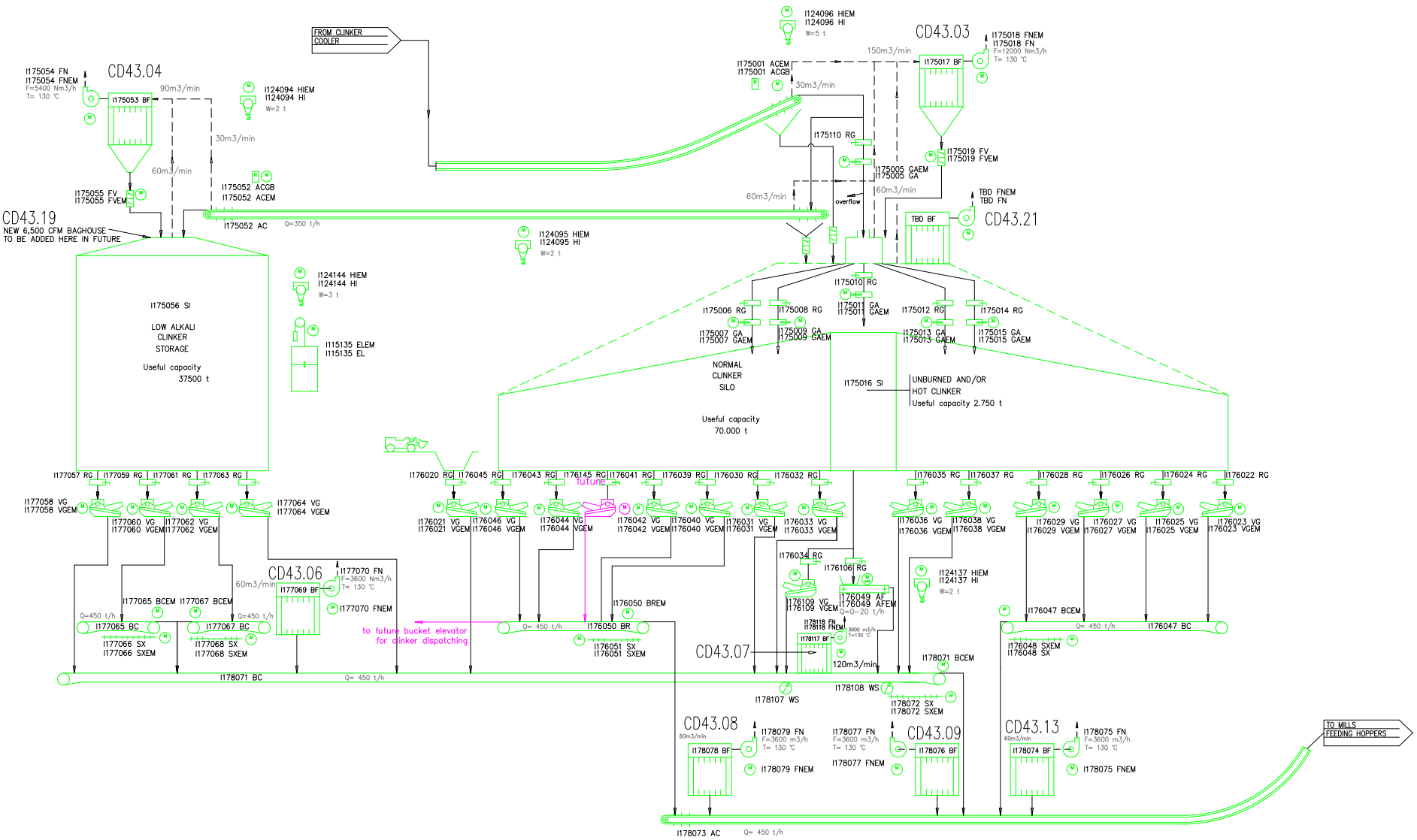

REV.	DESCRIPTION	DRAWN UP BY	APP'D BY	DATE
11	GENERAL REVISION	VISCARDI	VISCARDI	29.10.2010
10	Revised where clouded	FERRARI R.	VENTURELLI L	06 MAR 09
09	Revised where clouded	VENTURELLI L.	ERASMO M.	07 GEN 08
08	Revised where clouded	VENTURELLI L.	ERASMO M.	18 SEP 07
07	Revised where clouded	ERASMO M.	ERASMO M.	07 FEB 07
06	GENERAL REVISION	ERASMO M.	ERASMO M.	30 SEP 06

CTG
Italcementi Group
Servizio Impianti Indutriali

COMPANY CAPITOL CEMENT CO.
PLANT MARTINSBURG
DEPT. 109
PROJECT CODE F603C001 POS.

NEW PRODUCTION LINE
CLINKER STORAGE AND DISPATCHING

DRAWN UP BY	APP'D BY	DATE	DWG N.	REV.
Ermidoro	Ambrosini	20.05.2004	MAR-109-00412	

by AUTOCAD A3

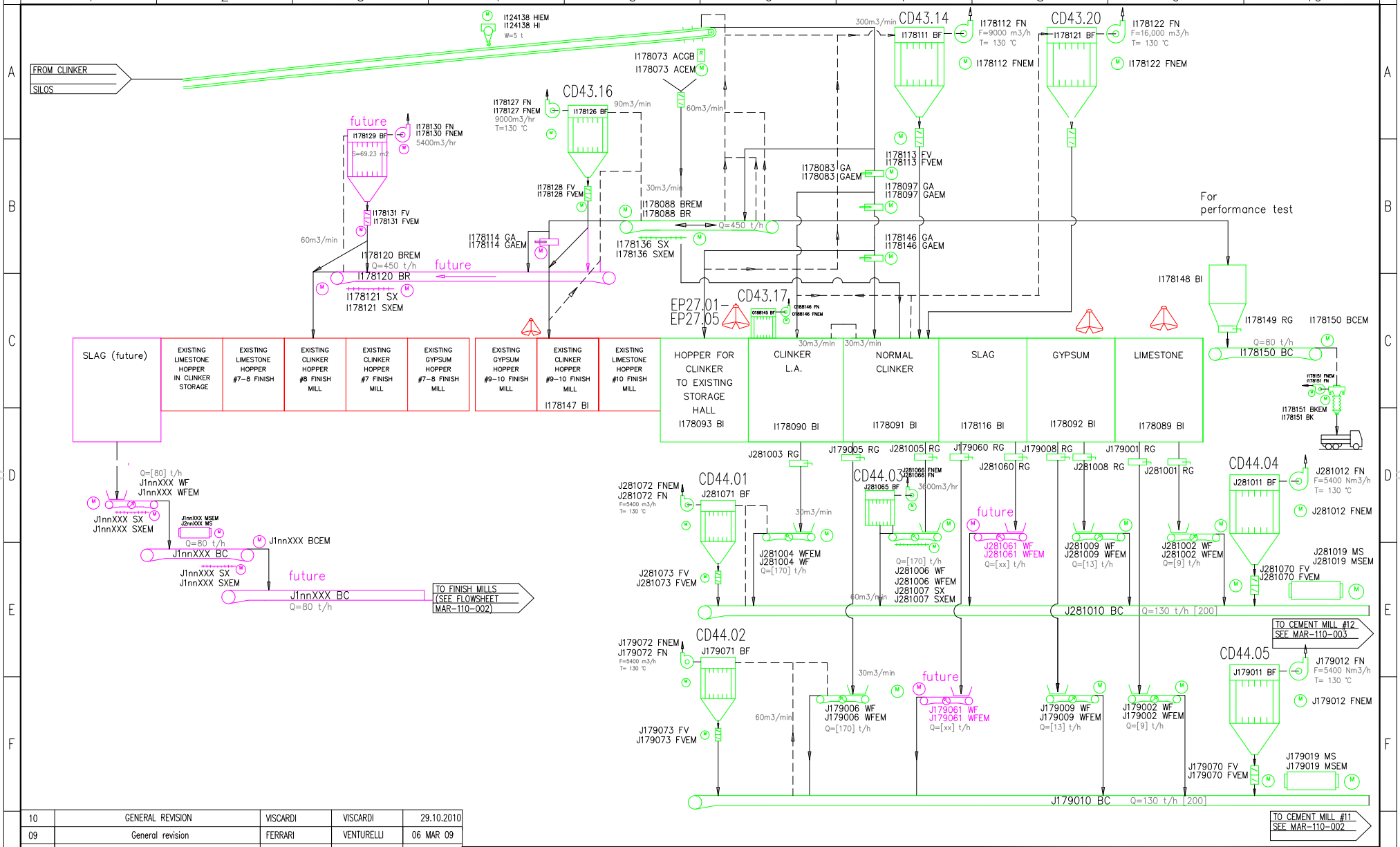

REV.	DESCRIPTION	DRAWN UP BY	APP'D BY	DATE
10	GENERAL REVISION	VISCARDI	VISCARDI	29.10.2010
09	General revision	FERRARI	VENTURELLI	06 MAR 09
08	Revised where clouded	ERASMO M	ERASMO M	06 SEP 08
07	Revised where clouded	ERASMO M	ERASMO M	07 FEB 07
06	GENERAL REVISION	ERASMO M	ERASMO M	30 SEP 06
05	GENERAL REVISION	ERASMO M	ERASMO M	16 DIC 05
04	GENERAL REVISION – CLINKER DISPATCHING ADDED	ROTA S	ROTA S	20 OTT 05

CTG
Italcementi Group
Servizio Impianti Industriali

COMPANY CAPITOL CEMENT CO.
PLANT MARTINSBURG
DEPT. 109
PROJECT CODE F603C001 POS.

NEW PRODUCTION LINE
MILLS FEEDING HOPPERS – FLOW SHEET

DRAWN UP BY	APP'D BY	DATE	DWG N.	REV.
Ermidoro	Ambrosini	24.05.2004	MAR–109–005	11

by AUTOCAD A3

DIAGRAM C-5
TARPED OUTDOOR CLINKER STORAGE AND HANDLING

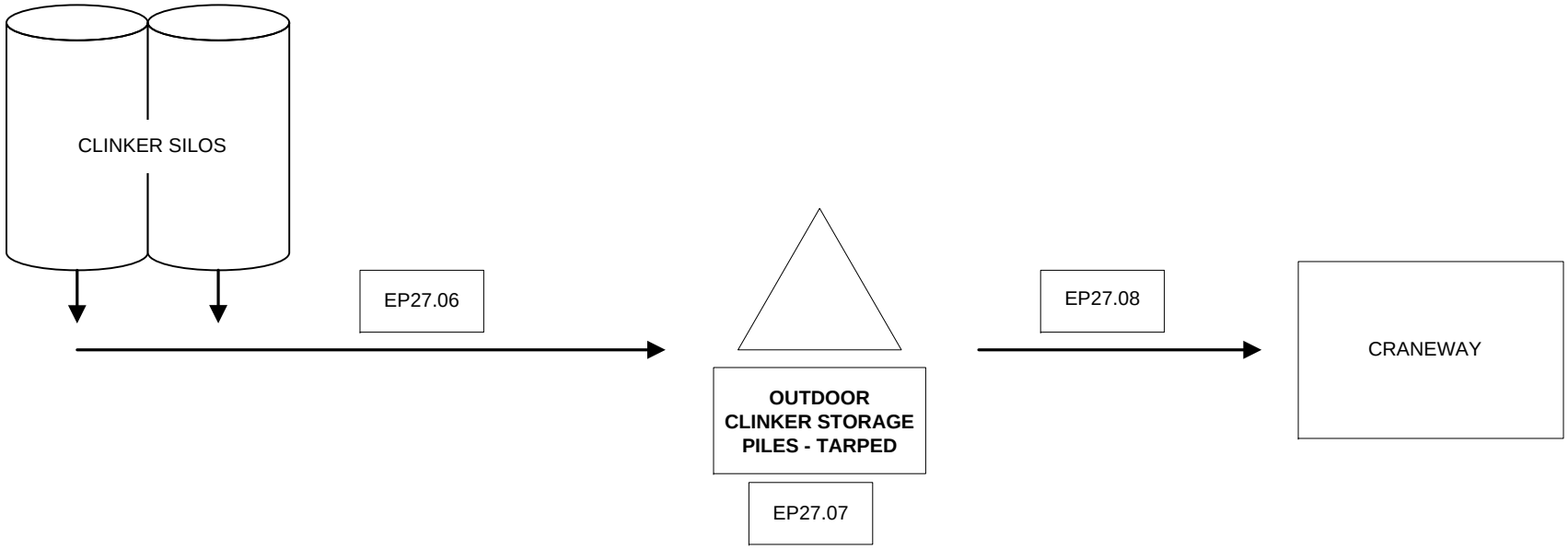

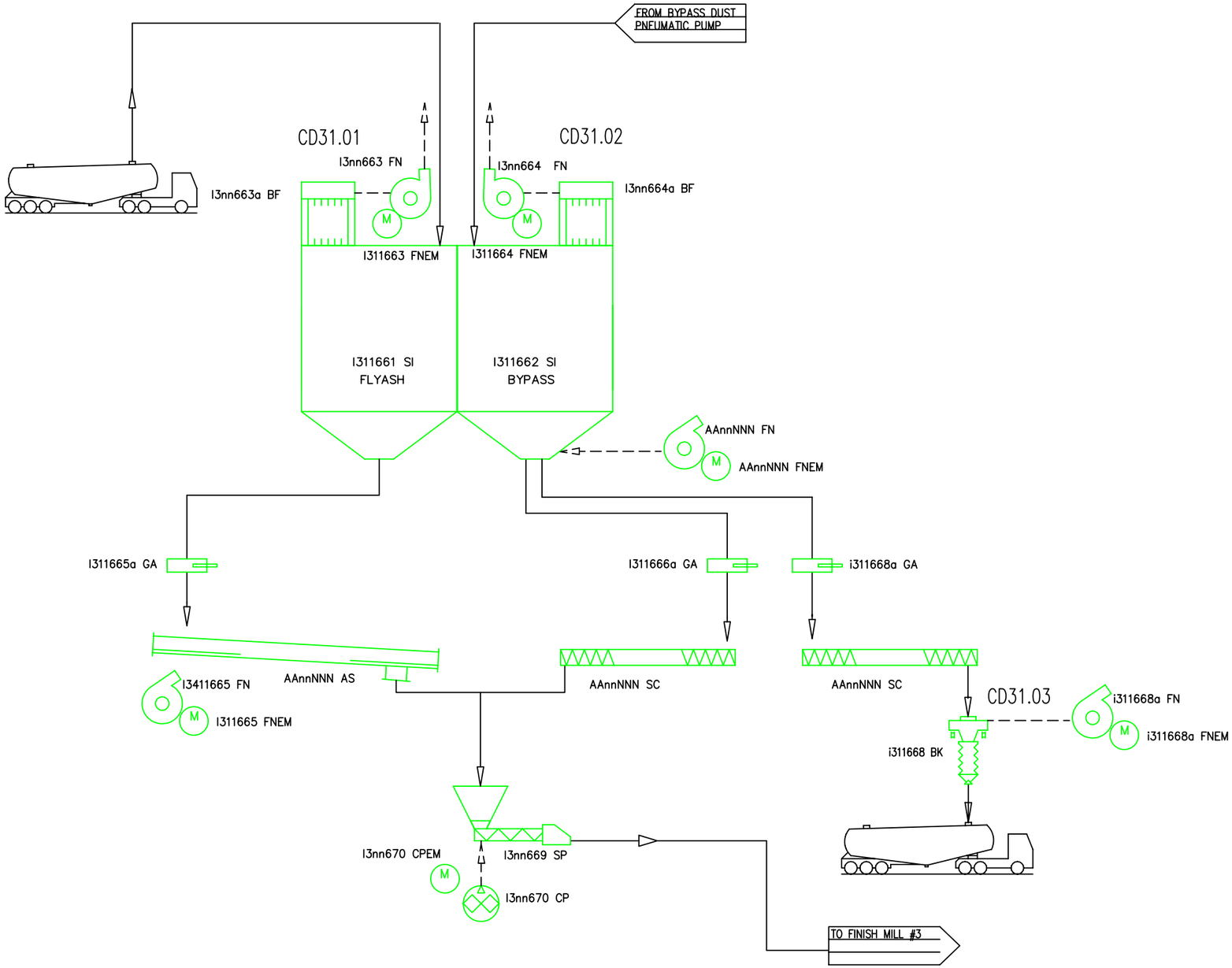

CTG
Italcementi Group
Servizio Impianti Industriali

COMPANY	CAPITOL CEMENT CO.
PLANT	MARTINSBURG
DEPT.	XXX
PROJECT CODE	F603C001
POS.	

5000 TPD NEW LINE
BY-PASS DUST-FLYASH SILOS FOR FINISH MILL#3

DRAWN UP BY	APP'D BY	DATE	DWG N.	REV.
FERRARI A.	ERASMO M.	02.09.2008	MAR-109-045	01

by AUTOCAD A3

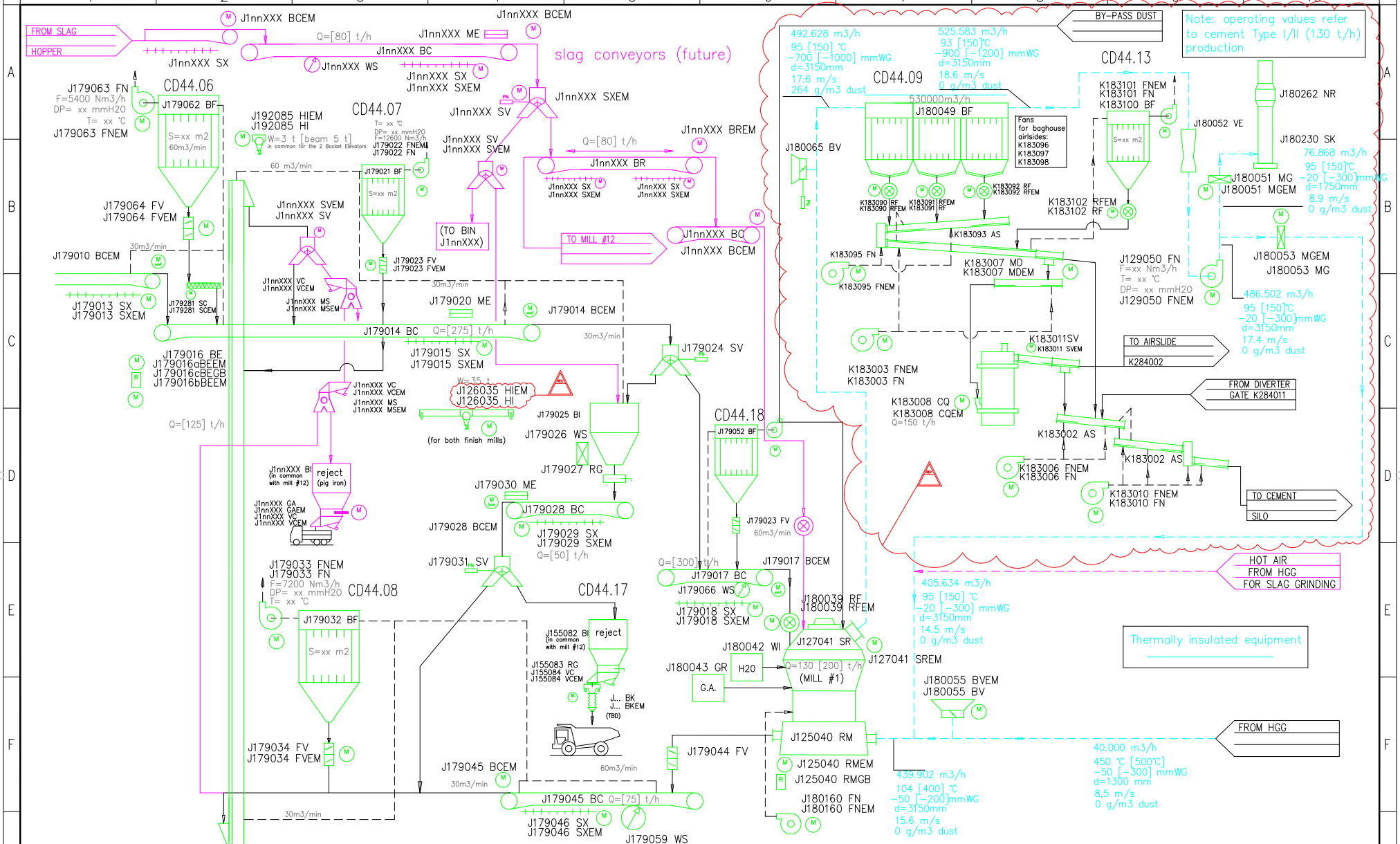

11	Revised where clouded	Ghilardi L.	Ghilardi A.	27 March 09
10	Revised where clouded	ERASMO M	ERASMO M	06 SEP 08
09	Revised where clouded	ERASMO M	ERASMO M	07 GEN 08
08	Revised where clouded	ERASMO M	ERASMO M	21 MAR 07
07	Revised where clouded	ERASMO M	ERASMO M	07 FEB 07
06	GENERAL REVISION	ERASMO M	ERASMO M	30 SEP 06

CTG
Italcementi Group
Servizio Impianti Industriali

COMPANY CAPITOL CEMENT CO.
PLANT MARTINSBURG
DEPT. 110
PROJECT CODE F603C001 POS.

NEW PRODUCTION LINE
FINISH MILL #1 – FLOW SHEET

DRAWN UP BY	APP'D BY	DATE	DWG N.	REV.
Ermidoro	Ambrosini	21.06.2004	MAR-110-00212	

by AUTOCAD A3

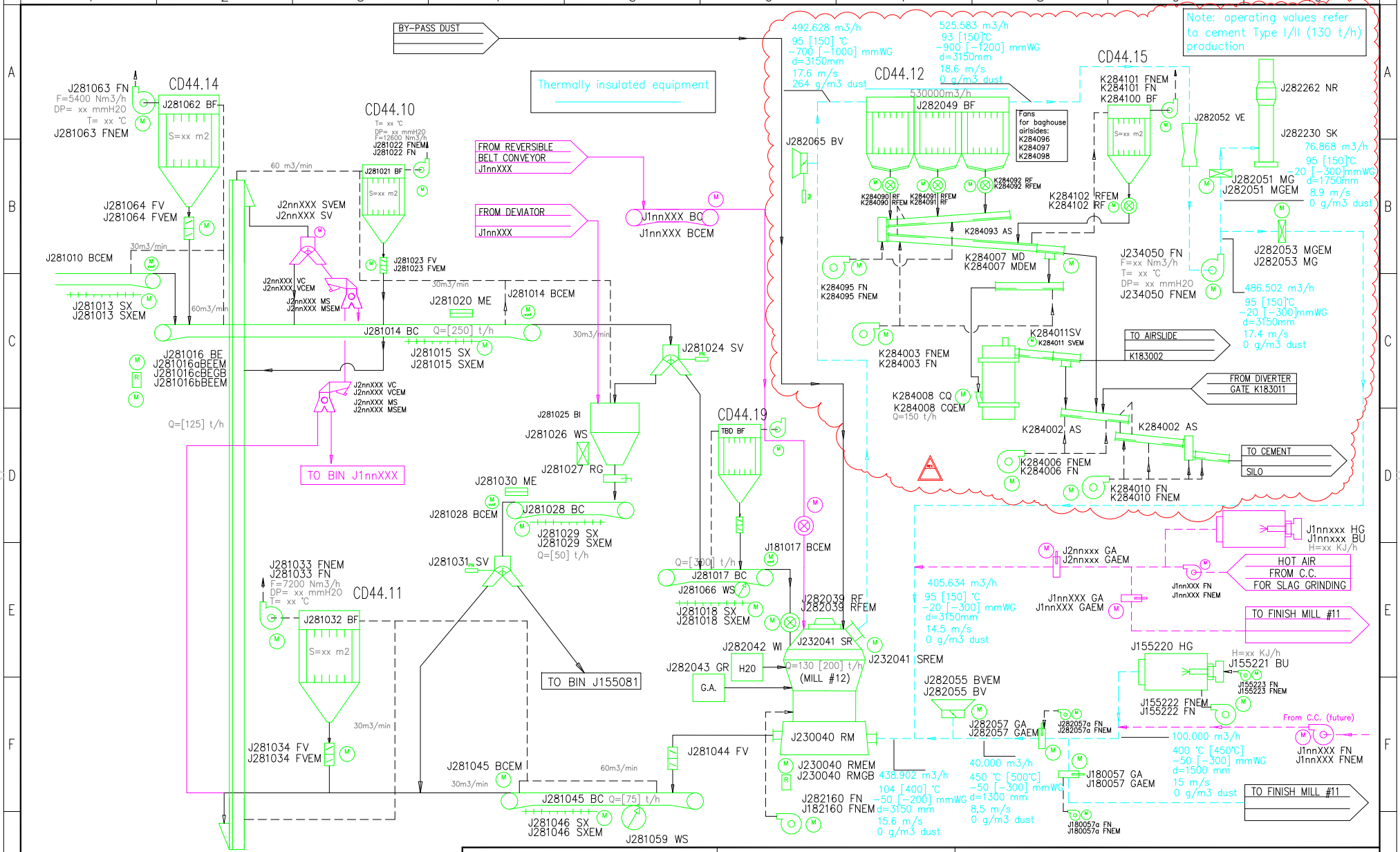

10	Revised where clouded	Ghilardi L.	Ghilardi A.	27 March 09
09	Revised where clouded	ERASMO M	ERASMO M	06 SEP 08
08	Revised where clouded	ERASMO M	ERASMO M	11 LUG 07
07	Revised where clouded	ERASMO M	ERASMO M	07 FEB 07
06	GENERAL REVISION	ERASMO M	ERASMO M	30 SEP 06

CTG
Italcementi Group
Servizio Impianti Industriali

COMPANY CAPITOL CEMENT CO.
PLANT MARTINSBURG
DEPT. 110
PROJECT CODE F603C001 POS.

NEW PRODUCTION LINE
FINISH MILL #2 – FLOW SHEET

DRAWN UP BY	APP'D BY	DATE	DWG N.	REV.
Ermidoro	Ambrosini	21.06.2004	MAR-110-003	11

by AUTOCAD A3

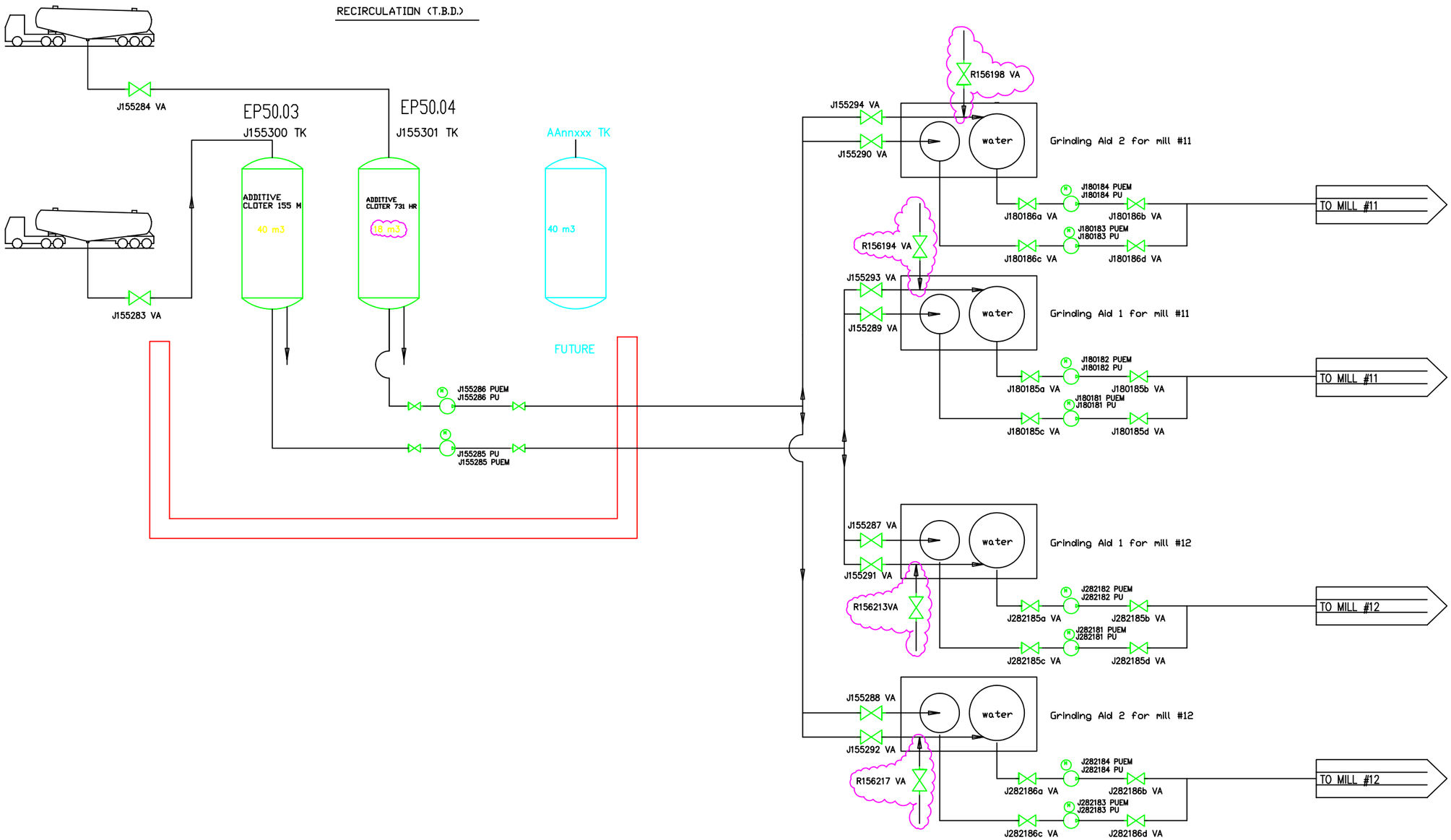

02	Revised Where Clouded	Ghilardi L.	Ghilardi A.	31 MAR 09
00	First Emission	VENTURELLI L.	ERASMO M	31 LUG 07

CTG
Italcementi Group
Servizio Impianti Industriali

COMPANY CAPITOL CEMENT CO.
PLANT MARTINSBURG
DEPT. 110
PROJECT CODE 2002635 POS.

5000 TPD NEW LINE
GRINDING AIDS CIRCUIT

DRAWN UP BY	APP'D BY	DATE	DWG N.	REV.
VENTUR. L.	ERASMO M.	05.03.2009	MAR-110-023	02

by AUTOCAD A3

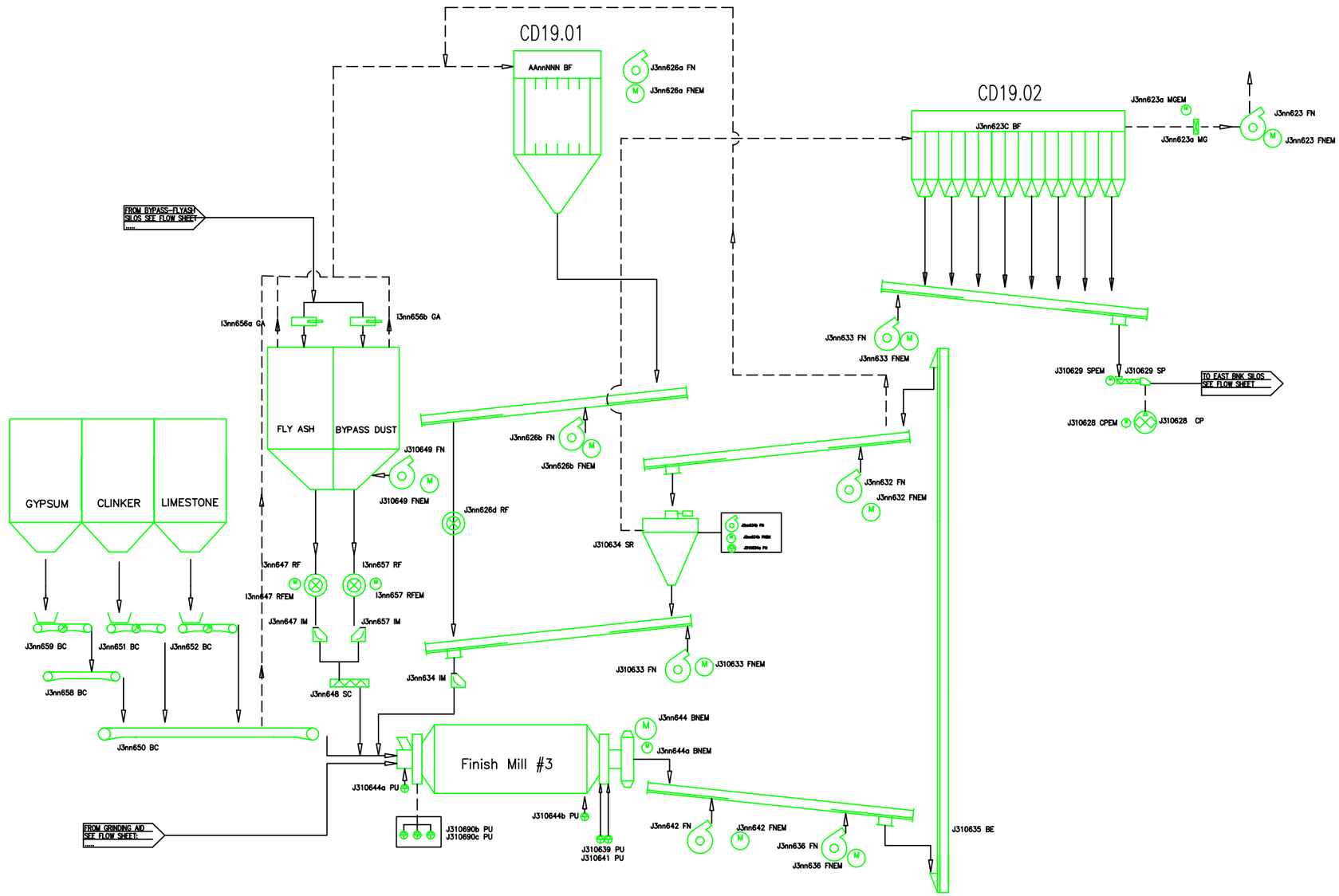

COMPANY	CAPITOL CEMENT CO.
PLANT	MARTINSBURG
DEPT.	XXX
PROJECT CODE	F603C001
POS.	

REVAMPING EXISTING MILL#3
FINISH MILL#3 FLOW SHEET

DRAWN UP BY	APP'D BY	DATE	DWG N.	REV.
FERRARI A.	ERASMO M.	02.09.2008	MAR-110-038	00

by AUTOCAD A3

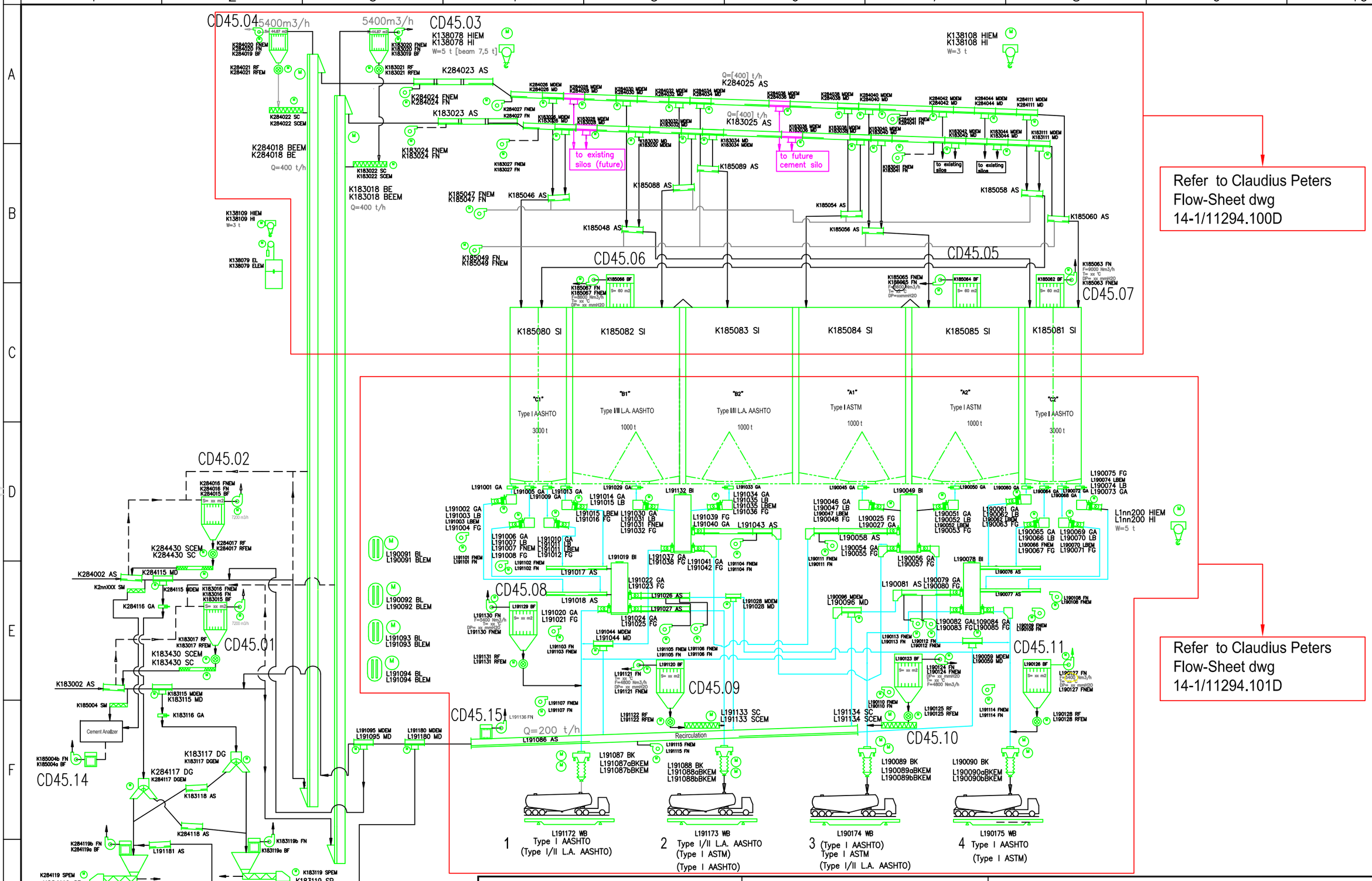

Refer to Claudius Peters Flow-Sheet dwg 14-1/11294.100D

Refer to Claudius Peters Flow-Sheet dwg 14-1/11294.101D

12	General Revision	Viscardi	Viscardi	02.12.2010
11	Revised where clouded	L.Venturelli	L.Venturelli	01.06.2009
10	Revised where clouded	L.Ghilardi	A.Ghilardi	31.03.2009
09	Revised where clouded	ERASMO M.	ERASMO M.	06.09.2008
08	Revised where clouded	ERASMO M.	ERASMO M.	07.01.2008

CTG
Italcementi Group
Servizio Impianti Industriali

COMPANY CAPITOL CEMENT CO.
PLANT MARTINSBURG
DEPT. 111
PROJECT CODE F603C001 POS.

NEW PRODUCTION LINE
CEMENT SILO AND BULK SYSTEM – FLOW SHEET

DRAWN UP BY	APP'D BY	DATE	DWG N.	REV.
ERASMO M	ERASMO M	29.09.2006	MAR–111–002	12

by AUTOCAD A3

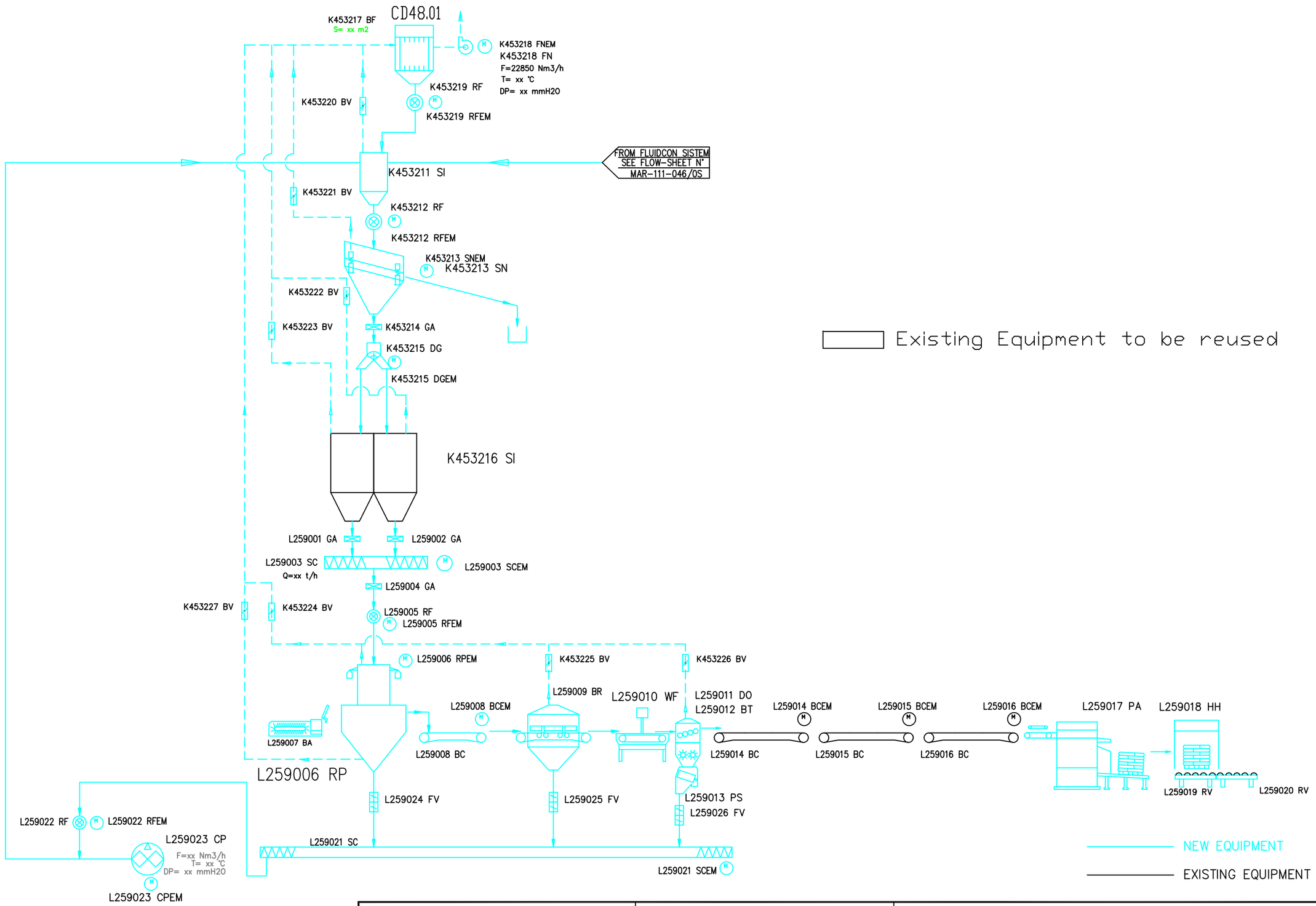

0S	First Emission	VENTURELLI L.	ERASMO M	31 LUG 07

CTG
Italcementi Group
Servizio Impianti Industriali

COMPANY	CAPITOL CEMENT CO.
PLANT	MARTINSBURG
DEPT.	112
PROJECT CODE	POS.

5000 TPD NEW LINE
NEW PACKING PLANT

DRAWN UP BY	APP'D BY	DATE	DWG N.	REV.
FACOETTI	CONTI	08.05.2008	MAR-112-022	00

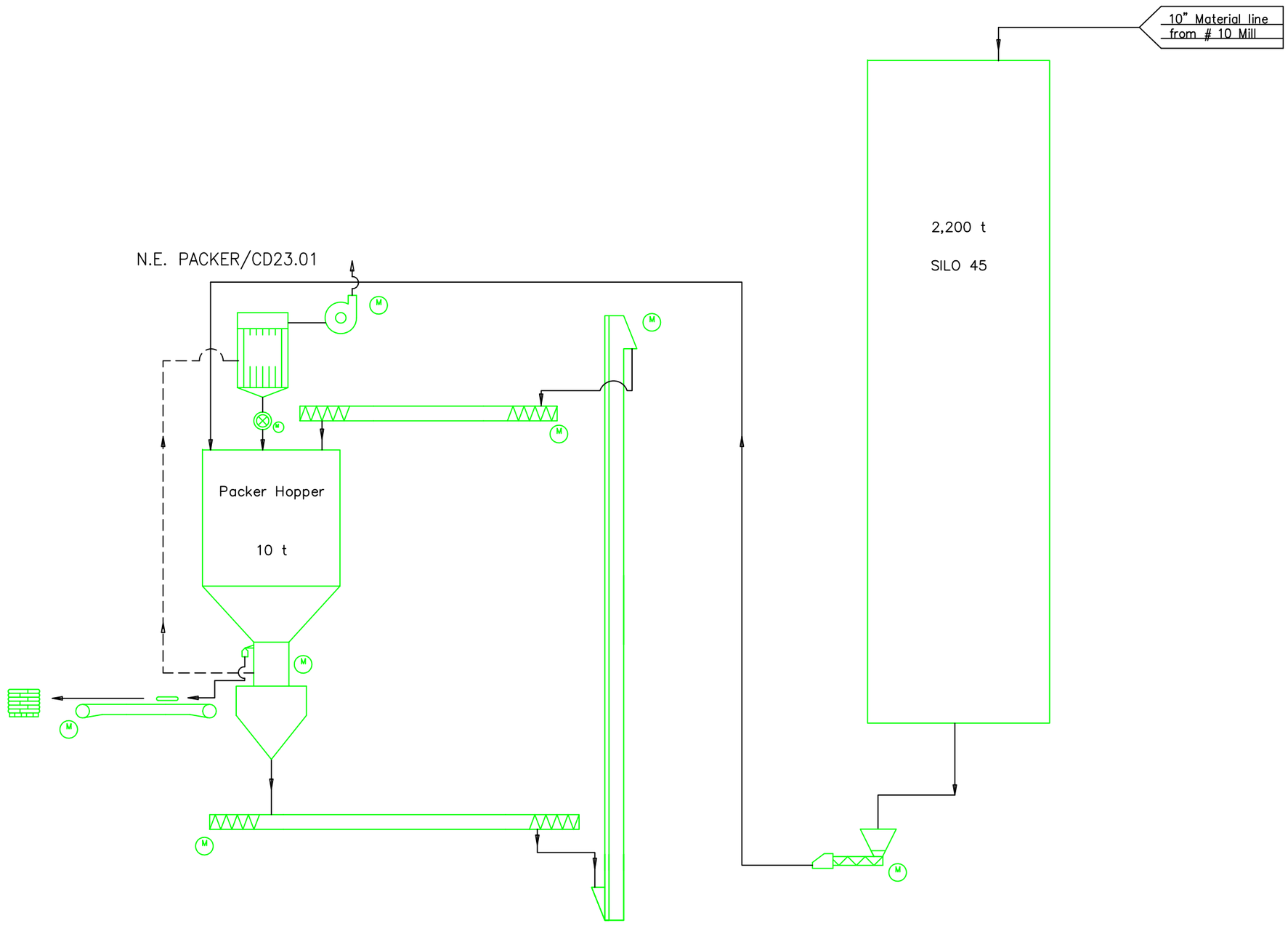

CTG
Italcementi Group
Servizio Impianti Industriali

COMPANY	CAPITOL CEMENT CO.
PLANT	MARTINSBURG
DEPT.	Existing Plant
PROJECT CODE	POS.

EXISTING PRODUCTION LINE
North East Packer Dust Collection – FLOW SHEET

DRAWN UP BY	APP'D BY	DATE	DWG N.	REV.
Ciampa		14.02.2011		00

Diagram C-6
Rail Transloader Flow Diagram

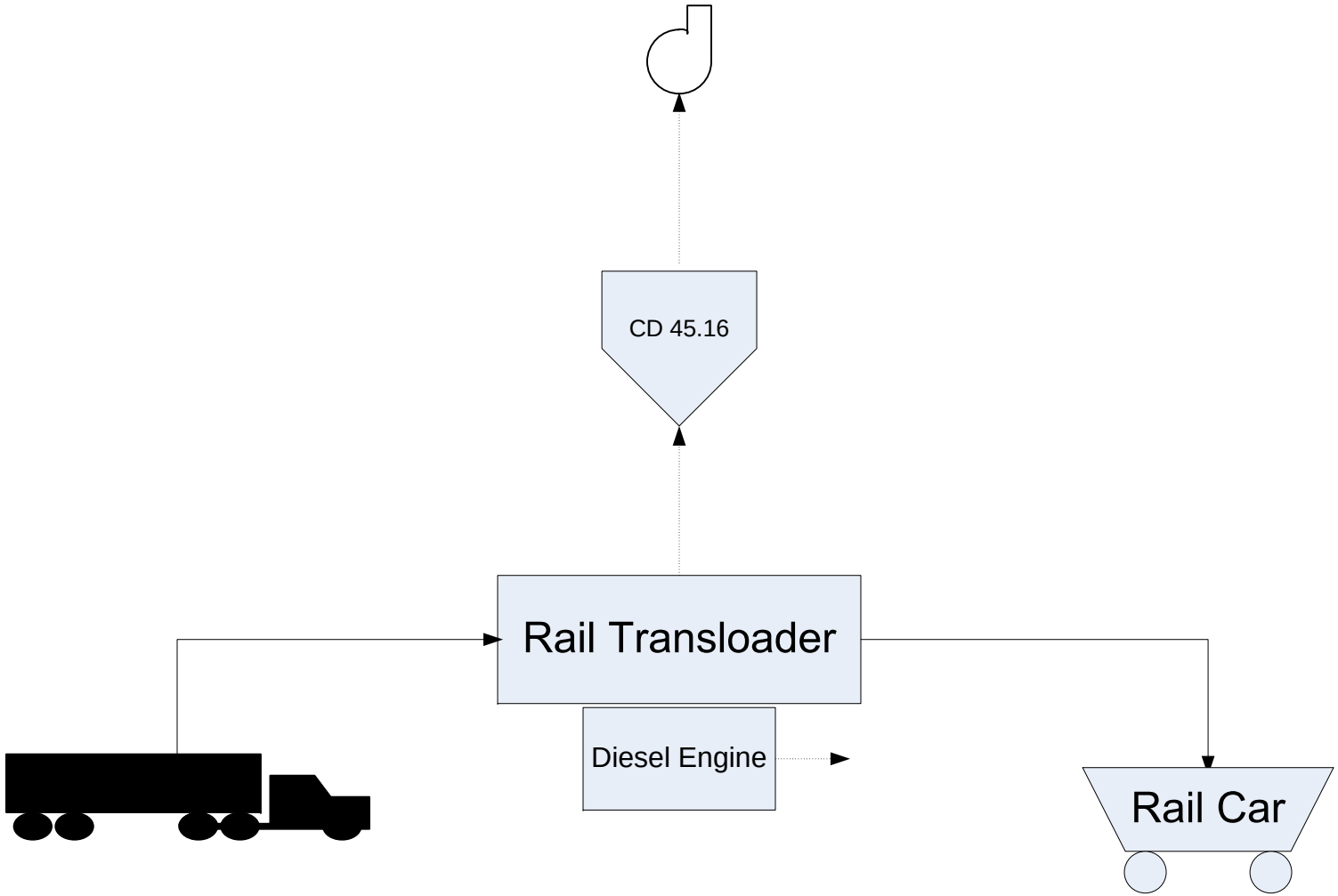

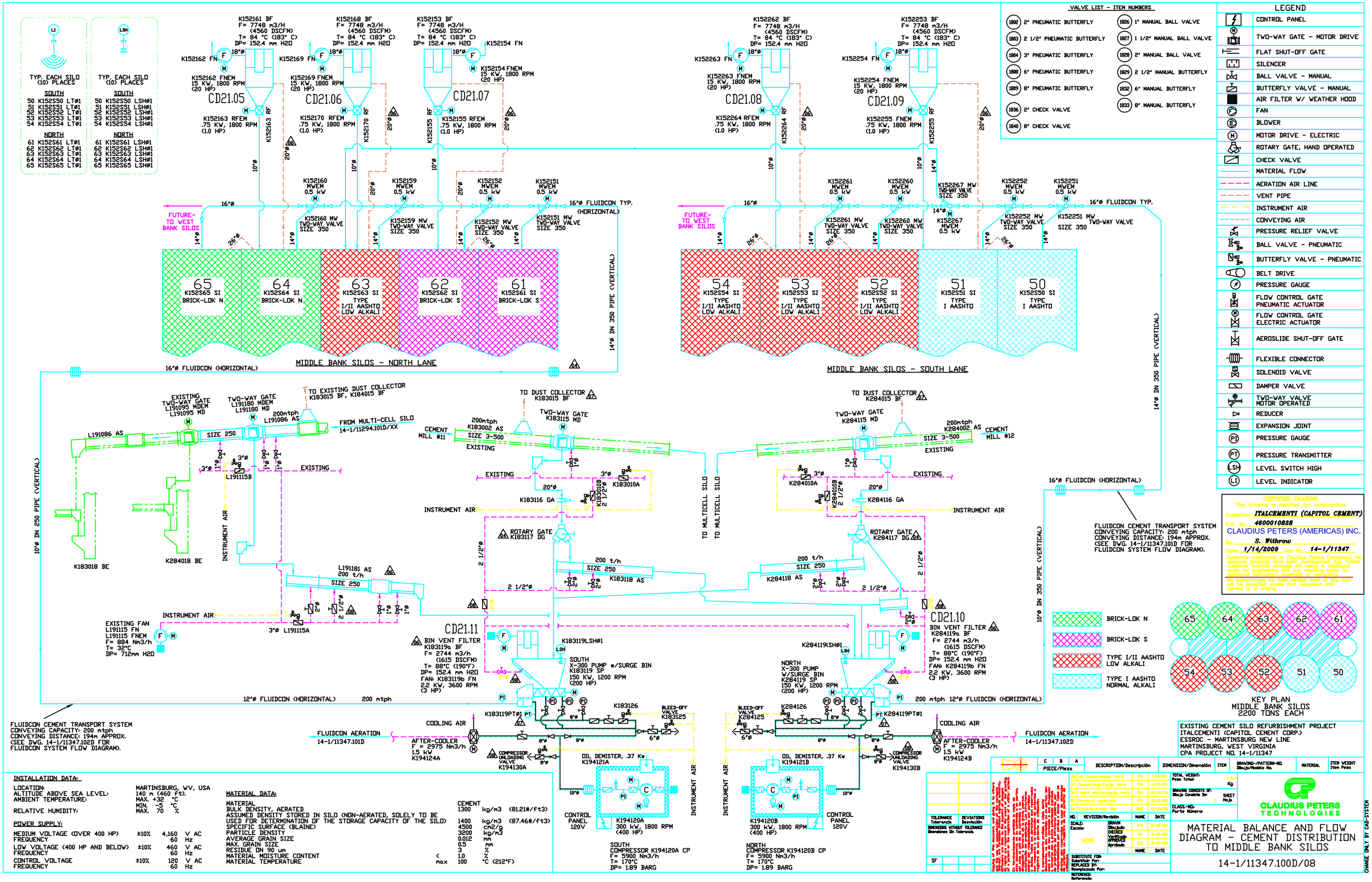
TYP. EACH SILO (10) PLACES
SOUTH
50 K152S50 LT01
51 K152S51 LT01
52 K152S52 LT01
53 K152S53 LT01
54 K152S54 LT01
NORTH
61 K152S61 LT01
62 K152S62 LT01
63 K152S63 LT01
64 K152S64 LT01
65 K152S65 LT01
TYP. EACH SILO (10) PLACES
SOUTH
50 K152S50 LSH01
51 K152S51 LSH01
52 K152S52 LSH01
53 K152S53 LSH01
54 K152S54 LSH01
NORTH
61 K152S61 LSH01
62 K152S62 LSH01
63 K152S63 LSH01
64 K152S64 LSH01
65 K152S65 LSH01
K152161 BF
F= 7748 m3/H (4560 DSCFM)
T= 84 °C (183° C)
DP= 152.4 mm H20
K152162 FN
K152162 FNEM
15 KW, 1800 RPM (20 HP)
CD21.05
K152163 RFEM
.75 KW, 1800 RPM (1.0 HP)
K152168 BF
K152169 FN
K152169 FNEM
CD21.06
K152170 RFEM
K152153 BF
K152154 FN
K152154 FNEM
CD21.07
K152155 RFEM
K152262 BF
K152263 FN
K152263 FNEM
CD21.08
K152264 RFEM
K152253 BF
K152254 FN
K152254 FNEM
CD21.09
K152255 FNEM
K152160 MWEM 0.5 kW
K152159 MWEM 0.5 kW
K152152 MWEM 0.5 kW
K152151 MWEM 0.5 kW
K152160 MW TWO-WAY VALVE SIZE 350
K152159 MW TWO-WAY VALVE SIZE 350
K152152 MW TWO-WAY VALVE SIZE 350
K152151 MW TWO-WAY VALVE SIZE 350
K152261 MWEM 0.5 kW
K152260 MWEM 0.5 kW
K152267 MW TWO-WAY VALVE SIZE 350
K152252 MWEM 0.5 kW
K152251 MWEM 0.5 kW
K152261 MW TWO-WAY VALVE SIZE 350
K152260 MW TWO-WAY VALVE SIZE 350
K152267 MWEM 0.5 kW
K152252 MW TWO-WAY VALVE SIZE 350
K152251 MW TWO-WAY VALVE SIZE 350
16"ø FLUIDCON TYP. (HORIZONTAL)
FUTURE- TO WEST BANK SILOS
65 K152S65 SI BRICK-LOK N
64 K152S64 SI BRICK-LOK N
63 K152S63 SI TYPE I/II AASHTO LOW ALKALI
62 K152S62 SI BRICK-LOK S
61 K152S61 SI BRICK-LOK S
54 K152S54 SI TYPE I/II AASHTO LOW ALKALI
53 K152S53 SI TYPE I/II AASHTO LOW ALKALI
52 K152S52 SI TYPE I/II AASHTO LOW ALKALI
51 K152S51 SI TYPE I AASHTO
50 K152S50 SI TYPE I AASHTO
MIDDLE BANK SILOS - NORTH LANE
MIDDLE BANK SILOS - SOUTH LANE
14"ø DN 350 PIPE (VERTICAL)
16"ø FLUIDCON (HORIZONTAL)
EXISTING TWO-WAY GATE L191095 MDEM L191095 MD
TWO-WAY GATE L191180 MDEM L191180 MD
200mtph L191086 AS
TO EXISTING DUST COLLECTOR K183015 BF, K184015 BF
FROM MULTI-CELL SILO 14-1/11294.101D/XX
L191086 AS
SIZE 250
L191115B
EXISTING
INSTRUMENT AIR
10"ø DN 250 PIPE (VERTICAL)
K183018 BE
K284018 BE
CEMENT MILL #11
200mtph K183002 AS
SIZE 3-500
TO DUST COLLECTOR K183015 BF
TWO-WAY GATE K183115 MD
K183010A
K183116 GA
K183210B 2 1/2"ø
ROTARY GATE K183117 DG
TO MULTICELL SILO
TO DUST COLLECTOR K284015 BF
TWO-WAY GATE K284115 MD
200mtph K284002 AS
CEMENT MILL #12
K284010A
K284010B 2 1/2"ø
K284116 GA
ROTARY GATE K284117 DG
L191181 AS 200 t/h SIZE 250
K183118 AS
K284118 AS
200 t/h
2 1/2"ø
L191115A
EXISTING FAN L191115 FN L191115 FNEM F= 884 Nm3/h T= 32°C DP= 712mm H20
CD21.11
BIN VENT FILTER K183119a BF F= 2744 m3/h (1615 DSCFM) T= 88°C (190°F) DP= 152.4 mm H20 FAN: K183119b FN 2.2 KW, 3600 RPM (3 HP)
K183119LSH01
SOUTH X-300 PUMP w/SURGE BIN K183119 SP 150 KW, 1200 RPM (200 HP)
CD21.10
BIN VENT FILTER K284119a BF F= 2744 m3/h (1615 DSCFM) T= 88°C (190°F) DP= 152.4 mm H20 FAN: K284119b FN 2.2 KW, 3600 RPM (3 HP)
K284119LSH01
NORTH X-300 PUMP W/SURGE BIN K284119 SP 150 KW, 1200 RPM (200 HP)
12"ø FLUIDCON (HORIZONTAL) 200 mtph
200 mtph 12"ø FLUIDCON (HORIZONTAL)
FLUIDCON CEMENT TRANSPORT SYSTEM CONVEYING CAPACITY: 200 mtph CONVEYING DISTANCE: 194m APPROX. (SEE DWG. 14-1/11347.102D FOR FLUIDCON SYSTEM FLOW DIAGRAM).
K183119PT01
K183126
BLEED-OFF VALVE K183125
K284125
K284126
K284119PT01
COOLING AIR
FLUIDCON AERATION 14-1/11347.101D
FLUIDCON AERATION 14-1/11347.102D
AFTER-COOLER F = 2975 Nm3/h 1.5 kW K194124A
AFTER-COOLER F = 2975 Nm3/h 1.5 kW K194124B
COMPRESSOR UNLOADING VALVE K194130A
COMPRESSOR UNLOADING VALVE K194130B
OIL DEMISTER, .37 Kw K194121A
OIL DEMISTER, .37 Kw K194121B
CONTROL PANEL 120V
K194120A 300 kW, 1800 RPM (400 HP)
K194120B 300 kW, 1800 RPM (400 HP)
SOUTH COMPRESSOR K194120A CP F= 5900 Nm3/h T= 170°C DP= 1.89 BARG
NORTH COMPRESSOR K194120B CP F= 5900 Nm3/h T= 170°C DP= 1.89 BARG
FLUIDCON CEMENT TRANSPORT SYSTEM CONVEYING CAPACITY: 200 mtph CONVEYING DISTANCE: 194m APPROX. (SEE DWG. 14-1/11347.101D FOR FLUIDCON SYSTEM FLOW DIAGRAM).
VALVE LIST - ITEM NUMBERS
1802 2" PNEUMATIC BUTTERFLY
1803 2 1/2" PNEUMATIC BUTTERFLY
1804 3" PNEUMATIC BUTTERFLY
1808 6" PNEUMATIC BUTTERFLY
1809 8" PNEUMATIC BUTTERFLY
1836 2" CHECK VALVE
1840 8" CHECK VALVE
1826 1" MANUAL BALL VALVE
1827 1 1/2" MANUAL BALL VALVE
1828 2" MANUAL BALL VALVE
1829 2 1/2" MANUAL BUTTERFLY
1832 6" MANUAL BUTTERFLY
1833 8" MANUAL BUTTERFLY
LEGEND
CONTROL PANEL
TWO-WAY GATE - MOTOR DRIVE
FLAT SHUT-OFF GATE
SILENCER
BALL VALVE - MANUAL
BUTTERFLY VALVE - MANUAL
AIR FILTER W/ WEATHER HOOD
FAN
BLOWER
MOTOR DRIVE - ELECTRIC
ROTARY GATE, HAND OPERATED
CHECK VALVE
MATERIAL FLOW
AERATION AIR LINE
VENT PIPE
INSTRUMENT AIR
CONVEYING AIR
PRESSURE RELIEF VALVE
BALL VALVE - PNEUMATIC
BUTTERFLY VALVE - PNEUMATIC
BELT DRIVE
PRESSURE GAUGE
FLOW CONTROL GATE PNEUMATIC ACTUATOR
FLOW CONTROL GATE ELECTRIC ACTUATOR
AEROSLIDE SHUT-OFF GATE
FLEXIBLE CONNECTOR
SOLENOID VALVE
DAMPER VALVE
TWO-WAY VALVE MOTOR OPERATED
REDUCER
EXPANSION JOINT
PRESSURE GAUGE
PRESSURE TRANSMITTER
LEVEL SWITCH HIGH
LEVEL INDICATOR
CERTIFIED DRAWING
This drawing is certified for construction.
Customer: ITALCEMENTI (CAPITOL CEMENT)
P.O. No.: 4600010828
CLAUDIUS PETERS (AMERICAS) INC.
By: S. Withrow
Date: 1/14/2009 Job No.: 14-1/11347
Customer, confirm to Claudius Peters (America) Inc. approval drawings have been incorporated. Any further customer initiated changes will result in additional costs for engineering and any resulting costs for additional fabrication, assembly or retrofitting.
No deviations for field rejoins work of any type will be accepted unless first requested and agreed to in writing.
BRICK-LOK N
BRICK-LOK S
TYPE I/II AASHTO LOW ALKALI
TYPE I AASHTO NORMAL ALKALI
65 64 63 62 61
54 53 52 51 50
KEY PLAN
MIDDLE BANK SILOS
2200 TONS EACH
EXISTING CEMENT SILO REFURBISHMENT PROJECT
ITALCEMENTI (CAPITOL CEMENT CORP.)
ESSROC - MARTINSBURG NEW LINE
MARTINSBURG, WEST VIRGINIA
CPA PROJECT NO. 14-1/11347
INSTALLATION DATA:
LOCATION: MARTINSBURG, WV, USA
ALTITUDE ABOVE SEA LEVEL: 140 m (460 ft)
AMBIENT TEMPERATURE: MAX. +32 °C
MIN. -5 °C
RELATIVE HUMIDITY: MAX. 70 %
POWER SUPPLY:
MEDIUM VOLTAGE (OVER 400 HP) ±10% 4,160 V AC
FREQUENCY 60 Hz
LOW VOLTAGE (400 HP AND BELOW) ±10% 460 V AC
FREQUENCY 60 Hz
CONTROL VOLTAGE ±10% 120 V AC
FREQUENCY 60 Hz
MATERIAL DATA:
MATERIAL CEMENT
BULK DENSITY, AERATED 1300 kg/m3 (81.21#/ft3)
ASSUMED DENSITY STORED IN SILO (NON-AERATED, SOLELY TO BE USED FOR DETERMINATION OF THE STORAGE CAPACITY OF THE SILO) 1400 kg/m3 (87.46#/ft3)
SPECIFIC SURFACE (BLAINE) 4500 cm2/g
PARTICLE DENSITY 3200 kg/m3
AVERAGE GRAIN SIZE 0.012 mm
MAX. GRAIN SIZE 0.5 mm
RESIDUE ON 90 um 3 %
MATERIAL MOISTURE CONTENT < 1.0 %
MATERIAL TEMPERATURE max 100 °C (212°F)
C B A
PIECE/Pieza
DESCRIPTION/Descripción
DIMENSION/Dimensión
ITEM
DRAWING-/PATTERN-NO. Dibujo/Modelo No.
MATERIAL
ITEM WEIGHT Item Peso
08 As-built/equip. no's FH 1/9/09
07 Dedusting/Equip. No's FH 1/19/09
06 Vent ducts,equip. no's CH 12/10/08
05 General updates FH 12/2/08
04 Construction Iss BMS 11/10/08
TOTAL WEIGHT: Peso Total Lbs Kg
DRAWING CONSISTS OF: Dibujo Consiste De 1 SHEET Hoja
CLASS-NO: Parte Número
TOLERANCE Tolerancia
DEVIATIONS Desviación
DIMENSIONS WITHOUT TOLERANCE Dimensiones Sin Tolerancia
SF
NO. REVISION/Revisión NAME DATE
SCALE: Escala: NONE
DRAWN Dibujado FH 8-18-08
CHECKED Revisado RH 9-18-08
VERIFIED Verificado FH 9-18-08
APPROVED Aprobado EW 9-19-08
NAME DATE
SUBSTITUTE FOR Substituir Por
REPLACES BY Reemplazado Por
REFERENCE Referencia
CLAUDIUS PETERS TECHNOLOGIES
MATERIAL BALANCE AND FLOW DIAGRAM - CEMENT DISTRIBUTION TO MIDDLE BANK SILOS
14-1/11347.100D/08
CHANGE ONLY BY CAD-SYSTEM

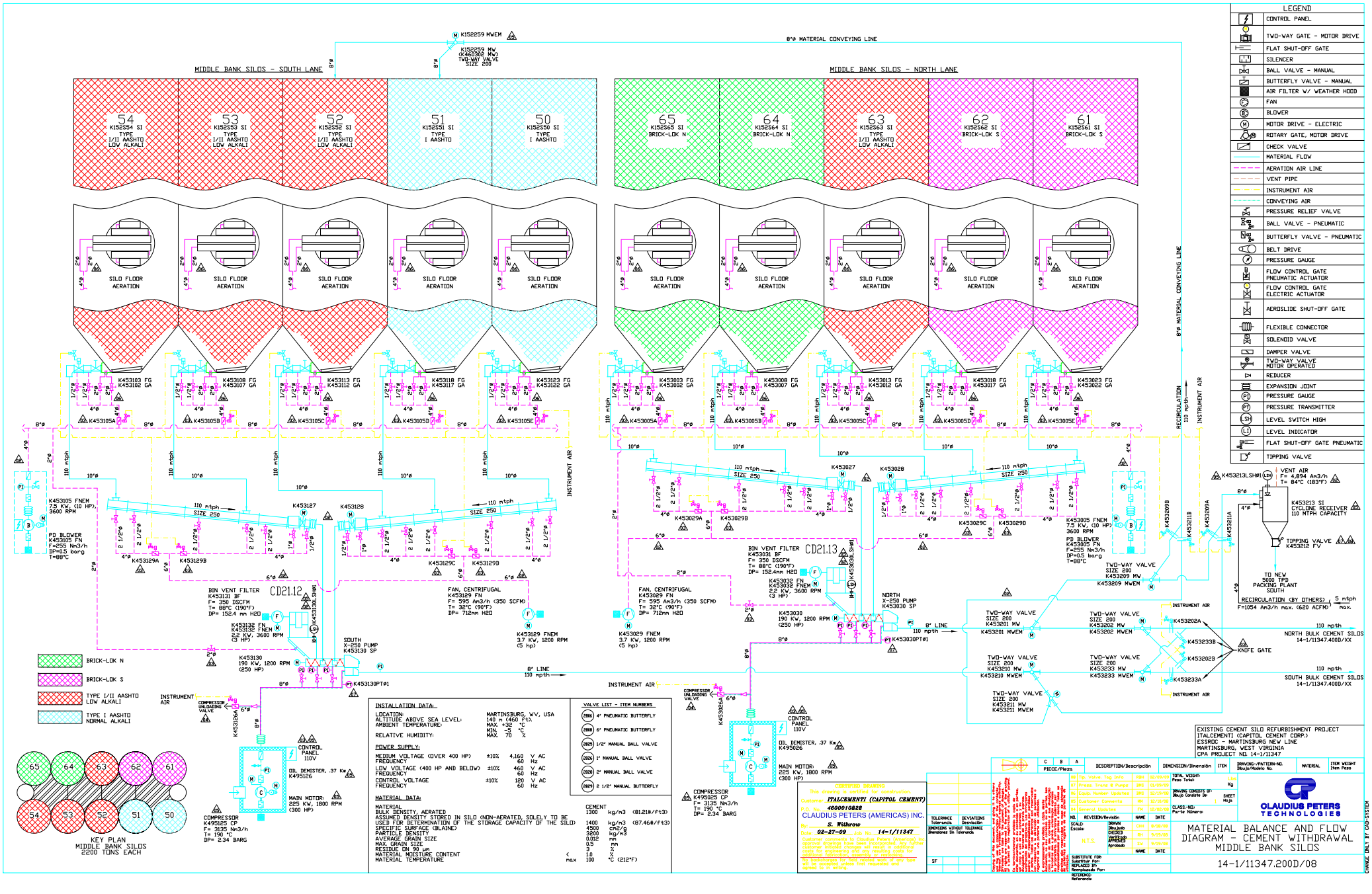
MIDDLE BANK SILOS - SOUTH LANE
MIDDLE BANK SILOS - NORTH LANE
8"ø MATERIAL CONVEYING LINE
K152259 MWEM
K152259 MV (K460302 MV2) TWO-WAY VALVE SIZE 200
54 K152554 SI TYPE I/II AASHTO LOW ALKALI
53 K152553 SI TYPE I/II AASHTO LOW ALKALI
52 K152552 SI TYPE I/II AASHTO LOW ALKALI
51 K152551 SI TYPE I AASHTO
50 K152550 SI TYPE I AASHTO
65 K152565 SI BRICK-LOK N
64 K152564 SI BRICK-LOK N
63 K152563 SI TYPE I/II AASHTO LOW ALKALI
62 K152562 SI BRICK-LOK S
61 K152561 SI BRICK-LOK S
SILO FLOOR AERATION
K453103 FG K453102 GA
K453108 FG K453107 GA
K453113 FG K453112 GA
K453118 FG K453117 GA
K453123 FG K453122 GA
K453003 FG K453002 GA
K453008 FG K453007 GA
K453013 FG K453012 GA
K453018 FG K453017 GA
K453023 FG K453022 GA
K453105A
K453105B
K453105C
K453105D
K453105E
K453005A
K453005B
K453005C
K453005D
K453005E
110 mtph
SIZE 250
K453127
K453128
K453027
K453028
K453129A
K453129B
K453129C
K453129D
K453029A
K453029B
K453029C
K453029D
K453105 FNEM 7.5 KW, (10 HP), 3600 RPM
PD BLOWER K453105 FN F=255 Nm3/h DP=0.5 barg T=88°C
K453005 FNEM 7.5 KW, (10 HP) 3600 RPM
PD BLOWER K453005 FN F=255 Nm3/h DP=0.5 barg T=88°C
INSTRUMENT AIR
RECIRCULATION 110 mtph
BIN VENT FILTER K453131 BF F= 350 DSCFM T= 88°C (190°F) DP= 152.4 mm H2O
CD21.12
K453130 FN K453132 FNEM 22 KW, 3600 RPM (3 HP)
K453130 190 KW, 1200 RPM (250 HP)
SOUTH X-250 PUMP K453130 SP
K453130PT01
FAN, CENTRIFUGAL K453129 FN F= 595 Am3/h (350 SCFM) T= 32°C (90°F) DP= 712mm H2O
K453129 FNEM 3.7 KW, 1200 RPM (5 hp)
8" LINE 110 mtph
BIN VENT FILTER K453031 BF F= 350 DSCFM T= 88°C (190°F) DP= 152.4mm H2O
CD21.13
K453032 FN K453032 FNEM 22 KW, 3600 RPM (3 HP)
K453030 190 KW, 1200 RPM (250 HP)
NORTH X-250 PUMP K453030 SP
K453030PT01
FAN, CENTRIFUGAL K453029 FN F= 595 Am3/h (350 SCFM) T= 32°C (90°F) DP= 712mm H2O
K453029 FNEM 3.7 KW, 1200 RPM (5 hp)
TWO-WAY VALVE SIZE 200 K453209 MW K453209 MWEM
K453209B
K453211B
K453209A
K453211A
VENT AIR F= 4,894 Am3/h T= 84°C (183°F)
K453213LSH01
K453213 SI CYCLONE RECEIVER 110 MTPH CAPACITY
TIPPING VALVE K453212 FV
TO NEW 5000 TPD PACKING PLANT SOUTH
RECIRCULATION (BY OTHERS) 5 mtph max. F=1054 Am3/h max. (620 ACFM)
TWO-WAY VALVE SIZE 200 K453201 MW K453201 MWEM
TWO-WAY VALVE SIZE 200 K453210 MW K453210 MWEM
TWO-WAY VALVE SIZE 200 K453211 MW K453211 MWEM
TWO-WAY VALVE SIZE 200 K453202 MW K453202 MWEM
TWO-WAY VALVE SIZE 200 K453233 MW K453233 MWEM
K453202A
K453233B
K453202B
K453233A
KNIFE GATE
NORTH BULK CEMENT SILOS 14-1/11347.400D/XX
SOUTH BULK CEMENT SILOS 14-1/11347.400D/XX
BRICK-LOK N
BRICK-LOK S
TYPE I/II AASHTO LOW ALKALI
TYPE I AASHTO NORMAL ALKALI
INSTRUMENT AIR
COMPRESSOR UNLOADING VALVE
K453126A
CONTROL PANEL 110V
OIL DEMISTER, .37 Kw K495126
MAIN MOTOR: 225 KW, 1800 RPM (300 HP)
COMPRESSOR CP K495125 CP F= 3135 Nm3/h T= 190 °C DP= 2.34 BARG
K453026A
K495026
COMPRESSOR CP K495025 CP F= 3135 Nm3/h T= 190 °C DP= 2.34 BARG
KEY PLAN
MIDDLE BANK SILOS
2200 TONS EACH
INSTALLATION DATA:
LOCATION:
ALTITUDE ABOVE SEA LEVEL: MARTINSBURG, WV, USA 140 m (460 ft).
AMBIENT TEMPERATURE: MAX. +32 °C MIN. -5 °C
RELATIVE HUMIDITY: MAX. 70 %
POWER SUPPLY:
MEDIUM VOLTAGE (OVER 400 HP) ±10% 4,160 V AC FREQUENCY 60 Hz
LOW VOLTAGE (400 HP AND BELOW) ±10% 460 V AC FREQUENCY 60 Hz
CONTROL VOLTAGE ±10% 120 V AC FREQUENCY 60 Hz
MATERIAL DATA:
MATERIAL CEMENT
BULK DENSITY, AERATED 1300 kg/m3 (81.21#/ft3)
ASSUMED DENSITY STORED IN SILO (NON-AERATED, SOLELY TO BE USED FOR DETERMINATION OF THE STORAGE CAPACITY OF THE SILO) 1400 kg/m3 (87.46#/ft3)
SPECIFIC SURFACE (BLAINE) 4500 cm2/g
PARTICLE DENSITY 3200 kg/m3
AVERAGE GRAIN SIZE 0.012 mm
MAX. GRAIN SIZE 0.5 mm
RESIDUE ON 90 µm 3 %
MATERIAL MOISTURE CONTENT < 1.0 %
MATERIAL TEMPERATURE max 100 °C (212°F)
VALVE LIST - ITEM NUMBERS
2806 4" PNEUMATIC BUTTERFLY
2808 6" PNEUMATIC BUTTERFLY
2825 1/2" MANUAL BALL VALVE
2826 1" MANUAL BALL VALVE
2828 2" MANUAL BALL VALVE
2829 2 1/2" MANUAL BUTTERFLY
CERTIFIED DRAWING
This drawing is certified for construction
Customer: ITALCEMENTI (CAPITOL CEMENT)
P.O. No.: 4600010828
CLAUDIUS PETERS (AMERICAS) INC.
By: S. Führer
Date: 02-27-09 Job No.: 14-1/11347
Customer comments to Claudius Peters (America) Inc approval drawings have been incorporated. Any further customer proposed changes will result in additional costs and delays. Claudius Peters (America) Inc. is not responsible for additional expenses, delays, or liabilities.
All dimensions to be verified prior to fabrication. Any discrepancies found must be reported to CP. Failure to do so will be accepted unless first reported and agreed to in writing.
TOLERANCE Tolerancia
DEVIATIONS Desviación
DIMENSIONS WITHOUT TOLERANCE Dimensiones Sin Tolerancia
SF
LEGEND
CONTROL PANEL
TWO-WAY GATE - MOTOR DRIVE
FLAT SHUT-OFF GATE
SILENCER
BALL VALVE - MANUAL
BUTTERFLY VALVE - MANUAL
AIR FILTER W/ WEATHER HOOD
FAN
BLOWER
MOTOR DRIVE - ELECTRIC
ROTARY GATE, MOTOR DRIVE
CHECK VALVE
MATERIAL FLOW
AERATION AIR LINE
VENT PIPE
INSTRUMENT AIR
CONVEYING AIR
PRESSURE RELIEF VALVE
BALL VALVE - PNEUMATIC
BUTTERFLY VALVE - PNEUMATIC
BELT DRIVE
PRESSURE GAUGE
FLOW CONTROL GATE PNEUMATIC ACTUATOR
FLOW CONTROL GATE ELECTRIC ACTUATOR
AEROSLIDE SHUT-OFF GATE
FLEXIBLE CONNECTOR
SOLENOID VALVE
DAMPER VALVE
TWO-WAY VALVE MOTOR OPERATED
REDUCER
EXPANSION JOINT
PRESSURE GAUGE
PRESSURE TRANSMITTER
LEVEL SWITCH HIGH
LEVEL INDICATOR
FLAT SHUT-OFF GATE PNEUMATIC
TIPPING VALVE
EXISTING CEMENT SILO REFURBISHMENT PROJECT
ITALCEMENTI (CAPITOL CEMENT CORP.)
ESSROC - MARTINSBURG NEW LINE
MARTINSBURG, WEST VIRGINIA
CPA PROJECT NO. 14-1/11347
PIECE/Pieza
DESCRIPTION/Descripción
DIMENSION/Dimensión
ITEM
DRAWING/PATTERN-NO. Dibujo/Modelo No.
MATERIAL
ITEM WEIGHT Item Peso
08 Tip Valve Tag Info BSH 02/05/09
07 Press. Trans & Pumps JMS 01/09/09
06 Equip. Number Updates JMS 12/19/08
05 Customer Comments MH 12/12/08
04 General Updates FW 12/08/08
NO. REVISION/Revisión NAME DATE
TOTAL WEIGHT: Peso Total Kg
DRAWING CONSISTS OF: Dibujo Consiste De
SHEET Hoja 1 OF 1
CLASS-NO: Parte Número
SCALE: Escala: N.T.S.
DRAWN Dibujado CHR 8/18/08
CHECKED Verificado RH 9/19/08
APPROVED Aprobado SW 9/19/08
NAME DATE
SUBSTITUTE FOR Substituir Por
REPLACED BY Remplazado Por
REFERENCE Referencia:
CLAUDIUS PETERS TECHNOLOGIES
MATERIAL BALANCE AND FLOW DIAGRAM - CEMENT WITHDRAWAL MIDDLE BANK SILOS
14-1/11347.200D/08
CHANGE ONLY BY CAD-SYSTEM

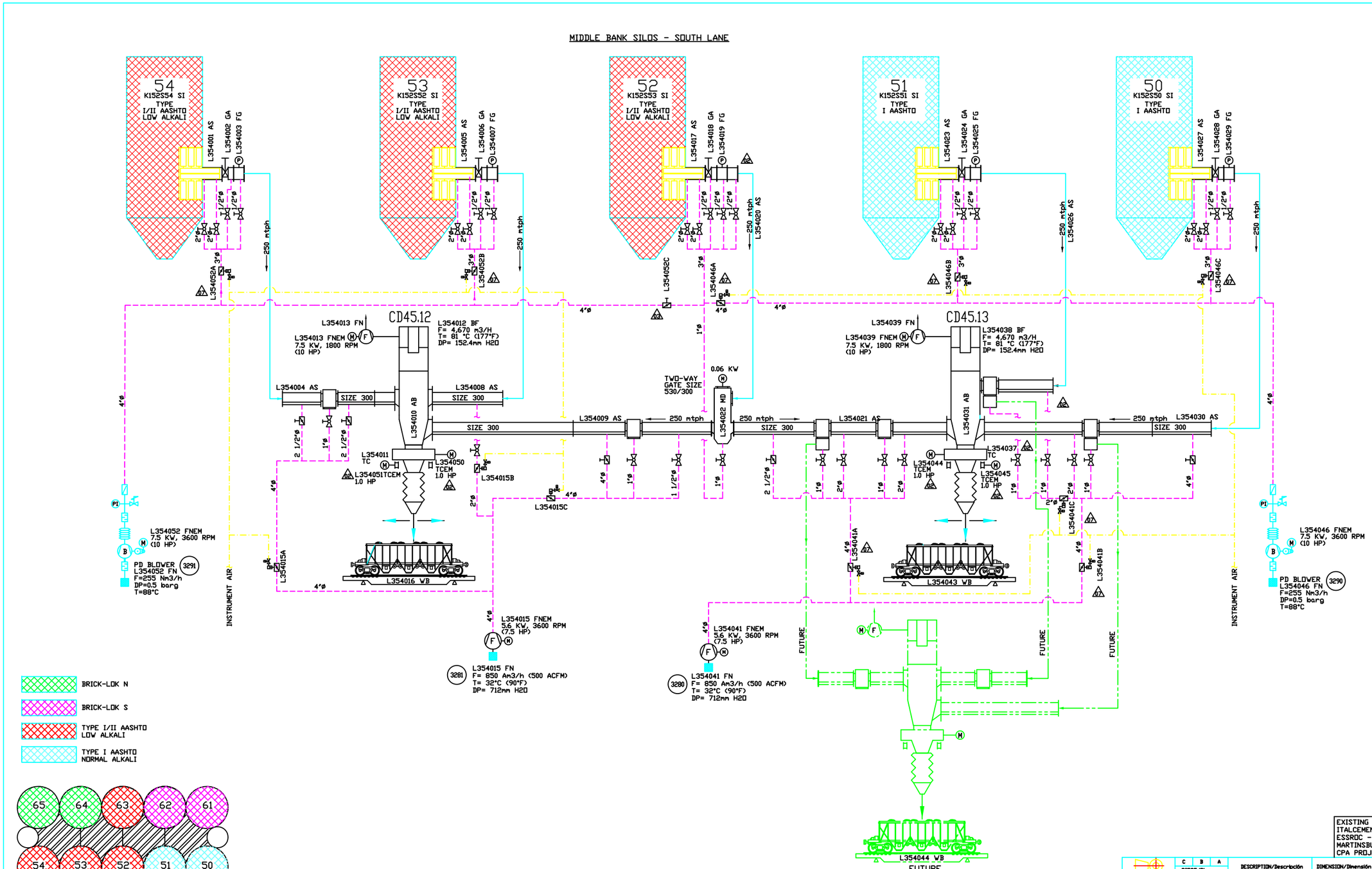

KEY PLAN
MIDDLE BANK SILOS
2200 TONS EACH

LEGEND
CONTROL PANEL
TWO-WAY GATE - MOTOR DRIVE
FLAT SHUT-OFF GATE
SILENCER
BALL VALVE - MANUAL
BUTTERFLY VALVE - MANUAL
AIR FILTER W/ WEATHER HOOD
FAN
BLOWER
MOTOR DRIVE - ELECTRIC
ROTARY GATE, MOTOR DRIVE
CHECK VALVE
MATERIAL FLOW
AERATION AIR LINE
VENT PIPE
INSTRUMENT AIR
CONVEYING AIR
PRESSURE RELIEF VALVE
BALL VALVE - PNEUMATIC
BUTTERFLY VALVE - PNEUMATIC
BELT DRIVE
PRESSURE GAUGE
FLOW CONTROL GATE PNEUMATIC ACTUATOR
FLOW CONTROL GATE ELECTRIC ACTUATOR
AEROSLIDE SHUT-OFF GATE
FLEXIBLE CONNECTOR
SOLENOID VALVE
DUMPER VALVE
TWO-WAY VALVE MOTOR OPERATED
REDUCER
EXPANSION JOINT
PRESSURE GAUGE
PRESSURE TRANSMITTER
LEVEL SWITCH HIGH
LEVEL INDICATOR
DIVERTER
FLOW CONTROL GATES

3802	2" PNEUMATIC BUTTERFLY
3804	3" PNEUMATIC BUTTERFLY
3806	4" PNEUMATIC BUTTERFLY
3825	1/2" MANUAL BALL VALVE
3826	1" MANUAL BALL VALVE
3827	1 1/2" MANUAL BALL VALVE
3828	2" MANUAL BALL VALVE
3829	2 1/2" MANUAL BUTTERFLY
3831	4" MANUAL BUTTERFLY

EXISTING CEMENT SILO REFURBISHMENT PROJECT
ITALCEMENTI (CAPITOL CEMENT CORP.)
ESSROC - MARTINSBURG NEW LINE
MARTINSBURG, WEST VIRGINIA
CPA PROJECT NO. 14-1/11347

INSTALLATION DATA:

LOCATION:	MARTINSBURG, WV, USA		
ALTITUDE ABOVE SEA LEVEL:	140 m (460 ft).		
AMBIENT TEMPERATURE:	MAX. +32 °C		
	MIN. -5 °C		
RELATIVE HUMIDITY:	MAX. 70 %		
POWER SUPPLY:			
MEDIUM VOLTAGE (OVER 400 HP)	±10%	4,160	V AC
FREQUENCY		60	Hz
LOW VOLTAGE (400 HP AND BELOW)	±10%	460	V AC
FREQUENCY		60	Hz
CONTROL VOLTAGE	±10%	120	V AC
FREQUENCY		60	Hz

MATERIAL DATA:

MATERIAL		CEMENT		
BULK DENSITY, AERATED		1300	kg/m3	(81.21#/ft3)
ASSUMED DENSITY STORED IN SILO (NON-AERATED, SOLELY TO BE USED FOR DETERMINATION OF THE STORAGE CAPACITY OF THE SILO)		1400	kg/m3	(87.46#/ft3)
SPECIFIC SURFACE (BLAINE)		4500	cm2/g	
PARTICLE DENSITY		3200	kg/m3	
AVERAGE GRAIN SIZE		0.012	mm	
MAX. GRAIN SIZE		0.5	mm	
RESIDUE ON 90 um		3	%	
MATERIAL MOISTURE CONTENT	<	1.0	%	
MATERIAL TEMPERATURE	max	100	°C (212°F)	

CERTIFIED DRAWING
This drawing is certified for construction.
Customer: ITALCEMENTI (CAPITOL CEMENT)
P.O. No.: 4600010828
CLAUDIUS PETERS (AMERICAS) INC.
By: S. Withrow
Date: 02-27-2009 Job No.: 14-1/11347
Customer comments to Claudius Peters (Americas) Inc approval drawings have been incorporated. Any further customer initiated changes will result in additional costs for engineering and any resulting costs for additional fabrication, assembly or retooling.
No backcharge for field related work of any type will be accepted unless first requested and agreed to in writing.

TOLERANCE Tolerancia | DEVIATIONS Desviación
DIMENSIONS WITHOUT TOLERANCE Dimensiones Sin Tolerancia
SF

NO.	REVISION/Revisión	NAME	DATE
07	Revised pneu valves	FH	1/15/09
06	Item numbers	FH	1/7/09
05	General revisions	FH	12/10/08
04	Customer comments	FH	12/2/08
03	Construction bid	FH	11/24/08

SCALE: Escala: NONE	DRAWN: Dibujado	FH	8/27/08
	CHECKED: Verificado	RH	9/29/08
	APPROVED: Aprobado	SU	9/29/08
		NAME	DATE

SUBSTITUTE FOR: Substituto Por:
REPLACED BY: Reemplazado Por:
REFERENCE: Referencia:

C	B	A	PIECE/Pieza	DESCRIPTION/Descripción	DIMENSION/Dimensión	ITEM	DRAWING-/PATTERN-NO. Dibujo/Modelo No.	MATERIAL	ITEM WEIGHT Item Peso

TOTAL WEIGHT: Peso Total: Lbs Kg
DRAWING CONSISTS OF: Dibujo Constste De 1 SHEET Hoja
CLASS.-NO.: Parte Número:

CLAUDIUS PETERS TECHNOLOGIES

MATERIAL BALANCE AND FLOW DIAGRAM - MIDDLE BANK SILOS CEMENT EXTRACTION - RAIL

14-1/11347.300D/07

CHANGE ONLY BY CAD-SYSTEM

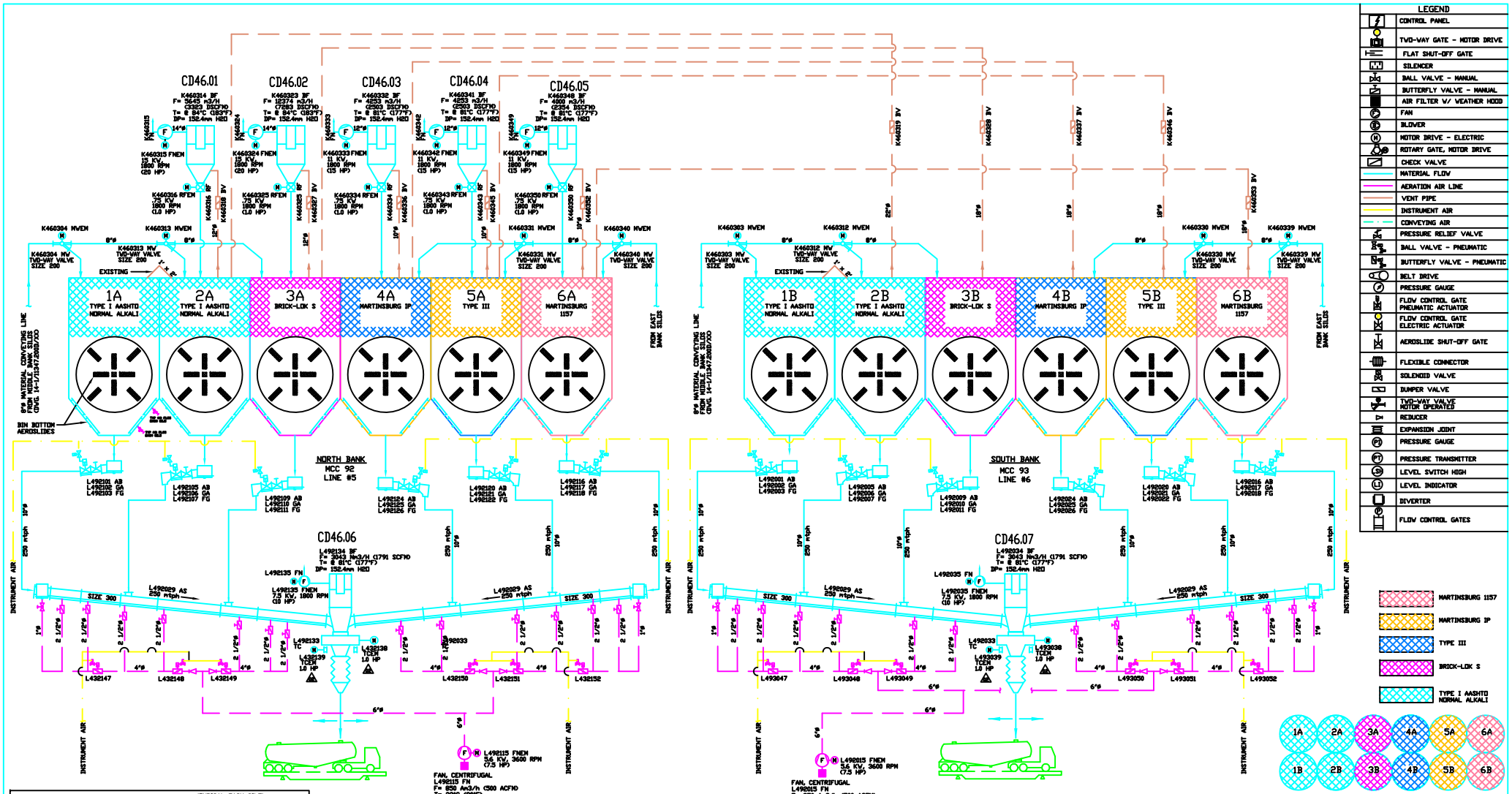

LEGEND

	CONTROL PANEL
	TWO-WAY GATE - MOTOR DRIVE
	FLAT SHUT-OFF GATE
	SILENCER
	BALL VALVE - MANUAL
	BUTTERFLY VALVE - MANUAL
	AIR FILTER W/ WEATHER HOOD
	FAN
	BLOWER
	MOTOR DRIVE - ELECTRIC
	ROTARY GATE, MOTOR DRIVE
	CHECK VALVE
	MATERIAL FLOW
	AERATION AIR LINE
	VENT PIPE
	INSTRUMENT AIR
	CONVEYING AIR
	PRESSURE RELIEF VALVE
	BALL VALVE - PNEUMATIC
	BUTTERFLY VALVE - PNEUMATIC
	BELT DRIVE
	PRESSURE GAUGE
	FLOW CONTROL GATE PNEUMATIC ACTUATOR
	FLOW CONTROL GATE ELECTRIC ACTUATOR
	AEROSLIDE SHUT-OFF GATE
	FLEXIBLE CONNECTOR
	SOLENOID VALVE
	BUMPER VALVE
	TWO-WAY VALVE MOTOR OPERATED
	REDUCER
	EXPANSION JOINT
PT	PRESSURE GAUGE
PT	PRESSURE TRANSMITTER
LSH	LEVEL SWITCH HIGH
LI	LEVEL INDICATOR
	DIVERTER
	FLOW CONTROL GATES

SILOS 1A THRU 6A
PD BLOWER
L492140 FN
F=850 Nm3/h
T=62°C (142°F)
DP=0.28 BAR (4.0 PSIG)
5.6 KV, 3600 RPM
(7.5 HP)

SILOS 1B THRU 6B
PD BLOWER
L493040 FN
F=850 Nm3/h
T=62°C (142°F)
DP=0.28 BAR (4.0 PSIG)
5.6 KV, 3600 RPM
(7.5 HP)

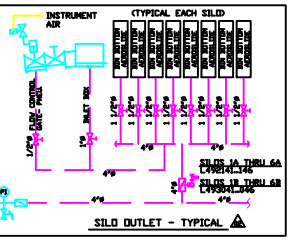

INSTALLATION DATA:

LOCATION:	MARTINSBURG, WV, USA	
ALTITUDE ABOVE SEA LEVEL:	140 m (460 ft)	
AMBIENT TEMPERATURE:	MAX. +32	°C
	MIN. -5	°C
RELATIVE HUMIDITY:	MAX. 95	%
	MAX. 70	%

POWER SUPPLY:

MEDIUM VOLTAGE (OVER 400 HP)	±10%	4,160	V AC
FREQUENCY		60	Hz
LOW VOLTAGE (400 HP AND BELOW)	±10%	460	V AC
FREQUENCY		60	Hz
CONTROL VOLTAGE	±10%	120	V AC
FREQUENCY		60	Hz

MATERIAL DATA:

MATERIAL		CEMENT	
BULK DENSITY, AERATED		1300	kg/m3 (81.218/ft3)
ASSUMED DENSITY STORED IN SILO (NON-AERATED, SOLELY TO BE USED FOR DETERMINATION OF THE STORAGE CAPACITY OF THE SILO)		1400	kg/m3 (87.468/ft3)
SPECIFIC SURFACE (BLAINE)		4500	cm2/g
PARTICLE DENSITY		3200	kg/m3
AVERAGE GRAIN SIZE		0.015	mm
MAX. GRAIN SIZE		0.5	mm
RESIDUE ON 90 um		10	%
MATERIAL MOISTURE CONTENT		10	%
MATERIAL TEMPERATURE	< max	100	°C (212°F)

Customer Review
This drawing is subject to Customer approval.
Customer: ITALCEMENTI (CAPITOL CEMENT)
P.O. No.: 4500010628
CLAUDIUS PETERS (AMERICAS) INC.
By: S. Führer
Date: 12/2/2008 Job No.: 14-1/11347
Customer approval is to include review of material flow, equipment layout, and equipment specifications. Approval does not relieve Claudius Peters of responsibility for equipment and material specifications, equipment layout, and material flow. Claudius Peters is responsible for equipment and material specifications, equipment layout, and material flow only to the extent specified in its offer.

TOLERANCE Tolerancia	DEVIATIONS Desviación
UNLESS OTHER TOLERANCE Desviaciones sin tolerancia	

C	B	A	PIECE/Pieza	DESCRIPTION/Descripción	DIMENSION/Dimensión	ITEM	DRAWING-PATTERN-NO. Dibujo/Modelo No.	MATERIAL	ITEM WEIGHT Item Peso

NO.	REVISION/Revisión		DATE
03	Customer comments	FN	18/8/08
02	Construction issued	FN	12/3/08
01	Internal verification	RH	12/2/08

		NAME	DATE
DRAWN Dibujado	FN	12/2/08
CHECKED Revisado	RH	12/2/08
APPROVED Aprobado	SV	12/2/08

SOLID Escala N.T.S.

MATERIALS FOR Material para REPLACES Reemplazado Por REFERENCE Referencia

TOTAL WEIGHT Peso Total
DRAWING CONTROL BY Dibujo Control por
SHEET Hoja
CLASS-NO. Parte Número

OLAUDIUS PETERS TECHNOLOGIES

EXISTING CEMENT SILO REFURBISHMENT PROJECT
ITALCEMENTI (CAPITOL CEMENT CORP.)
ESSROC - MARTINSBURG NEW LINE
MARTINSBURG, WEST VIRGINIA
CPA PROJECT NO. 14-1/11347

MATERIAL BALANCE AND FLOW DIAGRAM - TRUCK LOADOUT SHIPMENT BINS

14-1/11347.400D/03

CHANGE ONLY BY CAD-SYSTEM

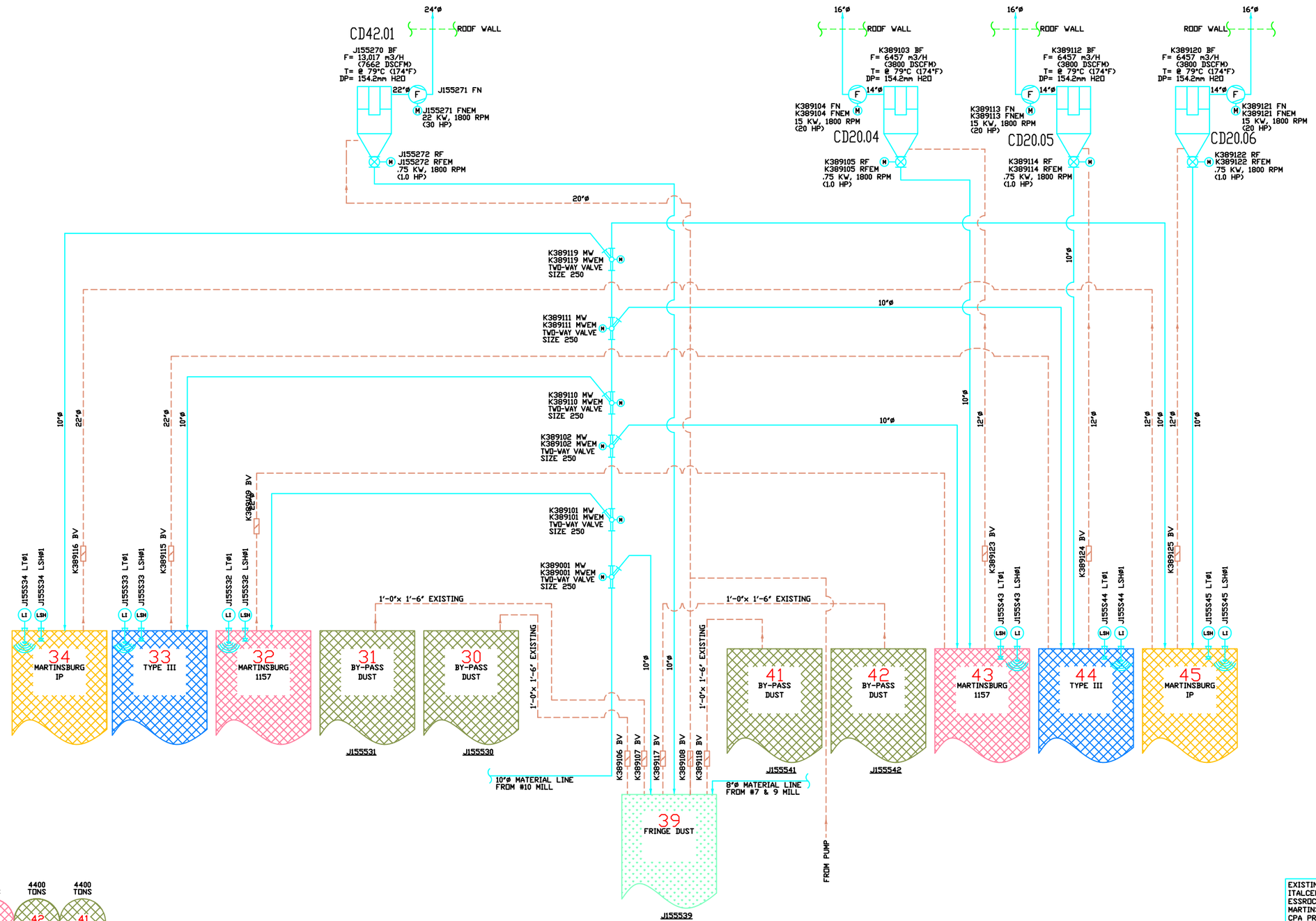

LEGEND

	CONTROL PANEL
	TWO-WAY GATE - MOTOR DRIVE
	FLAT SHUT-OFF GATE
	SILENCER
	BALL VALVE - MANUAL
	BUTTERFLY VALVE - MANUAL
	AIR FILTER W/ WEATHER HOOD
	FAN
	BLOWER
	MOTOR DRIVE - ELECTRIC
	ROTARY GATE, MOTOR DRIVE
	CHECK VALVE
	MATERIAL FLOW
	AERATION AIR LINE
	VENT PIPE
	INSTRUMENT AIR
	CONVEYING AIR
	PRESSURE RELIEF VALVE
	BALL VALVE - PNEUMATIC
	BUTTERFLY VALVE - PNEUMATIC
	BELT DRIVE
	PRESSURE GAUGE
	FLOW CONTROL GATE PNEUMATIC ACTUATOR
	FLOW CONTROL GATE ELECTRIC ACTUATOR
	AEROSLIDE SHUT-OFF GATE
	FLEXIBLE CONNECTOR
	SOLENOID VALVE
	DUMPER VALVE
	TWO-WAY VALVE MOTOR OPERATED
	REDUCER
	EXPANSION JOINT
PI	PRESSURE GAUGE
PT	PRESSURE TRANSMITTER
LSH	LEVEL SWITCH HIGH
LI	LEVEL INDICATOR
	DIVERTER
	FLOW CONTROL GATES

MARTINSBURG 1157

MARTINSBURG IP

TYPE III

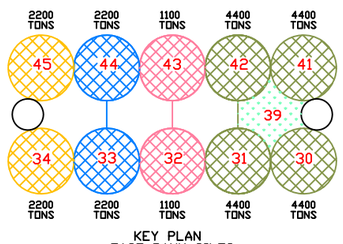

KEY PLAN
EAST BANK SILOS

INSTALLATION DATA:

LOCATION:	MARTINSBURG, WV, USA	
ALTITUDE ABOVE SEA LEVEL:	140 m (460 ft).	
AMBIENT TEMPERATURE:	MAX. +32	°C
	MIN. -5	°C
RELATIVE HUMIDITY:	MAX. 70	%

POWER SUPPLY:

MEDIUM VOLTAGE (OVER 400 HP)	±10%	4,160	V AC
FREQUENCY		60	Hz
LOW VOLTAGE (400 HP AND BELOW)	±10%	460	V AC
FREQUENCY		60	Hz
CONTROL VOLTAGE	±10%	120	V AC
FREQUENCY		60	Hz

MATERIAL DATA:

MATERIAL		CEMENT	
BULK DENSITY, AERATED		1300	kg/m3 (81.21#/ft3)
ASSUMED DENSITY STORED IN SILO (NON-AERATED, SOLELY TO BE USED FOR DETERMINATION OF THE STORAGE CAPACITY OF THE SILO)		1400	kg/m3 (87.46#/ft3)
SPECIFIC SURFACE (BLAINE)		4500	cm2/g
PARTICLE DENSITY		3200	kg/m3
AVERAGE GRAIN SIZE		0.012	mm
MAX. GRAIN SIZE		0.5	mm
RESIDUE ON 90 um		3	%
MATERIAL MOISTURE CONTENT	<	1.0	%
MATERIAL TEMPERATURE	max	100	°C (212°F)

CERTIFIED DRAWING
This drawing is certified for construction.
Customer: *ITALCEMENTI (CAPITOL CEMENT)*
P.O. No. *4600010828*
CLAUDIUS PETERS (AMERICAS) INC.
S. Withrow
Date: *12/3/2008* Job No. *14-1/11347*
Customer comments to Claudius Peters (Americas) Inc approval drawings have been incorporated. Any further customer initiated changes will result in additional costs for engineering and any resulting costs for additional fabrication, assembly or redoing.
No backcharges for field related work of any type will be accepted unless first requested and agreed to in writing.

TOLERANCE Tolerancia	DEVIATIONS Desviación
DIMENSIONS WITHOUT TOLERANCE Dimensiones Sin Tolerancia	
SF	

C	B	A	PIECE/Pieza	DESCRIPTION/Descripción	DIMENSION/Dimensión	ITEM	DRAWING-/PATTERN-NO. Dibujo/Modelo No.	MATERIAL	ITEM WEIGHT Item Peso

NO.	REVISION/Revisión	NAME	DATE
02	Customer comments	FN	12/3/08
01	Construction Bid	FN	11/21/08
00	General update	SV	10/24/08

		NAME	DATE
SCALE: Escala: NONE	DRAWN Dibujado	FN	9/19/08
	CHECKED Verificado	RH	9/19/08
	APPROVED Aprobado	SV	9/19/08

SUBSTITUTE FOR Substituto Por
REPLACED BY Reemplazado Por
REFERENCE: Referencia

TOTAL WEIGHT: Peso Total: Lbs Kg
DRAWING CONSISTS OF: Dibujo Constaba De: 1 SHEET Hoja
CLASS.-NO. Parte Número:

CLAUDIUS PETERS TECHNOLOGIES

EXISTING CEMENT SILO REFURBISHMENT PROJECT
ITALCEMENTI (CAPITOL CEMENT CORP.)
ESSROC - MARTINSBURG NEW LINE
MARTINSBURG, WEST VIRGINIA
CPA PROJECT NO. 14-1/11347

MATERIAL BALANCE AND FLOW DIAGRAM - CEMENT DISTRIBUTION/ FEED SYSTEM - EAST BANK SILOS

14-1/11347.500D/03

CHANGE ONLY BY CAD-SYSTEM

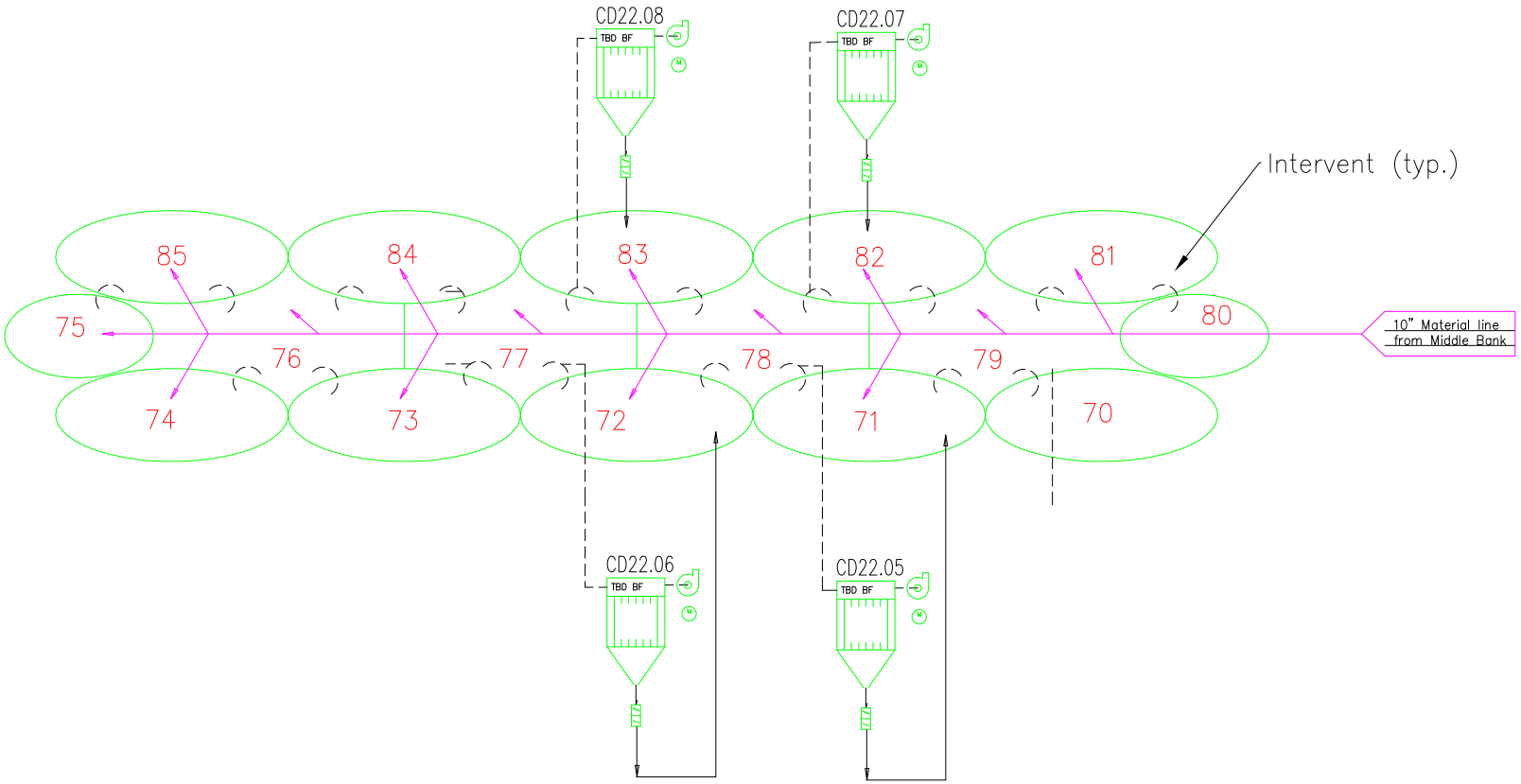

CTG
Italcementi Group
Servizio Impianti Industriali

COMPANY	CAPITOL CEMENT CO.
PLANT	MARTINSBURG
DEPT.	Existing Plant
PROJECT CODE	POS.

EXISTING PRODUCTION LINE
West Bank Silos Dust Collection – FLOW SHEET

DRAWN UP BY	APP'D BY	DATE	DWG N.	REV.
Ciampa		14.02.2011	Diagram C-7	00

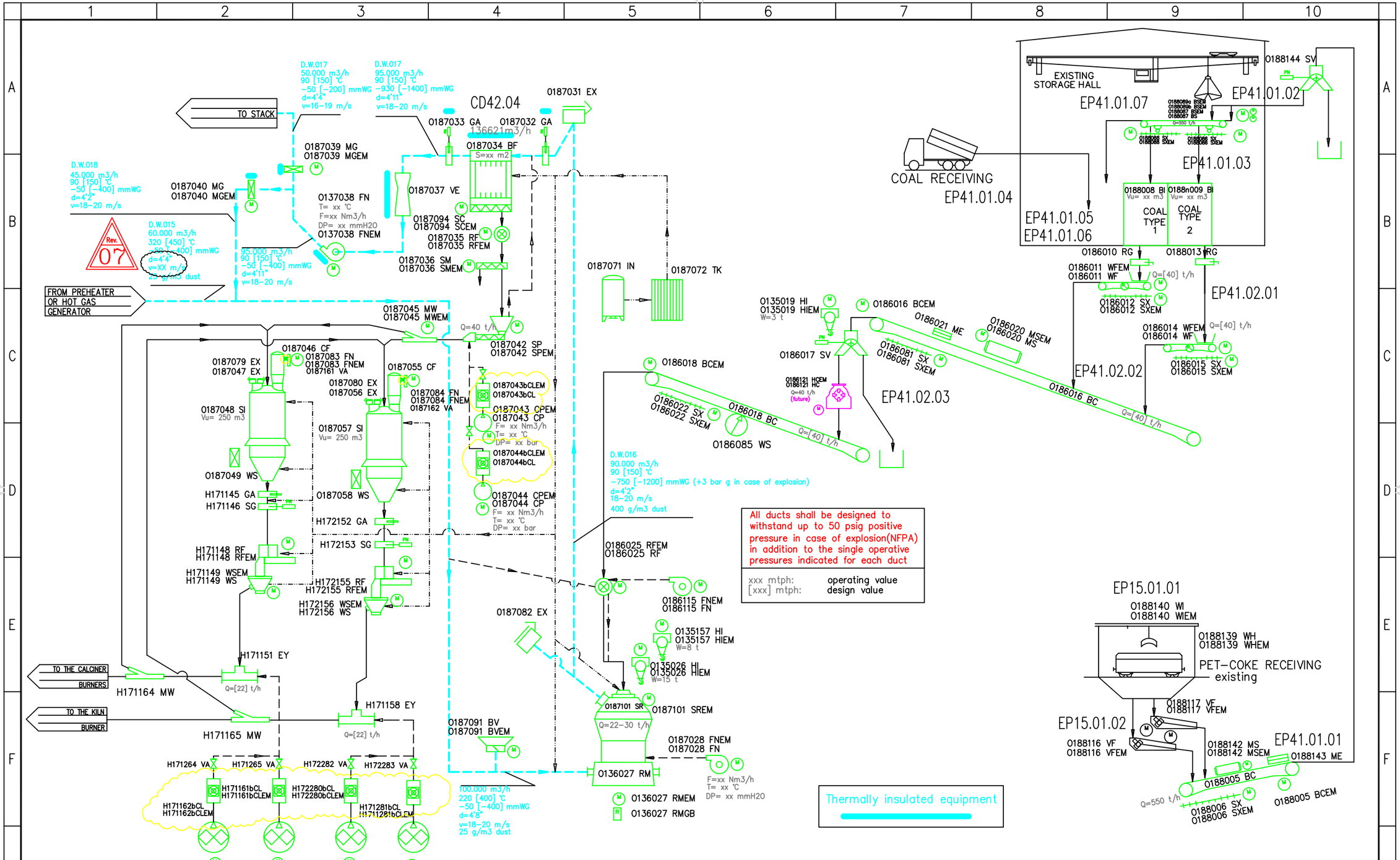

08	Revised where clouded	ERASMO M.	ERASMO M.	31.AUG.2008
07	Revised where clouded	VENTURELLI	VENTURELLI	13.AUG.2007
06	Revised where clouded	ERASMO M.	ERASMO M.	07.FEB.07
05	ADDED CaCl2 DOSING SYSTEM	ERASMO M.	ERASMO M.	03.JAN.06

CTG
Italcementi Group
Servizio Impianti Industriali

COMPANY CAPITOL CEMENT CO.
PLANT MARTINSBURG
DEPT. 203
PROJECT CODE F603C001 POS.

NEW PRODUCTION LINE
COAL MILL – FLOW SHEET

DRAWN UP BY	APP'D BY	DATE	DWG N.	REV.
ERASMO M.	ERASMO M.	03.01.2006	MAR-203-004	08

by AUTOCAD A3

ATTACHMENT D – TITLE V EQUIPMENT TABLE

Included in this section is an Attachment D – Title V Equipment Table, which includes all emissions units at the facility except for those designated as insignificant activities in Section 4, Item 24 of the General Form.

ATTACHMENT D - Title V Equipment Table

(includes all emission units at the facility except those designated as insignificant activities in Section 4, Item 24 of the General Forms)

Emission Point ID[1]	Control Device[1]	Emission Unit ID[1]	Emission Unit Description	Design Capacity	Year Installed/ Modified
EP0X.01	PE	EP0X.01	Quarry drilling	4,490,653 TPY	N/A
EP0X.02	PE	EP0X.02	Quarry blasting	4,490,653 TPY	N/A
EP0X.03.01	PE	EP0X.03.01	Loader to truck (good rock)	4,276,653 TPY	N/A
EP0X.03.02	PE	EP0X.03.02	Loader to truck (waste rock)	213,841 TPY	N/A
EP0X.03.03	PE	EP0X.03.03	Truck to waste pile	213,841 TPY	N/A
EP37.02.01	WS	EP37.02.01	Truck (T) to large bin (LB)	4,125,933 TPY	2009
EP37.02.02	WS, PE	EP37.02.02	Large Bin (LB) to conveyor (C1)	4,125,933 TPY	2009
CD37.03	CD37.03	EP37.03.01	Conveyor (C1) to Feeder (F1)	4,125,933 TPY	2009
CD37.03	CD37.03	EP37.03.02	Conveyor (C1) to Hammermill (H1)	4,125,933 TPY	2009
CD37.03	CD37.03	EP37.03.03	Hammermill (H1) to Feeder (F1)	4,125,933 TPY	2009
CD37.03	CD37.03	EP37.03.04	Feeder (F1) to Conveyor (C2)	4,125,933 TPY	2009
		CD37.03	New Primary Crusher D\C	41,200 dscfm	2009
CD37.04	CD37.04	EP37.04.01	Conveyor (C2) to Split (SPT1)	4,125,933 TPY	2009
CD37.04	CD37.04	EP37.04.02	Split (SPT1) to Conveyor (C3)	4,125,933 TPY	2009
		CD37.04	Crushing System Transfer Tower	4,709 dscfm	2009
EP37.05		EP37.05	Split (SPT1) to Surge Pile (SP1)	412,593 TPY	2009
CD37.06	CD37.06	EP37.06.01	Conveyor (C3) to Split (SPT2)	4,125,933 TPY	2009
CD37.06	CD37.06	EP37.06.02	Split (SPT2) to Top Conveyor (TC1)	3,395,680 TPY	2009
CD37.06	CD37.06	EP37.06.03	Split (SPT2) to Bottom Conveyor (BC1)	4,125,933 TPY	2009
		CD37.06	Premix Conveying D\C	6,357 dscfm	2009
CD38.01	CD38.01	EP38.01.01	Top Conveyor (TC1) to Swing Conveyor (SW1)	3,395,680 TPY	2009
CD38.01	CD38.01	EP38.01.02	Swing Conveyor (SW1) to Limestone Pile (LP)	3,395,680 TPY	2009
		CD38.01	Premix Storage Feeding D\C	2,119 dscfm	2009
EP37.06		EP37.06	Limestone Crusher Feed Pile (For Finish Mills)	66,138 TPY	2015
EP37.07		EP37.07	Limestone Crusher Feed Pile Reclaim	66,138 TPY	2015

[1]For 45CSR13 permitted sources, the numbering system used for the emission points, control devices, and emission units should be consistent with the numbering system used in the 45CSR13 permit. For grandfathered sources, the numbering system should be consistent with registrations or emissions inventory previously submitted to DAQ. For emission points, control devices, and emissions units which have not been previously labeled, use the following 45CSR13 numbering system: 1S, 2S, 3S,... or other appropriate description for emission units; 1C, 2C, 3C,... or other appropriate designation for control devices; 1E, 2E, 3E, ... or other appropriate designation for emission points.

ATTACHMENT D - Title V Equipment Table

(includes all emission units at the facility except those designated as insignificant activities in Section 4, Item 24 of the General Forms)

Emission Point ID[1]	Control Device[1]	Emission Unit ID[1]	Emission Unit Description	Design Capacity	Year Installed/ Modified
EP37.08	WS	EP37.08	Limestone/Clinker Storage Pile (Quarry)	132,276 TPY	2015
EP37.09		EP37.09	Limestone/Clinker Reclaim from Quarry Storage Pile	132,276 TPY	2015
EP37.10	PE	EP37.10	Truck Dump to Craneway Storage Pile	132,276 TPY	2015
EP37.11	PE	EP37.11	Limestone/Clinker Storage Pile (Outside Craneway)	132,276 TPY	2016
EP37.12	PE	EP37.12	Limestone/Clinker Transfer to Craneway Storage Building	132,276 TPY	2016
EP37.13		EP37.13	Clinker Transfer from Craneway to Truck	66,138 TPY	2016
EP37.14	WS	EP37.14	Limestone Dump to Mobile Crushers	4,125,933 TPY	TBD
EP37.15	PE	EP37.15	Mobile Limestone Crushers Operations	4,125,933 TPY	TBD
CD38.02	CD38.02	EP38.02.01	Pile (LP) to Feeder 1 (FD1)	3,395,680 TPY	2009
CD38.02	CD38.02	EP38.02.02	Feeder 1 (FD1) to Bottom Conveyor (BC2)	3,395,680 TPY	2009
CD38.02	CD38.02	EP38.02.03	Pile (LP) to Feeder 2 (FD2)	3,395,680 TPY	2009
CD38.02	CD38.02	EP38.02.04	Feeder 2 (FD2) to Bottom Conveyor (BC2)	3,395,680 TPY	2009
		CD38.02	Premix Storage Discharge D\C	2,119 dscfm	2009
CD39.01	CD39.01	EP39.01.01	Conveyor (BC1) to Split (SPT3)	949,330 TPY	2009
CD39.01	CD39.01	EP39.01.02	Split (SPT3) to Conveyor (C4)	949,330 TPY	2009
CD39.01	CD39.01	EP39.03.02	Conveyor (C4) to Shale Bin (SB)	730,254 TPY	2009
CD39.01	CD39.01	EP39.04.01	Conveyor (C4) to Shale Bin 2 (SB2)	730,254 TPY	2009
CD39.01	CD39.01	EP39.07.01	Split (SPT3) to Pyrite Silo (P S)	36,513 TPY	2009
CD39.01	CD39.01	EP39.08.01	Split (SPT3) to sand silo (SS)	182,563 TPY	2009
		CD39.01	Additive Feeding System D\C	7,416 dscfm	2009
CD39.02	CD39.02	EP39.03.01	Conveyor (BC2) to Limestone Mix Bin (LMB)	3,395,680 TPY	2009
		CD39.02	Limestone Bin D\C	2,119 dscfm	2009
CD39.03	CD39.03	EP39.03.03	Shale Bin (SB) to Feeder (SBF)	730,254 TPY	2009
CD39.03	CD39.03	EP39.03.04	Shale Bin Feeder (SBF) to Conveyor (C5)	730,254 TPY	2009
CD39.03	CD39.03	EP39.02.01	Conveyor (C6) Limestone Mix Bin (LMB) to Feeder (LMBF)	3,395,680 TPY	2009

[1]For 45CSR13 permitted sources, the numbering system used for the emission points, control devices, and emission units should be consistent with the numbering system used in the 45CSR13 permit. For grandfathered sources, the numbering system should be consistent with registrations or emissions inventory previously submitted to DAQ. For emission points, control devices, and emissions units which have not been previously labeled, use the following 45CSR13 numbering system: 1S, 2S, 3S,... or other appropriate description for emission units; 1C, 2C, 3C,... or other appropriate designation for control devices; 1E, 2E, 3E, ... or other appropriate designation for emission points.

ATTACHMENT D - Title V Equipment Table

(includes all emission units at the facility except those designated as insignificant activities in Section 4, Item 24 of the General Forms)

Emission Point ID[1]	Control Device[1]	Emission Unit ID[1]	Emission Unit Description	Design Capacity	Year Installed/ Modified
CD39.03	CD39.03	EP39.02.02	Limestone Mix Feeder (LMBF) to Conveyor (C5)	3,395,680 TPY	2009
CD39.03	CD39.03	EP39.07.02	Pyrite Silo (PS) to Feeder (PSF)	36,513 TPY	2009
EP39.07.03	CD39.03	EP39.07.03	Pyrite Silo Feeder (PSF) to Conveyor (C5)	36,513 TPY	2009
CD39.03	CD39.03	EP39.08.02	Sand Silo (SS) to Feeder (SSF)	182,563 TPY	2009
CD39.03	CD39.03	EP39.08.03	Sand Silo Feeder (SSF) to Conveyor (C5)	182,563 TPY	2009
		CD39.03	Raw Material Discharge D\C1	4,238 dscfm	2009
CD39.04	CD39.04	EP39.04.02	Shale Silo 2 (SB2) to Feeder (SB2F)	730,254 TPY	2009
CD39.04	CD39.04	EP39.04.03	High Silo Feeder (HSF) Shale Silo 2 Feeder (SB2F) to Conveyor (C5)	730,254 TPY	2009
		CD39.04	Raw Material Discharge D\C2	3,178 dscfm	2009
CD39.05	CD39.05	EP39.05	Additive Truck (T3) to Conveyor (C6)	219,076 TPY	2009
CD39.05	CD39.05	EP39.04.04	Conveyor (C6) to Conveyor (C7)	219,076 TPY	2009
		CD39.05	Additives Delivery System D\C	29,429 dscfm	2009
EP40.03		EP40.03	Split to Surge Pile (SP3)		2009
CD39.06	CD39.06	EP39.06.01	Raw Mill Feed Conveyor (C5)	3,651,268 TPY	2009
		CD39.06	Raw Mill Feeding D\C	2,119 dscfm	2009
CD40.01	CD40.01	EP40.01.01	RM Feed Conveyor (C5) to conveyor (C6)	3,651,268 TPY	2009
CD40.01	CD40.01	EP40.01.02	Conveyor (C6) to Split (SPT4)	3,651,268 TPY	2009
CD40.01	CD40.01	EP40.01.03	Split (SPT4) to Hopper (HP1)	3,651,268 TPY	2009
CD40.01	CD40.01	EP40.02.03	Bucket Elevator (BE2) to Conveyor (C6)	3,651,268 TPY	2009
CD40.01	CD40.01	EP40.04.01	Split (SPT4) to Raw Mill (RM1)	3,651,268 TPY	2009
		CD40.01	Raw Mill High Zone D\C	9,005 dscfm	TBD
CD40.02	CD40.02	EP40.02.01	Conveyor (C7) to Split (SPT5)	3,651,268 TPY	2009
CD40.02	CD40.02	EP40.02.02	Split (SPT5) to Bucket Elevator (BE2)	3,651,268 TPY	2009
CD40.02	CD40.02	EP40.04.02	Raw Mill (RM1) to conveyor (C8)	3,651,268 TPY	2009
CD40.02	CD40.02	EP40.02.04	Conveyor (C8) to Bucket Elevator (BE2)	3,651,268 TPY	2009

[1]For 45CSR13 permitted sources, the numbering system used for the emission points, control devices, and emission units should be consistent with the numbering system used in the 45CSR13 permit. For grandfathered sources, the numbering system should be consistent with registrations or emissions inventory previously submitted to DAQ. For emission points, control devices, and emissions units which have not been previously labeled, use the following 45CSR13 numbering system: 1S, 2S, 3S,... or other appropriate description for emission units; 1C, 2C, 3C,... or other appropriate designation for control devices; 1E, 2E, 3E, ... or other appropriate designation for emission points.

ATTACHMENT D - Title V Equipment Table

(includes all emission units at the facility except those designated as insignificant activities in Section 4, Item 24 of the General Forms)

Emission Point ID[1]	Control Device[1]	Emission Unit ID[1]	Emission Unit Description	Design Capacity	Year Installed/ Modified
		CD40.02	Raw Mill Low Zone D\C	7,416 dscfm	2009
CD40.05	CD40.05	EP40.05	Raw Meal Conveying Equipment	3,651,268 TPY	2009
		CD40.05	Raw Meal Air Slide D\C	4,803 dscfm	2009
CD40.06	CD40.06	EP40.06	Homogenizing Silo Feeding Equipment	3,651,268 TPY	2009
		CD40.06	Homogenizing Silo Feeding D\C	5,297 dscfm	2009
CD40.07	CD40.07	EP40.07	Homogenizing Silo Discharging Equipment	3,651,268 TPY	2009
		CD40.07	Homogenizing Silo Discharge D\C	4,238 dscfm	2009
CD40.08	CD40.08	EP40.08	Top of Homogenizing Silo	3,651,268 TPY	2010
		CD40.08	Top of Homo Silo D\C	2220 dscfm	2010
EP39.07.04		EP39.07.04	Inert Raw Material Hauling to Quarry (Paved)	882 VMT/year	2011
EP39.07.05		EP39.07.05	Inert Raw Material Hauling to Quarry (Unpaved)	7,055 VMT/year	2011
EP39.08		EP39.08	Inert Raw Material Truck Dump to Pile	220,460 ston/yr	2011
EP39.09		EP39.09	Inert Raw Material Storage Pile (Within Mines)	0.5 acres	2011
EP39.10		EP39.10	Inert Raw Material Pile Reclaim	220,460 ston/yr	2011
EP39.11		EP39.11	Inert Raw Material Dump to Primary Crusher	220,460 ston/yr	2011
EP39.12.01		EP39.12.01	Hauling to Additives Unloading Bin (Paved)	529 VMT/year	2011
EP39.12.02		EP39.12.02	Hauling to Additives Unloading Bin (Unpaved)	1,058 VMT/year	2011
EP39.14		EP39.14	Additive dump to pile in Additives Storage Building	314,156 TPY	TBD
EP39.15		EP39.15	Additive Storage Building (4 piles)	314,156 TPY	TBD
EP39.16		EP39.16	Reclaim from additives pile	314,156 TPY	TBD
CD42.02	CD42.02	EP42.02	Kiln Feeding Bucket Elevator D\C	3,651,268 TPY	
		CD42.02	Kiln Feeding Bucket Elevator D\C	5,297 dscfm	
CD42.03	CD42.03	EP42.03	Kiln Feed Belt	3,651,268 TPY	
		CD42.03	Kiln Feeding D\C1	12,713 dscfm	

[1]For 45CSR13 permitted sources, the numbering system used for the emission points, control devices, and emission units should be consistent with the numbering system used in the 45CSR13 permit. For grandfathered sources, the numbering system should be consistent with registrations or emissions inventory previously submitted to DAQ. For emission points, control devices, and emissions units which have not been previously labeled, use the following 45CSR13 numbering system: 1S, 2S, 3S,... or other appropriate description for emission units; 1C, 2C, 3C,... or other appropriate designation for control devices; 1E, 2E, 3E, ... or other appropriate designation for emission points.

ATTACHMENT D - Title V Equipment Table

(includes all emission units at the facility except those designated as insignificant activities in Section 4, Item 24 of the General Forms)

Emission Point ID[1]	Control Device[1]	Emission Unit ID[1]	Emission Unit Description	Design Capacity	Year Installed/ Modified
CD42.04	CD42.04	EP42.04	Kiln System – Inline Raw Mill/PH/PC Kiln/Clinker Cooler	In = 3,651,268 TPY of Kiln Feed Out = 2,212,890 TPY of Clinker	2009
CD42.04	CD42.04	EP42.08	Kiln Bypass Baghouse DC	N/A	2009
CD42.04	CD42.04	EP41.03.01	Coal Mill	292,110 TPY	2009
		CD42.04	Inline Raw Mill/PH/PC Kiln/Clinker Cooler & Bypass & Coal Mill D\C	713,986 dscfm	2009
CD42.05	CD42.05	EP42.05	Kiln Feed Belt	3,651,268 TPY	2009
		CD42.05	Kiln Feeding D\C2	2,119 dscfm	2009
CD42.01	CD42.01	EP42.01	Cement Fringe Bin	176,368 TPY	2009
		CD42.01	Cement Fringe Bin D/C	7,662 dscfm	2009
CD42.06	CD42.06	EP42.06	Lime Storage for Scrubber System	77,161 TPY	2009
		CD42.06	Lime Storage D\C	1,000 dscfm	2009
CD42.07	CD42.07	EP42.07	Bypass Truck Spout Dedusting	N/A	2009
		CD42.07	Bypass Truck Spout Dedusting	294 dscfm	2009
CD43.03	CD43.03	EP43.05	Clinker Conveyor to big clinker silo (ClC1)	2,212,890 TPY	2009
		CD43.03	Clinker Storage Feeding D\C	7,063 dscfm	2009
CD43.19	CD43.19	EP43.19	Top of LA Clinker Silo	2,212,890 TPY	TBD
		CD43.19	Top of LA Clinker Silo DC	6,500 dscfm	TBD
CD43.20	CD43.20	EP43.20	Normal Clinker Bin at Pan Conv. 73	2,212,890 TPY	2013
		CD43.20	Normal Clinker Bin at Pan Conv. 73 D/C	9,500 dscfm	2013
CD43.21	CD43.21	EP43.21	Top of Normal Clinker Silo	2,212,890 TPY	2013
		CD43.21	Top of Normal Clinker Silo DC	8,000 dscm	2013
CD43.04	CD43.04	EP43.04	Clinker Conveyor to Clinker Silo (C1C2)	2,212,890 TPY	2009
		CD43.04	Small Clinker Storage Feeding D\C	3,178 dscfm	2009
CD43.06	CD43.06	EP43.06.01	Low alkali clinker silo (LACS) to upper conveyors UCS	2,212,890 TPY	2009
CD43.06	CD43.06	EP43.06.02	Upper conveyors (UCS) to lower conveyor (LC)	2,212,890 TPY	2009

[1]For 45CSR13 permitted sources, the numbering system used for the emission points, control devices, and emission units should be consistent with the numbering system used in the 45CSR13 permit. For grandfathered sources, the numbering system should be consistent with registrations or emissions inventory previously submitted to DAQ. For emission points, control devices, and emissions units which have not been previously labeled, use the following 45CSR13 numbering system: 1S, 2S, 3S,... or other appropriate description for emission units; 1C, 2C, 3C,... or other appropriate designation for control devices; 1E, 2E, 3E, ... or other appropriate designation for emission points.

ATTACHMENT D - Title V Equipment Table

(includes all emission units at the facility except those designated as insignificant activities in Section 4, Item 24 of the General Forms)

Emission Point ID[1]	Control Device[1]	Emission Unit ID[1]	Emission Unit Description	Design Capacity	Year Installed/ Modified
CD43.06	CD43.06	EP43.06.03	Low alkali clinker silo to lower conveyor (LC)	2,212,890 TPY	2009
		CD43.06	Small Clinker Storage Discharge D\C	2,119 dscfm	2009
CD43.07	CD43.07	EP43.07.01	Big clinker silo (BCS) to upper conveyor 1 (UC1)	2,212,890 TPY	2009
CD43.07	CD43.07	EP43.07.02	Big clinker silo (BCS) to upper conveyor 2 (UC2)	2,212,890 TPY	2009
CD43.07	CD43.07	EP43.07.03	Big clinker silo (BCS) to lower conveyor (LC)	2,212,890 TPY	2009
CD43.07	CD43.07	EP43.07.04	Big clinker silo (BCS) to short conveyor (SC)	2,212,890 TPY	2009
CD43.07	CD43.07	EP43.07.05	Short conveyor (SC) to lower conveyor (LC)	2,212,890 TPY	2009
		CD43.07	Clinker Storage Discharge D\C	2,119 dscfm	2009
	CD43.08	EP43.08	Upper conveyor 1 (UC1) to FM feed hoppers belt (FM FHB)	2,212,890 TPY	2009
		CD43.08	Finish Mill Conveying D\C1	2,119 dscfm	2009
	CD43.09	EP43.09	Lower Conveyor (LC) to FM feed hoppers belt (FM FHB)	2,212,890 TPY	2009
		CD43.09	Finish Mill Conveying D\C2	2,119 dscfm	2009
	CD43.13	EP43.13	Upper conveyor 2 (UC2) to FM feed hoppers belt (FM FHB)	2,212,890 TPY	2009
		CD43.13	Finish Mill Conveying D\C3	2,119 dscfm	2009
EP15.01.01	PE	EP15.01.01	Rail Unloading (RU) to Petcoke Hopper (PH)	116,844 TPY	1966, 1972, and 2009
EP15.01.02	PE	EP15.01.02	Petcoke Hopper (PH) to feeders (PF)	116,844 TPY	1966, 1972, and 2009
EP41.01.01	WS	EP41.01.01	Petcoke feeders (PF) to conveyor (PC1)	116,844 TPY	2009
EP41.01.02	WS	EP41.01.02	Petcoke conveyor (PC1) to split to conveyor (PC2)	116,844 TPY	2009
EP41.01.03	PE	EP41.01.03	Petcoke Conveyor (PC2) to CSH Fuel Bins (FB) or pile	116,844 TPY	2009
EP41.01.04	PE	EP41.01.04	Coal truck unloading (TU) to storage hall (CSH)	175,266 TPY	2009
EP41.01.05	PE	EP41.01.05	Clam bucket (CB) to coal pile (CP)	175,266 TPY	2009
EP41.01.06	PE	EP41.01.06	Pile (CP) to clam bucket (CB)	292,110 TPY	2009
EP41.01.07	PE	EP41.01.07	Clam bucket (CB) to CSH fuel bins (FB)	292,110 TPY	2009
EP41.02.01	PE	EP41.02.01	CSH Fuel Bins (FB) to feeders (FB FD)	292,110 TPY	2009
EP41.02.02	WS	EP41.02.02	Feeders (FB FD) to Conveyor (CM C1)	292,110 TPY	2009

[1]For 45CSR13 permitted sources, the numbering system used for the emission points, control devices, and emission units should be consistent with the numbering system used in the 45CSR13 permit. For grandfathered sources, the numbering system should be consistent with registrations or emissions inventory previously submitted to DAQ. For emission points, control devices, and emissions units which have not been previously labeled, use the following 45CSR13 numbering system: 1S, 2S, 3S,... or other appropriate description for emission units; 1C, 2C, 3C,... or other appropriate designation for control devices; 1E, 2E, 3E, ... or other appropriate designation for emission points.

ATTACHMENT D - Title V Equipment Table

(includes all emission units at the facility except those designated as insignificant activities in Section 4, Item 24 of the General Forms)

Emission Point ID[1]	Control Device[1]	Emission Unit ID[1]	Emission Unit Description	Design Capacity	Year Installed/ Modified
EP41.02.03	WS	EP41.02.03	Conveyor (CM C1) to split to conveyor (CM C2)	292,110 TPY	2009
CD42.04	CD42.04	EP41.02.04	Conveyor (CM C2) to Coal Mill (CM)	292,110 TPY	2009
CD43.14	CD43.14	EP43.14	Conveyor (FM FHB) to clinker feeding hoppers (CFH1/2) (FM 1&2)	2,212,890 TPY	2009
CD43.14	CD43.14	EP43.15	Conveyor (FM FHB) to lower conveyor (LC2) (FM3)	2,212,890 TPY	2009
		CD43.14	Finish Mill 1 & 2 Hoppers D\C	5,297 dscfm	2009
CD43.16	CD43.16	EP43.16	Lower conveyor (LC2) to clinker feeding hopper (CFH3) (FM3)	2,212,890 TPY	2009
		CD43.16	Finish Mill 3 Hopper D\C	5,297 dscfm	2009
CD43.17	CD43.17	EP43.17	Normal Clinker Bin-Bin Vent	2,212,890 TPY	2010
		CD43.17	Normal Clinker Bin-Bin Vent D\C	2,793 dscfm	2010
EP26.06.03		EP26.06.03	Gypsum/synthetic gypsum truck unloading (GTU) to storage hall (SH)	150,879 TPY	2009
EP26.06.04	PE	EP26.06.04	Clam bucket (CB1) to gypsum/synthetic gypsum pile (GP)	150,879 TPY	2009
EP26.06.05	PE	EP26.06.05	Gypsum/synthetic gypsum pile (GP) to clam bucket (CB1)	150,879 TPY	2009
EP26.06.06	PE	EP26.06.06	Clam bucket (CB1) to gypsum/synthetic gypsum bin (GB) (FM1/2/3)	150,879 TPY	2009
EP26.07.01	PE	EP26.07.01	Limestone Pile (LP) to clam bucket (CB1)	150,879 TPY	2009
EP26.07.02	PE	EP26.07.02	Clam bucket (CB1) to limestone bin (LB) (FM1/2/3)	150,879 TPY	2009
EP27.01	PE	EP27.01	Conveyor (FM FHB) to clinker hopper (CFH1/2)	25,000 TPY	2009
EP27.02	PE	EP27.02	Clinker hopper (CFH1/2) to crane (CB1)	25,000 TPY	2009
EP27.03	PE	EP27.03	Crane (CB1) to clinker pile (CP)	25,000 TPY	2009
EP27.04	PE	EP27.04	Clinker pile (CP) to crane (CB1)	25,000 TPY	2009
EP27.05	PE	EP27.05	Crane (CB1) to clinker bins (CFH1/2 & CFH3) (FM1/2/3)	25,000 TPY	2009
EP27.06	WS	EP27.06	Transfer to Outdoor Clinker Storage Piles	55,115 TPY	2015
EP27.07		EP27.07	Outdoor Clinker Storage Piles – Tarped	55,115 TPY	2015
EP27.08	WS	EP27.08	Outdoor Clinker Storage Piles Reclaim	55,115 TPY	2015
	CD44.01	EP44.01	L.A. clinker bin (LACB) to FM2 conveyor (FM2C)	2,212,890 TPY	2009
		CD44.01	Finish Mill 2 Feeding System D\C1	3,178 dscfm	2009

[1]For 45CSR13 permitted sources, the numbering system used for the emission points, control devices, and emission units should be consistent with the numbering system used in the 45CSR13 permit. For grandfathered sources, the numbering system should be consistent with registrations or emissions inventory previously submitted to DAQ. For emission points, control devices, and emissions units which have not been previously labeled, use the following 45CSR13 numbering system: 1S, 2S, 3S,... or other appropriate description for emission units; 1C, 2C, 3C,... or other appropriate designation for control devices; 1E, 2E, 3E, ... or other appropriate designation for emission points.

ATTACHMENT D - Title V Equipment Table

(includes all emission units at the facility except those designated as insignificant activities in Section 4, Item 24 of the General Forms)

Emission Point ID[1]	Control Device[1]	Emission Unit ID[1]	Emission Unit Description	Design Capacity	Year Installed/ Modified
CD44.02	CD44.02	EP44.02	Clinker bin (CB) to FM1 conveyor (FM1C)	2,212,890 TPY	2009
		CD44.02	Finish Mill 1 Feeding D\C1	3,178 dscfm	2009
CD44.03	CD44.03	EP44.03	Clinker Bin (CB) to FM2 conveyor (FM2C)	2,212,890 TPY	2009
		CD44.03	Finish Mill 2 Feeding D\C2	2,119 dscfm	2009
CD44.04	CD44.04	EP44.04.01	Limestone bin (LB) to FM2 conveyor (FM2C)	150,879 TPY	2009
CD44.04	CD44.04	EP44.04.02	Gypsum/synthetic gypsum bin (GB) to FM2 conveyor (FM2C)	150,879 TPY	2009
		CD44.04	Finish Mill 2 Feeding D\C3	3,178 dscfm	2009
CD44.05	CD44.05	EP44.05.01	Limestone bin (LB) to FM1 conveyor (FM1C)	150,879 TPY	2009
CD44.05	CD44.05	EP44.05.02	Gypsum/synthetic gypsum bin (GB) to FM1 conveyor (FM1C)	150,879 TPY	2009
		CD44.05	Finish Mill 1 Feeding D\C 2	3,178 dscfm	2009
CD44.06	CD44.06	EP44.06	FM1 conveyor (FM1C) to conveyor (FM1C2)	1,839,600 TPY	2009
		CD44.06	Finish Mill 1 Conveying D\C	3,178 dscfm	2009
CD44.07	CD44.07	EP44.07.01	Elevator (EL1) to FM1 conveyor (FM1C2)	1,839,600 TPY	2009
CD44.07	CD44.07	EP44.07.02	FM1 Conveyor (FM1C2) to bin (FM1B)	1,839,600 TPY	2009
CD44.07	CD44.07	EP44.07.03	Conveyor (FM1C2) to Finish Mill 1 (FM1)	1,839,600 TPY	2009
		CD44.07	Finish Mill 1 High Zone D\C	7,416 dscfm	2009
CD44.18	CD44.18	EP44.18	Finish Mill 1 Reject Elevator High Zone	1,839,600 TPY	TBD
		CD44.18	Finish Mill 1 Reject Elevator High Zone D/C	1,500 dscfm	TBD
CD44.08	CD44.08	EP44.08.01	Finish Mill 1 (FM1) to conveyor (FM1C3)	1,839,600 TPY	2009
CD44.08	CD44.08	EP44.08.02	Bin (FM1B) to FM1 conveyor (FM1C3)	1,839,600 TPY	2009
CD44.08	CD44.08	EP44.08.03	FM1 Conveyor (FM1C3) to bucket elevator (EL1)	1,839,600 TPY	2009
		CD44.08	Finish Mill 1 Low Zone D\C	4,238 dscfm	2009
CD44.09	CD44.09	EP44.09	Finish Mill 1	1,839,600 TPY	2009
		CD44.09	Finish Mill 1 D\C	76,515 dscfm	2009
CD44.13	CD44.13	EP44.13	Finish Mill 1 Conveying	1,839,600 TPY	2009

[1]For 45CSR13 permitted sources, the numbering system used for the emission points, control devices, and emission units should be consistent with the numbering system used in the 45CSR13 permit. For grandfathered sources, the numbering system should be consistent with registrations or emissions inventory previously submitted to DAQ. For emission points, control devices, and emissions units which have not been previously labeled, use the following 45CSR13 numbering system: 1S, 2S, 3S,... or other appropriate description for emission units; 1C, 2C, 3C,... or other appropriate designation for control devices; 1E, 2E, 3E, ... or other appropriate designation for emission points.

ATTACHMENT D - Title V Equipment Table

(includes all emission units at the facility except those designated as insignificant activities in Section 4, Item 24 of the General Forms)

Emission Point ID[1]	Control Device[1]	Emission Unit ID[1]	Emission Unit Description	Design Capacity	Year Installed/ Modified
		CD44.13	Finish Mill 1 Discharge D\C	2,119 dscfm	2009
CD44.14	CD44.14	EP44.14	FM2 Conveyor (FM2C) to conveyor (FM2C2)	1,839,600 TPY	2009
		CD44.14	Finish Mill 2 Conveying D\C	3,178 dscfm	2009
CD44.10	CD44.10	EP44.10.01	FM2 Elevator (EL2) to conveyor (FM2C2)	1,839,600 TPY	2009
CD44.10	CD44.10	EP44.10.02	FM2 Conveyor (FM2C2) to bin (FM2B)	1,839,600 TPY	2009
CD44.10	CD44.10	EP44.10.03	Conveyor (FM2C2) to Finish Mill 2 (FM2)	1,839,600 TPY	2009
		CD44.10	Finish Mill 2 High Zone D\C	7,416 dscfm	2009
CD44.19	CD44.19	EP44.19	Finish Mill 2 Reject Elevator High Zone	1,839,600 TPY	TBD
		CD44.19	Finish Mill 2 Reject Elevator High Zone D/C	1,500 dscfm	TBD
CD44.11	CD44.11	EP44.11.01	Finish Mill 2 (FM2) to conveyor (FM2C3)	1,839,600 TPY	2009
CD44.11	CD44.11	EP44.11.02	Bin (FM2B) to FM2 conveyor (FM2C3)	1,839,600 TPY	2009
CD44.11	CD44.11	EP44.11.03	FM2 Conveyor (FM2C3) to bucket elevator (EL2)	1,839,600 TPY	2009
		CD44.11	Finish Mill 2 Low Zone D\C	4,238 dscfm	2009
CD44.12	CD44.12	EP44.12	Finish Mill 2	1,839,600 TPY	2009
		CD44.12	Finish Mill 2 D\C	76,515 dscfm	2009
CD44.15	CD44.15	EP44.15	Finish Mill 2 conveying	1,839,600 TPY	2009
		CD44.15	Finish Mill 2 Discharge D\C	2,119 dscfm	2009
CD44.17	CD44.17	EP44.17	Finish Mills Reject Bin		2011
		CD44.17	Finish Mills Reject Bin D\C	294 dscfm	2011
EP44.16	CD44.09 CD44.12	EP44.16	Finish Mill 1/2 Air Heater	19.84 MMBtu/hr	2009
CD19.02	CD19.02	EP19.01Pb	No. 3 Finish Mill Separator (Existing FM10)	695,243 TPY	1965, 1986, 2009
		CD19.02	Finish Mill 3 Baghouse D\C	1,801 dscfm	1986, 2009
CD19.01	CD19.01	EP19.01U	FM3 Feed bins (FM3B) to feeders (FM3F)	695,243 TPY	1965, 1986, 2009
CD19.01	CD19.01	EP19.01Pa.01	FM3 Feeders (FM3F) to belt conveyor 650	695,243 TPY	1965, 1986, 2009
CD19.01	CD19.01	EP19.01Pa.02	Belt conveyor 650 to FM3	695,243 TPY	1965, 1986, 2009

[1]For 45CSR13 permitted sources, the numbering system used for the emission points, control devices, and emission units should be consistent with the numbering system used in the 45CSR13 permit. For grandfathered sources, the numbering system should be consistent with registrations or emissions inventory previously submitted to DAQ. For emission points, control devices, and emissions units which have not been previously labeled, use the following 45CSR13 numbering system: 1S, 2S, 3S,... or other appropriate description for emission units; 1C, 2C, 3C,... or other appropriate designation for control devices; 1E, 2E, 3E, ... or other appropriate designation for emission points.

ATTACHMENT D - Title V Equipment Table

(includes all emission units at the facility except those designated as insignificant activities in Section 4, Item 24 of the General Forms)

Emission Point ID[1]	Control Device[1]	Emission Unit ID[1]	Emission Unit Description	Design Capacity	Year Installed/ Modified
CD19.01	CD19.01	EP19.02	Finish Mill 3	695,243 TPY	1965, 1986, 2009
		CD19.01	Finish Mill 3 Norblo D\C	20,000 dscfm	1986, 2009
CD45.01	CD45.01	EP45.01	Finish Mill 1 airslides (FM1A)	1,839,600 TPY	2009
		CD45.01	Finish Mill 1 Airslides D\C	4,620 dscfm	2009
CD45.02	CD45.02	EP45.02	Finish Mill 2 airslides (FM2A)	1,839,600 TPY	2009
		CD45.02	Finish Mill 2 airslides D\C	4,620 dscfm	2009
CD45.03	CD45.03	EP45.03	Finish Mill 1 to cement silos (CS)	1,839,600 TPY	2009
		CD45.03	Cement Silos Feeding D\C1	3,178 dscfm	2009
CD45.04	CD45.04	EP45.04	Finish Mill 2 to cement silos (CS)	1,839,600 TPY	2009
		CD45.04	Cement Silos Feeding D\C2	3,178 dscfm	2009
CD45.05	CD45.05	EP45.05	Cement Silo A1 & A2	1,810,546 TPY	2009
		CD45.05	Cement Silo A1 & A2 D\C	5,062 dscfm	2009
CD45.06	CD45.06	EP45.06	Cement Silo B1 & B2	1,810,546 TPY	2009
		CD45.06	Cement Silo B1 & B2 D\C	5,062 dscfm	2009
CD45.07	CD45.07	EP45.07	Cement Silo C1 & C2	1,810,546 TPY	2009
		CD45.07	Cement Silo C1 & C2 D\C	5,297 dscfm	2009
CD45.08	CD45.08	EP45.08	Bulk lane loadout 1	1,810,546 TPY	2009
		CD45.08	Truck Loadout 1 D\C	3,178 dscfm	2009
CD45.09	CD45.09	EP45.09	Bulk lane loadout 2	1,810,546 TPY	2009
		CD45.09	Truck Loadout 2 D\C	2,825 dscfm	2009
CD45.10	CD45.10	EP45.10	Bulk lane loadout 3	1,810,546 TPY	2009
		CD45.10	Truck Loadout 3 D\C	2,825 dscfm	2009
CD45.11	CD45.11	EP45.11	Bulk lane loadout 4	1,810,546 TPY	2009
		CD45.11	Truck Loadout 4 D\C	3,178 dscfm	2009
CD45.14	CD45.14	EP45.14	Cement Analyzer	1,810,546 TPY	2009

[1]For 45CSR13 permitted sources, the numbering system used for the emission points, control devices, and emission units should be consistent with the numbering system used in the 45CSR13 permit. For grandfathered sources, the numbering system should be consistent with registrations or emissions inventory previously submitted to DAQ. For emission points, control devices, and emissions units which have not been previously labeled, use the following 45CSR13 numbering system: 1S, 2S, 3S,... or other appropriate description for emission units; 1C, 2C, 3C,... or other appropriate designation for control devices; 1E, 2E, 3E, ... or other appropriate designation for emission points.

ATTACHMENT D - Title V Equipment Table

(includes all emission units at the facility except those designated as insignificant activities in Section 4, Item 24 of the General Forms)

Emission Point ID[1]	Control Device[1]	Emission Unit ID[1]	Emission Unit Description	Design Capacity	Year Installed/ Modified
		CD45.14	Cement Analyzer D\C	1,471 dscfm	2009
CD45.15	CD45.15	EP45.15	Transfer Airslide at the Multi Cell	1,810,546 TPY	2010
		CD45.15	Transfer Airslide D\C at the Multi Cell	2,420 dscfm	2010
CD21.05	CD21.05	EP21.05	Middle Bank Silos 1 DC	2,514,648 TPY	2009
		CD21.05	Middle Bank Silos 1 D\C	4,560 dscfm	2009
CD21.06	CD21.06	EP21.06	Middle Bank Silos 2 DC	2,514,648 TPY	2009
		CD21.06	Middle Bank Silos 2 D\C	4,560 dscfm	2009
CD21.07	CD21.07	EP21.07	Middle Bank Silos 3 DC	2,514,648 TPY	2009
		CD21.07	Middle Bank Silos 3 D\C	4,560 dscfm	2009
CD21.08	CD21.08	EP21.08	Middle Bank Silos 4 DC	2,514,648 TPY	2009
		CD21.08	Middle Bank Silos 4 D\C	4,560 dscfm	2009
CD21.09	CD21.09	EP21.09	Middle Bank Silos 5 DC	2,514,648 TPY	2009
		CD21.09	Middle Bank Silos 5 D\C	4,560 dscfm	2009
CD21.10	CD21.10	EP21.10	Middle Bank Bin Vent 1 - Silos Inlet	2,514,648 TPY	2009
		CD21.10	Middle Bank Vent 1 D\C	1,615 dscfm	2009
CD21.11	CD21.11	EP21.11	Middle Bank Bin Vent 2 - Silos Inlet	2,514,648 TPY	2009
		CD21.11	Middle Bank Vent 2 D\C	1,615 dscfm	2009
CD21.12	CD21.12	EP21.12	Middle Bank Bin Vent 3 - Silos Discharge	2,514,648 TPY	2013
		CD21.12	Middle Bank Vent 3 D\C	350 dscfm	2013
CD21.13	CD21.13	EP21.13	Middle Bank Bin Vent 4 - Silos Discharge	2,514,648 TPY	2013
		CD21.13	Middle Bank Vent 4 D\C	350 dscfm	2013
CD22.05	CD22.05	EP22.05	West Bank Silo #70/71	2,514,648 TPY	2014
		CD22.05	West Bank Silos #70/71 D\C	7,357 dscfm	2014
CD22.06	CD22.06	EP22.06	West Bank Silo #72	2,514,648 TPY	2014
		CD22.06	West Bank Silos #72 D\C	7,357 dscfm	2014

[1]For 45CSR13 permitted sources, the numbering system used for the emission points, control devices, and emission units should be consistent with the numbering system used in the 45CSR13 permit. For grandfathered sources, the numbering system should be consistent with registrations or emissions inventory previously submitted to DAQ. For emission points, control devices, and emissions units which have not been previously labeled, use the following 45CSR13 numbering system: 1S, 2S, 3S,... or other appropriate description for emission units; 1C, 2C, 3C,... or other appropriate designation for control devices; 1E, 2E, 3E, ... or other appropriate designation for emission points.

ATTACHMENT D - Title V Equipment Table

(includes all emission units at the facility except those designated as insignificant activities in Section 4, Item 24 of the General Forms)

Emission Point ID[1]	Control Device[1]	Emission Unit ID[1]	Emission Unit Description	Design Capacity	Year Installed/ Modified
CD22.07	CD22.07	EP22.07	West Bank Silo #84	2,514,648 TPY	2014
		CD22.07	West Bank Silos #84 D\C	7,357 dscfm	2014
CD22.08	CD22.08	EP22.08	West Bank Silo Loadout Spout	2,514,648 TPY	2014
		CD22.08	West Bank Silos Loadout Spout	3,200 dscfm	2014
CD23.01	CD23.01	EP23.01	Packer #1 N.E.	251,465 TPY	1956, 1971, 1997
		CD23.01	N.E. Packer D\C	7,043 dscfm	1956, 1971, 1997
CD45.12	CD45.12	EP45.12	Bulk rail loadout 1	2,514,648 TPY	2009
		CD45.12	Rail Loadout 1 D\C	2,750 dscfm	2009
CD45.13	CD45.13	EP45.13	Bulk rail loadout 2	2,514,648 TPY	2009
		CD45.13	Rail Loadout 2 D\C	2,750 dscfm	2009
CD46.01	CD46.01	EP46.01	Truck Loadout Silo 1	1,810,546 TPY	2010
		CD46.01	Truck Loadout Silo 1 D\C	3,323 dscfm	2010
CD46.02	CD46.02	EP46.02	Truck Loadout Silo 2	1,810,546 TPY	2010
		CD46.02	Truck Loadout Silo 2 D\C	7,283 dscfm	2010
CD46.03	CD46.03	EP46.03	Truck Loadout Silo 3	1,810,546 TPY	2010
		CD46.03	Truck Loadout Silo 3 D\C	2,503 dscfm	2010
CD46.04	CD46.04	EP46.04	Truck Loadout Silo 4	1,810,546 TPY	2010
		CD46.04	Truck Loadout Silo 4 D\C	2,503 dscfm	2010
CD46.05	CD46.05	EP46.05	Truck Loadout Silo 5	1,810,546 TPY	2010
		CD46.05	Truck Loadout Silo 5 D\C	2,354 dscfm	2010
CD46.06	CD46.06	EP46.06	Bulk loadout 5 - Truck Loadout Silos	1,810,546 TPY	2010
		CD46.06	Truck Loadout 5 D\C	1,791 dscfm	2010
CD46.07	CD46.07	EP46.07	Bulk loadout 6 - Truck Loadout Silos	1,810,546 TPY	2010
		CD46.07	Truck Loadout 6 D\C	1,791 dscfm	2010
CD20.04	CD20.04	EP20.04	East Bank Silos 1	695,243 TPY	2009

[1]For 45CSR13 permitted sources, the numbering system used for the emission points, control devices, and emission units should be consistent with the numbering system used in the 45CSR13 permit. For grandfathered sources, the numbering system should be consistent with registrations or emissions inventory previously submitted to DAQ. For emission points, control devices, and emissions units which have not been previously labeled, use the following 45CSR13 numbering system: 1S, 2S, 3S,... or other appropriate description for emission units; 1C, 2C, 3C,... or other appropriate designation for control devices; 1E, 2E, 3E, ... or other appropriate designation for emission points.

ATTACHMENT D - Title V Equipment Table

(includes all emission units at the facility except those designated as insignificant activities in Section 4, Item 24 of the General Forms)

Emission Point ID[1]	Control Device[1]	Emission Unit ID[1]	Emission Unit Description	Design Capacity	Year Installed/ Modified
		CD20.04	East Bank Silos 1 D\C	3,800 dscfm	2009
CD20.05	CD20.05	EP20.05	East Bank Silos 2	695,243 TPY	2009
		CD20.05	East Bank Silos 2D\C	3,800 dscfm	2009
CD20.06	CD20.06	EP20.06	East Bank Silos 3	695,243 TPY	2009
		CD20.06	East Bank Silos 3D\C	3,800 dscfm	2009
CD48.01	CD48.01	EP48.01	Packhouse	251,465 TPY	2009
		CD48.01	Packhouse D\C	13,449 dscfm	2009
CD45.16	CD45.16	EP45.16	Rail Transloader (50-hp diesel engine-driven)	219,960 TPY	2013
		CD45.16	Rail Transloader D\C	8,200 dscfm	2013
CD31.01	CD31.01	EP31.01	Flyash Tank #1	50,293 TPY	2009
		CD31.01	Flyash Tank No.1 D\C	2,401 dscfm	2009
CD31.02	CD31.02	EP31.02	Bypass Dust Tank	50,293 TPY	2009
		CD31.02	Bypass Dust Tank D\C	2,401 dscfm	2009
CD31.03	CD31.03	EP31.03	Bypass Dust silo/loadout	50,293 TPY	2009
		CD31.03	Bypass Dust Loadout D\C	2,943 dscfm	2009
CD22.09	CD22.09	EP22.09	Dry Flyash Bin	264,552 TPY	2009
		CD22.09	Dry Flyash Bin D\C	2,750 dscfm	2009
EP0B.01		EP0B.01	Administrative Boiler 1	1.66 MMBtu/hr	2009
EP0B.02		EP0B.02	Administrative Boiler 2	1.66 MMBtu/hr	2009
EP0G.01		EP0G.01	Emergency Generator	1000kw	2009
EP0X.05		EP0X.05	Quarry Waste pile	3.1 acres	1972
EP0X.06		EP0X.06	New Crusher feed pile	2 acres	2009
EP03.01	PE	EP03.01	Storage Bays – 5 piles	1.06 acres	1966 and 1971
EP26.05	PE	EP26.05	Gypsum/synthetic gypsum storage pile (Craneway)	0.25 acre	2009
EP26.08	PE	EP26.08	Limestone Storage pile (Craneway)	0.25 acre	2009

[1]For 45CSR13 permitted sources, the numbering system used for the emission points, control devices, and emission units should be consistent with the numbering system used in the 45CSR13 permit. For grandfathered sources, the numbering system should be consistent with registrations or emissions inventory previously submitted to DAQ. For emission points, control devices, and emissions units which have not been previously labeled, use the following 45CSR13 numbering system: 1S, 2S, 3S,... or other appropriate description for emission units; 1C, 2C, 3C,... or other appropriate designation for control devices; 1E, 2E, 3E, ... or other appropriate designation for emission points.

ATTACHMENT D - Title V Equipment Table

(includes all emission units at the facility except those designated as insignificant activities in Section 4, Item 24 of the General Forms)

Emission Point ID[1]	Control Device[1]	Emission Unit ID[1]	Emission Unit Description	Design Capacity	Year Installed/ Modified
EP15.04.03	PE	EP15.04.03	Coal storage pile (Craneway)	0.25 acre	2009
EP15.04.04	PE	EP15.04.04	Petcoke Storage Pile (Craneway)	0.25 acre	2009
EP14.08	PE	EP14.08	Clinker stockpile (Craneway)	0.1 acre	2009
EP25.01	DSWS	EP25.01	Quarry Haul Roads (new crusher)	4,125,933 TPY	2009
EP25.03	DSWS	EP25.03	Quarry Haul Roads (waste)	213,841 TPY	2009
EP25.04.02	DSWS	EP25.04.02	Cement Shipments	2,062,011 TPY	2009
EP25.05.01	DSWS	EP25.05.01	Additive Trucks (unpaved)	219,076 TPY	2009
EP25.05.02	DSWS	EP25.05.02	Additive Trucks (paved)	219,076 TPY	2009
EP25.06.01	DSWS	EP25.06.01	Fuel deliveries (unpaved)	175,266 TPY	2009
EP25.06.02	DSWS	EP25.06.02	Fuel Deliveries (paved)	175,266 TPY	2009
EP25.07	DSWS	EP25.07	Waste Dust Trucks (unpaved)	90,801 TPY	2009
EP25.08	DSWS	EP25.08	Misc. Plant vehicles (unpaved)	N/A	2009
EP25.09.01	DSWS	EP25.09.01	Dry Flyash trucks (For Cement) (unpaved)	50,293 TPY	2009
EP25.09.02	DSWS	EP25.09.02	Dry Flyash trucks (For Cement) (paved)	50,293 TPY	2009
EP25.09.03	DSWS	EP25.09.03	Dry Flyash trucks (For Calciner) (unpaved)	264,552 TPY	2009
EP25.09.04	DSWS	EP25.09.04	Dry Flyash trucks (For Calciner) (paved)	264,552 TPY	2009
EP25.10.01	DSWS	EP25.10.01	Waste Dust Customer Trucks (unpaved)	35,274 TPY	2009
EP25.10.02	DSWS	EP25.10.02	Waste Dust Customer Trucks (paved)	35,274 TPY	2009
EP25.12	DSWS	EP25.12	Gypsum/Synthetic Gypsum Haul Roads (paved)	150,879 TPY	2009
EP25.14	DSWS	EP25.14	Gypsum/Synthetic Gypsum Haul Road (unpaved)	150,879 TPY	2009
EP25.16	DSWS	EP25.16	Hauling Clinker to Primary Crusher (Paved)	66,138 TPY	2015
EP25.17	DSWS	EP25.17	Hauling Clinker to Primary Crusher (Unaved)	66,138 TPY	2015
EP25.18	DSWS	EP25.18	Hauling Limestone/Clinker from Quarry to Craneway (Unpaved)	66,138 TPY	2015
EP25.19	DSWS	EP25.19	Hauling Limestone/Clinker from Quarry to Craneway (Paved)	66,138 TPY	2015
EP42.06.01	DSWS	EP42.06.01	Lime deliveries (unpaved)	77,161 TPY	2009

[1]For 45CSR13 permitted sources, the numbering system used for the emission points, control devices, and emission units should be consistent with the numbering system used in the 45CSR13 permit. For grandfathered sources, the numbering system should be consistent with registrations or emissions inventory previously submitted to DAQ. For emission points, control devices, and emissions units which have not been previously labeled, use the following 45CSR13 numbering system: 1S, 2S, 3S,... or other appropriate description for emission units; 1C, 2C, 3C,... or other appropriate designation for control devices; 1E, 2E, 3E, ... or other appropriate designation for emission points.

ATTACHMENT D - Title V Equipment Table

(includes all emission units at the facility except those designated as insignificant activities in Section 4, Item 24 of the General Forms)

Emission Point ID[1]	Control Device[1]	Emission Unit ID[1]	Emission Unit Description	Design Capacity	Year Installed/ Modified
EP42.06.02	DSWS	EP42.06.02	Lime deliveries (paved)	77,161 TPY	2009
EP50.01		Tank 56	Quarry Diesel Tank	15,000 gal	2009
EP50.02		Tank 73	Light Oil Tank	64,500 gal	2009
EP50.03		Tank 74	Grinding Aid Tank	10,600 gal	2009
EP50.04		Tank 75	Air Entrainment Tank	5,300 gal	2009
EP25.15	WS	EP25.15	Alternative Fuel Trucks (Paved)	67,593 TPY	TBD
CD42.04	CD42.04	EP41.04	Alternative Fuel Feeding System	67,593 TPY	TBD
CD42.05	CD42.04	EP41.04	Alternative Fuel Dosing System	67,593 TPY	TBD

[1]For 45CSR13 permitted sources, the numbering system used for the emission points, control devices, and emission units should be consistent with the numbering system used in the 45CSR13 permit. For grandfathered sources, the numbering system should be consistent with registrations or emissions inventory previously submitted to DAQ. For emission points, control devices, and emissions units which have not been previously labeled, use the following 45CSR13 numbering system: 1S, 2S, 3S,... or other appropriate description for emission units; 1C, 2C, 3C,... or other appropriate designation for control devices; 1E, 2E, 3E, ... or other appropriate designation for emission points.

ATTACHMENT E – EMISSION UNIT FORMS

Included in this section are Tables E-1, E-2, and E-3 which contain all information pertinent to Attachment E – Emission Unit Form. This information is provided in tabular format instead of individual forms in order to assist WV DEP in their review of the information. Applicable regulatory requirements for each emission unit are provided in the Federal and State Regulatory Analysis in Attachment I. A blank copy of Attachment E – Emission Unit Form is also included for reference.

ATTACHMENT E - Emission Unit Form

Emission Unit Description

Emission unit ID number:	**Emission unit name:**	**List any control devices associated with this emission unit:**
Provide a description of the emission unit (type, method of operation, design parameters, etc.):		
Manufacturer:	**Model number:**	**Serial number:**
Construction date: MM/DD/YYYY	**Installation date:** MM/DD/YYYY	**Modification date(s):** MM/DD/YYYY
Design Capacity (examples: furnaces - tons/hr, tanks - gallons):		
Maximum Hourly Throughput:	**Maximum Annual Throughput:**	**Maximum Operating Schedule:**

Fuel Usage Data **(fill out all applicable fields)**

Does this emission unit combust fuel? ___Yes ___ No	**If yes, is it?** ___ Indirect Fired ___Direct Fired
Maximum design heat input and/or maximum horsepower rating:	**Type and Btu/hr rating of burners:**
List the primary fuel type(s) and if applicable, the secondary fuel type(s). For each fuel type listed, provide the maximum hourly and annual fuel usage for each.	

Describe each fuel expected to be used during the term of the permit.

Fuel Type	Max. Sulfur Content	Max. Ash Content	BTU Value

Emissions Data		
Criteria Pollutants	Potential Emissions	
	PPH	TPY
Carbon Monoxide (CO)		
Nitrogen Oxides (NO_X)		
Lead (Pb)		
Particulate Matter ($PM_{2.5}$)		
Particulate Matter (PM_{10})		
Total Particulate Matter (TSP)		
Sulfur Dioxide (SO_2)		
Volatile Organic Compounds (VOC)		
Hazardous Air Pollutants	Potential Emissions	
	PPH	TPY
Regulated Pollutants other than Criteria and HAP	Potential Emissions	
	PPH	TPY

List the method(s) used to calculate the potential emissions (include dates of any stack tests conducted, versions of software used, source and dates of emission factors, etc.).

Applicable Requirements
List all applicable requirements for this emission unit. For each applicable requirement, include the underlying rule/regulation citation and/or <u>construction permit</u> with the condition number. (*Note: Title V permit condition numbers alone are not the underlying applicable requirements*). If an emission limit is calculated based on the type of source and design capacity or if a standard is based on a design parameter, this information should also be included.
____ Permit Shield
For all applicable requirements listed above, provide monitoring/testing/recordkeeping/reporting which shall be used to demonstrate compliance. If the method is based on a permit or rule, include the condition number or citation. (Note: Each requirement listed above must have an associated method of demonstrating compliance. If there is not already a required method in place, then a method must be proposed.)
Are you in compliance with all applicable requirements for this emission unit? ___Yes ___No If no, complete the **Schedule of Compliance Form** as **ATTACHMENT F**.

TABLE E-1

P=Point F=Fugitive	PSD Permit EP ID	CD Description	EU ID	EU Description	Equipment Manufacturer	Equipment Model Number	Equipment Serial Number	Construction Date	Start-Up (Installation) Date	Modification Date	Maximum Hourly Throughput	Maximum Annual Throughput	Future Potential TSP Emissions (lb/hr)	Future Potential TSP Emissions (tpy)	Future Potential PM10 Emissions (lb/hr)	Future Potential PM10 Emissions (tpy)	Future Potential PM2.5 Emissions (lb/hr)	Future Potential PM2.5 Emissions (tpy)
GROUP 1 - QUARRYING AND CRUSHING																		
F	EP0X.01		EP0X.01	Quarry drilling	See Note 1	See Note 1	See Note 1	N/A	N/A		2205	4,490,653	0.07	0.28	0.04	0.13	0.04	0.13
F	EP0X.02		EP0X.02	Quarry blasting	See Note 1	See Note 1	See Note 1	N/A	N/A		2205	4,490,653	0.07	0.28	0.04	0.13	0.04	0.13
F	EP0X.03.01		EP0X.03.01	Loader to truck (good rock)	See Note 1	See Note 1	See Note 1	N/A	N/A		3307	4,276,812	2.10	8.07	0.99	3.82	0.15	0.58
F	EP0X.03.02		EP0X.03.02	Loader to truck (waste rock)	See Note 1	See Note 1	See Note 1	N/A	N/A		3307	213,841	0.11	0.40	0.05	0.19	0.01	0.03
F	EP0X.03.03		EP0X.03.03	Truck to waste pile	See Note 1	See Note 1	See Note 1	N/A	N/A		3307	213,841	0.11	0.40	0.05	0.19	0.01	0.03
F	EP37.02.01		EP37.02.01	Truck to large bin	See Note 1	See Note 1	See Note 1	November 2005	Initial - July 1, 2009 Max Operation - October 15, 2009		1653	4,125,933	2.03	7.79	0.96	3.68	0.15	0.56
F	EP37.02.02		EP37.02.02	Large bin to conveyor	See Note 1	See Note 1	See Note 1	November 2005	Initial - July 1, 2009 Max Operation - October 15, 2009		1653	4,125,933	0.68	2.60	0.32	1.23	0.05	0.19
P	CD37.03	New Primary Crusher D\C	EP37.03.01	Conveyor to feeder	See Note 1	See Note 1	See Note 1	November 2005	Initial - July 1, 2009 Max Operation - October 15, 2009		1653	4,125,933	1.91	7.35	1.63	6.24	0.57	2.20
P			EP37.03.02	Conveyor to Hammermill	See Note 1	See Note 1	See Note 1	November 2005	Initial - July 1, 2009 Max Operation - October 15, 2009		1653	4,125,933						
P			EP37.03.03	Hammermill to feeder	Hazemag Crusher	2025	None	November 2005	Initial - July 1, 2009 Max Operation - October 15, 2009		1653	4,125,933						
P			EP37.03.04	Feeder to conveyor	See Note 1	See Note 1	See Note 1	November 2005	Initial - July 1, 2009 Max Operation - October 15, 2009		1653	4,125,933						
P	CD37.04	New Crushing System D\C1	EP37.04.01	Conveyor to split	See Note 1	See Note 1	See Note 1	November 2005	Initial - July 1, 2009 Max Operation - October 15, 2009		1653	4,125,933	0.22	0.84	0.19	0.71	0.07	0.25
P			EP37.04.02	Split to conveyor	See Note 1	See Note 1	See Note 1	November 2005	Initial - July 1, 2009 Max Operation - October 15, 2009		1653	4,125,933						
F	EP37.05		EP37.05	Split to surge pile	See Note 1	See Note 1	See Note 1	November 2005	Initial - July 1, 2009 Max Operation - October 15, 2009		1653	412,593	0.27	1.04	0.13	0.49	0.02	0.07
P	CD37.06	Premix Conveying D\C	EP37.06.01	Conveyor to split	See Note 1	See Note 1	See Note 1	November 2005	Initial - July 1, 2009 Max Operation - October 15, 2009		1653	4,125,933	0.62	2.39	0.53	2.03	0.19	0.72
P			EP37.06.02	Split to top conveyor	See Note 1	See Note 1	See Note 1	November 2005	Initial - July 1, 2009 Max Operation - October 15, 2009		1653	3,395,680						
P			EP37.06.03	Split to bottom conveyor	See Note 1	See Note 1	See Note 1	November 2005	Initial - July 1, 2009 Max Operation - October 15, 2009		1653	4,125,933						
P	CD38.01	Premix Storage Feeding D\C	EP38.01.01	Top conveyor to swing conveyor	See Note 1	See Note 1	See Note 1	November 2005	Initial - July 1, 2009 Max Operation - October 15, 2009		1653	3,395,680	0.21	0.80	0.18	0.68	0.06	0.24
P			EP38.01.02	Swing conveyor to Limestone pile	See Note 1	See Note 1	See Note 1	November 2005	Initial - July 1, 2009 Max Operation - October 15, 2009		1653	3,395,680						
F	EP37.06		EP37.06	Limestone Crusher Feed Pile (For Finish Mills)	See Note 1	See Note 1	See Note 1	2015	January 1, 2015		Not Applicable	66,138	0.03	0.13	0.01	0.06	0.01	0.06
F	EP37.07		EP37.07	Limestone Crusher Feed Pile Reclaim	See Note 1	See Note 1	See Note 1	2015	January 1, 2015		Not Applicable	66,138	0.03	0.12	0.01	0.06	0.00	0.01
F	EP37.08		EP37.08	Limestone/Clinker Storage Pile (Quarry)	See Note 1	See Note 1	See Note 1	2015	January 1, 2015		Not Applicable	132,138	0.02	0.08	0.01	0.04	0.01	0.04
F	EP37.09		EP37.09	Limestone/Clinker Reclaim from Quarry Storage Pile	See Note 1	See Note 1	See Note 1	2015	January 1, 2015		Not Applicable	132,138	0.06	0.25	0.03	0.12	0.00	0.02
F	EP37.10		EP37.10	Truck Dump to Craneway Storage Pile	See Note 1	See Note 1	See Note 1	2015	January 1, 2015		Not Applicable	132,138	0.05	0.22	0.02	0.10	0.00	0.02
F	EP37.11		EP37.11	Limestone/Clinker Storage Pile (Outside Craneway)	See Note 1	See Note 1	See Note 1	2015	Not Yet in Operation		Not Applicable	132,138	0.01	0.04	0.00	0.02	0.00	0.02
F	EP37.12		EP37.12	Limestone/Clinker Transfer to Craneway Storage Building	See Note 1	See Note 1	See Note 1	2015	Not Yet in Operation		Not Applicable	132,138	0.05	0.22	0.02	0.10	0.00	0.02
F	EP37.13		EP37.13	Clinker Transfer from Craneway to Truck	See Note 1	See Note 1	See Note 1	2015	Not Yet in Operation		Not Applicable	66,138	0.18	0.77	0.08	0.37	0.01	0.06
F	EP37.14		EP37.14	Limestone Dump to Mobile Crushers	See Note 1	See Note 1	See Note 1	2015	January 1, 2016		882	4,125,933	0.40	1.73	0.19	0.82	0.03	0.12
F	EP37.15		EP37.15	Mobile Limestone Crushers Operations	See Note 1	See Note 1	See Note 1	2015	January 1, 2016		882	4,125,933	0.35	1.54	0.27	1.20	0.22	0.98

TABLE E-1

P=Point F=Fugitive	PSD Permit EP ID	CD Description	EU ID	EU Description	Equipment Manufacturer	Equipment Model Number	Equipment Serial Number	Construction Date	Start-Up (Installation) Date	Modification Date	Maximum Hourly Throughput	Maximum Annual Throughput	Future Potential TSP Emissions (lb/hr)	Future Potential TSP Emissions (tpy)	Future Potential PM10 Emissions (lb/hr)	Future Potential PM10 Emissions (tpy)	Future Potential PM2.5 Emissions (lb/hr)	Future Potential PM2.5 Emissions (tpy)
GROUP 2 - RAW MATERIAL PREPARATION																		
P	CD38.02	Premix Storage Discharge D\C	EP38.02.01	Pile to feeder 1	See Note 1	See Note 1	See Note 1	November 2005	Sept. 14, 2009		606	3,395,680	0.21	0.80	0.18	0.68	0.06	0.24
P			EP38.02.02	Feeder 1 to bottom conveyor	See Note 1	See Note 1	See Note 1	November 2005	Sept. 14, 2009		606	3,395,680						
P			EP38.02.03	Pile to feeder 2	See Note 1	See Note 1	See Note 1	November 2005	Sept. 14, 2009		606	3,395,680						
P			EP38.02.04	Feeder 2 to bottom conveyor	See Note 1	See Note 1	See Note 1	November 2005	Sept. 14, 2009		606	3,395,680						
P	CD39.05	Additive Delivery System D\C	EP39.05	Additives truck to conveyor	See Note 1	See Note 1	See Note 1	November 2005	Sept. 05, 2009		1653	219,076	2.88	11.05	2.45	9.39	0.86	3.31
P			EP39.04.04	Conveyor to conveyor	See Note 1	See Note 1	See Note 1	November 2005	Sept. 05, 2009		1653	219,076						
F	EP40.03		EP40.03	Split to (surge)pile	See Note 1	See Note 1	See Note 1	November 2005	Sept. 14, 2009		1653	0	0.00	0.00	0.00	0.00	0.00	0.00
P	CD39.01	Additive Feeding System D\C	EP39.01.01	Conveyor to split	See Note 1	See Note 1	See Note 1	November 2005	Sept. 15, 2009		1653	949,330	0.73	2.78	0.62	2.37	0.22	0.84
P			EP39.01.02	Split to conveyor	See Note 1	See Note 1	See Note 1	November 2005	Sept. 15, 2009		1653	949,330						
P			EP39.03.02	Conveyor to shale bin	See Note 1	See Note 1	See Note 1	November 2005	Sept. 15, 2009		1653	730,254						
P			EP39.04.01	Conveyor to shale bin 2	See Note 1	See Note 1	See Note 1	November 2005	Sept. 15, 2009		1653	730,254						
P			EP39.07.01	Split to pyrite silo	See Note 1	See Note 1	See Note 1	November 2005	Sept. 15, 2009		1653	36,513						
P			EP39.08.01	Split to sand silo	See Note 1	See Note 1	See Note 1	November 2005	Sept. 15, 2009		1653	182,563						
P	CD39.02	Limestone Bin D\C	EP39.03.01	Conveyor to limestone mix bin	See Note 1	See Note 1	See Note 1	November 2005	Sept. 15, 2009		606	3,395,680	0.21	0.80	0.18	0.68	0.06	0.24
P	CD39.03	Raw Material Discharge D\C 1	EP39.03.03	Shale bin to feeder	See Note 1	See Note 1	See Note 1	November 2005	Sept. 15, 2009		114.10	730,254	0.41	1.59	0.35	1.35	0.12	0.48
P			EP39.03.04	Shale bin feeder to conveyor	See Note 1	See Note 1	See Note 1	November 2005	Sept. 15, 2009		114.10	730,254						
P			EP39.02.01	Limestone mix bin to feeder	See Note 1	See Note 1	See Note 1	November 2005	Sept. 15, 2009		530.57	3,395,680						
P			EP39.02.02	Limestone mix feeder to conveyor	See Note 1	See Note 1	See Note 1	November 2005	Sept. 15, 2009		530.57	3,395,680						
P			EP39.08.02	Sand silo to feeder	See Note 1	See Note 1	See Note 1	November 2005	Sept. 15, 2009		28.53	182,563						
P			EP39.08.03	Sand silo feeder to conveyor	See Note 1	See Note 1	See Note 1	November 2005	Sept. 15, 2009		28.53	182,563						
P			EP39.07.02	Pyrite silo to feeder	See Note 1	See Note 1	See Note 1	November 2005	Sept. 15, 2009		5.71	36,513						
P			EP39.07.03	Pyrite silo feeder to conveyor	See Note 1	See Note 1	See Note 1	November 2005	Sept. 15, 2009		5.71	36,513						
P	CD39.04	Raw Material Discharge D\C 2	EP39.04.02	Shale silo 2 to feeder	See Note 1	See Note 1	See Note 1	November 2005	Sept. 15, 2009		114.10	730,254	0.31	1.19	0.26	1.01	0.09	0.36
P			EP39.04.03	Shale silo 2 feeder to conveyor	See Note 1	See Note 1	See Note 1	November 2005	Sept. 15, 2009		114.10	730,254						
P	CD39.06	Raw Mill Feeding D\C	EP39.06.01	Raw Mill Feed Conveyor	See Note 1	See Note 1	See Note 1	November 2005	Sept. 15, 2009		570.51	3,651,268	0.21	0.80	0.18	0.68	0.06	0.24
P	CD40.01	Raw Mill High Zone D\C	EP40.01.01	RM Feed Conveyor to conveyor	See Note 1	See Note 1	See Note 1	November 2005	Sept. 15, 2009		570.51	3,651,268	0.88	3.38	0.75	2.87	0.26	1.01
P			EP40.01.02	Conveyor to split	See Note 1	See Note 1	See Note 1	November 2005	Sept. 15, 2009		570.51	3,651,268						
P			EP40.01.03	Split to hopper	See Note 1	See Note 1	See Note 1	November 2005	Sept. 15, 2009		570.51	3,651,268						
P			EP40.02.03	Elevator to conveyor	See Note 1	See Note 1	See Note 1	November 2005	Sept. 15, 2009		570.51	3,651,268						
P			EP40.04.01	Split to Raw Mill	See Note 1	See Note 1	See Note 1	November 2005	Sept. 15, 2009		570.51	3,651,268						
P	CD40.02	Raw Mill Low Zone D\C	EP40.02.01	Conveyor to split	See Note 1	See Note 1	See Note 1	November 2005	Sept. 15, 2009		570.51	3,651,268	0.73	2.78	0.62	2.37	0.22	0.84
P			EP40.02.02	Split to bucket elevator	See Note 1	See Note 1	See Note 1	November 2005	Sept. 15, 2009		570.51	3,651,268						
P			EP40.04.02	Raw Mill to conveyor	See Note 1	See Note 1	See Note 1	November 2005	Sept. 15, 2009		570.51	3,651,268						
P			EP40.02.04	Conveyor to bucket elevator	See Note 1	See Note 1	See Note 1	November 2005	Sept. 15, 2009		570.51	3,651,268						
P	CD40.05	Raw Meal Air Slide D\C	EP40.05	Raw Meal Conveying Equipment	See Note 1	See Note 1	See Note 1	November 2005	Sept. 15, 2009		570.51	3,651,268	0.47	1.80	0.40	1.53	0.14	0.54
P	CD40.06	Homo Silo Feeding D\C	EP40.06	Homogenizing Silo Feeding Equipment	See Note 1	See Note 1	See Note 1	November 2005	Sept. 15, 2009		570.51	3,651,268	0.52	1.99	0.44	1.69	0.16	0.60
P	CD40.07	Homo Silo Discharge D\C	EP40.07	Homogenizing Silo Discharging Equipment	See Note 1	See Note 1	See Note 1	November 2005	October 24, 2009		570.51	3,651,268	0.41	1.59	0.35	1.35	0.12	0.48
P	CD40.08	Top of Homo Silo D\C	EP40.08	Top of Homogenizing Silo	See Note 1	See Note 1	See Note 1	2010	2010		416.81	3,651,268	0.19	0.83	0.16	0.71	0.06	0.25
F	EP39.07.04		EP39.07.04	Inert Raw Material Hauling to Quarry (Paved)	See Note 1	See Note 1	See Note 1	2011	2011		25.17	220,460	0.02	0.09	0.00	0.02	0.00	0.00
F	EP39.07.05		EP39.07.05	Inert Raw Material Hauling to Quarry (Unpaved)	See Note 1	See Note 1	See Note 1	2011	2011		25.17	220,460	3.13	13.70	0.92	4.04	0.09	0.40
F	EP39.08		EP39.08	Inert Raw Material Truck Dump to Pile	See Note 1	See Note 1	See Note 1	2011	2011		25.17	220,460	0.02	0.10	0.01	0.05	0.00	0.01
F	EP39.09		EP39.09	Inert Raw Material Storage Pile (Within Mines)	See Note 1	See Note 1	See Note 1	2011	2011		25.17	220,460	0.04	0.17	0.02	0.08	0.02	0.08
F	EP39.10		EP39.10	Inert Raw Material Pile Reclaim	See Note 1	See Note 1	See Note 1	2011	2011		25.17	220,460	0.02	0.10	0.01	0.05	0.00	0.01
F	EP39.11		EP39.11	Inert Raw Material Dump to Primary Crusher	See Note 1	See Note 1	See Note 1	2011	2011		25.17	220,460	0.02	0.10	0.01	0.05	0.00	0.01
F	EP39.12.01		EP39.12.01	Hauling to Additives Unloading Bin (paved)	See Note 1	See Note 1	See Note 1	2011	2011		3.78	33,069	0.01	0.05	0.00	0.01	0.00	0.00
F	EP39.12.02		EP39.12.02	Hauling to Additives Unloading Bin (unpaved)	See Note 1	See Note 1	See Note 1	2011	2011		3.78	33,069	0.47	2.06	0.14	0.61	0.01	0.06
F	EP39.14		EP39.14	Additives dump to pile within Additives Storage Building	See Note 1	See Note 1	See Note 1	Not Yet Constructe	Not Yet in Operation		35.86	314,156	0.02	0.07	0.01	0.03	0.00	0.01
F	EP39.15		EP39.15	Additives Storage Building (4 piles)	See Note 1	See Note 1	See Note 1	Not Yet Constructe	Not Yet in Operation		35.86	314,156	0.04	0.15	0.02	0.08	0.02	0.08
F	EP39.16		EP39.16	Reclaim from additives piles	See Note 1	See Note 1	See Note 1	Not Yet Constructe	Not Yet in Operation		35.86	314,156	0.02	0.07	0.01	0.03	0.00	0.01

TABLE E-1

P=Point F=Fugitive	PSD Permit EP ID	CD Description	EU ID	EU Description	Equipment Manufacturer	Equipment Model Number	Equipment Serial Number	Construction Date	Start-Up (Installation) Date	Modification Date	Maximum Hourly Throughput	Maximum Annual Throughput	Future Potential TSP Emissions (lb/hr)	Future Potential TSP Emissions (tpy)	Future Potential PM10 Emissions (lb/hr)	Future Potential PM10 Emissions (tpy)	Future Potential PM2.5 Emissions (lb/hr)	Future Potential PM2.5 Emissions (tpy)
GROUP 3 - PRYOPROCESSING																		
P	CD41.04	Alternate Fuel Feeding System D/C	EP41.04	Alternate Fuel Feeding System	See Note 1	See Note 1	See Note 1	Not Yet Constructe	Not Yet in Operation		N/A	67,593	Baghouse vents to CD42.04					
P	CD41.05	Alternate Fuel Dosing System D/C	EP41.05	Alternate Fuel Dosing System	See Note 1	See Note 1	See Note 1	Not Yet Constructe	Not Yet in Operation		N/A	67,593	Baghouse vents to CD42.04					
P	CD42.02	Kiln Feeding Bucket Elevator D\C	EP42.02	Kiln Feeding Bucket Elev DC	See Note 1	See Note 1	See Note 1	November 2005	October 24, 2009		570.51	3,651,268	0.52	1.99	0.44	1.69	0.16	0.60
P	CD42.03	Kiln Feeding D\C 1	EP42.03	Kiln Feed Belt	See Note 1	See Note 1	See Note 1	November 2005	October 24, 2009		570.51	3,651,268	1.24	4.77	1.06	4.06	0.37	1.43
P	CD42.05	Kiln Feeding D\C 2	EP42.05	Kiln Feed Belt	See Note 1	See Note 1	See Note 1	November 2005	October 24, 2009		570.51	3,651,268	0.21	0.80	0.18	0.68	0.06	0.24
P	CD42.04	Inline Raw Mill / PH/PC Kiln / Clinker Cooler & Bypass & Coal Mill D\Cs	EP42.04	Kiln System - Inline Raw Mill / PH/PC Kiln / Clinker Cooler	FLS Rotax	See Note 1	See Note 1	November 2005	October 24, 2009		345.76	2,212,890	69.80	268.05	58.64	225.16	31.41	120.62
P			EP42.08	Kiln Bypass Baghouse DC	Redecam	See Note 1	See Note 1	November 2005	February 20, 2010		Not Applicable	Not Applicable						
P			EP41.03.01	Coal Mill	Loesche	See Note 1	See Note 1	November 2005	October 4, 2009		45.64	292,110						
P	CD42.01	Kiln Fringe Bin D\C	EP42.01	Cement Fringe Bin	See Note 1	See Note 1	See Note 1	November 2005	May 15, 2010		27.56	176,368	0.75	2.88	0.64	2.45	0.22	0.86
P	CD42.06	Lime Storage D\C	EP42.06	Lime Storage for Scrubber System	See Note 1	See Note 1	See Note 1	November 2005	December 1, 2009		12.06	77,161	0.10	0.38	0.08	0.32	0.03	0.11
P	CD42.07	Bypass Truck Spout Dedusting	EP42.07	Bypass Truck Spout Dedusting	See Note 1	See Note 1	See Note 1	November 2005	February 20, 2010		Not Applicable	Not Applicable	0.03	0.11	0.02	0.09	0.01	0.03
GROUP 4 - CLINKER HANDLING AND STORAGE																		
P	CD43.03	Clinker Storage Feeding D\C	EP43.05	Clinker conveyor to big clinker silo	See Note 1	See Note 1	See Note 1	November 2005	October 24, 2009		345.76	2,212,890	0.52	1.99	0.44	1.69	0.16	0.60
P	CD43.19	Top of LA Clinker Silo DC	EP43.19	Top of LA Clinker Silo	See Note 1	See Note 1	See Note 1	Not Yet Constructe	Not Yet in Operation		345.76	2,212,890	0.64	2.44	0.54	2.07	0.19	0.73
P	CD43.20	Normal Clinker Bin at Pan Conveyor 73 DC	EP43.20	Normal Clinker Bin at Pan Conveyor 73	See Note 1	See Note 1	See Note 1	2013	March 2013		345.76	2,212,890	0.93	3.57	0.79	3.03	0.28	1.07
P	CD43.21	Top of Normal Clinker Silo DC	EP43.21	Top of Normal Clinker Silo	See Note 1	See Note 1	See Note 1	2013	November 2013		345.76	2,212,890	0.78	3.00	0.66	2.55	0.23	0.90
P	CD43.04	Small Clinker Storage Feeding D\C	EP43.04	Clinker conveyor to clinker silo	See Note 1	See Note 1	See Note 1	November 2005	October 24, 2009		345.76	2,212,890	0.31	1.19	0.26	1.01	0.09	0.36
P	CD43.06	Small Clinker Storage Discharge D\C	EP43.06.01	Low Alkali Clinker Silo to upper conveyors	See Note 1	See Note 1	See Note 1	November 2005	November 15, 2009		345.76	2,212,890	0.02	0.08	0.02	0.07	0.01	0.02
P			EP43.06.02	Upper conveyors to lower conveyor	See Note 1	See Note 1	See Note 1	November 2005	November 15, 2009		345.76	2,212,890						
P			EP43.06.03	Low Alkali Clinker silo to lower conveyor	See Note 1	See Note 1	See Note 1	November 2005	November 15, 2009		345.76	2,212,890						
P	CD43.07	Clinker Storage Discharge D\C	EP43.07.01	Big clinker silo to upper conveyor1	See Note 1	See Note 1	See Note 1	November 2005	November 15, 2009		345.76	2,212,890	0.02	0.08	0.02	0.07	0.01	0.02
P			EP43.07.02	Big clinker silo to upper conveyor2	See Note 1	See Note 1	See Note 1	November 2005	November 15, 2009		345.76	2,212,890						
P			EP43.07.03	Big clinker silo to lower conveyor	See Note 1	See Note 1	See Note 1	November 2005	November 15, 2009		345.76	2,212,890						
P			EP43.07.04	Big clinker silo to short conveyor	See Note 1	See Note 1	See Note 1	November 2005	November 15, 2009		345.76	2,212,890						
P			EP43.07.05	Short conveyor to lower conveyor	See Note 1	See Note 1	See Note 1	November 2005	November 15, 2009		345.76	2,212,890						
P	CD43.08	Finish Mill Conveying D\C1	EP43.08	Upper conveyor 1 to FM feed hoppers belt	See Note 1	See Note 1	See Note 1	November 2005	November 15, 2009		345.76	2,212,890	0.02	0.08	0.02	0.07	0.01	0.02
P	CD43.09	Finish Mill Conveying D\C2	EP43.09	Lower conveyor to FM feed hoppers belt	See Note 1	See Note 1	See Note 1	November 2005	November 15, 2009		345.76	2,212,890	0.02	0.08	0.02	0.07	0.01	0.02
P	CD43.13	Finish Mill Conveying D\C3	EP43.13	Upper conveyor 2 to FM feed hoppers belt	See Note 1	See Note 1	See Note 1	November 2005	November 15, 2009		345.76	2,212,890	0.02	0.08	0.02	0.07	0.01	0.02
GROUP 5 - FUEL HANDLING																		
F	EP15.01.01		EP15.01.01	Rail unloading to petcoke hopper	See Note 1	See Note 1	See Note 1	N/A	1966	Sept. 20, 2009	18.26	116,844	0.00	0.01	0.00	0.01	0.00	0.00
F	EP15.01.02		EP15.01.02	Petcoke hopper to feeders	See Note 1	See Note 1	See Note 1	N/A	1966	Sept. 20, 2009	18.26	116,844	0.00	0.00	0.00	0.00	0.00	0.00
F	EP41.01.01		EP41.01.01	Petcoke feeders to conveyor	See Note 1	See Note 1	See Note 1	November 2005	Sept. 20, 2009		18.26	116,844	0.00	0.01	0.00	0.00	0.00	0.00
F	EP41.01.02		EP41.01.02	Petcoke Conveyor to split to conveyor	See Note 1	See Note 1	See Note 1	November 2005	Sept. 20, 2009		18.26	116,844	0.00	0.01	0.00	0.00	0.00	0.00
F	EP41.01.03		EP41.01.03	Petcoke Conveyor to CSH fuel bins or pile	See Note 1	See Note 1	See Note 1	November 2005	Sept. 20, 2009		18.26	116,844	0.00	0.01	0.00	0.00	0.00	0.00
F	EP41.01.04		EP41.01.04	Coal Truck unloading to storage hall	See Note 1	See Note 1	See Note 1	November 2005	Sept. 20, 2009		27.39	175,266	0.01	0.03	0.00	0.01	0.00	0.00
F	EP41.01.05		EP41.01.05	Clam bucket to coal pile	See Note 1	See Note 1	See Note 1	November 2005	Sept. 20, 2009		27.39	175,266	0.01	0.03	0.00	0.01	0.00	0.00
F	EP41.01.06		EP41.01.06	Pile to clam bucket	See Note 1	See Note 1	See Note 1	November 2005	Sept. 20, 2009		45.64	292,110	0.01	0.05	0.01	0.02	0.00	0.00
F	EP41.01.07		EP41.01.07	Clam bucket to CSH fuel bins	See Note 1	See Note 1	See Note 1	November 2005	Sept. 20, 2009		45.64	292,110	0.01	0.05	0.01	0.02	0.00	0.00
F	EP41.02.01		EP41.02.01	CSH fuel bins to feeders	See Note 1	See Note 1	See Note 1	November 2005	Sept. 20, 2009		45.64	292,110	0.01	0.04	0.00	0.02	0.00	0.00
F	EP41.02.02		EP41.02.02	Feeders to conveyor	See Note 1	See Note 1	See Note 1	November 2005	Sept. 20, 2009		45.64	292,110	0.02	0.08	0.01	0.04	0.00	0.01
F	EP41.02.03		EP41.02.03	Conveyor to split to conveyor	See Note 1	See Note 1	See Note 1	November 2005	Sept. 20, 2009		45.64	292,110	0.02	0.08	0.01	0.04	0.00	0.01
P	CD42.04		EP41.02.04	Conveyor to Coal Mill	See Note 1	See Note 1	See Note 1	November 2005	Sept. 20, 2009		45.64	292,110	CD42.04	CD42.04	CD42.04	CD42.04	CD42.04	CD42.04

TABLE E-1

P=Point F=Fugitive	PSD Permit EP ID	CD Description	EU ID	EU Description	Equipment Manufacturer	Equipment Model Number	Equipment Serial Number	Construction Date	Start-Up (Installation) Date	Modification Date	Maximum Hourly Throughput	Maximum Annual Throughput	Future Potential TSP Emissions (lb/hr)	Future Potential TSP Emissions (tpy)	Future Potential PM10 Emissions (lb/hr)	Future Potential PM10 Emissions (tpy)	Future Potential PM2.5 Emissions (lb/hr)	Future Potential PM2.5 Emissions (tpy)
GROUP 6 - CEMENT PRODUCTION																		
P	CD43.14	Finish Mill 1 & 2 Hoppers D\C	EP43.14	Conveyor to clinker feeding hoppers (FM1 &2)	See Note 1	See Note 1	See Note 1	November 2005	November 13, 2009		345.76	2,212,890	0.52	1.99	0.44	1.69	0.16	0.60
			EP43.15	Conveyor to lower conveyor (FM3)	See Note 1	See Note 1	See Note 1	November 2005	November 13, 2009		345.76	2,212,890						
P	CD43.16	Finish Mill 3 Hopper D\C	EP43.16	Lower conveyor to clinker feeding hopper (FM3)	See Note 1	See Note 1	See Note 1	November 2005	November 13, 2009		345.76	2,212,890	0.52	1.99	0.44	1.69	0.16	0.60
P	CD43.17	Normal Clinker Bin - Bin Vent	EP43.17	Normal Clinker Bin - Bin Vent	See Note 1	See Note 1	See Note 1	June 2010	June 2010		345.76	2,212,890	0.27	1.05	0.23	0.89	0.08	0.31
F	EP26.06.03		EP26.06.03	Gypsum/Synthetic Gypsum truck unloading to storage hall	See Note 1	See Note 1	See Note 1	November 2005	November 13, 2009		23.57	150,879	0.02	0.07	0.01	0.03	0.00	0.01
F	EP26.06.04		EP26.06.04	Clam bucket to gypsum/synthetic gypsum pile	See Note 1	See Note 1	See Note 1	November 2005	November 13, 2009		23.57	150,879	0.01	0.02	0.00	0.01	0.00	0.00
F	EP26.06.05		EP26.06.05	Gypsum/synthetic gypsum pile to clam bucket	See Note 1	See Note 1	See Note 1	November 2005	November 13, 2009		23.57	150,879	0.01	0.02	0.00	0.01	0.00	0.00
F	EP26.06.06		EP26.06.06	Clam bucket to gypsum/synthetic gypsum bin (FM1/2/3)	See Note 1	See Note 1	See Note 1	November 2005	November 13, 2009		23.57	150,879	0.01	0.02	0.00	0.01	0.00	0.00
F	EP26.07.01		EP26.07.01	Limestone Pile to clam bucket	See Note 1	See Note 1	See Note 1	November 2005	November 13, 2009		23.57	150,879	0.03	0.11	0.01	0.05	0.00	0.01
F	EP26.07.02		EP26.07.02	Clam bucket to limestone bin (FM1/2/3)	See Note 1	See Note 1	See Note 1	November 2005	November 13, 2009		23.57	150,879	0.03	0.11	0.01	0.05	0.00	0.01
F	EP27.01		EP27.01	Conveyor to clinker hopper	See Note 1	See Note 1	See Note 1	November 2005	November 13, 2009		3.91	25,000	0.57	2.21	0.27	1.04	0.04	0.16
F	EP27.02		EP27.02	Clinker hopper to crane	See Note 1	See Note 1	See Note 1	November 2005	November 13, 2009		3.91	25,000	0.57	2.21	0.27	1.04	0.04	0.16
F	EP27.03		EP27.03	Crane to clinker pile	See Note 1	See Note 1	See Note 1	November 2005	November 13, 2009		3.91	25,000	0.57	2.21	0.27	1.04	0.04	0.16
F	EP27.04		EP27.04	Clinker pile to crane	See Note 1	See Note 1	See Note 1	November 2005	November 13, 2009		3.91	25,000	0.57	2.21	0.27	1.04	0.04	0.16
F	EP27.05		EP27.05	Crane to clinker bins (FM1/2/3)	See Note 1	See Note 1	See Note 1	November 2005	November 13, 2009		3.91	25,000	0.57	2.21	0.27	1.04	0.04	0.16
F	EP27.06		EP27.06	Transfer to Outdoor Clinker Storage Pile	See Note 1	See Note 1	See Note 1	January 2015	January 2015		8.61	55,115	0.15	0.65	0.07	0.31	0.01	0.05
F	EP27.07		EP27.07	Outdoor Clinker Storage Pile - Tarped	See Note 1	See Note 1	See Note 1	January 2015	January 2015		8.61	55,115	0.17	0.76	0.09	0.38	0.09	0.38
F	EP27.08		EP27.08	Outdoor Clinker Storage Pile Reclaim	See Note 1	See Note 1	See Note 1	January 2015	January 2015		8.61	55,115	0.15	0.65	0.07	0.31	0.01	0.05
P	CD44.01	Finish Mill 2 Feeding D\C1	EP44.01	L.A. clinker bin to FM2 conveyor	See Note 1	See Note 1	See Note 1	November 2005	December 16, 2009		345.76	2,212,890	0.31	1.19	0.26	1.01	0.09	0.36
P	CD44.02	Finish Mill 1 Feeding D\C1	EP44.02	Clinker bin to FM1 conveyor	See Note 1	See Note 1	See Note 1	November 2005	November 13, 2009		345.76	2,212,890	0.31	1.19	0.26	1.01	0.09	0.36
P	CD44.03	Finish Mill 2 Feeding D\C2	EP44.03	Clinker bin to FM2 conveyor	See Note 1	See Note 1	See Note 1	November 2005	December 16, 2009		345.76	2,212,890	0.21	0.80	0.18	0.68	0.06	0.24
P	CD44.04	Finish Mill 2 Feeding D\C3	EP44.04.01	Limestone bin to FM2 conveyor	See Note 1	See Note 1	See Note 1	November 2005	December 16, 2009		23.57	150,879	0.31	1.19	0.26	1.01	0.09	0.36
P			EP44.04.02	Gypsum/synthetic gypsum bin to FM2 conveyor	See Note 1	See Note 1	See Note 1	November 2005	December 16, 2009		23.57	150,879						
P	CD44.05	Finish Mill 1 Feeding D\C 2	EP44.05.01	Limestone bin to FM1 conveyor	See Note 1	See Note 1	See Note 1	November 2005	November 13, 2009		23.57	150,879	0.31	1.19	0.26	1.01	0.09	0.36
P			EP44.05.02	Gypsum/synthetic gypsum bin to FM1 conveyor	See Note 1	See Note 1	See Note 1	November 2005	November 13, 2009		23.57	150,879						
P	CD19.02	Finish Mill 3 Baghouse D\C	EP19.01Pb	No. 3 Finish Mill Separator (Existing FM 10)	See Note 1	See Note 1	See Note 1	N/A	1965	1986	108.63	695,243	12.08	46.40	10.27	39.44	3.63	13.92
P	CD19.01	Finish Mill 3 Norblo D\C	EP19.01U	FM3 Feed bins to feeders	See Note 1	See Note 1	See Note 1	N/A	1965	February 1, 2010	108.63	695,243	3.91	15.02	3.32	12.76	1.17	4.51
P			EP19.01Pa.01	FM3 Feeders to belt conveyor 650	See Note 1	See Note 1	See Note 1	N/A	1965	February 1, 2010	108.63	695,243						
P			EP19.01Pa.02	Belt conveyor 650 to FM3	See Note 1	See Note 1	See Note 1	N/A	1965	February 1, 2010	108.63	695,243						
P			EP19.02	Finish Mill 3	See Note 1	See Note 1	See Note 1	N/A	1965	February 2, 2010	108.63	695,243						
P	CD44.06	Finish Mill 1 Conveying D\C	EP44.06	FM1 Conveyor to conveyor	See Note 1	See Note 1	See Note 1	November 2005	November 13, 2009		287.44	1,839,600	0.31	1.19	0.26	1.01	0.09	0.36
P	CD44.07	Finish Mill 1 High Zone D\C	EP44.07.01	Elevator to FM1 conveyor	See Note 1	See Note 1	See Note 1	November 2005	November 13, 2009		287.44	1,839,600	0.73	2.78	0.62	2.37	0.22	0.84
P			EP44.07.02	FM1 Conveyor to bin	See Note 1	See Note 1	See Note 1	November 2005	November 13, 2009		287.44	1,839,600						
P			EP44.07.03	Conveyor to Finish Mill 1	See Note 1	See Note 1	See Note 1	November 2005	November 13, 2009		287.44	1,839,600						
P	CD44.08	Finish Mill 1 Low Zone D\C	EP44.08.01	Finish Mill 1 to Conveyor	See Note 1	See Note 1	See Note 1	November 2005	November 13, 2009		287.44	1,839,600	0.41	1.59	0.35	1.35	0.12	0.48
P			EP44.08.02	Bin to FM1 conveyor	See Note 1	See Note 1	See Note 1	November 2005	November 13, 2009		287.44	1,839,600						
P			EP44.08.03	FM1 Conveyor to bucket elevator	See Note 1	See Note 1	See Note 1	November 2005	November 13, 2009		287.44	1,839,600						
P	CD44.09	Finish Mill 1 D\C	EP44.09	Finish Mill 1	Loesche	53.3+3	None	November 2005	November 13, 2009		287.44	1,839,600	7.48	28.73	6.36	24.42	2.24	8.62
P	CD44.13	Finish Mill 1 Discharge D\C	EP44.13	Finish Mill 1 Conveying	See Note 1	See Note 1	See Note 1	November 2005	November 13, 2009		287.44	1,839,600	0.21	0.80	0.18	0.68	0.06	0.24
P	CD44.14	Finish Mill 2 Conveying D\C	EP44.14	FM2 Conveyor to conveyor	See Note 1	See Note 1	See Note 1	November 2005	December 16, 2009		287.44	1,839,600	0.31	1.19	0.26	1.01	0.09	0.36
P	CD44.10	Finish Mill 2 High Zone D\C	EP44.10.01	FM2 Elevator to conveyor	See Note 1	See Note 1	See Note 1	November 2005	December 16, 2009		287.44	1,839,600	0.73	2.78	0.62	2.37	0.22	0.84
P			EP44.10.02	FM2 Conveyor to bin	See Note 1	See Note 1	See Note 1	November 2005	December 16, 2009		287.44	1,839,600						
P			EP44.10.03	Conveyor to Finish Mill 2	See Note 1	See Note 1	See Note 1	November 2005	December 16, 2009		287.44	1,839,600						
P	CD44.11	Finish Mill 2 Low Zone D\C	EP44.11.01	Finish Mill 2 to conveyor	See Note 1	See Note 1	See Note 1	November 2005	December 16, 2009		287.44	1,839,600	0.41	1.59	0.35	1.35	0.12	0.48
P			EP44.11.02	Bin to FM2 conveyor	See Note 1	See Note 1	See Note 1	November 2005	December 16, 2009		287.44	1,839,600						
P			EP44.11.03	FM2 Conveyor to bucket elevator	See Note 1	See Note 1	See Note 1	November 2005	December 16, 2009		287.44	1,839,600						
P	CD44.12	Finish Mill 2 D\C	EP44.12	Finish Mill 2	Loesche	53.3+3	None	November 2005	December 16, 2009		287.44	1,839,600	7.48	28.73	6.36	24.42	2.24	8.62
P	CD44.15	Finish Mill 2 Discharge D\C	EP44.15	Finish Mill 2 Conveying	See Note 1	See Note 1	See Note 1	November 2005	December 16, 2009		287.44	1,839,600	0.21	0.80	0.18	0.68	0.06	0.24
P	EP44.16	Finish Mill 1/2 Air Heater	EP44.16	Finish Mill 1/2 Air Heater	See Note 1	See Note 1	See Note 1	November 2005	November 13, 2009		141.73	1,241,518	CD44.09 CD44.12	CD44.09 CD44.12	CD44.09 CD44.12	CD44.09 CD44.12	CD44.09 CD44.12	CD44.09 CD44.12
P	CD44.17	Finish Mills Reject Bin	EP44.17	Finish Mills Reject Bin	See Note 1	See Note 1	See Note 1	March 2011	March 2011		N/A	N/A	0.03	0.11	0.02	0.09	0.01	0.03
P	CD44.18	Finish Mill 1 Reject Elevator High Zone DC	EP44.18	Finish Mill 1 Reject Elevator High Zone	See Note 1	See Note 1	See Note 1	Not Yet Constructe	Not Yet in Operation		N/A	N/A	0.15	0.56	0.12	0.48	0.04	0.17
P	CD44.19	Finish Mill 2 Reject Elevator High Zone DC	EP44.19	Finish Mill 2 Reject Elevator High Zone	See Note 1	See Note 1	See Note 1	Not Yet Constructe	Not Yet in Operation		N/A	N/A	0.15	0.56	0.12	0.48	0.04	0.17

TABLE E-1

P=Point F=Fugitive	PSD Permit EP ID	CD Description	EU ID	EU Description	Equipment Manufacturer	Equipment Model Number	Equipment Serial Number	Construction Date	Start-Up (Installation) Date	Modification Date	Maximum Hourly Throughput	Maximum Annual Throughput	Future Potential TSP Emissions (lb/hr)	Future Potential TSP Emissions (tpy)	Future Potential PM10 Emissions (lb/hr)	Future Potential PM10 Emissions (tpy)	Future Potential PM2.5 Emissions (lb/hr)	Future Potential PM2.5 Emissions (tpy)
GROUP 7 - SHIPPING																		
P	CD45.01	Finish Mill 1 Airslides D\C	EP45.01	Finish Mill 1 airslides	See Note 1	See Note 1	See Note 1	November 2005	November 13, 2009		287.44	1,839,600	0.45	1.73	0.38	1.47	0.14	0.52
P	CD45.02	Finish Mill 2 Airslides D\C	EP45.02	Finish Mill 2 airslides	See Note 1	See Note 1	See Note 1	November 2005	November 13, 2009		287.44	1,839,600	0.45	1.73	0.38	1.47	0.14	0.52
P	CD45.03	Cement Silos Feeding D\C1	EP45.03	Finish Mill 1 to cement silos	See Note 1	See Note 1	See Note 1	November 2005	November 13, 2009		287.44	1,839,600	0.31	1.19	0.26	1.01	0.09	0.36
P	CD45.04	Cement Silos Feeding D\C2	EP45.04	Finish Mill 2 to cement silos	See Note 1	See Note 1	See Note 1	November 2005	November 13, 2009		287.44	1,839,600	0.31	1.19	0.26	1.01	0.09	0.36
P	CD45.05	Cement Silo A1 & A2 D\C	EP45.05	Cement Silo A1 & A2	See Note 1	See Note 1	See Note 1	November 2005	November 13, 2009		282.90	1,810,546	0.49	1.90	0.42	1.62	0.15	0.57
P	CD45.06	Cement Silo B1 & B2 D\C	EP45.06	Cement Silo B1 & B2	See Note 1	See Note 1	See Note 1	November 2005	November 13, 2009		282.90	1,810,546	0.49	1.90	0.42	1.62	0.15	0.57
P	CD45.07	Cement Silo C1 & C2 D\C	EP45.07	Cement Silo C1 & C2	See Note 1	See Note 1	See Note 1	November 2005	November 13, 2009		282.90	1,810,546	0.52	1.99	0.44	1.69	0.16	0.60
P	CD45.08	Truck Loadout 1 D\C	EP45.08	Bulk lane loadout 1	See Note 1	See Note 1	See Note 1	November 2005	December 15, 2009		282.90	1,810,546	0.31	1.19	0.26	1.01	0.09	0.36
P	CD45.09	Truck Loadout 2 D\C	EP45.09	Bulk lane loadout 2	See Note 1	See Note 1	See Note 1	November 2005	December 15, 2009		282.90	1,810,546	0.28	1.06	0.23	0.90	0.08	0.32
P	CD45.10	Truck Loadout 3 D\C	EP45.10	Bulk lane loadout 3	See Note 1	See Note 1	See Note 1	November 2005	December 15, 2009		282.90	1,810,546	0.28	1.06	0.23	0.90	0.08	0.32
P	CD45.11	Truck Loadout 4 D\C	EP45.11	Bulk lane loadout 4	See Note 1	See Note 1	See Note 1	November 2005	December 15, 2009		282.90	1,810,546	0.31	1.19	0.26	1.01	0.09	0.36
P	CD45.14	Cement Analyzer D\C	EP45.14	Cement Analyzer	See Note 1	See Note 1	See Note 1	November 2005	June 21, 2010		282.90	1,810,546	0.14	0.55	0.12	0.47	0.04	0.17
P	CD45.15	Transfer Airslide D\C at the Multi Cell	EP45.15	Transfer Airslide at the Multi Cell	See Note 1	See Note 1	See Note 1	2010	2010		206.68	1,810,546	0.24	0.91	0.20	0.77	0.07	0.27
P	CD45.16	Rail Transloader D\C	EP45.16	Rail Transloader	See Note 1	See Note 1	See Note 1	2013	June 1, 2013		60.43	219,960	1.41	2.87	1.20	2.49	0.42	1.08
P	CD21.05	Middle Bank Silos 1 D\C	EP21.05	Middle Bank Silos 1 DC	See Note 1	See Note 1	See Note 1	November 2005	August 9, 2009		392.91	2,514,648	0.45	1.71	0.38	1.46	0.13	0.51
P	CD21.06	Middle Bank Silos 2 D\C	EP21.06	Middle Bank Silos 2 DC	See Note 1	See Note 1	See Note 1	November 2005	August 9, 2009		392.91	2,514,648	0.45	1.71	0.38	1.46	0.13	0.51
P	CD21.07	Middle Bank Silos 3 D\C	EP21.07	Middle Bank Silos 3 DC	See Note 1	See Note 1	See Note 1	November 2005	August 9, 2009		392.91	2,514,648	0.45	1.71	0.38	1.46	0.13	0.51
P	CD21.08	Middle Bank Silos 4 D\C	EP21.08	Middle Bank Silos 4 DC	See Note 1	See Note 1	See Note 1	November 2005	August 9, 2009		392.91	2,514,648	0.45	1.71	0.38	1.46	0.13	0.51
P	CD21.09	Middle Bank Silos 5 D\C	EP21.09	Middle Bank Silos 5 DC	See Note 1	See Note 1	See Note 1	November 2005	August 9, 2009		392.91	2,514,648	0.45	1.71	0.38	1.46	0.13	0.51
P	CD21.10	Middle Bank Vent 1 D\C	EP21.10	Middle Bank Bin Vent 1 - Silos Inlet	See Note 1	See Note 1	See Note 1	November 2005	August 9, 2009		392.91	2,514,648	0.16	0.61	0.13	0.52	0.05	0.18
P	CD21.11	Middle Bank Vent 2 D\C	EP21.11	Middle Bank Bin Vent 2 - Silos Inlet	See Note 1	See Note 1	See Note 1	November 2005	August 9, 2009		392.91	2,514,648	0.16	0.61	0.13	0.52	0.05	0.18
P	CD21.12	Middle Bank Vent 3 D\C	EP21.12	Middle Bank Bin Vent 3 - Silos Discharge	See Note 1	See Note 1	See Note 1	November 2005	August 9, 2009		392.91	2,514,648	0.03	0.13	0.03	0.11	0.01	0.04
P	CD21.13	Middle Bank Vent 4 D\C	EP21.13	Middle Bank Bin Vent 4 - Silos Discharge	See Note 1	See Note 1	See Note 1	November 2005	August 9, 2009		392.91	2,514,648	0.03	0.13	0.03	0.11	0.01	0.04
P	CD45.12	Rail Loadout 1 D\C	EP45.12	Bulk rail loadout 1	See Note 1	See Note 1	See Note 1	November 2005	March 30, 2010		392.91	2,514,648	0.27	1.03	0.23	0.88	0.08	0.31
P	CD45.13	Rail Loadout 2 D\C	EP45.13	Bulk rail loadout 2	See Note 1	See Note 1	See Note 1	November 2005	March 30, 2010		392.91	2,514,648	0.27	1.03	0.23	0.88	0.08	0.31
P	CD46.01	Truck Loadout Silo 1 D\C	EP46.01	Truck Loadout Silo 1	See Note 1	See Note 1	See Note 1	2010	2010		282.90	1,810,546	0.32	1.25	0.28	1.06	0.10	0.37
P	CD46.02	Truck Loadout Silo 2 D\C	EP46.02	Truck Loadout Silo 2	See Note 1	See Note 1	See Note 1	2010	2010		282.90	1,810,546	1.42	5.47	1.21	4.65	0.43	1.64
P	CD46.03	Truck Loadout Silo 3 D\C	EP46.03	Truck Loadout Silo 3	See Note 1	See Note 1	See Note 1	2010	2010		282.90	1,810,546	0.24	0.94	0.21	0.80	0.07	0.28
P	CD46.04	Truck Loadout Silo 4 D\C	EP46.04	Truck Loadout Silo 4	See Note 1	See Note 1	See Note 1	2010	2010		282.90	1,810,546	0.24	0.94	0.21	0.80	0.07	0.28
P	CD46.05	Truck Loadout Silo 5 D\C	EP46.05	Truck Loadout Silo 5	See Note 1	See Note 1	See Note 1	2010	2010		282.90	1,810,546	0.23	0.88	0.20	0.75	0.07	0.27
P	CD46.06	Truck Loadout 5 D\C	EP46.06	Bulk loadout 5 - Truck Loadout Silos	See Note 1	See Note 1	See Note 1	2010	2010		282.90	1,810,546	0.35	1.34	0.30	1.14	0.11	0.40
P	CD46.07	Truck Loadout 6 D\C	EP46.07	Bulk loadout 6 - Truck Loadout Silos	See Note 1	See Note 1	See Note 1	2010	2010		282.90	1,810,546	0.35	1.34	0.30	1.14	0.11	0.40
P	CD20.04	East Bank Silos 1 D\C	EP20.04	East Bank Silos 1	See Note 1	See Note 1	See Note 1	November 2005	August 28, 2009		108.63	695,243	0.37	1.43	0.32	1.21	0.11	0.43
P	CD20.05	East Bank Silos 2 D\C	EP20.05	East Bank Silos 2	See Note 1	See Note 1	See Note 1	November 2005	August 28, 2009		108.63	695,243	0.37	1.43	0.32	1.21	0.11	0.43
P	CD20.06	East Bank Silos 3 D\C	EP20.06	East Bank Silos 3	See Note 1	See Note 1	See Note 1	November 2005	August 28, 2009		108.63	695,243	0.37	1.43	0.32	1.21	0.11	0.43
P	CD48.01	Packhouse D\C	EP48.01	Packhouse	See Note 1	See Note 1	See Note 1	November 2005	May 10, 2009		39.29	251,465	1.31	5.05	1.12	4.29	0.39	1.51
P	CD23.01	N.E. PACKER D/C	EP23.01	Packer #1 N.E.	See Note 1	See Note 1	See Note 1	1956	1956	1971, 1997	N/A	N/A	1.38	5.29	1.17	4.50	0.41	1.59
P	CD22.05	West Bank Silo #70/71 D\C	EP22.05	West Bank Silo #70/71	See Note 1	See Note 1	See Note 1	2014	December 1, 2014		41.34	264,552	0.72	2.76	0.61	2.35	0.22	0.83
P	CD22.06	West Bank Silo #72 D\C	EP22.06	West Bank Silo #72	See Note 1	See Note 1	See Note 1	2014	December 1, 2014		41.34	264,552	0.72	2.76	0.61	2.35	0.22	0.83
P	CD22.07	West Bank Silo #84 D\C	EP22.07	West Bank Silo #84	See Note 1	See Note 1	See Note 1	2014	December 1, 2014		41.34	264,552	0.72	2.76	0.61	2.35	0.22	0.83
P	CD22.08	West Bank Silos Loadout Sp	EP22.08	West Bank Silos Loadout Spout	See Note 1	See Note 1	See Note 1	2014	December 1, 2014		41.34	264,552	0.31	1.20	0.27	1.02	0.09	0.36

TABLE E-1

P=Point F=Fugitive	PSD Permit EP ID	CD Description	EU ID	EU Description	Equipment Manufacturer	Equipment Model Number	Equipment Serial Number	Construction Date	Start-Up (Installation) Date	Modification Date	Maximum Hourly Throughput	Maximum Annual Throughput	Future Potential TSP Emissions (lb/hr)	Future Potential TSP Emissions (tpy)	Future Potential PM10 Emissions (lb/hr)	Future Potential PM10 Emissions (tpy)	Future Potential PM2.5 Emissions (lb/hr)	Future Potential PM2.5 Emissions (tpy)
GROUP 8 - MISCELLANEOUS																		
P	CD31.01	Flyash Tank No.1 D\C	EP31.01	Fly Ash Tank #1	See Note 1	See Note 1	See Note 1	N/A	1995	February 28, 2010	7.86	50,293	0.23	0.90	0.20	0.77	0.07	0.27
P	CD31.02	Bypass Dust Tank D\C	EP31.02	Bypass Dust Tank	See Note 1	See Note 1	See Note 1	N/A	1995		7.86	50,293	0.23	0.90	0.20	0.77	0.07	0.27
P	CD31.03	Bypass Dust Loadout D\C	EP31.03	Bypass Dust silo/loadout	See Note 1	See Note 1	See Note 1	N/A	1995		7.86	50,293	0.29	1.10	0.24	0.94	0.09	0.33
P	CD22.09	Dry Flyash Bin D\C	EP22.09	Dry Flyash Bin	See Note 1	See Note 1	See Note 1	2009	2009		41.34	264,552	0.27	1.03	0.23	0.88	0.08	0.31
P	EP0B.01	Administrative Boiler 1	EP0B.01	Administrative Boiler 1	See Note 1	See Note 1	See Note 1	November 2005	October 1, 2009		18.14	158,921	0.01	0.05	0.01	0.05	0.01	0.05
P	EP0B.02	Administrative Boiler 2	EP0B.02	Administrative Boiler 2	See Note 1	See Note 1	See Note 1	November 2005	October 2, 2009		18.14	158,921	0.01	0.05	0.01	0.05	0.01	0.05
P	EP0G.01	Emergency Generator	EP0G.01	Emergency Generator	See Note 1	See Note 1	See Note 1	November 2005	October 3, 2009		N/A	N/A	0.94	0.23	0.77	0.19	0.75	0.19
F	EP0X.05		EP0X.05	Quarry waste pile	Not Applicable	Not Applicable	Not Applicabl	Not Applicable	Not Applicable		Not Applicable	3.1	0.47	2.07	0.24	1.04	0.24	1.04
F	EP0X.06		EP0X.06	New Crusher feed pile	Not Applicable	Not Applicable	Not Applicabl	Not Applicable	Not Applicable		Not Applicable	2	0.23	1.00	0.11	0.50	0.11	0.50
F	EP03.01		EP03.01	Storage Bays (5 piles)	Not Applicable	Not Applicable	Not Applicabl	Not Applicable	Not Applicable		Not Applicable	1.06	0.08	0.35	0.04	0.18	0.04	0.18
F	EP26.05		EP26.05	Gypsum/Synthetic Gypsum storage pile (Craneway)	Not Applicable	Not Applicable	Not Applicabl	Not Applicable	Not Applicable		Not Applicable	0.25	0.01	0.05	0.01	0.03	0.01	0.03
F	EP26.08		EP26.08	Limestone Storage pile (Craneway)	Not Applicable	Not Applicable	Not Applicabl	Not Applicable	Not Applicable		Not Applicable	0.25	0.01	0.05	0.01	0.03	0.01	0.03
F	EP15.04.03		EP15.04.03	Coal storage pile (Craneway)	Not Applicable	Not Applicable	Not Applicabl	Not Applicable	Not Applicable		Not Applicable	0.25	0.01	0.03	0.00	0.01	0.00	0.01
F	EP15.04.04		EP15.04.04	Petcoke Storage Pile (Craneway)	Not Applicable	Not Applicable	Not Applicabl	Not Applicable	Not Applicable		Not Applicable	0.25	0.01	0.03	0.00	0.01	0.00	0.01
F	EP14.08		EP14.08	Clinker stockpile (Craneway)	Not Applicable	Not Applicable	Not Applicabl	Not Applicable	Not Applicable		Not Applicable	0.1	0.00	0.02	0.00	0.01	0.00	0.01
F	EP25.01		EP25.01	Quarry haul roads (new crusher)	Not Applicable	Not Applicable	Not Applicabl	Not Applicable	Not Applicable		Not Applicable	4,125,933	53.10	203.90	15.67	60.18	1.57	6.02
F	EP25.03		EP25.03	Quarry haul roads (waste)	Not Applicable	Not Applicable	Not Applicabl	Not Applicable	Not Applicable		Not Applicable	213,841	3.93	15.10	1.16	4.46	0.12	0.45
F	EP25.04.02		EP25.04.02	Cement shipments	Not Applicable	Not Applicable	Not Applicabl	Not Applicable	Not Applicable		Not Applicable	2,062,011	1.29	4.93	0.26	0.99	0.06	0.24
F	EP25.05.01		EP25.05.01	Additive trucks (unpaved)	Not Applicable	Not Applicable	Not Applicabl	Not Applicable	Not Applicable		Not Applicable	219,076	0.00	0.00	0.00	0.00	0.00	0.00
F	EP25.05.02		EP25.05.02	Additive trucks (paved)	Not Applicable	Not Applicable	Not Applicabl	Not Applicable	Not Applicable		Not Applicable	219,076	0.08	0.29	0.02	0.06	0.00	0.01
F	EP25.06.01		EP25.06.01	Fuel deliveries (unpaved)	Not Applicable	Not Applicable	Not Applicabl	Not Applicable	Not Applicable		Not Applicable	175,266	0.00	0.00	0.00	0.00	0.00	0.00
F	EP25.06.02		EP25.06.02	Fuel deliveries (paved)	Not Applicable	Not Applicable	Not Applicabl	Not Applicable	Not Applicable		Not Applicable	175,266	0.12	0.47	0.02	0.09	0.01	0.02
F	EP25.07		EP25.07	Waste dust trucks (unpaved)	Not Applicable	Not Applicable	Not Applicabl	Not Applicable	Not Applicable		Not Applicable	90,801	7.98	30.63	2.35	9.04	0.24	0.90
F	EP25.08		EP25.08	Misc. plant vehicles (unpaved)	Not Applicable	Not Applicable	Not Applicabl	Not Applicable	Not Applicable		Not Applicable	-	1.80	6.90	0.53	2.04	0.05	0.20
F	EP25.09.01		EP25.09.01	Dry Flyash trucks (For Cement) (unpaved)	Not Applicable	Not Applicable	Not Applicabl	Not Applicable	Not Applicable		Not Applicable	50,293	0.25	0.98	0.08	0.29	0.01	0.03
F	EP25.09.02		EP25.09.02	Dry Flyash trucks (For Cement) (paved)	Not Applicable	Not Applicable	Not Applicabl	Not Applicable	Not Applicable		Not Applicable	50,293	0.10	0.40	0.02	0.08	0.01	0.02
F	EP25.09.03		EP25.09.03	Dry Flyash trucks (For Calciner) (unpaved)	Not Applicable	Not Applicable	Not Applicabl	Not Applicable	Not Applicable		Not Applicable	264,552	3.75	14.39	1.11	4.25	0.11	0.42
F	EP25.09.04		EP25.09.04	Dry Flyash trucks (For Calciner) (paved)	Not Applicable	Not Applicable	Not Applicabl	Not Applicable	Not Applicable		Not Applicable	264,552	0.08	0.32	0.02	0.06	0.00	0.02
F	EP25.10.01		EP25.10.01	Waste dust customer trucks (unpaved)	Not Applicable	Not Applicable	Not Applicabl	Not Applicable	Not Applicable		Not Applicable	35,274	0.89	3.43	0.26	1.01	0.03	0.10
F	EP25.10.02		EP25.10.02	Waste dust customer trucks (paved)	Not Applicable	Not Applicable	Not Applicabl	Not Applicable	Not Applicable		Not Applicable	35,274	0.04	0.14	0.01	0.03	0.00	0.01
F	EP25.14		EP25.14	Gypsum/Synthetic Gypsum haul road (unpaved)	Not Applicable	Not Applicable	Not Applicabl	Not Applicable	Not Applicable		Not Applicable	150,879	3.87	14.86	1.14	4.39	0.11	0.44
F	EP25.12		EP25.12	Gypsum/Synthetic Gypsum haul road (paved)	Not Applicable	Not Applicable	Not Applicabl	Not Applicable	Not Applicable		Not Applicable	150,879	0.04	0.17	0.01	0.03	0.00	0.01
F	EP42.06.01		EP42.06.01	Lime deliveries (unpaved)	Not Applicable	Not Applicable	Not Applicabl	Not Applicable	Not Applicable		Not Applicable	77,161	0.00	0.00	0.00	0.00	0.00	0.00
F	EP42.06.02		EP42.06.02	Lime deliveries (paved)	Not Applicable	Not Applicable	Not Applicabl	Not Applicable	Not Applicable		Not Applicable	77,161	0.06	0.23	0.01	0.05	0.00	0.01
F	EP25.15		EP25.15	Alternate Fuel Trucks (paved)	Not Applicable	Not Applicable	Not Applicabl	Not Applicable	Not Applicable		Not Applicable	67,593	0.06	0.25	0.01	0.05	0.00	0.01
F	EP25.16		EP25.16	Hauling Clinker to Primary Crusher (Paved)	Not Applicable	Not Applicable	Not Applicabl	Not Applicable	Not Applicable		Not Applicable	66,138	0.04	0.18	0.01	0.04	0.00	0.01
F	EP25.17		EP25.17	Hauling Clinker to Primary Crusher (Unpaved)	Not Applicable	Not Applicable	Not Applicabl	Not Applicable	Not Applicable		Not Applicable	66,138	1.41	6.17	0.42	1.82	0.04	0.18
F	EP25.18		EP25.18	Hauling Limestone/Clinker from Quarry to Craneway(Unpa	Not Applicable	Not Applicable	Not Applicabl	Not Applicable	Not Applicable		Not Applicable	66,138	2.82	12.33	0.83	3.64	0.08	0.36
F	EP25.19		EP25.19	Hauling Limestone/Clinker from Quarry to Craneway(Pave	Not Applicable	Not Applicable	Not Applicabl	Not Applicable	Not Applicable		Not Applicable	66,138	0.09	0.37	0.02	0.07	0.00	0.02
F	EP50.01		EP50.01	Quarry Diesel Tank (Tank 56 - 15,000 gal)	See Note 1	See Note 1	See Note 1	November 2005	November 20, 2009		45	390,500	N/A	N/A	N/A	N/A	N/A	N/A
F	EP50.02		EP50.02	Light Oil Tank (Tank 73 - 64,500 gal)	See Note 1	See Note 1	See Note 1	November 2005	August 31, 2009		13,200	115,632,000	N/A	N/A	N/A	N/A	N/A	N/A
F	EP50.03		EP50.03	Grinding Aid Tank (Tank 74 - 10,600 gal)	See Note 1	See Note 1	See Note 1	November 2005	February 15, 2010		26	231,264	N/A	N/A	N/A	N/A	N/A	N/A
F	EP50.04		EP50.04	Air Entrainment Tank (Tank 75 - 5,300 gal)	See Note 1	See Note 1	See Note 1	November 2005	February 15, 2010		26	231,264	N/A	N/A	N/A	N/A	N/A	N/A

Note 1 - Per call with Denton McDerment of WV DEP-DAQ on June 9, 2010, Manufactuer, Model, and Serial Numbers will only be provided where readily available for major pieces of equipment.

TABLE E-2

PSD Permit EP ID	EU ID	EU Description	Type of Firing (Indirect or Direct Fired)	Maximum Design Heat Input and/or Maximum HP Rating	Type & BTU/Hr Rating of Burners	All Fuels Permitted to be Used	Primary and Secondary Fuel		
							Primary and Secondary Fuel Types	Maximum Hourly Fuel Usage	Maximum Annual Fuel Usage
CD42.04	EP42.04	Kiln System - Inline Raw Mill / PH/PC Kiln / Clinker Cooler	Indirect	1396 MMBTU/hr	Burner 1 - Duoflex 91MW Burner 2 - Single Pipe 100MW	Petroleum Coke Coal Fines Diesel Contaminated Soil	Primary Fuel - Coal/Coke Blend Secondary Fuel - Diesel	Coal/Coke Blend - 22mtons per burner (x2) Diesel - 10 cubic meters	Coal/Coke Blend - 292,110 Ston/year Diesel - 100,000 cubic meters
EP44.16	EP44.16	Finish Mill 1/2 Air Heater	Direct	19.84 MMBTU/hr	19.84 MMBTU/hr	Diesel Natural Gas	Primary Fuel - Diesel Secondary Fuel - Natural Gas	Diesel - 141.73 gal/hr Natural Gas - 1.95E-2 MMscf/hr	Diesel - 1,241,518 gal/yr Natural Gas - 170.40 MMscf/yr
EP0B.01	EP0B.01	Administrative Boiler 1	Direct	1.66 MMBTU/hr	1.66 MMBTU/hr	Liquid Propane Gas	Liquid Propane Gas	18.14 gal/hr	158,921 gal/yr
EP0B.02	EP0B.02	Administrative Boiler 2	Direct	1.66 MMBTU/hr	1.66 MMBTU/hr	Liquid Propane Gas	Liquid Propane Gas	18.14 gal/hr	158,921 gal/yr
EP0G.01	EP0G.01	Emergency Generator	Direct	1341 HP	3.42 MMBTU/hr	Diesel	Diesel	Data Not Available	Data Not Available
EP45.16	EP45.16	Rail Transloader	Direct	0.56 MMBTU/hr	0.56 MMBTU/hr	Diesel	Diesel	4 gal/hr	14,560 gals/yr
EP37.15	EP37.15	Mobile Limestone Crushers Operations	Direct	TESAB - 440 HP Lokotrack - 415 HP	TESAB - 3.08 MMBTU/hr Lokotrack - 2.91 MMBTU/hr	Diesel	Diesel	Data Not Available	Data Not Available

Table E-3

PSD Permit EP ID	EU ID	EU Description	Potential CO Emissions (lb/hr)	Potential CO Emissions (tpy)	Potential NOx Emissions (lb/hr)	Potential NOx Emissions (tpy)	Potential Lead Emissions (lb/hr)	Potential Lead Emissions (tpy)	Potential SO2 Emissions (lb/hr)	Potential SO2 Emissions (tpy)	Potential VOC Emissions (lb/hr)	Potential VOC Emissions (tpy)
CD42.04	EP42.04	Kiln System - Inline Raw Mill / PH/PC Kiln / Clinker Cooler	3960.0	4425.8	1745.0	3983.2	0.022	0.083	2111.3	3230.8	38.7	154.9
EP44.16	EP44.16	Finish Mill 1/2 Air Heater	0.7	3.1	2.8	12.4	0.00018	0.00078	10.1	44.1	0.048	0.211
EP0B.01	EP0B.01	Administrative Boiler 1	0.1367	0.6	0.1627	0.71	8.13725E-07	3.56E-06	0.001	0.004	0.009	0.04
EP0B.02	EP0B.02	Administrative Boiler 2	0.1367	0.6	0.1627	0.71	8.13725E-07	3.56E-06	0.001	0.004	0.009	0.04
EP0G.01	EP0G.01	Emergency Generator	7.38	1.84	32.18	8.05	-	-	0.54	0.14	0.95	0.24
EP45.16	EP45.16	Rail Transloader	0.5320	0.968	2.4700	4.495	-	-	0.1620	0.296	0.1960	0.357
EP37.15	EP37.15	Mobile Limestone Crushers Operations[1]	4.92	21.55	5.06	22.16	-	-	1.74	7.6	0.56	2.46

Note 1 - Emissions account for operation of two worst case (i.e., largest HP) mobile crushers.

ATTACHMENT F – SCHEDULE OF COMPLIANCE FORMS

As of July 2016, the Plant is not aware of any current compliance issues which need to be addressed on an Attachment F – Schedule of Compliance Form. Therefore, no Attachment F – Schedule of Compliance Forms are included in this Application.

ATTACHMENT G – AIR POLLUTION CONTROL DEVICE FORMS

Included in this section is Table G which contains all information in tabular format pertinent to particulate control devices associated with the Attachment G – Air Pollution Control Device Form.

A copy of the Attachment G – Air Pollution Control Device Form is also included in this section for the PH/PC kiln system's SO_2 scrubber and NO_x SNCR control system.

ATTACHMENT G - Air Pollution Control Device Form

Control device ID number: CD42.04A	**List all emission units associated with this control device.** CD42.04	
Manufacturer: Lechler Inc.	**Model number:** Custom	**Installation date:** July 2012

Type of Air Pollution Control Device:

___ Baghouse/Fabric Filter ___ Venturi Scrubber ___ Multiclone

___ Carbon Bed Adsorber ___ Packed Tower Scrubber ___ Single Cyclone

___ Carbon Drum(s) ___ Other Wet Scrubber ___ Cyclone Bank

___ Catalytic Incinerator ___ Condenser ___ Settling Chamber

___ Thermal Incinerator ___ Flare _X__ Other (describe) __Selective Non-catalytic Reduction (SNCR)____

___ Wet Plate Electrostatic Precipitator ___ Dry Plate Electrostatic Precipitator

List the pollutants for which this device is intended to control and the capture and control efficiencies.

Pollutant	Capture Efficiency	Control Efficiency
NOx	N/A	N/A

Explain the characteristic design parameters of this control device (flow rates, pressure drops, number of bags, size, temperatures, etc.).

Injects a 19% aqueous ammonia solution at a max injection rate of 4 gpm to control NOx emissions.

Is this device subject to the CAM requirements of 40 C.F.R. 64? ___ Yes _X_ No

If Yes, **Complete ATTACHMENT H**

If No**, Provide justification.** Justification provided in Attachment H.

Describe the parameters monitored and/or methods used to indicate performance of this control device.

Per Lechler Operation & Maintenance Manual.

ATTACHMENT G - Air Pollution Control Device Form

Control device ID number: CD42.04B	**List all emission units associated with this control device.** CD42.04	
Manufacturer: TurboSonic	**Model number:** Custom	**Installation date:** October 2009

Type of Air Pollution Control Device:

___ Baghouse/Fabric Filter ___ Venturi Scrubber ___ Multiclone

___ Carbon Bed Adsorber ___ Packed Tower Scrubber ___ Single Cyclone

___ Carbon Drum(s) ___ Other Wet Scrubber ___ Cyclone Bank

___ Catalytic Incinerator ___ Condenser ___ Settling Chamber

___ Thermal Incinerator ___ Flare _X__ Other (describe) __SO_2 Scrubber____

___ Wet Plate Electrostatic Precipitator ___ Dry Plate Electrostatic Precipitator

List the pollutants for which this device is intended to control and the capture and control efficiencies.

Pollutant	Capture Efficiency	Control Efficiency
SO_2	N/A	N/A

Explain the characteristic design parameters of this control device (flow rates, pressure drops, number of bags, size, temperatures, etc.).

The SO_2 scrubber sprays finely atomized lime slurry into the gas stream to control SO_2 emissions. SO2 is absorbed into the droplets and neutralized with the lime. The droplets evaporate leaving the contaminants trapped in dust particles for collection by the baghouse.

Is this device subject to the CAM requirements of 40 C.F.R. 64? ___ Yes _X_ No

If Yes, **Complete ATTACHMENT H**

If No**, Provide justification.** Justification provided in Attachment H.

Describe the parameters monitored and/or methods used to indicate performance of this control device.

Per TurboSonic Operation & Maintenance Manual.

TABLE G-1

CD ID	CD Description	EU ID	EU Description	Equipment Manufacturer	Equipment Model Number	Start-Up (Installation) Date	Type of Air Pollution Control Device	Temp. (°F)	Flowrate (m^3/h)	Flowrate (dscfm)	Pressure Drop - High/Low (inches H2O)	Bag Dimensions			Capture Efficency (%)			Control Efficiency (%)			Subject to CAM requirements of 40 CFR 64?	Parameters Monitored?
												No. of Bags	Diameter (in)	Length (ft)	TSP	PM10	PM2.5	TSP	PM10	PM2.5		
CD37.03	New Primary Crusher D\C	EP37.03.01	Conveyor to feeder	CTP	UDR16.512TBR	July 1, 2009	Baghouse/Fabric Filter	68	70,000	41,200	5.9/-3.9	512	6	12	100	100	100	99.95	99.95	99.95	No	Pressure Drop Weekly
		EP37.03.02	Conveyor to Hammermill																			
		EP37.03.03	Hammermill to feeder																			
		EP37.03.04	Feeder to conveyor																			
CD37.04	New Crushing System D\C1	EP37.04.01	Conveyor to split	CTP	87BV42BM-TBR	July 1, 2009	Baghouse/Fabric Filter	68	8,000	4,709	5.9/-3.9	42	6	8	100	100	100	99.95	99.95	99.95	No	Pressure Drop Weekly
		EP37.04.02	Split to conveyor																			
CD37.06	Premix Conveying D\C	EP37.06.01	Conveyor to split	BOLDECO	9x9OP12TP-C	July 1, 2009	Baghouse/Fabric Filter	68	10,800	6,357	5.9/-3.9	81	6	12	100	100	100	99.95	99.95	99.95	No	Pressure Drop Weekly
		EP37.06.02	Split to top conveyor																			
		EP37.06.03	Split to bottom conveyor																			
CD38.01	Premix Storage Feeding D\C	EP38.01.01	Top conveyor to swing conveyor	BOLDECO	6x7OP8TP-C	July 1, 2009	Baghouse/Fabric Filter	68	3,600	2,119	5.9/-3.9	42	6	8	100	100	100	99.95	99.95	99.95	No	Pressure Drop Weekly
		EP38.01.02	Swing conveyor to Limestone pile																			
CD38.02	Premix Storage Discharge D\C	EP38.02.01	Pile to feeder 1	BOLDECO	6x7OP6TP-C	September 14, 2009	Baghouse/Fabric Filter	68	3,600	2,119	5.9/-3.9	56	6	6	100	100	100	99.95	99.95	99.95	No	Pressure Drop Weekly
		EP38.02.02	Feeder 1 to bottom conveyor																			
		EP38.02.03	Pile to feeder 2																			
		EP38.02.04	Feeder 2 to bottom conveyor																			
CD39.05	Additive Delivery System D\C	EP39.05	Additives truck to conveyor	BOLDECO	28x14OP12TP-U	September 5, 2009	Baghouse/Fabric Filter	68	50,000	29,429	5.9/-3.9	392	6	12	100	100	100	99.95	99.95	99.95	No	Pressure Drop Weekly
		EP39.04.04	Conveyor to conveyor																			
CD39.01	Additive Feeding System D\C	EP39.01.01	Conveyor to split	BOLDECO	10x9OP12TP-C	September 15, 2009	Baghouse/Fabric Filter	68	12,600	7,416	5.9/-3.9	90	6	12	100	100	100	99.95	99.95	99.95	No	Pressure Drop Weekly
		EP39.01.02	Split to conveyor																			
		EP39.03.02	Conveyor to shale bin																			
		EP39.04.01	Conveyor to shale bin 2																			
		EP39.07.01	Split to pyrite silo																			
		EP39.08.01	Split to sand silo																			
CD39.02	Limestone Bin D\C	EP39.03.01	Conveyor to limestone mix bin	BOLDECO	6x7OP8TP-C	September 15, 2009	Baghouse/Fabric Filter	68	3,600	2,119	5.9/-3.9	42	6	8	100	100	100	99.95	99.95	99.95	No	Pressure Drop Weekly
CD39.03	Raw Material Discharge D\C 1	EP39.03.03	Shale bin to feeder	BOLDECO	7x9OP10TP-C	September 15, 2009	Baghouse/Fabric Filter	68	7200	4,238	5.9/-3.9	63	6	10	100	100	100	99.95	99.95	99.95	No	Pressure Drop Weekly
		EP39.03.04	Shale bin feeder to conveyor																			
		EP39.02.01	Limestone mix bin to feeder																			
		EP39.02.02	Limestone mix feeder to conveyor																			
		EP39.08.02	Sand silo to feeder																			
		EP39.08.03	Sand silo feeder to conveyor																			
		EP39.07.02	Pyrite silo to feeder																			
		EP39.07.03	Pyrite silo feeder to conveyor																			
CD39.04	Raw Material Discharge D\C 2	EP39.04.02	Shale silo 2 to feeder	BOLDECO	7x9OP10TP-C	September 15, 2009	Baghouse/Fabric Filter	68	5400	3,178	5.9/-3.9	63	6	10	100	100	100	99.95	99.95	99.95	No	Pressure Drop Weekly
		EP39.04.03	Shale silo 2 feeder to conveyor																			
CD39.06	Raw Mill Feeding D\C	EP39.06.01	Raw Mill Feed Conveyor	BOLDECO	6x7OP8TP-C	September 15, 2009	Baghouse/Fabric Filter	68	3600	2,119	5.9/-3.9	42	6.00	8	100	100	100	99.95	99.95	99.95	No	Pressure Drop Weekly
CD40.01	Raw Mill High Zone D\C	EP40.01.01	RM Feed Conveyor to conveyor	BOLDECO	10x12OP12TP-U	September 15, 2009	Baghouse/Fabric Filter	68	15,300	9,005	5.9/-3.9	120	6.00	10	100	100	100	99.95	99.95	99.95	No	Pressure Drop Weekly
		EP40.01.02	Conveyor to split																			
		EP40.01.03	Split to hopper																			
		EP40.02.03	Elevator to conveyor																			
		EP40.04.01	Split to Raw Mill																			
CD40.02	Raw Mill Low Zone D\C	EP40.02.01	Conveyor to split	BOLDECO	10x9OP12TP-C	September 15, 2009	Baghouse/Fabric Filter	68	12,600	7,416	5.9/-3.9	90	6.00	12	100	100	100	99.95	99.95	99.95	No	Pressure Drop Weekly
		EP40.02.02	Split to bucket elevator																			
		EP40.04.02	Raw Mill to conveyor																			
		EP40.02.04	Conveyor to bucket elevator																			
CD40.05	Raw Meal Air Slide D\C	EP40.05	Raw Meal Conveying Equipment	BOLDECO	9x9OP12TP-C	September 15, 2009	Baghouse/Fabric Filter	194	8,160	4,803	5.9/-3.9	81	6	12	100	100	100	99.95	99.95	99.95	No	Pressure Drop Weekly
CD40.06	Homo Silo Feeding D\C	EP40.06	Homogenizing Silo Feeding Equipment	BOLDECO	8x9OP12TP-C	September 15, 2009	Baghouse/Fabric Filter	194	9,000	5,297	5.9/-3.9	72	6	12	100	100	100	99.95	99.95	99.95	No	Pressure Drop Weekly
CD40.07	Homo Silo Discharge D\C	EP40.07	Homogenizing Silo Discharging Equipment	BOLDECO	2x7x9OP8TP-C	October 24, 2009	Baghouse/Fabric Filter	194	7,200	4,238	5.9/-3.9	126	6	8	100	100	100	99.95	99.95	99.95	No	Pressure Drop Weekly
CD40.08	Top of Homo Silo D\C	EP40.08	Top of Homogenizing Silo	Sly	SBR-78-8	May 2010	Baghouse/Fabric Filter	194	3,772	2,220	N/A	56	5.75	8.33	100	100	100	99.95	99.95	99.95	No	Pressure Drop Weekly
CD41.04	Alternate Fuel Feeding System D/C	EP41.04	Alternate Fuel Feeding System	Infaststaub	AJN 152	Not Yet in Operation	Baghouse/Fabric Filter	68-104	1,200	706	12/8	20	17.7	32.7	100	100	100	99.95	99.95	99.95	No	Pressure Drop Weekly
CD41.05	Aternate Fuel Dosing System D/C	EP41.05	Alternate Fuel Dosing System	Infaststaub	AJN 302-SL	Not Yet in Operation	Baghouse/Fabric Filter	68-104	2,401	1413	12/8	20	17.7	32.7	100	100	100	99.95	99.95	99.95	No	Pressure Drop Weekly
CD42.02	Kiln Feeding Bucket Elevator D\C	EP42.02	Kiln Feeding Bucket Elev DC	BOLDECO	2x7x9OP10TP-C	October 24, 2009	Baghouse/Fabric Filter	194	9,000	5,297	5.9/-3.9	126	6.00	10	100	100	100	99.95	99.95	99.95	No	Pressure Drop Weekly
CD42.03	Kiln Feeding D\C 1	EP42.03	Kiln Feed Belt	BOLDECO	14x12OP12TP-U	October 24, 2009	Baghouse/Fabric Filter	194	21,600	12,713	5.9/-3.9	168	6.00	12	100	100	100	99.95	99.95	99.95	No	Pressure Drop Weekly
CD42.05	Kiln Feeding D\C 2	EP42.05	Kiln Feed Belt	BOLDECO	D4x8xOP10TP-C	October 24, 2009	Baghouse/Fabric Filter	194	3,600	2,119	5.9/-3.9	64	6.00	8	100	100	100	99.95	99.95	99.95	No	Pressure Drop Weekly
CD42.04	Inline Raw Mill / PH/PC Kiln / Clinker Cooler & Bypass & Coal Mill D\Cs	EP42.04	Kiln System - Inline Raw Mill / PH/PC Kiln / Clinker Cooler	REDECAM	10DPL24X13/5.9	October 24, 2009	Baghouse/Fabric Filter	185-392	1,213,070	713,986	5.9/-3.9	6,240	6.00	19.3	100	100	100	99.95	99.95	99.95	No	Pressure Drop Weekly
		EP42.08	Kiln Bypass Baghouse DC	REDECAM	3DPA20x13/5.9							1,560	6.00	19.3								
		EP41.03.01	Coal Mill	CTP	HJPS-1x1-42x19-5-12							798	6.00	16								
CD42.01	Cement Fringe Bin D\C	EP42.01	Cement Fringe Bin	Sly	SBR-1711-8	May 15, 2010	Baghouse/Fabric Filter	174	13,018	7,662	4/3	187	5.75	100	100	100	100	99.95	99.95	99.95	No	Pressure Drop Weekly
CD42.06	Lime Storage D\C	EP42.06	Lime Storage for Scrubber System	Chemco	CECDC300	December 1, 2009	Baghouse/Fabric Filter	68	1,699	1,000	6/3	12	8	3.79	100	100	100	99.95	99.95	99.95	No	Pressure Drop Weekly
CD42.07	Bypass Truck Spout Dedusting	EP42.07	Bypass Truck Spout Dedusting	Cimbria Moduflex	F300	February 20, 2010	Baghouse/Fabric Filter	212	500	294	N/A	8	3	1.50	100	100	100	99.95	99.95	99.95	No	Pressure Drop Weekly
CD43.03	Clinker Storage Feeding D\C	EP43.05	Clinker conveyor to big clinker silo	BOLDECO	8x9OP12TP-C	October 24, 2009	Baghouse/Fabric Filter	266	12,000	7,063	5.9/-3.9	72	6	12	100	100	100	99.95	99.95	99.95	No	Pressure Drop Weekly
CD43.19	Top of LA Clinker Silo DC	EP43.19	Top of LA Clinker Silo	TBD	TBD	Not Yet in Operation	Baghouse/Fabric Filter	266	11,044	6,500	5.9/-3.9	81	6	12	100	100	100	99.95	99.95	99.95	No	Pressure Drop Weekly

TABLE G-1

CD ID	CD Description	EU ID	EU Description	Equipment Manufacturer	Equipment Model Number	Start-Up (Installation) Date	Type of Air Pollution Control Device	Temp. (°F)	Flowrate (m^3/h)	Flowrate (dscfm)	Pressure Drop - High/Low (inches H2O)	Bag Dimensions			Capture Efficency (%)			Control Efficiency (%)			Subject to CAM requirements of 40 CFR 64?	Parameters Monitored?
												No. of Bags	Diameter (in)	Length (ft)	TSP	PM10	PM2.5	TSP	PM10	PM2.5		
CD43.20	Normal Clinker Bin at Pan Conveyor 73 DC	EP43.20	Normal Clinker Bin at Pan Conveyor 73	NotAvailable	NotAvailable	March 2013	Baghouse/Fabric Filter	68	16,141	9,500	5.9/-3.9	120	6	10	100	100	100	99.95	99.95	99.95	No	Pressure Drop Weekly
CD43.21	Top of Normal Clinker Silo DC	EP43.21	Top of Normal Clinker Silo	NotAvailable	NotAvailable	November 2013	Baghouse/Fabric Filter	266	13,592	8,000	5.9/-3.9	120	6	10	100	100	100	99.95	99.95	99.95	No	Pressure Drop Weekly
CD43.04	Small Clinker Storage Feeding D\C	EP43.04	Clinker conveyor to clinker silo	BOLDECO	7x9OP8TP-C	October 24, 2009	Baghouse/Fabric Filter	266	5,400	3,178	5.9/-3.9	63	6	8	100	100	100	99.95	99.95	99.95	No	Pressure Drop Weekly
CD43.06	Small Clinker Storage Discharge D\C	EP43.06.01	Low Alkali Clinker Silo to upper conveyors	BOLDECO	6x7OP6TP-C	November 15, 2009	Baghouse/Fabric Filter	68	3,600	2,119	5.9/-3.9	56	6	6	100	100	100	99.95	99.95	99.95	No	Pressure Drop Weekly
		EP43.06.02	Upper conveyors to lower conveyor																			
		EP43.06.03	Low Alkali Clinker silo to lower conveyor																			
CD43.07	Clinker Storage Discharge D\C	EP43.07.01	Big clinker silo to upper conveyor1	BOLDECO	6x7OP6H-C	November 15, 2009	Baghouse/Fabric Filter	68	3,600	2,119	5.9/-3.9	56	6	6	100	100	100	99.95	99.95	99.95	No	Pressure Drop Weekly
		EP43.07.02	Big clinker silo to upper conveyor2																			
		EP43.07.03	Big clinker silo to lower conveyor																			
		EP43.07.04	Big clinker silo to short conveyor																			
		EP43.07.05	Short conveyor to lower conveyor																			
CD43.08	Finish Mill Conveying D\C1	EP43.08	Upper conveyor 1 to FM feed hoppers belt	BOLDECO	6x7OP6H-C	November 15, 2009	Baghouse/Fabric Filter	68	3,600	2,119	5.9/-3.9	56	6	6	100	100	100	99.95	99.95	99.95	No	Pressure Drop Weekly
CD43.09	Finish Mill Conveying D\C2	EP43.09	Lower conveyor to FM feed hoppers belt	BOLDECO	6x7OP6H-C	November 15, 2009	Baghouse/Fabric Filter	68	3,600	2,119	5.9/-3.9	56	6	6	100	100	100	99.95	99.95	99.95	No	Pressure Drop Weekly
CD43.13	Finish Mill Conveying D\C3	EP43.13	Upper conveyor 2 to FM feed hoppers belt	BOLDECO	6x7OP6H-C	November 15, 2009	Baghouse/Fabric Filter	266	3,600	2,119	5.9/-3.9	56	6	6	100	100	100	99.95	99.95	99.95	No	Pressure Drop Weekly
CD42.04		EP41.02.04	Conveyor to Coal Mill	BOLDECO	2x79OP10TP-C	October 24, 2009	Baghouse/Fabric Filter	185-392			5.9/-3.9		17.02		100	100	100	99.95	99.95	99.95	No	Pressure Drop Weekly
CD43.14	Finish Mill 1 & 2 Hoppers D\C	EP43.14	Conveyor to clinker feeding hoppers (FM1 &2)	BOLDECO	8x9OP12TP-C	November 13, 2009	Baghouse/Fabric Filter	68	9,000	5,297	5.9/-3.9	72	6.00	12.00	100	100	100	99.95	99.95	99.95	No	Pressure Drop Weekly
		EP43.15	Conveyor to lower conveyor (FM3)																			
CD43.16	Finish Mill 3 Hopper D\C	EP43.16	Lower conveyor to clinker feeding hopper (FM3)	BOLDECO	8x9OP12TP-C	November 13, 2009	Baghouse/Fabric Filter	68	9,000	5,297	5.9/-3.9	72	6.00	12.00	100	100	100	99.95	99.95	99.95	No	Pressure Drop Weekly
CD43.17	Normal Clinker Bin - Bin Vent	EP43.17	Normal Clinker Bin - Bin Vent	Sly	SBR-98-8	June 2010	Baghouse/Fabric Filter	230	4,745	2,793	N/A	72	5.75	8.33	100	100	100	99.95	99.95	99.95	No	Pressure Drop Weekly
CD44.01	Finish Mill 2 Feeding D\C1	EP44.01	L.A. clinker bin to FM2 conveyor	BOLDECO	7x9OP8TP-C	December 16, 2009	Baghouse/Fabric Filter	266	5400	3,178	5.9/-3.9	63	6.00	8.00	100	100	100	99.95	99.95	99.95	No	Pressure Drop Weekly
CD44.02	Finish Mill 1 Feeding D\C1	EP44.02	Clinker bin to FM1 conveyor	BOLDECO	7x9OP8TP-C	November 13, 2009	Baghouse/Fabric Filter	68	5400	3,178	5.9/-3.9	63	6.00	8.00	100	100	100	99.95	99.95	99.95	No	Pressure Drop Weekly
CD44.03	Finish Mill 2 Feeding D\C2	EP44.03	Clinker bin to FM2 conveyor	BOLDECO	7x8OP6-H-C	December 16, 2009	Baghouse/Fabric Filter	68	3600	2,119	5.9/-3.9	56	6	6.00	100	100	100	99.95	99.95	99.95	No	Pressure Drop Weekly
CD44.04	Finish Mill 2 Feeding D\C3	EP44.04.01	Limestone bin to FM2 conveyor	BOLDECO	7x9OP8TP-C	December 16, 2009	Baghouse/Fabric Filter	68	5400	3,178	5.9/-3.9	63	6.00	8.00	100	100	100	99.95	99.95	99.95	No	Pressure Drop Weekly
		EP44.04.02	Gypsum/synthetic gypsum bin to FM2 conveyor																			
CD44.05	Finish Mill 1 Feeding D\C 2	EP44.05.01	Limestone bin to FM1 conveyor	BOLDECO	7x9OP8TP-C	November 13, 2009	Baghouse/Fabric Filter	68	5400	3,178	5.9/-3.9	63	6.00	6.00	100	100	100	99.95	99.95	99.95	No	Pressure Drop Weekly
		EP44.05.02	Gypsum/synthetic gypsum bin to FM1 conveyor																			
CD19.02	Finish Mill 3 Baghouse D\C	EP19.01Pb	No. 3 Finish Mill Separator (Existing FM 10)	Fuller Plenum-Pulse	8Z128	February 1, 2010	Baghouse/Fabric Filter	225	105000	61,801	N/A	1,024	N/A	N/A	100	100	100	99.9	99.9	99.9	No	Pressure Drop Weekly
CD19.01	Finish Mill 3 Norblo D\C	EP19.01U	FM3 Feed bins to feeders	Envirotech	HE-17-6	February 1, 2010	Baghouse/Fabric Filter	225	33980	20,000	N/A	187	N/A	N/A	100	100	100	99.9	99.9	99.9	No	Pressure Drop Weekly
		EP19.01Pa.01	FM3 Feeders to belt conveyor 650																			
		EP19.01Pa.02	Belt conveyor 650 to FM3																			
		EP19.02	Finish Mill 3																			
CD44.06	Finish Mill 1 Conveying D\C	EP44.06	FM1 Conveyor to conveyor	BOLDECO	7x9OP8TP-C	November 13, 2009	Baghouse/Fabric Filter	68	5,400	3,178	5.9/-3.9	63	6	8.00	100	100	100	99.95	99.95	99.95	No	Pressure Drop Weekly
CD44.07	Finish Mill 1 High Zone D\C	EP44.07.01	Elevator to FM1 conveyor	BOLDECO	10x9OP10TP-C	November 13, 2009	Baghouse/Fabric Filter	68	12,600	7,416	5.9/-3.9	90	6	12.00	100	100	100	99.95	99.95	99.95	No	Pressure Drop Weekly
		EP44.07.02	FM1 Conveyor to bin																			
		EP44.07.03	Conveyor to Finish Mill 1																			
CD44.08	Finish Mill 1 Low Zone D\C	EP44.08.01	Finish Mill 1 to Conveyor	BOLDECO	6x9OP10TP-C	November 13, 2009	Baghouse/Fabric Filter	212	7,200	4,238	5.9/-3.9	54	6	10.00	100	100	100	99.95	99.95	99.95	No	Pressure Drop Weekly
		EP44.08.02	Bin to FM1 conveyor																			
		EP44.08.03	FM1 Conveyor to bucket elevator																			
CD44.09	Finish Mill 1 D\C	EP44.09	Finish Mill 1	REDECAM	6DPL20x13/5,9	November 13, 2009	Baghouse/Fabric Filter	203	130,000	76,515	5.9/-3.9	3,120	6.00	19.30	100	100	100	99.95	99.95	99.95	No	Pressure Drop Weekly
CD44.13	Finish Mill 1 Discharge D\C	EP44.13	Finish Mill 1 Conveying	BOLDECO	6x7OP8TP-C	November 13, 2009	Baghouse/Fabric Filter	266	3,600	2,119	5.9/-3.9	42	6	8.00	100	100	100	99.95	99.95	99.95	No	Pressure Drop Weekly
CD44.14	Finish Mill 2 Conveying D\C	EP44.14	FM2 Conveyor to conveyor	BOLDECO	7x9OP8TP-C	December 16, 2009	Baghouse/Fabric Filter	266	5,400	3,178	5.9/-3.9	63	6	8.00	100	100	100	99.95	99.95	99.95	No	Pressure Drop Weekly
CD44.10	Finish Mill 2 High Zone D\C	EP44.10.01	FM2 Elevator to conveyor	BOLDECO	10x9OP12TP-C	December 16, 2009	Baghouse/Fabric Filter	266	12,600	7,416	5.9/-3.9	90	6	12.00	100	100	100	99.95	99.95	99.95	No	Pressure Drop Weekly
		EP44.10.02	FM2 Conveyor to bin																			
		EP44.10.03	Conveyor to Finish Mill 2																			
CD44.11	Finish Mill 2 Low Zone D\C	EP44.11.01	Finish Mill 2 to conveyor	BOLDECO	6x9OP10TP-C	December 16, 2009	Baghouse/Fabric Filter	212	7,200	4,238	5.9/-3.9	54	6	10.00	100	100	100	99.95	99.95	99.95	No	Pressure Drop Weekly
		EP44.11.02	Bin to FM2 conveyor																			
		EP44.11.03	FM2 Conveyor to bucket elevator																			
CD44.12	Finish Mill 2 D\C	EP44.12	Finish Mill 2	REDECAM	6DPL20x13/5,9	December 16, 2009	Baghouse/Fabric Filter	266	130,000	76,515	5.9/-3.9	3,120	6.00	19.30	100	100	100	99.95	99.95	99.95	No	Pressure Drop Weekly
CD44.15	Finish Mill 2 Discharge D\C	EP44.15	Finish Mill 2 Conveying	BOLDECO	6x7OP8TP-C	December 16, 2009	Baghouse/Fabric Filter	266	3,600	2,119	5.9/-3.9	42	6	8.00	100	100	100	99.95	99.95	99.95	No	Pressure Drop Weekly
CD44.17	Finish Mills Reject Bin	EP44.17	Finish Mills Reject Bin	Cimbria Moduflex	F300	December 16, 2009	Baghouse/Fabric Filter	212.00	500	294	N/A	8.00	3.00	1.50	100	100	100	99.95	99.95	99.95	No	Pressure Drop Weekly
CD44.18	Finish Mill 1 Reject Elevator High Zone DC	EP44.18	Finish Mill 1 Reject Elevator High Zone	TBD	TBD	Not Yet in Operation	Baghouse/Fabric Filter	68.00	2549	1500.00	5.9/-3.9	30.00	6.00	8.00	100	100	100	99.95	99.95	99.95	No	Pressure Drop Weekly
CD44.19	Finish Mill 2 Reject Elevator High Zone DC	EP44.19	Finish Mill 2 Reject Elevator High Zone	TBD	TBD	Not Yet in Operation	Baghouse/Fabric Filter	68.00	2549	1500.00	5.9/-3.9	30.00	6.00	8.00	100	100	100	99.95	99.95	99.95	No	Pressure Drop Weekly
CD45.01	Finish Mill 1 Airslides D\C	EP45.01	Finish Mill 1 airslides	BOLDECO	7x9OP10TP-C	November 13, 2009	Baghouse/Fabric Filter	212	7,849	4,620	5.9/-3.9	63	6	10.00	100	100	100	99.95	99.95	99.95	No	Pressure Drop Weekly
CD45.02	Finish Mill 2 Airslides D\C	EP45.02	Finish Mill 2 airslides	BOLDECO	7x9OP10TP-C	November 13, 2009	Baghouse/Fabric Filter	212	7,849	4,620	5.9/-3.9	63	6	10.00	100	100	100	99.95	99.95	99.95	No	Pressure Drop Weekly
CD45.03	Cement Silos Feeding D\C1	EP45.03	Finish Mill 1 to cement silos	BOLDECO	7x9OP8TP-C	November 13, 2009	Baghouse/Fabric Filter	212	5,400	3,178	5.9/-3.9	63	6.00	8.00	100	100	100	99.95	99.95	99.95	No	Pressure Drop Weekly
CD45.04	Cement Silos Feeding D\C2	EP45.04	Finish Mill 2 to cement silos	BOLDECO	7x9OP8TP-C	November 13, 2009	Baghouse/Fabric Filter	212	5,400	3,178	5.9/-3.9	63	6.00	8.00	100	100	100	99.95	99.95	99.95	No	Pressure Drop Weekly

TABLE G-1

CD ID	CD Description	EU ID	EU Description	Equipment Manufacturer	Equipment Model Number	Start-Up (Installation) Date	Type of Air Pollution Control Device	Temp. (°F)	Flowrate (m^3/h)	Flowrate (dscfm)	Pressure Drop - High/Low (inches H2O)	Bag Dimensions			Capture Efficency (%)			Control Efficiency (%)			Subject to CAM requirements of 40 CFR 64?	Parameters Monitored?
												No. of Bags	Diameter (in)	Length (ft)	TSP	PM10	PM2.5	TSP	PM10	PM2.5		
CD45.05	Cement Silo A1 & A2 D\C	EP45.05	Cement Silo A1 & A2	BOLDECO	7x9OP10TP-C	November 13, 2009	Baghouse/Fabric Filter	212	8,600	5,062	5.9/-3.9	63	6.00	10.00	100	100	100	99.95	99.95	99.95	No	Pressure Drop Weekly
CD45.06	Cement Silo B1 & B2 D\C	EP45.06	Cement Silo B1 & B2	BOLDECO	7x9OP10T-C	November 13, 2009	Baghouse/Fabric Filter	212	8,600	5,062	5.9/-3.9	63	6.00	10.00	100	100	100	99.95	99.95	99.95	No	Pressure Drop Weekly
CD45.07	Cement Silo C1 & C2 D\C	EP45.07	Cement Silo C1 & C2	BOLDECO	8x9OP12TP-C	November 13, 2009	Baghouse/Fabric Filter	68	9,000	5,297	5.9/-3.9	72	6.00	12.00	100	100	100	99.95	99.95	99.95	No	Pressure Drop Weekly
CD45.08	Truck Loadout 1 D\C	EP45.08	Bulk lane loadout 1	BOLDECO	5x9OP12TP-C	December 15, 2009	Baghouse/Fabric Filter	212	5,399	3,178	5.9/-3.9	45	6	12.00	100	100	100	99.95	99.95	99.95	No	Pressure Drop Weekly
CD45.09	Truck Loadout 2 D\C	EP45.09	Bulk lane loadout 2	BOLDECO	5x9OP12TP-C	December 15, 2009	Baghouse/Fabric Filter	212	4,800	2,825	5.9/-3.9	45	6	12.00	100	100	100	99.95	99.95	99.95	No	Pressure Drop Weekly
CD45.10	Truck Loadout 3 D\C	EP45.10	Bulk lane loadout 3	BOLDECO	5x9OP12TP-C	December 15, 2009	Baghouse/Fabric Filter	212	4,800	2,825	5.9/-3.9	45	6	12.00	100	100	100	99.95	99.95	99.95	No	Pressure Drop Weekly
CD45.11	Truck Loadout 4 D\C	EP45.11	Bulk lane loadout 4	BOLDECO	5x9OP12TP-C	December 15, 2009	Baghouse/Fabric Filter	212	5,399	3,178	5.9/-3.9	45	6	12.00	100	100	100	99.95	99.95	99.95	No	Pressure Drop Weekly
CD45.14	Cement Analyzer D\C	EP45.14	Cement Analyzer	WAM	FS3 JR24-R	June 21, 2010	Baghouse/Fabric Filter	68	2,500	1,471	100MM CW	12	5.51	35.43	100	100	100	99.95	99.95	99.95	No	Pressure Drop Weekly
CD45.15	Transfer Airslide D\C at the Multi Cell	EP45.15	Transfer Airslide at the Multi Cell	Donaldson Torrit	DLMV 30/15	November 1, 2010	Baghouse/Fabric Filter	212	4,112	2,420	4/1	20	N/A	5	100	100	100	99.95	99.95	99.95	No	Pressure Drop Weekly
CD45.16	Rail Transloader D\C	EP45.16	Rail Transloader	Donaldson Torrit	CPC12	June 1, 2013	Baghouse/Fabric Filter	70	13,932	8,200	7/0.5	12	7	2	100	100	100	99.9	99.9	99.9	No	Pressure Drop Weekly
CD21.05	Middle Bank Silos 1 D\C	EP21.05	Middle Bank Silos 1 DC	Sly	SBR-128-10	August 9, 2009	Baghouse/Fabric Filter	200	7,747	4,560	4/3 (w.g.)	96	5.75	10.30	100	100	100	99.95	99.95	99.95	No	Pressure Drop Weekly
CD21.06	Middle Bank Silos 2 D\C	EP21.06	Middle Bank Silos 2 DC	Sly	SBR-128-10	August 9, 2009	Baghouse/Fabric Filter	200	7,747	4,560	4/3	96	5.75	10.30	100	100	100	99.95	99.95	99.95	No	Pressure Drop Weekly
CD21.07	Middle Bank Silos 3 D\C	EP21.07	Middle Bank Silos 3 DC	Sly	SBR-128-10	August 9, 2009	Baghouse/Fabric Filter	200	7,747	4,560	4/3	96	5.75	10.30	100	100	100	99.95	99.95	99.95	No	Pressure Drop Weekly
CD21.08	Middle Bank Silos 4 D\C	EP21.08	Middle Bank Silos 4 DC	Sly	SBR-128-10	August 9, 2009	Baghouse/Fabric Filter	200	7,747	4,560	4/3	96	5.75	10.30	100	100	100	99.95	99.95	99.95	No	Pressure Drop Weekly
CD21.09	Middle Bank Silos 5 D\C	EP21.09	Middle Bank Silos 5 DC	Sly	SBR-128-10	August 9, 2009	Baghouse/Fabric Filter	200	7,747	4,560	4/3	96	5.75	10.30	100	100	100	99.95	99.95	99.95	No	Pressure Drop Weekly
CD21.10	Middle Bank Vent 1 D\C	EP21.10	Middle Bank Bin Vent 1 - Silos Inlet	Donaldson	CPV - 3	August 9, 2009	Baghouse/Fabric Filter	180	2,744	1,615	2-4	3	7.56	1.87	100	100	100	99.95	99.95	99.95	No	Pressure Drop Weekly
CD21.11	Middle Bank Vent 2 D\C	EP21.11	Middle Bank Bin Vent 2 - Silos Inlet	Donaldson	CPV - 3	August 9, 2009	Baghouse/Fabric Filter	180	2,744	1,615	2-4	3	7.56	1.87	100	100	100	99.95	99.95	99.95	No	Pressure Drop Weekly
CD21.12	Middle Bank Vent 3 D\C	EP21.12	Middle Bank Bin Vent 3 - Silos Discharge	Donaldson	CPV - 3	July 2013	Baghouse/Fabric Filter	180	595	350	2-4	3	7.56	1.87	100	100	100	99.95	99.95	99.95	No	Pressure Drop Weekly
CD21.13	Middle Bank Vent 4 D\C	EP21.13	Middle Bank Bin Vent 4 - Silos Discharge	Donaldson	CPV - 3	July 2013	Baghouse/Fabric Filter	180	595	350	2-4	3	7.56	1.87	100	100	100	99.95	99.95	99.95	No	Pressure Drop Weekly
CD45.12	Rail Loadout 1 D\C	EP45.12	Bulk rail loadout 1	DCL (Sly)	DC49-100	March 30, 2010	Baghouse/Fabric Filter	275	4,672	2,750	3"/6"	49	5.50	8.30	100	100	100	99.95	99.95	99.95	No	Pressure Drop Weekly
CD45.13	Rail Loadout 2 D\C	EP45.13	Bulk rail loadout 2	DCL (Sly)	DC49-100	March 30, 2010	Baghouse/Fabric Filter	275	4,672	2,750	3"/6"	49	5.50	8.30	100	100	100	99.95	99.95	99.95	No	Pressure Drop Weekly
CD46.01	Truck Loadout Silo 1 D\C	EP46.01	Truck Loadout Silo 1	Sly	SBR-98-8	November 2009	Baghouse/Fabric Filter	120	5,646	3,323	4/3	72	5.75	8.30	100	100	100	99.95	99.95	99.95	No	Pressure Drop Weekly
CD46.02	Truck Loadout Silo 2 D\C	EP46.02	Truck Loadout Silo 2	Sly	SBR-98-8	November 2009	Baghouse/Fabric Filter	120	12,374	7,283	4/3	72	5.75	8.30	100	100	100	99.95	99.95	99.95	No	Pressure Drop Weekly
CD46.03	Truck Loadout Silo 3 D\C	EP46.03	Truck Loadout Silo 3	Sly	SBR-78-8	November 2009	Baghouse/Fabric Filter	120	4,253	2,503	4/3	56	5.75	8.30	100	100	100	99.95	99.95	99.95	No	Pressure Drop Weekly
CD46.04	Truck Loadout Silo 4 D\C	EP46.04	Truck Loadout Silo 4	Sly	SBR-78-8	November 2009	Baghouse/Fabric Filter	120	4,253	2,503	4/3	56	5.75	8.30	100	100	100	99.95	99.95	99.95	No	Pressure Drop Weekly
CD46.05	Truck Loadout Silo 5 D\C	EP46.05	Truck Loadout Silo 5	Sly	SBR-78-8	November 2009	Baghouse/Fabric Filter	177	4,000	2,354	4/3	56	5.75	8.30	100	100	100	99.95	99.95	99.95	No	Pressure Drop Weekly
CD46.06	Truck Loadout 5 D\C	EP46.06	Bulk loadout 5 - Truck Loadout Silos	DCL (Sly)	DC49-100	November 2009	Baghouse/Fabric Filter	100	3,043	1,791	4/3	49	5.75	8.30	100	100	100	99.90	99.90	99.90	No	Pressure Drop Weekly
CD46.07	Truck Loadout 6 D\C	EP46.07	Bulk loadout 6 - Truck Loadout Silos	DCL (Sly)	DC49-100	November 2009	Baghouse/Fabric Filter	100	3,043	1,791	3"/6"	49	5.50	8.30	100	100	100	99.90	99.90	99.90	No	Pressure Drop Weekly
CD20.04	East Bank Silos 1 D\C	EP20.04	East Bank Silos 1	Sly	SBR-128-8	November 2009	Baghouse/Fabric Filter	200	6,456	3,800	4/3	96	5.75	8.30	100	100	100	99.95	99.95	99.95	No	Pressure Drop Weekly
CD20.05	East Bank Silos 2 D\C	EP20.05	East Bank Silos 2	Sly	SBR-128-8	November 2009	Baghouse/Fabric Filter	200	6,456	3,800	4/3	96	5.75	8.30	100	100	100	99.95	99.95	99.95	No	Pressure Drop Weekly
CD20.06	East Bank Silos 3 D\C	EP20.06	East Bank Silos 3	Sly	SBR-128-8	November 2009	Baghouse/Fabric Filter	200	6,456	3,800	4/3	96	5.75	8.30	100	100	100	99.95	99.95	99.95	No	Pressure Drop Weekly
CD48.01	Packhouse D\C	EP48.01	Packhouse	Sly	STJ-1515-10	May 10, 2009	Baghouse/Fabric Filter	70	22,850	13,449	4-6" wg	225	5.75	10	100	100	100	99.95	99.95	99.95	No	Pressure Drop Weekly
CD23.01	N.E. Packer D/C	EP23.01	Packer #1 N.E	Indust. Accessories Co	96TB-BHWT-1	Not Avaialble	Baghouse/Fabric Filter	100	11,966	7,043	N/A	162	N/A	N/A	100	100	100	99.90	99.90	99.90	No	Pressure Drop Weekly
CD31.01	Flyash Tank No.1 D\C	EP31.01	Fly Ash Tank #1	Whalen & Sons Inc.	N/A	1995	Baghouse/Fabric Filter	68	4,080.00	2,401	N/A	6	N/A	N/A	100	100	100	99.95	99.95	99.95	No	Pressure Drop Weekly
CD31.02	Bypass Dust Tank D\C	EP31.02	Bypass Dust Tank	Whalen & Sons Inc.	N/A	1995	Baghouse/Fabric Filter	68	4,080.00	2,401	N/A	6	N/A	N/A	100	100	100	99.95	99.95	99.95	No	Pressure Drop Weekly
CD31.03	Bypass Dust Loadout D\C	EP31.03	Bypass Dust silo/loadout	IMTEC	40 tph loading spout	1995	Baghouse/Fabric Filter	68	5,000	2,943	N/A	N/A	N/A	N/A	100	100	100	99.95	99.95	99.95	No	Pressure Drop Weekly
CD22.05	West Bank Silo #70/71 D\C	EP22.05	West Bank Silo #70/71	DCL	DC81-120	December 1, 2014	Baghouse/Fabric Filter	68	12,500	7,357	6/3	81.00	6	120	100	100	100	99.95	99.95	99.95	No	Pressure Drop Weekly
CD22.06	West Bank Silo #72 D\C	EP22.06	West Bank Silo #72	DCL	DC81-120	December 1, 2014	Baghouse/Fabric Filter	68	12,500	7,357	6/3	81.00	6	120	100	100	100	99.95	99.95	99.95	No	Pressure Drop Weekly
CD22.07	West Bank Silo #84 D\C	EP22.07	West Bank Silo #84	DCL	DC81-120	December 1, 2014	Baghouse/Fabric Filter	68	12,500	7,357	6/3	81.00	6	120	100	100	100	99.95	99.95	99.95	No	Pressure Drop Weekly
CD22.08	West Bank Silos Loadout Sp	EP22.08	West Bank Silos Loadout Spout	DCL	DC49-100SVTH	December 1, 2014	Baghouse/Fabric Filter	68	5,437	3,200	6/3	49.00	6	100	100	100	100	99.95	99.95	99.95	No	Pressure Drop Weekly
CD22.09	Dry Flyash Bin D\C	EP22.09	Dry Flyash Bin	Sly	SBR-78-8	November 2009	Baghouse/Fabric Filter	68	4,672	2,750	N/A	56	5.75	8.33	100	100	100	99.95	99.95	99.95	No	Pressure Drop Weekly

ATTACHMENT H – COMPLIANCE ASSURANCE MONITORING (CAM) FORMS

As denoted on Attachment G, no control devices at the Plant are subject to CAM. Therefore, the Plant does not have any Pollutant-Specific Emission Units which are subject to CAM and no Attachment H forms have been completed as part of this Application. In addition, the Plant was granted a permit shield for 40 CFR 64 under Condition 3.7.2 of the current Title V Operating Permit. The Plant is requesting to retain this permit shield for 40 CFR 64 and is therefore providing an updated CAM Applicability Analysis below to support this request.

CAM Applicability Requirements

Per 40 CFR 64.2(a), requirements of 40 CFR 64 shall only apply to emission units at a major source that satisfies all three of the following applicability criteria:

Criteria 1

40 CFR 64.2(a)(1) - "*The unit is subject to an emission limitation or standard for the applicable regulated air pollutant (or a surrogate thereof), other than an emission limitation or standard that is exempt under paragraph (b)(1) of this section*."

Criteria 2

40 CFR 64.2(a)(2) – "*The unit uses a control device to achieve compliance with any such emission limitation or standard*."

Criteria 3

40 CFR 64.2(a)(3) – "*The unit has potential pre-control device emissions of the applicable regulated air pollutant that are equal to or greater than 100 percent of the amount, in tons per year, required for a source to be classified as a major source. For purposes of this paragraph, "potential pre-control device emissions" shall have the same meaning as "potential to emit," as defined in §64.1, except that emission reductions achieved by the applicable control device shall not be taken into account*."

Particulate CAM Applicability Analysis

Table H-1, provided after this analysis, lists all particulate emitting emission units at the Plant and identifies what federal regulations each emission unit is subject to and whether each unit is equipped with a particulate control device. As presented in Table H-1, all emission units at the Plant, which utilize a particulate control device, are subject to one of the following federal regulations:

- NSPS Subpart OOO (Final Rule 4/28/09)
- NSPS Subpart Y (Final Rule 10/8/09)
- NESHAP Subpart LLL (Final Rule 6/14/99, last amended 7/27/15)

40 CFR 64.2(b)(1)(i) exempts all "*emission limitations or standards proposed by the Administrator after November 15, 1990 pursuant to Section 111 or 112 of the Act*." All particulate emitting emission units with control devices at the Plant are subject to an emission

standard which was proposed after the exemption date of November 15, 1990. Therefore, they are all exempt from the requirements of 40 CFR 64.

SO_2, NO_x, CO, and VOC CAM Applicability Analysis

The only emission unit at the Plant with the potential to emit uncontrolled amounts of SO_2, NO_x, CO, and/or VOC greater than 100 tons/year is the PH/PC kiln system. However, although the PH/PC kiln system is subject to limitations on these pollutants in the current Title V Operating Permit, it does not use a control device to meet the CO or VOC emission limitations. Therefore, the PH/PC kiln system is not subject to 40 CFR 64 for CO or VOC.

The PH/PC kiln system does utilize air pollution control devices in order to comply with its emission limitations on SO_2 and NO_x. Specifically, a SO_2 scrubber and SNCR NO_x control system are utilized by the PH/PC kiln system. However, per Condition 4.1.22 of the existing Title V Operating Permit, the Plant is required to operate a SO_2 and NO_x CEMS on the main stack that vents all emissions from the PH/PC kiln system. 40 CFR 64.2(b)(1)(vi) exempts those pollutants for which a unit is required by a Part 70 Operating Permit to operate a continuous compliance determination method (i.e., CEMS) to demonstrate compliance with an emission limit. Therefore, the PH/PC kiln system is also not subject to 40 CFR 64 for SO_2 or NO_x.

TABLE H-1 - CAM APPLICABILITY ANALYSIS FOR PARTICULATE EMISSIONS

P=point F=Fugitive	PSD Permit EP ID	CD Description	EU ID	EU Description	Criteria 1 - Subject to NSPS or NESHAP?	Criteria 2 - Unit Equiped with a Control Device?
GROUP 1 - Quarrying and Crushing						
F	EP0X.01		EP0X.01	Quarry drilling	N/A	Fugitive Source - Control device not required to meet emission limitations.
F	EP0X.02		EP0X.02	Quarry blasting	N/A	Fugitive Source - Control device not required to meet emission limitations.
F	EP0X.03.01		EP0X.03.01	Loader to truck (good rock)	N/A	Fugitive Source - Control device not required to meet emission limitations.
F	EP0X.03.02		EP0X.03.02	Loader to truck (waste rock)	N/A	Fugitive Source - Control device not required to meet emission limitations.
F	EP0X.03.03		EP0X.03.03	Truck to waste pile	N/A	Fugitive Source - Control device not required to meet emission limitations.
F	EP37.02.01		EP37.02.01	Truck to large bin	NSPS Subpart OOO	Fugitive Source - Control device not required to meet emission limitations.
F	EP37.02.02		EP37.02.02	Large bin to conveyor	NSPS Subpart OOO	Fugitive Source - Control device not required to meet emission limitations.
P	CD37.03	New Primary Crusher D\C	EP37.03.01	Conveyor to feeder	NSPS Subpart OOO	Yes
P			EP37.03.02	Conveyor to Hammermill		
P			EP37.03.03	Hammermill to feeder		
P			EP37.03.04	Feeder to conveyor		
P	CD37.04	New Crushing System D\C1	EP37.04.01	Conveyor to split	NSPS Subpart OOO	Yes
P			EP37.04.02	Split to conveyor		
F	EP37.05		EP37.05	Split to surge pile	NSPS Subpart OOO	Fugitive Source - Control device not required to meet emission limitations.
F	EP37.06		EP37.06	Limestone Crusher Feed Pile (For Finish Mills)	N/A	Fugitive Source - Control device not required to meet emission limitations.
F	EP37.07		EP37.07	Limestone Crusher Feed Pile Reclaim	N/A	Fugitive Source - Control device not required to meet emission limitations.
F	EP37.08		EP37.08	Limestone/Clinker Storage Pile (Quarry)	NESHAP Subpart LLL	Fugitive Source - Control device not required to meet emission limitations.
F	EP37.09		EP37.09	Limestone/Clinker Reclaim from Quarry Storage Pile	N/A	Fugitive Source - Control device not required to meet emission limitations.
F	EP37.10		EP37.10	Truck Dump to Craneway Storage Pile	N/A	Fugitive Source - Control device not required to meet emission limitations.
F	EP37.11		EP37.11	Limestone/Clinker Storage Pile (Outside Craneway)	NESHAP Subpart LLL	Fugitive Source - Control device not required to meet emission limitations.
F	EP37.12		EP37.12	Limestone/Clinker Transfer to Craneway Storage Building	NESHAP Subpart LLL	Fugitive Source - Control device not required to meet emission limitations.
F	EP37.13		EP37.13	Clinker Transfer from Craneway to Truck	N/A	Fugitive Source - Control device not required to meet emission limitations.
F	EP37.14		EP37.14	Limestone Dump to Mobile Crushers	NSPS Subpart OOO	Fugitive Source - Control device not required to meet emission limitations.
F	EP37.15		EP37.15	Mobile Limestone Crushers Operations	NSPS Subpart OOO NSPS Subpart IIII	Fugitive Source - Control device not required to meet emission limitations.
P	CD37.06	Premix Conveying D\C	EP37.06.01	Conveyor to split	NSPS Subpart OOO	Yes
P			EP37.06.02	Split to top conveyor		
P			EP37.06.03	Split to bottom conveyor		
P	CD38.01	Premix Storage Feeding D\C	EP38.01.01	Top conveyor to swing conveyor	NSPS Subpart OOO	Yes
P			EP38.01.02	Swing conveyor to Limestone pile		
GROUP 2 - Raw Material Preparation						
P	CD38.02	Premix Storage Discharge D\C	EP38.02.01	Pile to feeder1	NSPS Subpart OOO	Yes
P			EP38.02.02	Feeder1 to bottom conveyor		
P			EP38.02.03	Pile to feeder2		
P			EP38.02.04	Feeder2 to bottom conveyor		
P	CD39.05	Additive Delivery System D\C	EP39.05	Additives truck to conveyor	NSPS Subpart OOO	Yes
P			EP39.04.04	Conveyor to conveyor		
F	EP40.03		EP40.03	Split to (surge)pile	NSPS Subpart OOO	Fugitive Source - Control device not required to meet emission limitations.
P	CD39.01	Additive Feeding System D\C	EP39.01.01	Conveyor to split	NSPS Subpart OOO	Yes
P			EP39.01.02	Split to conveyor		
P			EP39.03.02	Conveyor to shale bin		
P			EP39.04.01	Conveyor to shale bin 2		
P			EP39.07.01	Split to pyrite silo		
P			EP39.08.01	Split to sand silo		
P	CD39.02	Limestone Bin D\C	EP39.03.01	Conveyor to limestone mix bin	NSPS Subpart OOO	Yes

TABLE H-1 - CAM APPLICABILITY ANALYSIS FOR PARTICULATE EMISSIONS

P=point F=Fugitive	PSD Permit EP ID	CD Description	EU ID	EU Description	Criteria 1 - Subject to NSPS or NESHAP?	Criteria 2 - Unit Equiped with a Control Device?
P	CD39.03	Raw Material Discharge D\C 1	EP39.03.03	Shale bin to feeder	NESHAP Subpart LLL	Yes
P			EP39.03.04	Shale bin feeder to conveyor		
P			EP39.02.01	Limestone mix bin to feeder		
P			EP39.02.02	Limestone mix feeder to conveyor		
P			EP39.08.02	Sand silo to feeder		
P			EP39.08.03	Sand silo feeder to conveyor		
P			EP39.07.02	Pyrite silo to feeder		
P			EP39.07.03	Pyrite silo feeder to conveyor		
P	CD39.04	Raw Material Discharge D\C 2	EP39.04.02	Shale silo 2 to feeder	NESHAP Subpart LLL	Yes
P			EP39.04.03	Shale silo 2 feeder to conveyor		
P	CD39.06	Raw Mill Feeding D\C	EP39.06.01	Raw Mill Feed Conveyor	NESHAP Subpart LLL	Yes
P	CD40.01	Raw Mill High Zone D\C	EP40.01.01	RM Feed Conveyor to conveyor	NESHAP Subpart LLL	Yes
P			EP40.01.02	Conveyor to split		
P			EP40.01.03	Split to hopper		
P			EP40.02.03	Elevator to conveyor		
P			EP40.04.01	Split to Raw Mill		
P	CD40.02	Raw Mill Low Zone D\C	EP40.02.01	Conveyor to split	NESHAP Subpart LLL	Yes
P			EP40.02.02	Split to bucket elevator		
P			EP40.04.02	Raw Mill to conveyor		
P			EP40.02.04	Conveyor to bucket elevator		
P	CD40.05	Raw Meal Air Slide D\C	EP40.05	Raw Meal Conveying Equipment	NESHAP Subpart LLL	Yes
P	CD40.06	Homo Silo Feeding D\C	EP40.06	Homogenizing Silo Feeding Equipment	NESHAP Subpart LLL	Yes
P	CD40.07	Homo Silo Discharge D\C	EP40.07	Homogenizing Silo Discharging Equipment	NESHAP Subpart LLL	Yes
P	CD40.08	Top of Homo Silo D\C	EP40.08	Top of Homogenizing Silo	NESHAP Subpart LLL	Yes
F	EP39.07.04		EP39.07.04	Inert Raw Material Hauling to Quarry (Paved)	N/A	Fugitive Source - Control device not required to meet emission limitations.
F	EP39.07.05		EP39.07.05	Inert Raw Material Hauling to Quarry (Unpaved)	N/A	Fugitive Source - Control device not required to meet emission limitations.
F	EP39.08		EP39.08	Inert Raw Material Truck Dump to Pile	N/A	Fugitive Source - Control device not required to meet emission limitations.
F	EP39.09		EP39.09	Inert Raw Material Storage Pile (Within Mines)	NESHAP Subpart LLL	Fugitive Source - Control device not required to meet emission limitations.
F	EP39.10		EP39.10	Inert Raw Material Pile Reclaim	NSPS Subpart OOO	Fugitive Source - Control device not required to meet emission limitations.
F	EP39.11		EP39.11	Inert Raw Material Dump to Primary Crusher	NSPS Subpart OOO	Fugitive Source - Control device not required to meet emission limitations.
F	EP39.12.01		EP39.12.01	Hauling to Additives Unloading Bin (paved)	N/A	Fugitive Source - Control device not required to meet emission limitations.
F	EP39.12.02		EP39.12.02	Hauling to Additives Unloading Bin (unpaved)	N/A	Fugitive Source - Control device not required to meet emission limitations.
F	EP39.14		EP39.14	Additives dump to pile within Additives Storage Building	NSPS Subpart OOO	Fugitive Source - Control device not required to meet emission limitations.
F	EP39.15		EP39.15	Additives Storage Building (4 piles)	NSPS Subpart OOO	Fugitive Source - Control device not required to meet emission limitations.
F	EP39.16		EP39.16	Reclaim from additives piles	NSPS Subpart OOO	Fugitive Source - Control device not required to meet emission limitations.
GROUP 3 - Pyroprocessing						
P	CD41.04	Alternate Fuel Feeding System D/C	EP41.04	Alternate Fuel Feeding System	NESHAP Subpart LLL	Yes
P	CD41.05	Alternate Fuel Dosing System D/C	EP41.05	Alternate Fuel Dosing System	NESHAP Subpart LLL	Yes
P	CD42.02	Kiln Feeding Bucket Elevator D\C	EP42.02	Kiln Feeding Bucket Elev DC	NESHAP Subpart LLL	Yes
P	CD42.03	Kiln Feeding D\C 1	EP42.03	Kiln Feed Belt	NESHAP Subpart LLL	Yes
P	CD42.05	Kiln Feeding D\C 2	EP42.05	Kiln Feed Belt	NESHAP Subpart LLL	Yes
P	CD42.04	Inline Raw Mill / PH/PC Kiln / Clinker Cooler & Bypass & Coal Mill D\Cs	EP42.04	Kiln System - Inline Raw Mill / PH/PC Kiln / Clinker Cooler	NESHAP Subpart LLL	Yes
P			EP42.08	Kiln Bypass Baghouse DC	NESHAP Subpart LLL	Yes
P			EP41.03.01	Coal Mill	NESHAP Subpart LLL	Yes
P	CD42.01	Kiln Bypass Dust D\C	EP42.01	Cement Fringe Bin	NESHAP Subpart LLL	Yes
P	CD42.06	Lime Storage D\C	EP42.06	Lime Storage for Scrubber System	NESHAP Subpart LLL	Yes
P	CD42.07	Bypass Truck Spout Dedusting	EP42.07	Bypass Truck Spout Dedusting	NESHAP Subpart LLL	Yes

TABLE H-1 - CAM APPLICABILITY ANALYSIS FOR PARTICULATE EMISSIONS

P=point F=Fugitive	PSD Permit EP ID	CD Description	EU ID	EU Description	Criteria 1 - Subject to NSPS or NESHAP?	Criteria 2 - Unit Equiped with a Control Device?
GROUP 4 - Clinker Handling and Storage						
P	CD43.03	Clinker Storage Feeding D\C	EP43.05	Clinker conveyor to big clinker silo	NESHAP Subpart LLL	Yes
P	CD43.19	Top of LA Clinker Silo DC	EP43.19	Top of LA Clinker Silo	NESHAP Subpart LLL	Yes
P	CD43.20	Normal Clinker Bin at Pan Conveyor 73 DC	EP43.20	Normal Clinker Bin at Pan Conveyor 73	NESHAP Subpart LLL	Yes
P	CD43.21	Top of Normal Clinker Silo DC	EP43.21	Top of Normal Clinker Silo	NESHAP Subpart LLL	Yes
P	CD43.04	Small Clinker Storage Feeding D\C	EP43.04	Clinker conveyor to clinker silo	NESHAP Subpart LLL	Yes
P	CD43.06	Small Clinker Storage Discharge D\C	EP43.06.01	Low Alkali Clinker Silo to upper conveyors	NESHAP Subpart LLL	Yes
P			EP43.06.02	Upper conveyors to lower conveyor	NESHAP Subpart LLL	Yes
P			EP43.06.03	Low Alkali Clinker silo to lower conveyor	NESHAP Subpart LLL	Yes
P	CD43.07	Clinker Storage Discharge D\C	EP43.07.01	Big clinker silo to upper conveyor1	NESHAP Subpart LLL	Yes
P			EP43.07.02	Big clinker silo to upper conveyor2	NESHAP Subpart LLL	Yes
P			EP43.07.03	Big clinker silo to lower conveyor	NESHAP Subpart LLL	Yes
P			EP43.07.04	Big clinker silo to short conveyor	NESHAP Subpart LLL	Yes
P			EP43.07.05	Short conveyor to lower conveyor	NESHAP Subpart LLL	Yes
P	CD43.08	Finish Mill Conveying D\C1	EP43.08	Upper conveyor 1 to FM feed hoppers belt	NESHAP Subpart LLL	Yes
P	CD43.09	Finish Mill Conveying D\C2	EP43.09	Lower conveyor to FM feed hoppers belt	NESHAP Subpart LLL	Yes
P	CD43.13	Finish Mill Conveying D\C3	EP43.13	Upper conveyor 2 to FM feed hoppers belt	NESHAP Subpart LLL	Yes
GROUP 5 - Fuel Handling						
F	EP15.01.01	-	EP15.01.01	Rail unloading to petcoke hopper	NSPS Subpart Y	Fugitive Source - Control device not required to meet emission limitations.
F	EP15.01.02	-	EP15.01.02	Petcoke hopper to feeders	NSPS Subpart Y	Fugitive Source - Control device not required to meet emission limitations.
F	EP41.01.01	-	EP41.01.01	Petcoke feeders to conveyor	NSPS Subpart Y	Fugitive Source - Control device not required to meet emission limitations.
F	EP41.01.02	-	EP41.01.02	Petcoke Conveyor to split to conveyor	NSPS Subpart Y	Fugitive Source - Control device not required to meet emission limitations.
F	EP41.01.03	-	EP41.01.03	Petcoke Conveyor to CSH fuel bins or pile	NSPS Subpart Y	Fugitive Source - Control device not required to meet emission limitations.
F	EP41.01.04	-	EP41.01.04	Coal Truck unloading to storage hall	NSPS Subpart Y	Fugitive Source - Control device not required to meet emission limitations.
F	EP41.01.05	-	EP41.01.05	Clam bucket to coal pile	NSPS Subpart Y	Fugitive Source - Control device not required to meet emission limitations.
F	EP41.01.06	-	EP41.01.06	Pile to clam bucket	NSPS Subpart Y	Fugitive Source - Control device not required to meet emission limitations.
F	EP41.01.07	-	EP41.01.07	Clam bucket to CSH fuel bins	NSPS Subpart Y	Fugitive Source - Control device not required to meet emission limitations.
F	EP41.02.01	-	EP41.02.01	CSH fuel bins to feeders	NSPS Subpart Y	Fugitive Source - Control device not required to meet emission limitations.
F	EP41.02.02	-	EP41.02.02	Feeders to conveyor	NSPS Subpart Y	Fugitive Source - Control device not required to meet emission limitations.
F	EP41.02.03	-	EP41.02.03	Conveyor to split to conveyor	NSPS Subpart Y	Fugitive Source - Control device not required to meet emission limitations.
F	CD42.04	-	EP41.02.04	Conveyor to Coal Mill	NESHAP Subpart LLL	Yes
GROUP 6 - Cement Production						
P	CD43.14	Finish Mill 1 & 2 Hoppers D\C	EP43.14	Conveyor to clinker feeding hoppers (FM1 &2)	NESHAP Subpart LLL	Yes
			EP43.15	Conveyor to lower conveyor (FM3)		Yes
P	CD43.16	Finish Mill 3 Hopper D\C	EP43.16	Lower conveyor to clinker feeding hopper (FM3)	NESHAP Subpart LLL	Yes
P	CD43.17	Normal Clinker Bin - Bin Vent	EP43.17	Normal Clinker Bin - Bin Vent	NESHAP Subpart LLL	Yes
F	EP26.06.03	-	EP26.06.03	Gypsum/Synthetic Gypsum truck unloading to storage hall	NESHAP Subpart LLL	Fugitive Source - Control device not required to meet emission limitations.
F	EP26.06.04	-	EP26.06.04	Clam bucket to gypsum/synthetic gypsum pile	NESHAP Subpart LLL	Fugitive Source - Control device not required to meet emission limitations.
F	EP26.06.05	-	EP26.06.05	Gypsum/synthetic gypsum pile to clam bucket	NESHAP Subpart LLL	Fugitive Source - Control device not required to meet emission limitations.
F	EP26.06.06	-	EP26.06.06	Clam bucket to gypsum/synthetic gypsum bin (FM1/2/3)	NESHAP Subpart LLL	Fugitive Source - Control device not required to meet emission limitations.
F	EP26.07.01	-	EP26.07.01	Limestone Pile to clam bucket	NESHAP Subpart LLL	Fugitive Source - Control device not required to meet emission limitations.
F	EP26.07.02	-	EP26.07.02	Clam bucket to limestone bin (FM1/2/3)	NESHAP Subpart LLL	Fugitive Source - Control device not required to meet emission limitations.
F	EP27.01	-	EP27.01	Conveyor to clinker hopper	NESHAP Subpart LLL	Fugitive Source - Control device not required to meet emission limitations.
F	EP27.02	-	EP27.02	Clinker hopper to crane	NESHAP Subpart LLL	Fugitive Source - Control device not required to meet emission limitations.
F	EP27.03	-	EP27.03	Crane to clinker pile	NESHAP Subpart LLL	Fugitive Source - Control device not required to meet emission limitations.
F	EP27.04	-	EP27.04	Clinker pile to crane	NESHAP Subpart LLL	Fugitive Source - Control device not required to meet emission limitations.
F	EP27.05	-	EP27.05	Crane to clinker bins (FM1/2/3)	NESHAP Subpart LLL	Fugitive Source - Control device not required to meet emission limitations.
F	EP27.06		EP27.06	Transfer to Outdoor Clinker Storage Pile	NESHAP Subpart LLL	Fugitive Source - Control device not required to meet emission limitations.
F	EP27.07		EP27.07	Outdoor Clinker Storage Pile - Tarped	NESHAP Subpart LLL	Fugitive Source - Control device not required to meet emission limitations.

TABLE H-1 - CAM APPLICABILITY ANALYSIS FOR PARTICULATE EMISSIONS

P=point F=Fugitive	PSD Permit EP ID	CD Description	EU ID	EU Description	Criteria 1 - Subject to NSPS or NESHAP?	Criteria 2 - Unit Equiped with a Control Device?
F	EP27.08		EP27.08	Outdoor Clinker Storage Pile Reclaim	NESHAP Subpart LLL	Fugitive Source - Control device not required to meet emission limitations.
P	CD44.01	Finish Mill 2 Feeding D\C1	EP44.01	L.A. clinker bin to FM2 conveyor	NESHAP Subpart LLL	Yes
P	CD44.02	Finish Mill 1 Feeding D\C1	EP44.02	Clinker bin to FM1 conveyor	NESHAP Subpart LLL	Yes
P	CD44.03	Finish Mill 2 Feeding D\C2	EP44.03	Clinker bin to FM2 conveyor	NESHAP Subpart LLL	Yes
P	CD44.04	Finish Mill 2 Feeding D\C3	EP44.04.01	Limestone bin to FM2 conveyor	NESHAP Subpart LLL	Yes
P			EP44.04.02	Gypsum/synthetic gypsum bin to FM2 conveyor	NESHAP Subpart LLL	Yes
P	CD44.05	Finish Mill 1 Feeding D\C 2	EP44.05.01	Limestone bin to FM1 conveyor	NESHAP Subpart LLL	Yes
P			EP44.05.02	Gypsum/synthetic gypsum bin to FM1 conveyor	NESHAP Subpart LLL	Yes
P	CD19.02	Finish Mill 3 Baghouse D\C	EP19.01Pb	No. 3 Finish Mill Separator (Existing FM 10)	NESHAP Subpart LLL	Yes
F	CD19.01	Finish Mill 3 Norblo D\C	EP19.01U	FM3 Feed bins to feeders	NESHAP Subpart LLL	Yes
P			EP19.01Pa.01	FM3 Feeders to belt conveyor 650	NESHAP Subpart LLL	Yes
P			EP19.01Pa.02	Belt conveyor 650 to FM3	NESHAP Subpart LLL	Yes
P			EP19.02	Finish Mill 3	NESHAP Subpart LLL	Yes
P	CD44.06	Finish Mill 1 Conveying D\C	EP44.06	FM1 Conveyor to conveyor	NESHAP Subpart LLL	Yes
P	CD44.07	Finish Mill 1 High Zone D\C	EP44.07.01	Elevator to FM1 conveyor	NESHAP Subpart LLL	Yes
P			EP44.07.02	FM1 Conveyor to bin	NESHAP Subpart LLL	Yes
P			EP44.07.03	Conveyor to Finish Mill 1	NESHAP Subpart LLL	Yes
P	CD44.08	Finish Mill 1 Low Zone D\C	EP44.08.01	Finish Mill 1 to Conveyor	NESHAP Subpart LLL	Yes
P			EP44.08.02	Bin to FM1 conveyor	NESHAP Subpart LLL	Yes
P			EP44.08.03	FM1 Conveyor to bucket elevator	NESHAP Subpart LLL	Yes
P	CD44.09	Finish Mill 1 D\C	EP44.09	Finish Mill 1	NESHAP Subpart LLL	Yes
P	CD44.13	Finish Mill 1 Discharge D\C	EP44.13	Finish Mill 1 Conveying	NESHAP Subpart LLL	Yes
P	CD44.14	Finish Mill 2 Conveying D\C	EP44.14	FM2 Conveyor to conveyor	NESHAP Subpart LLL	Yes
P	CD44.10	Finish Mill 2 High Zone D\C	EP44.10.01	FM2 Elevator to conveyor	NESHAP Subpart LLL	Yes
P			EP44.10.02	FM2 Conveyor to bin	NESHAP Subpart LLL	Yes
P			EP44.10.03	Conveyor to Finish Mill 2	NESHAP Subpart LLL	Yes
P	CD44.11	Finish Mill 2 Low Zone D\C	EP44.11.01	Finish Mill 2 to conveyor	NESHAP Subpart LLL	Yes
P			EP44.11.02	Bin to FM2 conveyor	NESHAP Subpart LLL	Yes
P			EP44.11.03	FM2 Conveyor to bucket elevator	NESHAP Subpart LLL	Yes
P	CD44.12	Finish Mill 2 D\C	EP44.12	Finish Mill 2	NESHAP Subpart LLL	Yes
P	CD44.15	Finish Mill 2 Discharge D\C	EP44.15	Finish Mill 2 Conveying	NESHAP Subpart LLL	Yes
P	CD44.16	Finish Mill 1/2 Air Heater	EP44.16	Finish Mill 1/2 Air Heater	NESHAP Subpart LLL	Yes
P	CD44.17	Finish Mills Reject Bin	EP44.17	Finish Mills Reject Bin	NESHAP Subpart LLL	Yes
P	CD44.18	Finish Mill 1 Reject Elevator High Zone DC	EP44.18	Finish Mill 1 Reject Elevator High Zone	NESHAP Subpart LLL	Yes
P	CD44.19	Finish Mill 2 Reject Elevator High Zone DC	EP44.19	Finish Mill 2 Reject Elevator High Zone	NESHAP Subpart LLL	Yes
GROUP 7 - Shipping						
P	CD45.01	Finish Mill 1 Airslides D\C	EP45.01	Finish Mill 1 airslides	NESHAP Subpart LLL	Yes
P	CD45.02	Finish Mill 2 Airslides D\C	EP45.02	Finish Mill 2 airslides	NESHAP Subpart LLL	Yes
P	CD45.03	Cement Silos Feeding D\C1	EP45.03	Finish Mill 1 to cement silos	NESHAP Subpart LLL	Yes
P	CD45.04	Cement Silos Feeding D\C2	EP45.04	Finish Mill 2 to cement silos	NESHAP Subpart LLL	Yes
P	CD45.05	Cement Silo A1 & A2 D\C	EP45.05	Cement Silo A1 & A2	NESHAP Subpart LLL	Yes
P	CD45.06	Cement Silo B1 & B2 D\C	EP45.06	Cement Silo B1 & B2	NESHAP Subpart LLL	Yes
P	CD45.07	Cement Silo C1 & C2 D\C	EP45.07	Cement Silo C1 & C2	NESHAP Subpart LLL	Yes
P	CD45.08	Truck Loadout 1 D\C	EP45.08	Bulk lane loadout 1	NESHAP Subpart LLL	Yes
P	CD45.09	Truck Loadout 2 D\C	EP45.09	Bulk lane loadout 2	NESHAP Subpart LLL	Yes
P	CD45.10	Truck Loadout 3 D\C	EP45.10	Bulk lane loadout 3	NESHAP Subpart LLL	Yes
P	CD45.11	Truck Loadout 4 D\C	EP45.11	Bulk lane loadout 4	NESHAP Subpart LLL	Yes
P	CD45.14	Cement Analyzer D\C	EP45.14	Cement Analyzer	NESHAP Subpart LLL	Yes
P	CD45.15	Transfer Airslide D\C at the Multi Cell	EP45.15	Transfer Airslide at the Multi Cell	NESHAP Subpart LLL	Yes

TABLE H-1 - CAM APPLICABILITY ANALYSIS FOR PARTICULATE EMISSIONS

P=point F=Fugitive	PSD Permit EP ID	CD Description	EU ID	EU Description	Criteria 1 - Subject to NSPS or NESHAP?	Criteria 2 - Unit Equiped with a Control Device?
P	CD45.16	Rail Transloader D\C	EP45.16	Rail Transloader	NESHAP Subpart LLL NSPS Subpart IIII	Yes
P	CD21.05	Middle Bank Silos 1 D\C	EP21.05	Middle Bank Silos 1 DC	NESHAP Subpart LLL	Yes
P	CD21.06	Middle Bank Silos 2 D\C	EP21.06	Middle Bank Silos 2 DC	NESHAP Subpart LLL	Yes
P	CD21.07	Middle Bank Silos 3 D\C	EP21.07	Middle Bank Silos 3 DC	NESHAP Subpart LLL	Yes
P	CD21.08	Middle Bank Silos 4 D\C	EP21.08	Middle Bank Silos 4 DC	NESHAP Subpart LLL	Yes
P	CD21.09	Middle Bank Silos 5 D\C	EP21.09	Middle Bank Silos 5 DC	NESHAP Subpart LLL	Yes
P	CD21.10	Middle Bank Vent 1 D\C	EP21.10	Middle Bank Bin Vent 1 - Silos Inlet	NESHAP Subpart LLL	Yes
P	CD21.11	Middle Bank Vent 2 D\C	EP21.11	Middle Bank Bin Vent 2 - Silos Inlet	NESHAP Subpart LLL	Yes
P	CD21.12	Middle Bank Vent 3 D\C	EP21.12	Middle Bank Bin Vent 3 - Silos Discharge	NESHAP Subpart LLL	Yes
P	CD21.13	Middle Bank Vent 4 D\C	EP21.13	Middle Bank Bin Vent 4 - Silos Discharge	NESHAP Subpart LLL	Yes
P	CD45.12	Rail Loadout 1 D\C	EP45.12	Bulk rail loadout 1	NESHAP Subpart LLL	Yes
P	CD45.13	Rail Loadout 2 D\C	EP45.13	Bulk rail loadout 2	NESHAP Subpart LLL	Yes
P	CD46.01	Truck Loadout Silo 1 D\C	EP46.01	Truck Loadout Silo 1	NESHAP Subpart LLL	Yes
P	CD46.02	Truck Loadout Silo 2 D\C	EP46.02	Truck Loadout Silo 2	NESHAP Subpart LLL	Yes
P	CD46.03	Truck Loadout Silo 3 D\C	EP46.03	Truck Loadout Silo 3	NESHAP Subpart LLL	Yes
P	CD46.04	Truck Loadout Silo 4 D\C	EP46.04	Truck Loadout Silo 4	NESHAP Subpart LLL	Yes
P	CD46.05	Truck Loadout Silo 5 D\C	EP46.05	Truck Loadout Silo 5	NESHAP Subpart LLL	Yes
P	CD46.06	Truck Loadout 5 D\C	EP46.06	Bulk loadout 5 - Truck Loadout Silos	NESHAP Subpart LLL	Yes
P	CD46.07	Truck Loadout 6 D\C	EP46.07	Bulk loadout 6 - Truck Loadout Silos	NESHAP Subpart LLL	Yes
P	CD20.04	East Bank Silos 1 D\C	EP20.04	East Bank Silos 1	NESHAP Subpart LLL	Yes
P	CD20.05	East Bank Silos 2 D\C	EP20.05	East Bank Silos 2	NESHAP Subpart LLL	Yes
P	CD20.06	East Bank Silos 3 D\C	EP20.06	East Bank Silos 3	NESHAP Subpart LLL	Yes
P	CD48.01	Packhouse D\C	EP48.01	Packhouse	NESHAP Subpart LLL	Yes
P	CD23.01	N.E. PACKER D/C	EP23.01	Packer #1 N.E.	NESHAP Subpart LLL	Yes
P	CD22.05	West Bank Silo #70/71 D\C	EP22.05	West Bank Silo #70/71	NESHAP Subpart LLL	Yes
P	CD22.06	West Bank Silo #72 D\C	EP22.06	West Bank Silo #72	NESHAP Subpart LLL	Yes
P	CD22.07	West Bank Silo #84 D\C	EP22.07	West Bank Silo #84	NESHAP Subpart LLL	Yes
P	CD22.08	West Bank Silos Loadout Spout I	EP22.08	West Bank Silos Loadout Spout	NESHAP Subpart LLL	Yes
GROUP 8 - Miscellaneous (All Piles, Roads, Fly Ash and Bypass Dust Sources)						
P	CD31.01	Flyash Tank No.1 D\C	EP31.01	Fly Ash Tank #1	NESHAP Subpart LLL	Yes
P	CD31.02	Bypass Dust Tank D\C	EP31.02	Bypass Dust Tank	NESHAP Subpart LLL	Yes
P	CD31.03	Bypass Dust Loadout D\C	EP31.03	Bypass Dust silo/loadout	NESHAP Subpart LLL	Yes
P	CD22.09	Dry Flyash Bin D\C	EP22.09	Dry Flyash Bin	NESHAP Subpart LLL	Yes
P	EP0B.01	Administrative Boiler 1	EP0B.01	Administrative Boiler 1	N/A	Fugitive Source - Control device not required to meet emission limitations.
P	EP0B.02	Administrative Boiler 2	EP0B.02	Administrative Boiler 2	N/A	Fugitive Source - Control device not required to meet emission limitations.
P	EP0G.01	Emergency Generator	EP0G.01	Emergency Generator	N/A	Fugitive Source - Control device not required to meet emission limitations.
F	EP0X.05		EP0X.05	Quarry waste pile	N/A	Fugitive Source - Control device not required to meet emission limitations.
F	EP0X.06		EP0X.06	New Crusher feed pile	N/A	Fugitive Source - Control device not required to meet emission limitations.
F	EP03.01		EP03.01	Stone Storage Bays - (5 piles)	N/A	Fugitive Source - Control device not required to meet emission limitations.
F	EP26.05		EP26.05	Gypsum/Synthetic Gypsum storage pile (Craneway)	N/A	Fugitive Source - Control device not required to meet emission limitations.
F	EP26.08		EP26.08	Limestone Storage pile (Craneway)	N/A	Fugitive Source - Control device not required to meet emission limitations.
F	EP15.04.03		EP15.04.03	Coal storage pile (Craneway)	NSPS Subpart Y	Fugitive Source - Control device not required to meet emission limitations.
F	EP15.04.04		EP15.04.04	Petcoke Storage Pile (Craneway)	NSPS Subpart Y	Fugitive Source - Control device not required to meet emission limitations.
F	EP14.08		EP14.08	Clinker stockpile (Craneway)	NESHAP Subpart LLL	Fugitive Source - Control device not required to meet emission limitations.
F	EP25.01		EP25.01	Quarry haul roads (new crusher)	N/A	Fugitive Source - Control device not required to meet emission limitations.
F	EP25.03		EP25.03	Quarry haul roads (waste)	N/A	Fugitive Source - Control device not required to meet emission limitations.
F	EP25.05.01		EP25.05.01	Additive trucks (unpaved)	N/A	Fugitive Source - Control device not required to meet emission limitations.
F	EP25.05.02		EP25.05.02	Additive trucks (paved)	N/A	Fugitive Source - Control device not required to meet emission limitations.
F	EP25.14		EP25.14	Gypsum/Synthetic Gypsum haul road (unpaved)	N/A	Fugitive Source - Control device not required to meet emission limitations.
F	EP25.12		EP25.12	Gypsum/Synthetic Gypsum haul road (paved)	N/A	Fugitive Source - Control device not required to meet emission limitations.
F	EP25.04.02		EP25.04.02	Cement shipments	N/A	Fugitive Source - Control device not required to meet emission limitations.

TABLE H-1 - CAM APPLICABILITY ANALYSIS FOR PARTICULATE EMISSIONS

P=point F=Fugitive	PSD Permit EP ID	CD Description	EU ID	EU Description	Criteria 1 - Subject to NSPS or NESHAP?	Criteria 2 - Unit Equiped with a Control Device?
F	EP25.06.01		EP25.06.01	Fuel deliveries (unpaved)	N/A	Fugitive Source - Control device not required to meet emission limitations.
F	EP25.06.02		EP25.06.02	Fuel deliveries (paved)	N/A	Fugitive Source - Control device not required to meet emission limitations.
F	EP25.09.01		EP25.09.01	Dry Flyash trucks (For Cement) (unpaved)	N/A	Fugitive Source - Control device not required to meet emission limitations.
F	EP25.09.02		EP25.09.02	Dry Flyash trucks (For Cement) (paved)	N/A	Fugitive Source - Control device not required to meet emission limitations.
F	EP25.09.03		EP25.09.03	Dry Flyash trucks (For Calciner) (unpaved)	N/A	Fugitive Source - Control device not required to meet emission limitations.
F	EP25.09.04		EP25.09.04	Dry Flyash trucks (For Calciner) (paved)	N/A	Fugitive Source - Control device not required to meet emission limitations.
F	EP25.10.01		EP25.10.01	Waste dust customer trucks (unpaved)	N/A	Fugitive Source - Control device not required to meet emission limitations.
F	EP25.10.02		EP25.10.02	Waste dust customer trucks (paved)	N/A	Fugitive Source - Control device not required to meet emission limitations.
F	EP25.08		EP25.08	Misc. plant vehicles (unpaved)	N/A	Fugitive Source - Control device not required to meet emission limitations.
F	EP25.07		EP25.07	Waste dust trucks (unpaved)	N/A	Fugitive Source - Control device not required to meet emission limitations.
F	EP42.06.01		EP42.06.01	Lime deliveries (unpaved)	N/A	Fugitive Source - Control device not required to meet emission limitations.
F	EP42.06.02		EP42.06.02	Lime deliveries (paved)	N/A	Fugitive Source - Control device not required to meet emission limitations.
F	EP25.15		EP25.15	Alternate Fuel Trucks (paved)	N/A	Fugitive Source - Control device not required to meet emission limitations.
F	EP25.16		EP25.16	Hauling Clinker to Primary Crusher (Paved)	N/A	Fugitive Source - Control device not required to meet emission limitations.
F	EP25.17		EP25.17	Hauling Clinker to Primary Crusher (Unpaved)	N/A	Fugitive Source - Control device not required to meet emission limitations.
F	EP25.18		EP25.18	Hauling Limestone/Clinker from Quarry to Craneway (Unpaved)	N/A	Fugitive Source - Control device not required to meet emission limitations.
F	EP25.19		EP25.19	Hauling Limestone/Clinker from Quarry to Craneway (Paved)	N/A	Fugitive Source - Control device not required to meet emission limitations.

* All sources listed as subject to NESHAP Subpart LLL are also subject to NSPS Subpart F.

ATTACHMENT I – FEDERAL AND STATE REGULATORY ANALYSIS

The Title V Renewal Application General Form and Attachment E – Emission Unit Form require that a Title V Operating Permit Renewal Application address all applicable regulatory requirements for individual emission units and facility-wide. This Attachment I – Federal and State Regulatory Analysis is intended to meet the regulatory requirements of the General Form and Attachment E Form.

Table I-1 has been provided following this analysis and contains a summary of all Plant emission sources and their applicable federal regulatory standards. The table identifies each source individually and also identifies the sources in groups; these groups are referenced below in order to simplify listing all affected sources.

New Source Performance Standards (NSPS) – 40 CFR Part 60

Subpart Y – Standards of Performance for Coal Preparation Plants (40 CFR 60.250-258)

The Plant processes a blend of pet coke and coal as fuel in the Portland cement manufacturing process; therefore the coal handling equipment is subject to NSPS Subpart Y. Construction of the coal processing and conveying system commenced prior to April 28, 2008. The Coal Mill baghouse is not subject to NSPS Subpart Y since its emissions co-mingle and are vented out the Main Stack along with the kiln/raw-mill/clinker cooler emissions and alkali bypass emissions. Therefore, the Coal Mill baghouse and all coal conveying sources which are vented to the baghouse are subject to the more stringent standards of 40 CFR 63 Subpart LLL.

40 CFR 60.254 Standards for coal processing and conveying equipment, coal storage systems, transfer and loading systems, and open storage piles.

- The opacity from affected sources is limited to 20%. [40 CFR 60.254(a)]
  Affected Sources: EP15.01.01, EP15.01.02, EP15.04.03, EP15.04.04, EP41.01.01, EP41.01.02, EP41.01.03, EP41.01.04, EP41.01.05, EP41.01.06, EP41.01.07, EP41.02.01, EP41.02.02, EP41.02.03

40 CFR 60.255 Performance tests and other compliance requirements

- An Initial Method 9 Performance Test is required to be conducted within 180 days of the affected source starting operation. [40 CFR 60.255(a)]
  Affected Sources: EP15.01.01, EP15.01.02, EP15.04.03, EP15.04.04, EP41.01.01, EP41.01.02, EP41.01.03, EP41.01.04, EP41.01.05, EP41.01.06, EP41.01.07, EP41.02.01, EP41.02.02, EP41.02.03

40 CFR 60.257 Test methods and procedures

- Method 9 and the procedures in 40 CFR 60.11 are required to determine opacity. [40 CFR 257(a)(1-3)]
  Affected Sources: EP15.01.01, EP15.01.02, EP15.04.03, EP15.04.04, EP41.01.01, EP41.01.02, EP41.01.03, EP41.01.04, EP41.01.05, EP41.01.06, EP41.01.07, EP41.02.01, EP41.02.02, EP41.02.03

40 CFR 60.258 Reporting and Recordkeeping

- The results of the Initial Performance Test are required to be provided to the Administrator and WVDEP within 60 days of testing completion. [40 CFR 258(c)]
  Affected Sources: EP15.01.01, EP15.01.02, EP15.04.03, EP15.04.04, EP41.01.01, EP41.01.02, EP41.01.03, EP41.01.04, EP41.01.05, EP41.01.06, EP41.01.07, EP41.02.01, EP41.02.02, EP41.02.03

<u>Subpart Y Compliance Status:</u>
As of July 2016, all affected sources are currently in compliance with all Subpart Y applicable requirements listed above.

Subpart OOO - Standards of Performance for Nonmetallic Mineral Processing Plants (40 CFR 60.670 –676)

The processing of limestone (e.g., crushers, screens, conveyor transfer points [except to a pile], and storage bins) from sources not subject to 40 CFR 63 Subpart LLL are subject to PM and opacity standards established under NSPS Subpart OOO which became effective on April 28, 2009.

40 CFR 60.672 Standard for particulate matter

- All affected sources equipped with a capture system are required to meet a PM limit of 0.022 gr/dscf and an opacity limit of 7% within 60 days after achieving maximum production, but not later than 180 days after initial start-up. [40 CFR 60.672(a)]
  Affected Sources: CD37.03, CD37.04, CD37.06, CD38.01, CD38.02, CD39.05, CD39.01, CD39.02; (CD39.02 is subject to the Opacity Limit Only)

- The fugitive emission limit for grinding mills, screening operations, bucket elevators, storage bins, and transfer points constructed before April 22, 2008 is 10% opacity which must be met within 60 days after achieving maximum production, but not later than 180 days after initial start-up. [40 CFR 60.672(b)]
  Affected Sources: EP37.02.02, EP37.05, EP40.03

- The fugitive emission limit for grinding mills, screening operations, bucket elevators, storage bins, and transfer points constructed after April 22, 2008 is 7% opacity which must be met within 60 days after achieving maximum production, but not later than 180 days after initial start-up. [40 CFR 60.672(b)]
  Affected Sources: EP39.10, EP39.15, EP39.16

- The fugitive emission limit for crushers without capture systems constructed after April 22, 2008 is 12% opacity which must be met within 60 days after achieving maximum production, but not later than 180 days after initial start-up. [40 CFR 60.672(b)]
  Affected Sources: EP37.15

- Truck dumping of materials into any screening operation, feed hopper, or crusher is exempt from the requirements of this section. [40 CFR 60.672(d)]
  Affected Sources: EP37.02.01, EP37.14, EP39.11, EP39.14

- Any baghouse that controls emissions for an individual storage bin is exempt from the applicable stack PM concentration limit, but must meet the 7% opacity limit. [40 CFR 60.672(f)]
  Affected Sources: CD39.02

40 CFR 60.675 Test methods and procedures

- Compliance with PM standards of 60.672(a) shall be determined by an Initial Performance Test using either Method 5 of Appendix A-4 of Part 60 or Method 17 of Appendix A-6 of Part 60. [40 CFR 60.675(b)(1)]
  Affected Sources: CD37.03, CD37.04, CD37.06, CD38.01, CD38.02, CD39.05, CD39.01

- Compliance with opacity limits shall be determined by conduct of an Initial Method 9 of Appendix A-4 of Part 60. [40 CFR 60.675(b)(1) and 40 CFR 60.675(c)]
  Affected Sources: CD37.03, CD37.04, CD37.06, CD38.01, CD38.02, CD39.05, CD39.01, CD39.02, EP37.02.02, EP37.05, EP40.03, EP39.10, EP39.15, EP39.16, EP37.15

40 CFR 60.676 Reporting and recordkeeping

- Written reports of the results of all performance tests are required to be submitted. [40CFR 60.676(f)]
  Affected Sources: CD37.03, CD37.04, CD37.06, CD38.01, CD38.02, CD39.05, CD39.01, CD39.02, EP37.02.02, EP37.05, EP40.03

<u>Subpart OOO Compliance Status:</u>
As of July 2016, all affected sources are currently in compliance with all Subpart OOO applicable requirements listed above.

Subpart IIII – Standards of Performance for Stationary Compression Ignition Internal Combustion Engines

The rail transloader engine (CD45.16) and portable crushers engines (EP37.15) are subject to the requirements of 40 CFR 60 Subpart IIII which became effective on July 11, 2006 and must comply with the following section:

- The emission standards specified in 40 CFR 60.4204 and 60.4206 for non-emergency stationary compression ignition (CI) internal combustion engines (ICE) with a displacement of less than 30 liters per cylinder.
- The fuel requirements specified in 40 CFR 6-0.4207.
- The compliance requirements specified in 40 CFR 60.4211.

Subpart IIII Compliance Status:
As of July 2016, all affected sources are currently in compliance with all Subpart IIII applicable requirements listed above.

National Emission Standards for Hazardous Air Pollutants (NESHAP) – 40 CFR 63

The Plant is a major source of hazardous air pollutants (HAPs) and therefore subject to NESHAP 40 CFR 63 Subpart LLL (Portland Cement Manufacturing Plants.)

40 CFR 63.1343 Standards for kilns, clinker coolers, raw material dryers, and open clinker storage piles:

- Kilns – Emission Limits during normal operation:
  - Particulate Matter – 0.07 lb/ton clinker
  - Dioxin/Furan – 0.2 ng per dscm (TEQ) corrected to 7% oxygen; or 0.40 ng per dscm (TEQ) corrected to 7% oxygen, when the average of the performance test run average temperatures at the inlet to the particulate matter dust collector is 204 °C (400 °F) or less
  - Mercury – 55 lb/MMtons clinker (rolling 30-day average)
  - Total Hydrocarbon (THC) – 24 ppmvd corrected to 7% oxygen (rolling 30-day average) or meet an alternate limit of 12 ppmvd for total organic HAPs.
  - HCl – 3 ppmvd corrected to 7% oxygen (rolling 30-day average)

  Affected sources: CD42.04

- Kilns – During startup and shutdown the Plant shall abide by the work practices specified in 40 CFR 63.1346(g).
  Affected sources: CD42.04

- Clinker cooler – Emission limits during normal operation
  - Particulate Matter – 0.07 lb/ton clinker

  Affected sources: CD42.04 [Note the clinker cooler vents to the main stack with the kiln, inline raw mill, alkali bypass, and coal mill.]

- Clinker cooler - During startup and shutdown the Plant shall abide by the work practices specified in 40 CFR 63.1348(b)(9).
  Affected sources: CD42.04 [Note the clinker cooler vents to the main stack with the kiln, inline raw mill, alkali bypass, and coal mill.]

- Open Clinker Storage Piles – The Plant must abide by the operating requirements specified in 40 CFR 63.1343(c).
  Affected Sources: EP37.08, EP37.11, EP14.08, EP27.07, EP39.09

40 CFR 63.1345 Emission limits for affected sources other than kilns; clinker coolers; and new and reconstructed raw material dryers:

- All raw material, clinker, or finished product storage bins; conveying system transfer points; bagging systems; bulk loading and unloading systems, and raw and finish mills are subject to a 10% opacity limit.
  Affected Sources: EP37.12, Group 3 (except CD42.04), Group 4, Group 6 (except EP27.07), Group 7, CD39.03, CD39.04, CD39.06, CD40.01, CD40.02, CD40.05, CD40.06, CD40.07, CD40.08, CD31.01, CD31.02, CD31.03, CD22.09

40 CFR 63.1346 Operating limits for kilns

- For all in-line kiln/raw mills subject to a D/F limit, the facility is required to operate the kiln such that the temperature of the gas at the inlet to the kiln particulate matter control device (PMCD) and the alkali bypass PMCD do not exceed the applicable temperature limits that were established during the most recent D/F performance test. [40 CFR 63.1346(a)]
  Affected sources: CD42.04

- During periods of startup and shutdown, the kiln must be operated to meet the requirements of 40 CFR 63.1346(g)(1) to(4). [40 CFR 63.1346(g)]
  Affected sources: CD42.04

40 CFR 63.1347 Operation and Maintenance Plan Requirements

- The Plant is required to prepare a written Operation and Maintenance Plan for each affected source subject to Subpart LLL per 40 CFR 63.1347.

40 CFR 63.1349 Performance testing requirements

- All performance testing shall be conducted per the requirements of 40 CFR 63.1349 and 40 CFR 63.7. [40 CFR 63.1349(a)]

- A kiln or clinker cooler subject to a particulate matter limit shall demonstrate initial compliance by conducting a Method 5 or Method 5I of Appendix A to Part 60 within 180 days of initial start-up. Continuous performance must be monitored through the use of a PM continuous parametric monitoring system (PM CPMS) demonstrating compliance with the site-specific operating limit developed per 40 CFR 63.1349(b)(1)(i). [40 CFR 63.1349(b)(1)]
  Affected sources: CD42.04

- Affected sources subject to an opacity limit that shall demonstrate initial compliance with the opacity limit by conducting a test in accordance with Method 9 of Appendix A to Part 60 per 40 CFR 63.1349(b)(2). [40 CFR 63.1349(b)(2)]

Affected Sources: EP37.12, Group 3 (except CD42.04), Group 4, Group 6 (except EP27.07), Group 7, CD39.03, CD39.04, CD39.06, CD40.01, CD40.02, CD40.05, CD40.06, CD40.07, CD40.08, CD31.01, CD31.02, CD31.03, CD22.09

- An affected source subject to a D/F emission limit shall demonstrate initial compliance by conducted a performance test using Method 23 of Appendix A to Part 60. Kilns and inline kiln/raw mills equipped with an alkali bypass shall conduct simultaneous performance tests of the kiln or inline kiln/raw mill exhaust and the alkali bypass. [40 CFR 63.1349(b)(3)]
  Affected Sources: CD42.04

- An affected source subject to a THC emission limit must operate a CEMS in accordance with the requirements of 40 CFR 63.1350(i). [40 CFR 63.1349(b)(4)]
  Affected Sources: CD42.04

- An affected source subject to a mercury emission limit must operate a CEMS in accordance with the requirements of 40 CFR 63.1350(k). [40 CFR 63.1349(b)(5)]
  Affected Sources: CD42.04

- An affected source subject to a HCl emission limit must conduct performance testing per 40 CFR 63.1349(b)(6). [40 CFR 63.1349(b)(6)]
  Affected Sources: CD42.04

- If an affected source is choosing to comply with the alternative total organic HAP emission limit, they must conduct performance tests per 40 CFR 63.1349(b)(7). Continuous compliance shall be determined by demonstrating compliance through the use of a THC CEMS with a site-specific THC emission limit established during the performance test. [40 CFR 63.1349(b)(7)]
  Affected Sources: CD42.04

- Performance tests for dioxin, organic HAP, or HCl shall be repeated every 30 months. Particulate matter performance tests are required to be reported every 12 months. [40 CFR 63.1349(c)]
  Affected Sources: CD42.04

- Performance test reports must contain the information specified in 40 CFR 63.1349(d) and be submitted no later than 60 days following the performance test. [40 CFR 63.1349(d)]
  Affected Sources: EP37.12, Group 2, Group 4, Group 6 (except EP27.07), Group 7, CD39.03, CD39.04, CD39.06, CD40.01, CD40.02, CD40.05, CD40.06, CD40.07, CD40.08, CD31.01, CD31.02, CD31.03, CD22.09

40 CFR 63.1350 Monitoring requirements

- All affected sources subject to a particulate matter standard must use a PM CPMS to parametrically continuously monitor particulate per 40 CFR 63.1350(b).

Affected Sources: CD42.04

- All affected sources subject to a mercury requirement must continuously monitor clinker production by one of the two methods specified in 40 CFR 63.1350(c).
  Affected Sources: CD42.04

- All affected sources subject to opacity standards under 40 CFR 63.1345 other than raw and finish mills must periodically monitor opacity by conducting monthly 10-minute visible emissions test in accordance with Method 22 of Appendix A to Part 60. The tests shall be conducted as specified in 40 CFR 63.1350(f)(1)(i) to (vii). [40 CFR 63.1350(f)(1)]
  Affected Sources: EP37.12, Group 3 (except CD42.04), Group 4, Group 6 (except EP27.07, CD19.01, CD19.02, CD44.09, CD44.12), Group 7, CD39.03, CD39.04, CD39.06, CD40.01, CD40.02, CD40.05, CD40.06, CD40.07, CD40.08, CD31.01, CD31.02, CD31.03, CD22.09

- The Finish Mills are required to be monitored for opacity by conducting daily 6-minute visible emission observations of the mill sweep and air separator PMCD in accordance with Method 22 of Appendix A to Part 60 and 40 CFR 63.1350(f)(2). [40 CFR 63.1350(f)(2)]
  Affected Sources: CD19.01, CD19.02, CD44.09, CD44.12

- The requirements of 40 CFR 63.1350(f)(2) to conduct daily Method 22 testing shall not apply to any finish mill equipped with a COM.[40 CFR 63.1350(f)(4)]
  Affected Sources: CD44.09, CD44.12

- An affected source subject to a D/F limit is required to continuously record the temperature of exhaust gases from the in-line kiln/raw mill and alkali bypass at the inlet to or upstream of the in-line kiln/raw mill and/or alkali bypass PMCD per 40 CFR 63.1350(g). [40 CFR 63.1350(g)]
  Affected Sources: CD42.04

- An affected source subject to a THC limit must comply with the monitoring requirements of 40 CFR 63.1350(i). [40 CFR 63.1350(i)]
  Affected Sources: CD42.04

- An affected source choosing to comply with the alternate limit for total organic HAPs must continuously monitor THC according to the monitoring requirements of 40 CFR 63.1350(j). [40 CFR 63.1350(j)]
  Affected Sources: CD42.04

- An affected source subject to a mercury limit must comply with the monitoring requirements of 40 CFR 63.1350(k). [40 CFR 63.1350(k)]
  Affected Sources: CD42.04

- An affected source subject to a HCl limit must comply with the monitoring requirements of 40 CFR 63.1350(l). [40 CFR 63.1350(l)]
  Affected Sources: CD42.04

- An affected source subject to an operating limit that requires the use of a CMS, must install operate, and maintain each CMS according to 40 CFR 63.1350(m)(1) through (4).
  Affected Sources: CD42.04, CD19.01, CD19.02

- An affected source subject to an emission limit that has a pounds per ton of clinker unit and that is required to be monitored by a CEMS, must install, operate, calibrate, and maintain a continuous flow rate monitoring system per 40 CFR 63.1350(n).
  Affected Sources: CD42.04

- An affected source that demonstrates compliance with an emission limit through stack testing or emissions monitoring must develop a site-specific monitoring plan according to 40 CFR 63.1350(p).
  Affected Sources: EP37.12, Group 2, Group 4, Group 6 (except EP27.07), Group 7, CD39.03, CD39.04, CD39.06, CD40.01, CD40.02, CD40.05, CD40.06, CD40.07, CD40.08, CD31.01, CD31.02, CD31.03, CD22.09

40 CFR 63.1353 Notification requirements

- All notifications are required to be submitted as per the requirements set forth in §63.9. [40 CFR 63.1353(b)]
  Affected Sources: EP37.12, Group 2, Group 4, Group 6 (except EP27.07), Group 7, CD39.03, CD39.04, CD39.06, CD40.01, CD40.02, CD40.05, CD40.06, CD40.07, CD40.08, CD31.01, CD31.02, CD31.03, CD22.09

40 CFR 63.1354 Reporting requirements

- Reporting is required to be submitted per the requirements set forth in §63.10. [40 CFR 63.1354(b)]
  Affected Sources: EP37.12, Group 2, Group 4, Group 6 (except EP27.07), Group 7, CD39.03, CD39.04, CD39.06, CD40.01, CD40.02, CD40.05, CD40.06, CD40.07, CD40.08, CD31.01, CD31.02, CD31.03, CD22.09

40 CFR 63.1355 Recordkeeping requirements

- All information required under §63.1355 must be maintained in a format readily available for inspection and review. The information must be maintained for five years, with the most recent two years requiring retention of records onsite. [40 CFR 63.1355(a)]
  Affected Sources: EP37.12, Group 2, Group 4, Group 6 (except EP27.07), Group 7, CD39.03, CD39.04, CD39.06, CD40.01, CD40.02, CD40.05, CD40.06, CD40.07, CD40.08, CD31.01, CD31.02, CD31.03, CD22.09

Subpart LLL Compliance Status:
As of July 2016, all affected sources are currently in compliance with all Subpart LLL applicable requirements listed above.

WEST VIRGINIA CODE OF STATE RULES

The air quality regulations for the State of West Virginia are codified in Title 45 of the Code of State Rules (45CSR). Title 45 is divided into series, each covering a specific aspect of the state's air pollution regulatory program. The series that contain requirements that are applicable to the Plant are discussed in the following paragraphs.

SERIES 5 - 45CSR5 *To Prevent and Control Air Pollution From the Operation of Coal Preparation Plants, Coal Handling Operations and Coal Refuse Disposal Areas*

45CSR§5-3 Emission of Particulate Matter Prohibited and Standards of Measurement

- The opacity from any point is required to be less than 20%, except for a period or periods aggregating no more than 5 minutes in any 60-minute period during operation in which the opacity must be less than 60%. [45CSR§5-3.1 and 3.2]
  Affected Sources: CD42.04 (Coal Mill Baghouse Only)

- The opacity from a fugitive dust control system is required to be no more than 20%. [45CSR§5-3.4]
  Affected Sources: EP15.01.01, EP15.01.02, EP15.04.03, EP15.04.04, EP41.01.01, EP41.01.02, EP41.01.03, EP41.01.04, EP41.01.05, EP41.01.06, EP41.01.07, EP41.02.01, EP41.02.02, EP41.02.03

45CSR§5-6 Control and Prohibition of Fugitive Dust Emissions From Coal Handing Operations and Preparation Plants

- The Plant is required to operate all coal handling equipment with fugitive dust control systems in good operating conditions. [45CSR§5-6.1]
  Affected Sources: EP15.01.01, EP15.01.02, EP15.04.03, EP15.04.04, EP41.01.01, EP41.01.02, EP41.01.03, EP41.01.04, EP41.01.05, EP41.01.06, EP41.01.07, EP41.02.01, EP41.02.02, EP41.02.03

- The Plant is required to implement good operating practices to control particulate matter by paving or other dust suppression measures. [45CSR§5-6.2]
  Affected Sources: EP15.01.01, EP15.01.02, EP15.04.03, EP15.04.04, EP41.01.01, EP41.01.02, EP41.01.03, EP41.01.04, EP41.01.05, EP41.01.06, EP41.01.07, EP41.02.01, EP41.02.02, EP41.02.03

Series 5 Compliance Status:
All sources subject to Series 5 are currently in compliance with all regulations listed above.

SERIES 7 - 45CSR7 *To Prevent & Control Particulate Matter Air Pollution from Manufacturing Processes & Associated Operations*

45CSR§7-3 Emission of Smoke and/or Particulate Matter Prohibited and Standards of Measurement

- The emission of smoke and/or particulate matter into the open air from any process source operation is required to be no more than 20% except as provided in 45CSR§7-3.2 through 45CSR§7-3.7. [45CSR§7-3.1]
  Affected Sources: Groups 1, 2, CD45.16, 8

- The provisions of 45CSR§7-3.1 shall not apply to smoke and/or particulate matter emitted from any process source operation which is less than 40% for any period or periods aggregating no more than five minutes in any sixty minute period. [45CSR§7-3.2]
  Affected Sources: Groups 1, 2, 8

- No visible emissions are allowed from any storage structure associated with any manufacturing process that is required by 45CSR§7-5.1 to have a full enclosure and be equipped with a particulate matter control device. [45CSR§7-3.7]
  Affected Sources: Groups 7, 8

45CSR§7-4 Control and Prohibition of Particulate Emissions by Weight from Manufacturing Process Source Operations

- No particulate matter is allowed to be vented into the open air from any type source operation or duplicate source operation, or from all air pollution control equipment installed on any type source operation or duplicate source operation in excess of the quantity specified under the appropriate source operation type in Table 45-7A of this rule. [45CSR§7-4.1]
  Affected Sources: Groups 1, 2, 7, 8

- Any stack serving any process source operation or air pollution control equipment on any process source operation shall contain flow straightening devices or a vertical run of sufficient length to establish flow patterns consistent with acceptable stack sampling procedures. [45CSR§7-4.12]
  Affected Sources: Groups 1, 2, 7, 8

45CSR§7-5 Control of Fugitive Particulate Matter

- The Plant is required to be equipped with fugitive dust control systems for all sources of fugitives (manufacturing or storage). [45CSR§7-5.1]
  Affected Sources: Groups 1, 2, 3, 4, 6, 7, 8, EP41.02.04

- The Plant is required to implement good operating practices to control particulate matter by paving or other dust suppression measures. [45CSR§7-5.2]
  Affected Sources: Groups 1, 2, 3, 4, 6, 7, 8, EP41.02.04

45CSR§7-10 Exemptions

- Provisions of 45CSR§7 shall not apply to particulate matter emissions regulated by Title 45, Series 2, 3, or 5 or to mobile internal combustion engines. [45CSR§7-10.1]
  Affected Sources: EP15.01.01, EP15.01.02, EP15.04.03, EP15.04.04, EP41.01.01, EP41.01.02, EP41.01.03, EP41.01.04, EP41.01.05, EP41.01.06, EP41.01.07, EP41.02.01, EP41.02.02, EP41.02.03

- Maintenance operations shall be exempt from the provisions of 45CSR§7-4 provided that at all times the owner or operator shall conduct maintenance operations in a manner consistent with good air pollution control practice for minimizing emissions. [45CSR§7-10.3]
  Affected Sources: Facility-Wide

<u>Series 7 Compliance Status:</u>
All sources subject to Series 7 are currently in compliance with all regulations listed above.

SERIES 7A - 45CSR7A *Compliance Test Procedures for 45CSR7 – "To Prevent and Control Particulate Air Pollution from Manufacturing Process Operations"*

45CSR§7A-2 Visible Emission Test Procedures

- All visible emission tests are required to follow the procedures outlined in this Series.
  Affected Sources: Facility-Wide

45CSR§7A-3 Mass Emission Test Procedures

- All stack testing to determine particulate mass emissions are required to be performed following the procedures outlined in this Series.
  Affected Sources: Facility-Wide

<u>Series 7A Compliance Status:</u>
All sources subject to Series 7A are currently in compliance with all regulations listed above.

SERIES 8 - 45CSR8 *Ambient Air Quality Standards*

45CSR§8-4 Ambient Air Quality Standards

- The plant is prohibited from allowing emissions of sulfur oxides to the ambient air in any manner which causes or significantly contributes to an exceedence of the primary and secondary ambient air quality standards outlined in this Series. [45CSR§8-4.1]
  Affected Sources: Facility-Wide

- The plant is prohibited from allowing emissions of particulate matter to the ambient air in any manner which causes or significantly contributes to an exceedence of the primary and secondary ambient air quality standards outlined in this Series. [45CSR§8-4.2]

Affected Sources: Facility-Wide

- The plant is prohibited from allowing emissions of Carbon Monoxide to the ambient air in any manner which causes or significantly contributes to an exceedence of the primary and secondary ambient air quality standards outlined in this Series. [45CSR§8-4.3]
  Affected Sources: Facility-Wide

- The plant is prohibited from allowing emissions of ozone to the ambient air in any manner which causes or significantly contributes to an exceedence of the primary and secondary ambient air quality standards outlined in this Series. [45CSR§8-4.4]
  Affected Sources: Facility-Wide

- The plant is prohibited from allowing emissions of nitrogen dioxide to the ambient air in any manner which causes or significantly contributes to an exceedence of the primary and secondary ambient air quality standards outlined in this Series. [45CSR§8-4.5]
  Affected Sources: Facility-Wide

- The plant is prohibited from allowing emissions of lead to the ambient air in any manner which causes or significantly contributes to an exceedence of the primary and secondary ambient air quality standards outlined in this Series. [45CSR§8-4.6]
  Affected Sources: Facility-Wide

Series 8 Compliance Status:
All sources subject to Series 8 are currently in compliance with all regulations listed above.

SERIES 10 - 45CSR10 *To Prevent and Control Air Pollution From the Emission of Sulfur Oxides*

45CSR§10-4 Standards for Manufacturing Process Source Operations

- The emissions into the open air from any source operation cannot exceed an in-stack SO_2 concentration of 2,000 parts per million by volume (ppmv). [45CSR§10-4.1] Any manufacturing source operation which has the potential to emit less than 500 pounds per year of sulfur dioxides is exempt from this requirement. [45CSR§10-4.1.e]
  Affected Sources: CD42.04

- Compliance with allowable sulfur dioxide concentration limits of this rule shall be based on the average of three one-hour stack tests following EPA test methodologies. [45CSR§10-4.2]
  Affected Sources: CD42.04

45CSR§10-8 Testing Monitoring, Recordkeeping and Reporting

- Prior to the installation of calibrated stack gas monitoring devices, sulfur dioxide emission rates shall be calculated on an equivalent fuel sulfur content basis. [45CSR§10-8.2.b]
  Affected Sources: CD42.04

- The owner or operator of fuel burning unit(s), manufacturing process source(s) or combustion source(s) shall demonstrate compliance with 45CSR§10-3, 4 and 5 (Sections 5.1.34 and 5.1.35) by testing and /or monitoring in accordance with one or more of the following: 40 CFR 60, Appendix A, Method 6, Method 15, continuous emissions monitoring systems (CEMS) or fuel sampling and analysis as set forth in an approved monitoring plan for each emission unit. [45CSR§10-8.2.c]
  Affected Sources: CD42.04

- The installation, operation and maintenance of a continuous monitoring system meeting the requirements of 40 CFR 60, Appendix B, Performance Specification 2 (PS2) or Performance Specification 7 (PS7) shall be deemed to fulfill the requirements of a monitoring plan for a fuel burning unit(s), manufacturing process source(s) or combustion source(s). The use of a CEM requires the Plant to follow the quality assurance requirements set forth in 40 CFR 60, Appendix F. [45CSR§10-8.2.c.1]
  Affected Sources: CD42.04

- The owner or operator of fuel burning unit(s), manufacturing process source(s) or combustion source(s) subject to 45CSR§§10-3, 4 or 5 (Sections 5.1.34 and 5.1.35) shall maintain on-site a record of all required monitoring data as established in a monitoring plan pursuant to 45CSR§10-8.2.c. Such records shall be made available to the Director or his duly authorized representative upon request. Such records shall be retained on-site for a minimum of five years. [45CSR§10-8.3.a]
  Affected Sources: CD42.04

- The Plant is required to submit periodic exception report to the Director which provides the details of all excursions outside the range or monitored parameters established in the Monitoring Plan. [45CSR§10-8.3.b]
  Affected Sources: CD42.04

- The owner or operator of a fuel burning unit(s) or a combustion source(s) shall maintain records of the operating schedule and the quantity and quality of fuel consumed in each unit in a manner specified by the Director. Such records are to be maintained on-site and made available to the Director or his duly authorized representative upon request. [45CSR§10-8.3.c]
  Affected Sources: CD42.04

<u>Series 10 Compliance Status:</u>
All sources subject to Series 10 are currently in compliance with all regulations listed above.

SERIES 13 - 45CSR13 *Permits for Construction, Modification, Relocation and Operation of Stationary Sources of Air Pollutants, Notification Requirements, Administrative Updates, Temporary Permits, General Permits, Permission to Commence Construction, and Procedures for Evaluation*

45CSR§13-5 Permit Application and Reporting Requirements for Construction of and Modifications to Stationary Sources

- The Plant is required to obtain a permit to construct, modify, relocate and operate a stationary source. Construction of a major stationary source or a major modification is subject to the pre-construction requirements of 45CSR14. The source may not be constructed, modified, relocated or operated until the Secretary issues a permit approving the construction, modification, relocation or operation. [45CSR§13-5.1]
  Affected Sources: Facility Wide

- All permit applications are required to be signed by a responsible official of the entity which will own or operate the stationary source. [45CSR§13-5.6]
  Affected Sources: Facility Wide

45CSR§13-15 Hazardous Air Pollutants

- The nature and extent of any emission of hazardous air pollutants (an emission inventory) is required to be included in any application for construction, modification, relocation and operation of a stationary source. [45CSR§13-15.1]
  Affected Sources: Facility-Wide

<u>Series 13 Compliance Status:</u>
All sources subject to Series 13 are currently in compliance with all regulations listed above.

SERIES 14 - 45CSR14 *Permits for Construction & Major Modification of Major Stationary Sources of Air Pollution for the Prevention of Significant Deterioration*

- All conditions of Permit R14-026M are applicable and are to be incorporated into the Title V Permit.
  Affected Sources: Facility-Wide

<u>Series 14 Compliance Status:</u>
All sources subject to Series 14 are currently in compliance with all requirements of the Permit R14-026M.

SERIES 16 - 45CSR16 Standards of Performance for New Stationary Sources

- The state incorporates by reference the provision of 40 CFR Parts 60 and 65.

SERIES 30 - *45CSR30 Requirements for Operating Permits*

The Title V Permit shall incorporate all applicable sections of Series 30 including the sections below which are specifically listed to address the Plant's compliance.

45CSR§30-5 Permit Content

- The Plant is required to submit semiannual reports of any required monitoring on or before September 15 for the reporting period January 1 to June 30 and on or before March 15 for the reporting period July 1 to December 31. All instances of deviation from permit requirements must be clearly identified in such reports. All required reports must be certified by a responsible official consistent with 45CSR§30-4.4. [45CSR§30-5.1.c.3.A]
  Affected Sources: Facility-Wide

45CSR§30-8 Fees

- The Plant is required to a submit a Certified Emission Statement from a responsible official by July 1 of each year and pay Title V Operating Permit Fees for all stationary sources based on an accurate accounting of the actual emissions of all regulated air pollutants from the most recent calendar year. [45CSR§30-8.7]
  Affected Sources: Facility-Wide

<u>Series 30 Compliance Status:</u>
All sources subject to Series 30 are currently in compliance with all regulations listed above.

SERIES 34 - *45CSR34 Emission Standards for Hazardous Air Pollutants*

- The state incorporates by reference the provision of 40 CFR Parts 61, 63, and 65.

TABLE I-1 - REGULATORY APPLICABILITY

P=point F=Fugitive	PSD Permit EP ID	CD Description	EU ID	EU Description	Applicable Regulation*
GROUP 1 - Quarrying and Crushing					
F	EP0X.01		EP0X.01	Quarry drilling	N/A
F	EP0X.02		EP0X.02	Quarry blasting	N/A
F	EP0X.03.01		EP0X.03.01	Loader to truck (good rock)	N/A
F	EP0X.03.02		EP0X.03.02	Loader to truck (waste rock)	N/A
F	EP0X.03.03		EP0X.03.03	Truck to waste pile	N/A
F	EP37.02.01		EP37.02.01	Truck to large bin	NSPS Subpart OOO
F	EP37.02.02		EP37.02.02	Large bin to conveyor	NSPS Subpart OOO
P	CD37.03	New Primary Crusher D\C	EP37.03.01	Conveyor to feeder	NSPS Subpart OOO
P			EP37.03.02	Conveyor to Hammermill	
P			EP37.03.03	Hammermill to feeder	
P			EP37.03.04	Feeder to conveyor	
P	CD37.04	New Crushing System D\C1	EP37.04.01	Conveyor to split	NSPS Subpart OOO
P			EP37.04.02	Split to conveyor	
F	EP37.05		EP37.05	Split to surge pile	NSPS Subpart OOO
F	EP37.06		EP37.06	Limestone Crusher Feed Pile (For Finish Mills)	N/A
F	EP37.07		EP37.07	Limestone Crusher Feed Pile Reclaim	N/A
F	EP37.08		EP37.08	Limestone/Clinker Storage Pile (Quarry)	NESHAP Subpart LLL
F	EP37.09		EP37.09	Limestone/Clinker Reclaim from Quarry Storage Pile	N/A
F	EP37.10		EP37.10	Truck Dump to Craneway Storage Pile	N/A
F	EP37.11		EP37.11	Limestone/Clinker Storage Pile (Outside Craneway)	NESHAP Subpart LLL
F	EP37.12		EP37.12	Limestone/Clinker Transfer to Craneway Storage Building	NESHAP Subpart LLL
F	EP37.13		EP37.13	Clinker Transfer from Craneway to Truck	N/A
F	EP37.14		EP37.14	Limestone Dump to Mobile Crushers	NSPS Subpart OOO
F	EP37.15		EP37.15	Mobile Limestone Crushers Operations	NSPS Subpart OOO NSPS Subpart IIII
P	CD37.06	Premix Conveying D\C	EP37.06.01	Conveyor to split	NSPS Subpart OOO
P			EP37.06.02	Split to top conveyor	
P			EP37.06.03	Split to bottom conveyor	
P	CD38.01	Premix Storage Feeding D\C	EP38.01.01	Top conveyor to swing conveyor	NSPS Subpart OOO
P			EP38.01.02	Swing conveyor to Limestone pile	
GROUP 2 - Raw Material Preparation					
P	CD38.02	Premix Storage Discharge D\C	EP38.02.01	Pile to feeder1	NSPS Subpart OOO
P			EP38.02.02	Feeder1 to bottom conveyor	
P			EP38.02.03	Pile to feeder2	
P			EP38.02.04	Feeder2 to bottom conveyor	
P	CD39.05	Additive Delivery System D\C	EP39.05	Additives truck to conveyor	NSPS Subpart OOO
P			EP39.04.04	Conveyor to conveyor	
F	EP40.03		EP40.03	Split to (surge)pile	NSPS Subpart OOO
P	CD39.01	Additive Feeding System D\C	EP39.01.01	Conveyor to split	NSPS Subpart OOO
P			EP39.01.02	Split to conveyor	
P			EP39.03.02	Conveyor to shale bin	
P			EP39.04.01	Conveyor to shale bin 2	
P			EP39.07.01	Split to pyrite silo	
P			EP39.08.01	Split to sand silo	
P	CD39.02	Limestone Bin D/C	EP39.03.01	Conveyor to limestone mix bin	NSPS Subpart OOO
P	CD39.03	Raw Material Discharge D\C 1	EP39.03.03	Shale bin to feeder	NESHAP Subpart LLL
P			EP39.03.04	Shale bin feeder to conveyor	
P			EP39.02.01	Limestone mix bin to feeder	
P			EP39.02.02	Limestone mix feeder to conveyor	
P			EP39.08.02	Sand silo to feeder	
P			EP39.08.03	Sand silo feeder to conveyor	
P			EP39.07.02	Pyrite silo to feeder	
P			EP39.07.03	Pyrite silo feeder to conveyor	
P	CD39.04	Raw Material Discharge D\C 2	EP39.04.02	Shale silo 2 to feeder	NESHAP Subpart LLL
P			EP39.04.03	Shale silo 2 feeder to conveyor	
P	CD39.06	Raw Mill Feeding D\C	EP39.06.01	Raw Mill Feed Conveyor	NESHAP Subpart LLL
P	CD40.01	Raw Mill High Zone D\C	EP40.01.01	RM Feed Conveyor to conveyor	NESHAP Subpart LLL
P			EP40.01.02	Conveyor to split	
P			EP40.01.03	Split to hopper	
P			EP40.02.03	Elevator to conveyor	
P			EP40.04.01	Split to Raw Mill	

TABLE I-1 - REGULATORY APPLICABILITY

P=point F=Fugitive	PSD Permit EP ID	CD Description	EU ID	EU Description	Applicable Regulation*
P	CD40.02	Raw Mill Low Zone D\C	EP40.02.01	Conveyor to split	NESHAP Subpart LLL
P			EP40.02.02	Split to bucket elevator	
P			EP40.04.02	Raw Mill to conveyor	
P			EP40.02.04	Conveyor to bucket elevator	
P	CD40.05	Raw Meal Air Slide D\C	EP40.05	Raw Meal Conveying Equipment	NESHAP Subpart LLL
P	CD40.06	Homo Silo Feeding D\C	EP40.06	Homogenizing Silo Feeding Equipment	NESHAP Subpart LLL
P	CD40.07	Homo Silo Discharge D\C	EP40.07	Homogenizing Silo Discharging Equipment	NESHAP Subpart LLL
P	CD40.08	Top of Homo Silo D\C	EP40.08	Top of Homogenizing Silo	NESHAP Subpart LLL
F	EP39.07.04		EP39.07.04	Inert Raw Material Hauling to Quarry (Paved)	N/A
F	EP39.07.05		EP39.07.05	Inert Raw Material Hauling to Quarry (Unpaved)	N/A
F	EP39.08		EP39.08	Inert Raw Material Truck Dump to Pile	N/A
F	EP39.09		EP39.09	Inert Raw Material Storage Pile (Within Mines)	NESHAP Subpart LLL
F	EP39.10		EP39.10	Inert Raw Material Pile Reclaim	NSPS Subpart OOO
F	EP39.11		EP39.11	Inert Raw Material Dump to Primary Crusher	NSPS Subpart OOO
F	EP39.12.01		EP39.12.01	Hauling to Additives Unloading Bin (paved)	N/A
F	EP39.12.02		EP39.12.02	Hauling to Additives Unloading Bin (unpaved)	N/A
F	EP39.14		EP39.14	Additives dump to pile within Additives Storage Building	NSPS Subpart OOO
F	EP39.15		EP39.15	Additives Storage Building (4 piles)	NSPS Subpart OOO
F	EP39.16		EP39.16	Reclaim from additives piles	NSPS Subpart OOO
GROUP 3 - Pyroprocessing					
P	CD41.04	Alternate Fuel Feeding System D/C	EP41.04	Alternate Fuel Feeding System	NESHAP Subpart LLL
P	CD41.05	Alternate Fuel Dosing System D/C	EP41.05	Alternate Fuel Dosing System	NESHAP Subpart LLL
P	CD42.02	Kiln Feeding Bucket Elevator D\C	EP42.02	Kiln Feeding Bucket Elev DC	NESHAP Subpart LLL
P	CD42.03	Kiln Feeding D\C 1	EP42.03	Kiln Feed Belt	NESHAP Subpart LLL
P	CD42.05	Kiln Feeding D\C 2	EP42.05	Kiln Feed Belt	NESHAP Subpart LLL
P	CD42.04	Inline Raw Mill / PH/PC Kiln / Clinker Cooler & Bypass & Coal Mill D\Cs	EP42.04	Kiln System - Inline Raw Mill / PH/PC Kiln / Clinker Cooler	NESHAP Subpart LLL
P			EP42.08	Kiln Bypass Baghouse DC	NESHAP Subpart LLL
P			EP41.03.01	Coal Mill	NESHAP Subpart LLL
P	CD42.01	Kiln Bypass Dust D\C	EP42.01	Cement Fringe Bin	NESHAP Subpart LLL
P	CD42.06	Lime Storage D\C	EP42.06	Lime Storage for Scrubber System	NESHAP Subpart LLL
P	CD42.07	Bypass Truck Spout Dedusting	EP42.07	Bypass Truck Spout Dedusting	NESHAP Subpart LLL
GROUP 4 - Clinker Handling and Storage					
P	CD43.03	Clinker Storage Feeding D\C	EP43.05	Clinker conveyor to big clinker silo	NESHAP Subpart LLL
P	CD43.19	Top of LA Clinker Silo DC	EP43.19	Top of LA Clinker Silo	NESHAP Subpart LLL
P	CD43.20	Normal Clinker Bin at Pan Conveyor 73 DC	EP43.20	Normal Clinker Bin at Pan Conveyor 73	NESHAP Subpart LLL
P	CD43.21	Top of Normal Clinker Silo DC	EP43.21	Top of Normal Clinker Silo	NESHAP Subpart LLL
P	CD43.04	Small Clinker Storage Feeding D\C	EP43.04	Clinker conveyor to clinker silo	NESHAP Subpart LLL
P	CD43.06	Small Clinker Storage Discharge D\C	EP43.06.01	Low Alkali Clinker Silo to upper conveyors	NESHAP Subpart LLL
P			EP43.06.02	Upper conveyors to lower conveyor	NESHAP Subpart LLL
P			EP43.06.03	Low Alkali Clinker silo to lower conveyor	NESHAP Subpart LLL
P	CD43.07	Clinker Storage Discharge D\C	EP43.07.01	Big clinker silo to upper conveyor1	NESHAP Subpart LLL
P			EP43.07.02	Big clinker silo to upper conveyor2	NESHAP Subpart LLL
P			EP43.07.03	Big clinker silo to lower conveyor	NESHAP Subpart LLL
P			EP43.07.04	Big clinker silo to short conveyor	NESHAP Subpart LLL
P			EP43.07.05	Short conveyor to lower conveyor	NESHAP Subpart LLL
P	CD43.08	Finish Mill Conveying D\C1	EP43.08	Upper conveyor 1 to FM feed hoppers belt	NESHAP Subpart LLL
P	CD43.09	Finish Mill Conveying D\C2	EP43.09	Lower conveyor to FM feed hoppers belt	NESHAP Subpart LLL
P	CD43.13	Finish Mill Conveying D\C3	EP43.13	Upper conveyor 2 to FM feed hoppers belt	NESHAP Subpart LLL
GROUP 5 - Fuel Handling					
F	EP15.01.01	-	EP15.01.01	Rail unloading to petcoke hopper	NSPS Subpart Y
F	EP15.01.02	-	EP15.01.02	Petcoke hopper to feeders	NSPS Subpart Y
F	EP41.01.01	-	EP41.01.01	Petcoke feeders to conveyor	NSPS Subpart Y
F	EP41.01.02	-	EP41.01.02	Petcoke Conveyor to split to conveyor	NSPS Subpart Y
F	EP41.01.03	-	EP41.01.03	Petcoke Conveyor to CSH fuel bins or pile	NSPS Subpart Y
F	EP41.01.04	-	EP41.01.04	Coal Truck unloading to storage hall	NSPS Subpart Y
F	EP41.01.05	-	EP41.01.05	Clam bucket to coal pile	NSPS Subpart Y
F	EP41.01.06	-	EP41.01.06	Pile to clam bucket	NSPS Subpart Y
F	EP41.01.07	-	EP41.01.07	Clam bucket to CSH fuel bins	NSPS Subpart Y
F	EP41.02.01	-	EP41.02.01	CSH fuel bins to feeders	NSPS Subpart Y

TABLE I-1 - REGULATORY APPLICABILITY

P=point F=Fugitive	PSD Permit EP ID	CD Description	EU ID	EU Description	Applicable Regulation*
F	EP41.02.02	-	EP41.02.02	Feeders to conveyor	NSPS Subpart Y
F	EP41.02.03	-	EP41.02.03	Conveyor to split to conveyor	NSPS Subpart Y
F	CD42.04	-	EP41.02.04	Conveyor to Coal Mill	NESHAP Subpart LLL
GROUP 6 - Cement Production					
P	CD43.14	Finish Mill 1 & 2 Hoppers D\C	EP43.14	Conveyor to clinker feeding hoppers (FM1 &2)	NESHAP Subpart LLL
			EP43.15	Conveyor to lower conveyor (FM3)	
P	CD43.16	Finish Mill 3 Hopper D\C	EP43.16	Lower conveyor to clinker feeding hopper (FM3)	NESHAP Subpart LLL
P	CD43.17	Normal Clinker Bin - Bin Vent	EP43.17	Normal Clinker Bin - Bin Vent	NESHAP Subpart LLL
F	EP26.06.03	-	EP26.06.03	Gypsum/Synthetic Gypsum truck unloading to storage hall	NESHAP Subpart LLL
F	EP26.06.04	-	EP26.06.04	Clam bucket to gypsum/synthetic gypsum pile	NESHAP Subpart LLL
F	EP26.06.05	-	EP26.06.05	Gypsum/synthetic gypsum pile to clam bucket	NESHAP Subpart LLL
F	EP26.06.06	-	EP26.06.06	Clam bucket to gypsum/synthetic gypsum bin (FM1/2/3)	NESHAP Subpart LLL
F	EP26.07.01	-	EP26.07.01	Limestone Pile to clam bucket	NESHAP Subpart LLL
F	EP26.07.02	-	EP26.07.02	Clam bucket to limestone bin (FM1/2/3)	NESHAP Subpart LLL
F	EP27.01	-	EP27.01	Conveyor to clinker hopper	NESHAP Subpart LLL
F	EP27.02	-	EP27.02	Clinker hopper to crane	NESHAP Subpart LLL
F	EP27.03	-	EP27.03	Crane to clinker pile	NESHAP Subpart LLL
F	EP27.04	-	EP27.04	Clinker pile to crane	NESHAP Subpart LLL
F	EP27.05	-	EP27.05	Crane to clinker bins (FM1/2/3)	NESHAP Subpart LLL
F	EP27.06		EP27.06	Transfer to Outdoor Clinker Storage Pile	NESHAP Subpart LLL
F	EP27.07		EP27.07	Outdoor Clinker Storage Pile - Tarped	NESHAP Subpart LLL
F	EP27.08		EP27.08	Outdoor Clinker Storage Pile Reclaim	NESHAP Subpart LLL
P	CD44.01	Finish Mill 2 Feeding D\C1	EP44.01	L.A. clinker bin to FM2 conveyor	NESHAP Subpart LLL
P	CD44.02	Finish Mill 1 Feeding D\C1	EP44.02	Clinker bin to FM1 conveyor	NESHAP Subpart LLL
P	CD44.03	Finish Mill 2 Feeding D\C2	EP44.03	Clinker bin to FM2 conveyor	NESHAP Subpart LLL
P	CD44.04	Finish Mill 2 Feeding D\C3	EP44.04.01	Limestone bin to FM2 conveyor	NESHAP Subpart LLL
P			EP44.04.02	Gypsum/synthetic gypsum bin to FM2 conveyor	NESHAP Subpart LLL
P	CD44.05	Finish Mill 1 Feeding D\C 2	EP44.05.01	Limestone bin to FM1 conveyor	NESHAP Subpart LLL
P			EP44.05.02	Gypsum/synthetic gypsum bin to FM1 conveyor	NESHAP Subpart LLL
P	CD19.02	Finish Mill 3 Baghouse D\C	EP19.01Pb	No. 3 Finish Mill Separator (Existing FM 10)	NESHAP Subpart LLL
F	CD19.01	Finish Mill 3 Norblo D\C	EP19.01U	FM3 Feed bins to feeders	NESHAP Subpart LLL
P			EP19.01Pa.01	FM3 Feeders to belt conveyor 650	NESHAP Subpart LLL
P			EP19.01Pa.02	Belt conveyor 650 to FM3	NESHAP Subpart LLL
P			EP19.02	Finish Mill 3	NESHAP Subpart LLL
P	CD44.06	Finish Mill 1 Conveying D\C	EP44.06	FM1 Conveyor to conveyor	NESHAP Subpart LLL
P	CD44.07	Finish Mill 1 High Zone D\C	EP44.07.01	Elevator to FM1 conveyor	NESHAP Subpart LLL
P			EP44.07.02	FM1 Conveyor to bin	NESHAP Subpart LLL
P			EP44.07.03	Conveyor to Finish Mill 1	NESHAP Subpart LLL
P	CD44.08	Finish Mill 1 Low Zone D\C	EP44.08.01	Finish Mill 1 to Conveyor	NESHAP Subpart LLL
P			EP44.08.02	Bin to FM1 conveyor	NESHAP Subpart LLL
P			EP44.08.03	FM1 Conveyor to bucket elevator	NESHAP Subpart LLL
P	CD44.09	Finish Mill 1 D\C	EP44.09	Finish Mill 1	NESHAP Subpart LLL
P	CD44.13	Finish Mill 1 Discharge D\C	EP44.13	Finish Mill 1 Conveying	NESHAP Subpart LLL
P	CD44.14	Finish Mill 2 Conveying D\C	EP44.14	FM2 Conveyor to conveyor	NESHAP Subpart LLL
P	CD44.10	Finish Mill 2 High Zone D\C	EP44.10.01	FM2 Elevator to conveyor	NESHAP Subpart LLL
P			EP44.10.02	FM2 Conveyor to bin	NESHAP Subpart LLL
P			EP44.10.03	Conveyor to Finish Mill 2	NESHAP Subpart LLL
P	CD44.11	Finish Mill 2 Low Zone D\C	EP44.11.01	Finish Mill 2 to conveyor	NESHAP Subpart LLL
P			EP44.11.02	Bin to FM2 conveyor	NESHAP Subpart LLL
P			EP44.11.03	FM2 Conveyor to bucket elevator	NESHAP Subpart LLL
P	CD44.12	Finish Mill 2 D\C	EP44.12	Finish Mill 2	NESHAP Subpart LLL
P	CD44.15	Finish Mill 2 Discharge D\C	EP44.15	Finish Mill 2 Conveying	NESHAP Subpart LLL
P	CD44.16	Finish Mill 1/2 Air Heater	EP44.16	Finish Mill 1/2 Air Heater	NESHAP Subpart LLL
P	CD44.17	Finish Mills Reject Bin	EP44.17	Finish Mills Reject Bin	NESHAP Subpart LLL
P	CD44.18	Finish Mill 1 Reject Elevator High Zone DC	EP44.18	Finish Mill 1 Reject Elevator High Zone	NESHAP Subpart LLL
P	CD44.19	Finish Mill 2 Reject Elevator High Zone DC	EP44.19	Finish Mill 2 Reject Elevator High Zone	NESHAP Subpart LLL
GROUP 7 - Shipping					
P	CD45.01	Finish Mill 1 Airslides D\C	EP45.01	Finish Mill 1 airslides	NESHAP Subpart LLL
P	CD45.02	Finish Mill 2 Airslides D\C	EP45.02	Finish Mill 2 airslides	NESHAP Subpart LLL
P	CD45.03	Cement Silos Feeding D\C1	EP45.03	Finish Mill 1 to cement silos	NESHAP Subpart LLL
P	CD45.04	Cement Silos Feeding D\C2	EP45.04	Finish Mill 2 to cement silos	NESHAP Subpart LLL
P	CD45.05	Cement Silo A1 & A2 D\C	EP45.05	Cement Silo A1 & A2	NESHAP Subpart LLL

TABLE I-1 - REGULATORY APPLICABILITY

P=point F=Fugitive	PSD Permit EP ID	CD Description	EU ID	EU Description	Applicable Regulation*
P	CD45.06	Cement Silo B1 & B2 D\C	EP45.06	Cement Silo B1 & B2	NESHAP Subpart LLL
P	CD45.07	Cement Silo C1 & C2 D\C	EP45.07	Cement Silo C1 & C2	NESHAP Subpart LLL
P	CD45.08	Truck Loadout 1 D\C	EP45.08	Bulk lane loadout 1	NESHAP Subpart LLL
P	CD45.09	Truck Loadout 2 D\C	EP45.09	Bulk lane loadout 2	NESHAP Subpart LLL
P	CD45.10	Truck Loadout 3 D\C	EP45.10	Bulk lane loadout 3	NESHAP Subpart LLL
P	CD45.11	Truck Loadout 4 D\C	EP45.11	Bulk lane loadout 4	NESHAP Subpart LLL
P	CD45.14	Cement Analyzer D\C	EP45.14	Cement Analyzer	NESHAP Subpart LLL
P	CD45.15	Transfer Airslide D\C at the Multi Cell	EP45.15	Transfer Airslide at the Multi Cell	NESHAP Subpart LLL
P	CD45.16	Rail Transloader D\C	EP45.16	Rail Transloader	NESHAP Subpart LLL NSPS Subpart IIII
P	CD21.05	Middle Bank Silos 1 D\C	EP21.05	Middle Bank Silos 1 DC	NESHAP Subpart LLL
P	CD21.06	Middle Bank Silos 2 D\C	EP21.06	Middle Bank Silos 2 DC	NESHAP Subpart LLL
P	CD21.07	Middle Bank Silos 3 D\C	EP21.07	Middle Bank Silos 3 DC	NESHAP Subpart LLL
P	CD21.08	Middle Bank Silos 4 D\C	EP21.08	Middle Bank Silos 4 DC	NESHAP Subpart LLL
P	CD21.09	Middle Bank Silos 5 D\C	EP21.09	Middle Bank Silos 5 DC	NESHAP Subpart LLL
P	CD21.10	Middle Bank Vent 1 D\C	EP21.10	Middle Bank Bin Vent 1 - Silos Inlet	NESHAP Subpart LLL
P	CD21.11	Middle Bank Vent 2 D\C	EP21.11	Middle Bank Bin Vent 2 - Silos Inlet	NESHAP Subpart LLL
P	CD21.12	Middle Bank Vent 3 D\C	EP21.12	Middle Bank Bin Vent 3 - Silos Discharge	NESHAP Subpart LLL
P	CD21.13	Middle Bank Vent 4 D\C	EP21.13	Middle Bank Bin Vent 4 - Silos Discharge	NESHAP Subpart LLL
P	CD45.12	Rail Loadout 1 D\C	EP45.12	Bulk rail loadout 1	NESHAP Subpart LLL
P	CD45.13	Rail Loadout 2 D\C	EP45.13	Bulk rail loadout 2	NESHAP Subpart LLL
P	CD46.01	Truck Loadout Silo 1 D\C	EP46.01	Truck Loadout Silo 1	NESHAP Subpart LLL
P	CD46.02	Truck Loadout Silo 2 D\C	EP46.02	Truck Loadout Silo 2	NESHAP Subpart LLL
P	CD46.03	Truck Loadout Silo 3 D\C	EP46.03	Truck Loadout Silo 3	NESHAP Subpart LLL
P	CD46.04	Truck Loadout Silo 4 D\C	EP46.04	Truck Loadout Silo 4	NESHAP Subpart LLL
P	CD46.05	Truck Loadout Silo 5 D\C	EP46.05	Truck Loadout Silo 5	NESHAP Subpart LLL
P	CD46.06	Truck Loadout 5 D\C	EP46.06	Bulk loadout 5 - Truck Loadout Silos	NESHAP Subpart LLL
P	CD46.07	Truck Loadout 6 D\C	EP46.07	Bulk loadout 6 - Truck Loadout Silos	NESHAP Subpart LLL
P	CD20.04	East Bank Silos 1 D\C	EP20.04	East Bank Silos 1	NESHAP Subpart LLL
P	CD20.05	East Bank Silos 2 D\C	EP20.05	East Bank Silos 2	NESHAP Subpart LLL
P	CD20.06	East Bank Silos 3 D\C	EP20.06	East Bank Silos 3	NESHAP Subpart LLL
P	CD48.01	Packhouse D\C	EP48.01	Packhouse	NESHAP Subpart LLL
P	CD23.01	N.E. PACKER D/C	EP23.01	Packer #1 N.E.	NESHAP Subpart LLL
P	CD22.05	West Bank Silo #70/71 D\C	EP22.05	West Bank Silo #70/71	NESHAP Subpart LLL
P	CD22.06	West Bank Silo #72 D\C	EP22.06	West Bank Silo #72	NESHAP Subpart LLL
P	CD22.07	West Bank Silo #84 D\C	EP22.07	West Bank Silo #84	NESHAP Subpart LLL
P	CD22.08	West Bank Silos Loadout Spout I	EP22.08	West Bank Silos Loadout Spout	NESHAP Subpart LLL
GROUP 8 - Miscellaneous (All Piles, Roads, Fly Ash and Bypass Dust Sources)					
P	CD31.01	Flyash Tank No.1 D\C	EP31.01	Fly Ash Tank #1	NESHAP Subpart LLL
P	CD31.02	Bypass Dust Tank D\C	EP31.02	Bypass Dust Tank	NESHAP Subpart LLL
P	CD31.03	Bypass Dust Loadout D\C	EP31.03	Bypass Dust silo/loadout	NESHAP Subpart LLL
P	CD22.09	Dry Flyash Bin D\C	EP22.09	Dry Flyash Bin	NESHAP Subpart LLL
P	EP0B.01	Administrative Boiler 1	EP0B.01	Administrative Boiler 1	N/A
P	EP0B.02	Administrative Boiler 2	EP0B.02	Administrative Boiler 2	N/A
P	EP0G.01	Emergency Generator	EP0G.01	Emergency Generator	N/A
F	EP0X.05		EP0X.05	Quarry waste pile	N/A
F	EP0X.06		EP0X.06	New Crusher feed pile	N/A
F	EP03.01		EP03.01	Stone Storage Bays - (5 piles)	N/A
F	EP26.05		EP26.05	Gypsum/Synthetic Gypsum storage pile (Craneway)	N/A
F	EP26.08		EP26.08	Limestone Storage pile (Craneway)	N/A
F	EP15.04.03		EP15.04.03	Coal storage pile (Craneway)	NSPS Subpart Y
F	EP15.04.04		EP15.04.04	Petcoke Storage Pile (Craneway)	NSPS Subpart Y
F	EP14.08		EP14.08	Clinker stockpile (Craneway)	NESHAP Subpart LLL
F	EP25.01		EP25.01	Quarry haul roads (new crusher)	N/A
F	EP25.03		EP25.03	Quarry haul roads (waste)	N/A
F	EP25.05.01		EP25.05.01	Additive trucks (unpaved)	N/A
F	EP25.05.02		EP25.05.02	Additive trucks (paved)	N/A
F	EP25.14		EP25.14	Gypsum/Synthetic Gypsum haul road (unpaved)	N/A
F	EP25.12		EP25.12	Gypsum/Synthetic Gypsum haul road (paved)	N/A
F	EP25.04.02		EP25.04.02	Cement shipments	N/A
F	EP25.06.01		EP25.06.01	Fuel deliveries (unpaved)	N/A
F	EP25.06.02		EP25.06.02	Fuel deliveries (paved)	N/A
F	EP25.09.01		EP25.09.01	Dry Flyash trucks (For Cement) (unpaved)	N/A
F	EP25.09.02		EP25.09.02	Dry Flyash trucks (For Cement) (paved)	N/A

TABLE I-1 - REGULATORY APPLICABILITY

P=point F=Fugitive	PSD Permit EP ID	CD Description	EU ID	EU Description	Applicable Regulation*
F	EP25.09.03		EP25.09.03	Dry Flyash trucks (For Calciner) (unpaved)	N/A
F	EP25.09.04		EP25.09.04	Dry Flyash trucks (For Calciner) (paved)	N/A
F	EP25.10.01		EP25.10.01	Waste dust customer trucks (unpaved)	N/A
F	EP25.10.02		EP25.10.02	Waste dust customer trucks (paved)	N/A
F	EP25.08		EP25.08	Misc. plant vehicles (unpaved)	N/A
F	EP25.07		EP25.07	Waste dust trucks (unpaved)	N/A
F	EP42.06.01		EP42.06.01	Lime deliveries (unpaved)	N/A
F	EP42.06.02		EP42.06.02	Lime deliveries (paved)	N/A
F	EP25.15		EP25.15	Alternate Fuel Trucks (paved)	N/A
F	EP25.16		EP25.16	Hauling Clinker to Primary Crusher (Paved)	N/A
F	EP25.17		EP25.17	Hauling Clinker to Primary Crusher (Unpaved)	N/A
F	EP25.18		EP25.18	Hauling Limestone/Clinker from Quarry to Craneway (Unpaved)	N/A
F	EP25.19		EP25.19	Hauling Limestone/Clinker from Quarry to Craneway (Paved)	N/A
F	EP50.01		Tank 56	Quarry Diesel Tank	N/A
F	EP50.02		Tank 73	Light Oil Tank	N/A
F	EP50.03		Tank 74	Grinding Aid Tank	N/A
F	EP50.04		Tank 75	Air Entrainment Tank	N/A
F	EP50.05		Tank U8	Waste Oil Tank (horizontal)	N/A

* All sources listed as subject to NESHAP Subpart LLL are also subject to NSPS Subpart F.

ATTACHMENT J – TITLE V PERMIT LANGUAGE CHANGES

As part of this Application, the Plant conducted a detailed review of all conditions within the draft Part 70 Operating Permit (Permit No. R30-00300006-2012 (MM05 and MM06)), which was submitted for EPA comment on June 24, 2016. This attachment identifies all changes that the Plant believes should be made to existing conditions within the Part 70 Operating Permit in order to correct errors or omissions. Attachment J also requests the incorporation of applicable monitoring requirements from Consent Order CO-R7-E-2016-6, issued to the Plant on April 8, 2016. This attachment is intended to assist WV DEP with updating the Part 70 Operating Permit.

Attachment J – Title V Permit Language Changes

The following provides a list of all changes requested as part of this Title V Operating Permit Renewal Application to the draft Title V Operating Permit R30-00300006-2012 (MM05 and MM06), which was submitted for EPA comment on June 24, 2016. This list also includes incorporating applicable monitoring requirements from Consent Order CO-R7-E-2016-6, issued to the Plant on April 8, 2016, into the next draft of the Title V Operating Permit. Language deletions are in red font and language additions are in blue font.

1.1. Emission Units

- On page 10, make the following changes:

CD42.07	Bypass Truck Spout Dedusting	2009	294 dscfm	CD42.07			N/A
EP42.07	Bypass Truck Spout Dedusting	2009	N/A	CD42.07			Baghouse

- On page 10 add the following row prior to the row for CD43.21:

EP43.21	Top of Normal Clinker Silo	2013	2,212,890 TPY	CD43.21			Baghouse

- On page 10 add the following row prior to the row for CD43.19:

EP43.19	Top of LA Clinker Silo	2013	2,212,890 TPY	CD43.19			Baghouse

- On page 12, make the following changes:

EP43.14	Conveyor (FM FHB) to clinker feeding hoppers (CFH1/2) (FM 1&2)	2009	2,212,890 TPY	CD43.14 ~~CD43.20~~		FM FHB to CFH1/2	Baghouse
EP43.15	Conveyor (FM FHB) to lower conveyor (LC2) (FM3)	2009	2,212,890 TPY	CD43.14 ~~CD43.20~~		FM FHB to LC2	Baghouse
CD43.14	Finish Mill 1 & 2 Hoppers D\C	2009	5,297 dscfm				N/A
EP43.20	Normal Clinker Bin at Pan Conv. 73	2013	2,212,890 TPY	CD43.20			Baghouse
CD43.20	Normal Clinker Bin at Pan Conv. 73 D/C	2013	9,500 dscfm				N/A
EP43.16	Lower conveyor (LC2) to clinker feeding hopper (CFH3) (FM3)	2009	2,212,890 TPY	CD43.16		LC2 to CFH3	Baghouse
CD43.16	Finish Mill 3 Hopper D\C	2009	5,297 dscfm				N/A
EP43.17	Normal Clinker Bin-Bin Vent	2010	2,212,890 TPY	CD43.17			Baghouse
CD43.17	Normal Clinker Bin-Bin Vent D\C	2010	2,793 dscfm			Clinker to Clinker Bin	N/A

- On page 14 add the following row prior to the row for CD44.18:

EP44.18	Finish Mill 1 Reject Elevator High Zone	2013	1,839,600 TPY	CD44.18			Baghouse

- On page 14 add the following row prior to the row for CD44.19:

EP44.19	Finish Mill 2 Reject Elevator High Zone	2013	1,839,600 TPY	CD44.19			Baghouse

- On page 15 add the following row prior to the row for CD44.17:

EP44.17	Finish Mills Reject Bin	2011		CD44.17			Baghouse

3.1.19. If your source is an existing or new raw or finish mill, your emission limit is ten percent (10%) opacity.
[45CSR34, 40 C.F.R. §63.1343(b)(1) Table 1, Row ~~16~~19, Finish Mill #10, 45CSR14, R14-026, B.10., 40 C.F.R. §60.62(c), 45CSR16, EU2 and EU6]

3.1.20. The owner or operator of each new or existing raw material, clinker, or finished product storage bin; conveying system transfer point; bagging system; and bulk loading or unloading system, at a facility which is a major source subject to the provisions of 40 C.F.R. Part 63 Subpart LLL shall not cause to be discharged any gases from these affected sources which exhibit opacity in excess of ten percent.
[45CSR34, 40 C.F.R. §63.1345, 45CSR14, R14-026, B.10., 40 C.F.R. §60.62(c), 45CSR16, EU2, EU3, EU4, EU6, EU7, CD31.01, CD31.02, CD31.03, CD22.09]

3.1.22. In accordance with 40 C.F.R. §63.1351(c), the compliance date for existing sources for all requirements which became effective ~~November 8, 2010~~February 12, 2013 will be September 9, ~~2013~~2015. The permittee shall comply with all applicable amended requirements for existing sources under 40 C.F.R. 63, Subpart LLL - "National Emission Standards for Hazardous Air Pollutants From the Portland Cement Manufacturing Industry" no later than September 9, ~~2013~~2015 or a new compliance date set by U.S. EPA. The permittee shall submit a Notification of Compliance Status (NOCS) and a complete application for a significant modification of this Title V permit to incorporate the specific requirements of 40 C.F.R. 63, Subpart LLL in the operating permit on or prior to the 60th day following the completion of the relevant compliance demonstration activity specified in 40 C.F.R. 63 Subpart LLL.

Operating Mode: Normal Operation

Pollutant	Existing Source Kilns
Mercury	55 pounds per million tons of clinker, averaged over 30 days
Total Hydrocarbons	24 parts per million by volume (ppmv), averaged over 30 days, measured as propane. Or meet an alternative limit of 12 ppmvd for total organic HAP.
Particulate Matter (as a surrogate for toxic metals other than mercury)	~~0.04~~0.07 pounds per ton of clinker, averaged over 30 days
Hydrochloric acid (major sources only)	3 ppmv, averaged over 30 days

Operating Mode: Startup and Shutdown. The permittee shall comply with the work practice standards of 40 C.F.R. § ~~63.1346(f).~~63.1346(g).

~~Pollutant~~	~~Existing Source Kilns~~
~~Mercury~~	~~10 ug/dscm~~
~~Total Hydrocarbons~~	~~24 ppmvd (measured as propane)~~
~~Particulate Matter~~	~~0.004 gr/dscf~~
~~Hydrochloric acid~~	~~3 ppmvd (If the kiln does not have a HCl CEM, the emissions limit is zero.)~~

[45CSR34; 40 C.F.R. §§ 63.6(c), 63.1351(c), 63.1353(b)(5), 63.1343(b)(1), Table 1, Rows 1, ~~2,~~ 3, 4, 5, and 6 ~~and 4~~, and 63.9(h)(2)(i) *and* (ii)]

3.1.25. **Initial Compliance Requirements for D/F.**

(i) If you are subject to limitations on D/F emissions under 40 C.F.R. §63.~~1343(e)~~1343(b) (condition 4.1.5.(b)), you must demonstrate initial compliance with the D/F emissions standards by using the performance test methods and procedures in 40 C.F.R. §63.1349(b)(3) (condition 3.3.3.(3)). The owner or operator of a kiln with an in-line raw mill must demonstrate initial compliance by conducting separate performance tests while the raw mill is operating and the raw mill is not operating. The D/F concentration must be determined for each run and the arithmetic average of the concentrations measured for the three runs must be calculated to determine compliance.

(ii) If you are subject to a D/F emission limitation under 40 C.F.R. §63.~~1343(e)~~1343(b) (condition 4.1.5.(b)), you must demonstrate initial compliance with the temperature operating limits specified in 40 C.F.R. §63.1346 by using the performance test methods and procedures in 40 C.F.R. §63.1349(b)(3)(ii) through (b)(3)(iv) (conditions 3.3.3.(3)(i) through (iv)). The average of the run temperatures will determine the applicable temperature limit.

[45CSR34; 40 C.F.R. §63.1348(a)(3)]

3.2.1. The owner or operator of each portland cement plant shall prepare for each affected source subject to the provisions of 40 C.F.R. Part 63 Subpart LLL, a written operations and maintenance plan. The affected sources are the Raw Material Preparation (EU2), the Pyroprocessing (EU3), the Clinker Handling and Storage (EU4), the Cement Production (EU6), the Shipping (EU7), and the Other Miscellaneous Sources (EU8). The plan shall be submitted to the Administrator for review and approval as part of the application for a part 70 permit and shall include the following information:

(1) Procedures for proper operation and maintenance of the affected source and air pollution control devices in order to meet the emission limits and operating limits ~~of 40 C.F.R. §§ 63.1343 through 63.1348~~ including fugitive dust control measures for open clinker piles of §§63.1343, 63.1345, and 63.1346. Your operations and maintenance plan must address periods of startup and shutdown;

(2) Corrective actions to be taken when required by Section 3.2.4 [40 C.F.R. §63.1350(f)(3)];

(3) Procedures to be used during an inspection of the components of the combustion system of each kiln and each in line kiln raw mill located at the facility at least once per year.

Failure to comply with any provision of the operations and maintenance plan developed in accordance with 40 C.F.R. §63.1347 is a violation of the standard.

[45CSR34; 40 C.F.R. §§ 63.1347(a) and (b)]

(4) Procedures to be used to periodically monitor affected sources subject to opacity standards under Section 3.1.20 [40 C.F.R. §63.1345]. Such procedures must include the provisions of Section 3.2.1 (4) (i) through ~~(iv)~~(vii) [40 C.F.R. §§ 63.1350 ~~(a)(4)(i) through (a)(4)~~(f)(1)(i) through (f)(1)(vii)].

(i) The owner or operator must conduct a monthly ~~1 minute~~ 10-minute visible emissions test of each affected source in accordance with Method 22 of Appendix A to 40 C.F.R part 60 of Chapter I of Title 40. The test must be conducted while the affected source is in operation.

(ii) If no visible emissions are observed in six consecutive monthly tests for any affected source, the owner or operator may decrease the frequency of testing from monthly to semi-annually for that affected source. If visible emissions are observed during any semi-annual test, the owner or operator must resume testing of that affected source on a monthly basis and maintains that schedule until no visible emissions are observed in six consecutive monthly tests.

(iii) If no visible emissions are observed during the semi-annual test for any affected source, the owner or operator may decrease the frequency of testing from semi-annually to annually for that affected source. If visible emissions are observed during any annual test, the owner or operator must resume testing of that affected source on a monthly basis and maintains that schedule until no visible emissions are observed in six consecutive monthly tests.

(iv) If visible emissions are observed during any Method 22 test, the owner or operator must conduct ~~a 6-minute test of opacity~~ 30 minutes of opacity observations, recorded at 15-second intervals, in accordance with Method 9 of appendix A to part 60 of Chapter I of Title 40. The Method 9 test must begin within one hour of any observation of visible emissions.

(v) The requirement to conduct Method 22 visible emissions monitoring under this paragraph shall not apply to any totally enclosed conveying system transfer point, regardless of the location of the transfer point. "Totally enclosed conveying system transfer point" shall mean a conveying system transfer point that is enclosed on all sides, top, and bottom. The enclosures for these transfer points shall be operated and maintained as total enclosures on a continuing basis in accordance with the facility operations and maintenance plan.

(vi) If any partially enclosed or unenclosed conveying system transfer point is located in a building, the owner or operator of the portland cement plant shall have the option to conduct a Method 22 visible emissions monitoring test according to the requirements of Section 3.2.1 (4) (i) through (4) (iv) [40 C.F.R. §§ 63.1350 ~~(a)(4)(i) through (iv)~~ (f)(1)(i) through (f)(1)(iv)] for each such conveying system transfer point located within the building, or for the building itself, according to Section 3.2.1 (4) (vii) [40 C.F.R. § 63.1350 ~~(a)(4)~~ (f)(1)(vii)].

(vii) If visible emissions from a building are monitored, the requirements of Section 3.2.1 (4) (i) [40 C.F.R. § 63.1350 ~~(a)(4)~~ (f)(1)(i)] apply to the monitoring of the building, and you must also test visible emissions from each side, roof and vent of the building for at least ~~1 minute~~10-minutes. The test must be conducted under normal operating conditions.

~~*This condition 3.2.1(4) shall remain in effect until the compliance date specified in condition 3.1.22.*~~

[45CSR34, 40 C.F.R. §63.1350 (a), 45CSR14, R14-026, B.10., EU2, EU3, EU4, ~~EU5~~,EU6, EU7, EU8]

3.2.2. The PH/PC kiln, clinker cooler, and in-line raw mill vent to a common baghouse; the PH/PC kiln alkali bypass gas vents to its own separate baghouse; and the coal mill also vents to its own baghouse. All three of these baghouses then vent to a common main stack. The common main stack will house all applicable CEM ~~and COM~~ devices. Finish Mill #1 and Finish Mill #2 each vent to their own stack.

Continuous Compliance for Opacity
If you are subject to the limitations on opacity under 40 C.F.R. §63.1345 (condition 3.1.~~20~~.19), you

must demonstrate continuous compliance with the opacity emissions standards by using the monitoring methods and procedures in 40 C.F.R. §63.1350(f).

(ii) *COMS.* If you install a COMS in lieu of conducting the daily visible emissions testing, you must demonstrate continuous compliance by operating and maintaining the COMS such that it meets the requirements of 40 C.F.R. §63.1350(f)(4)(i).

If the owner or operator chooses to install a COMS in lieu of conducting the daily visual emissions testing required under paragraph (f)(2) of 40 C.F.R. §63.1350, then the COMS must be installed at the outlet of the PM control device of the raw mill or finish mill and the COMS must be installed, maintained, calibrated, and operated as required by the general provisions in subpart A of 40 C.F.R. part 63 and according to PS–1 of appendix B to 40 C.F.R. part 60.

[45CSR§30-12.7., 45CSR34, 40 C.F.R. §§ 63.1348(b)(3), 63.1348(b)(3)(ii) and 63.1350(f)(4)(i), 40 C.F.R. §60.64(b)(4), 45CSR16, 45CSR14, R14-026, B.10., ~~EP42.04~~ CD44.09, CD44.12]

3.2.8. The owner or operator of an affected source subject to a particulate matter standard under 40 C.F.R. § 63.1343 shall install, calibrate, maintain, and operate a particulate matter continuous emission monitoring system (PM CEMS) to measure the particulate matter discharged to the atmosphere. All requirements relating to installation, calibration, maintenance, operation or performance of the PM CEMS and implementation of the PM CEMS requirement are deferred pending further rulemaking.

[45CSR34, 40 C.F.R. § 63.1350(k), 45CSR14, R14-026, B.10., EP42.04] ~~*Note: This condition 3.2.8. shall remain in effect until the compliance date specified in condition 3.1.22.*~~

3.2.11. *Startup, shutdown, and malfunction plan.*

(i) Per Table 1 to Subpart LLL of Part 63, 40 CFR 63.6(e)(3) is no longer applicable to sources subject to Subpart LLL. As of September 9, 2015 the operations and maintenance plan must address periods of startup and shutdown.

~~(i) The owner or operator of an affected source must develop and implement a written startup, shutdown, and malfunction plan that describes, in detail, procedures for operating and maintaining the source during periods of startup, shutdown, and malfunction, and a program of corrective action for malfunctioning process and air pollution control and monitoring equipment used to comply with the relevant standard. This plan must be developed by the owner or operator by the source's compliance date for that relevant standard. The purpose of the startup, shutdown, and malfunction plan is to—~~

~~(A) Ensure that, at all times, the owner or operator operates and maintains each affected source, including associated air pollution control and monitoring equipment, in a manner which satisfies the general duty to minimize emissions established by 40 C.F.R. § 63.3 (e) (1) (i);~~

~~(B) Ensure that owners or operators are prepared to correct malfunctions as soon as practicable after their occurrence in order to minimize excess emissions of hazardous air pollutants; and~~

~~(C) Reduce the reporting burden associated with periods of startup, shutdown, and malfunction (including corrective action taken to restore malfunctioning process and air pollution control equipment to its normal or usual manner of operation).~~

~~(ii) During periods of startup, shutdown, and malfunction, the owner or operator of an affected source must operate and maintain such source (including associated air pollution control and monitoring equipment) in accordance with the procedures specified in the startup, shutdown, and malfunction plan developed under Section 3.2.11 (i) [40 C.F.R. § 63.3 (e) (3) (i)].~~

~~(iii) When actions taken by the owner or operator during a startup, shutdown, or malfunction (including actions taken to correct a malfunction) are consistent with the procedures specified in the affected source's startup, shutdown, and malfunction plan, the owner or operator must keep records for that event which demonstrate that the procedures specified in the plan were followed. These records may take the form of a "checklist," or other effective form of recordkeeping that confirms conformance with the startup, shutdown, and malfunction plan for that event. In addition, the owner or operator must keep records of these events as specified in 40 C.F.R. § 63.10 (b), including records of the occurrence and duration of each startup, shutdown, or malfunction of operation and each malfunction of the air pollution control and monitoring equipment. Furthermore, the owner or operator shall confirm that actions taken during the relevant reporting period during periods of startup, shutdown, and malfunction were consistent with the affected source's startup, shutdown and malfunction plan in the semiannual (or more frequent) startup, shutdown, and malfunction report required in 40 C.F.R. § 63.10 (d) (5).~~

~~(iv) If an action taken by the owner or operator during a startup, shutdown, or malfunction (including an action taken to correct a malfunction) is not consistent with the procedures specified in the affected source's startup, shutdown, and malfunction plan, and the source exceeds any applicable emission limitation in the relevant emission standard, then the owner or operator must record the actions taken for that event and must report such actions within 2 working days after commencing actions inconsistent with the plan, followed by a letter within 7 working days after the end of the event, in accordance with 40 C.F.R. § 63.10 (d) (5) (unless the owner or operator makes alternative reporting arrangements, in advance, with the Administrator).~~

~~(v) The owner or operator must maintain at the affected source a current startup, shutdown, and malfunction plan and must make the plan available upon request for inspection and copying by the Administrator. In addition, if the startup, shutdown, and malfunction plan is subsequently revised as provided in Section 3.2.11 (viii) [40 C.F.R. § 63.3 (e) (3) (viii)], the owner or operator must maintain at the affected source each previous (i.e., superseded) version of the startup, shutdown, and malfunction plan, and must make each such previous version available for inspection and copying by the Administrator for a period of 5 years after revision of the plan. If at any time after adoption of a startup, shutdown, and malfunction plan the affected source ceases operation or is otherwise no longer subject to the provisions of this part, the owner or operator must retain a copy of the most recent plan for 5 years from the date the source ceases operation or is no longer subject to this part and must make the plan available upon request for inspection and copying by the Administrator. The Administrator may at any time request in writing that the owner or operator submit a copy of any startup, shutdown, and malfunction plan (or a portion thereof) which is maintained at the affected source or in the possession of the owner or operator. Upon receipt of such a request, the owner or operator must promptly submit a copy of the requested plan (or a portion thereof) to the Administrator. The Administrator must request that the owner or operator submit a particular startup, shutdown, or malfunction plan (or a portion thereof) whenever a member of the public submits a specific and reasonable request to examine or to receive a copy of that plan or portion of a plan. The owner or operator may elect to submit the required copy of any startup, shutdown, and malfunction plan to the Administrator in an electronic format. If the owner or operator claims that any portion of such a startup, shutdown, and malfunction plan is confidential business information entitled to protection from disclosure under section 114(c) of the Clean Air Act or 40 CFR 2.301, the material which is claimed as confidential must be clearly designated in the submission.~~

~~(vi) To satisfy the requirements of this section to develop a startup, shutdown, and malfunction plan, the owner or operator may use the affected source's standard operating procedures (SOP) manual, or an Occupational Safety and Health Administration (OSHA) or other~~

~~plan, provided the alternative plans meet all the requirements of this section and are made available for inspection or submitted when requested by the Administrator.~~

~~(vii) Based on the results of a determination made under 40 C.F.R. § 63.3 6 (e) (1) (i), the Administrator may require that an owner or operator of an affected source make changes to the startup, shutdown, and malfunction plan for that source. The Administrator must require appropriate revisions to a startup, shutdown, and malfunction plan, if the Administrator finds that the plan:~~

~~(A) Does not address a startup, shutdown, or malfunction event that has occurred;~~

~~(B) Fails to provide for the operation of the source (including associated air pollution control and monitoring equipment) during a startup, shutdown, or malfunction event in a manner consistent with the general duty to minimize emissions established by 40 C.F.R. § 63.3 (e) (1) (i);~~

~~(C) Does not provide adequate procedures for correcting malfunctioning process and/or air pollution control and monitoring equipment as quickly as practicable; or~~

~~(D) Includes an event that does not meet the definition of startup, shutdown, or malfunction listed in 40 C.F.R. § 63.2.~~

~~(viii) The owner or operator may periodically revise the startup, shutdown, and malfunction plan for the affected source as necessary to satisfy the requirements of this part or to reflect changes in equipment or procedures at the affected source. Unless the permitting authority provides otherwise, the owner or operator may make such revisions to the startup, shutdown, and malfunction plan without prior approval by the Administrator or the permitting authority. However, each such revision to a startup, shutdown, and malfunction plan must be reported in the semiannual report required by 40 C.F.R. § 63.10 (d) (5). If the startup, shutdown, and malfunction plan fails to address or inadequately addresses an event that meets the characteristics of a malfunction but was not included in the startup, shutdown, and malfunction plan at the time the owner or operator developed the plan, the owner or operator must revise the startup, shutdown, and malfunction plan within 45 days after the event to include detailed procedures for operating and maintaining the source during similar malfunction events and a program of corrective action for similar malfunctions of process or air pollution control and monitoring equipment. In the event that the owner or operator makes any revision to the startup, shutdown, and malfunction plan which alters the scope of the activities at the source which are deemed to be a startup, shutdown, or malfunction, or otherwise modifies the applicability of any emission limit, work practice requirement, or other requirement in a standard established under this part, the revised plan shall not take effect until after the owner or operator has provided a written notice describing the revision to the permitting authority.~~

~~(ix) The Title V permit for an affected source must require that the owner or operator adopt a startup, shutdown, and malfunction plan which conforms to the provisions of this part, and that the owner or operator operate and maintain the source in accordance with the procedures specified in the current startup, shutdown, and malfunction plan. However, any revisions made to the startup, shutdown, and malfunction plan in accordance with the procedures established by this part shall not be deemed to constitute permit revisions under part 70 or part 71 of this chapter. Moreover, none of the procedures specified by the startup, shutdown, and malfunction plan for an affected source shall be deemed to fall within the permit shield provision in section 504 (f) of the Clean Air Act.~~

~~**[45CSR34, 40 C.F.R. §63.6(e)(3), EU2 through EU7]**~~

3.3.3. (1) The owner or operator of a kiln and clinker cooler subject to limitations on particulate matter emissions shall demonstrate initial compliance by conducting a performance test using Method 5 or Method 5I at appendix A-3 to part 60 of this chapter. You must also monitor continuous performance through use of a PM continuous parametric monitoring system (PM CPMS). ~~compliance by conducting a performance test~~ Compliance must be demonstrated as specified in Section 3.3.3 (1) (i) through (1) ~~(iv)~~ (ix) [40 C.F.R. §§ 63.1349 (b) (1) (i) through (b) (1) ~~(iv)~~ (ix)]. ~~The owner or operator of an in-line kiln/raw mill subject to limitations on particulate matter emissions shall demonstrate initial compliance by conducting separate performance tests as specified in Section 3.3.3 (1)(i) through (1)(iv) [40 C.F.R. §§ 63.1349 (b) (1) (i) through (b) (1) (iv)] while the raw mill of the in-line kiln/raw mill is under normal operating conditions and while the raw mill of the in-line kiln/raw mill is not operating. The owner or operator of a clinker cooler subject to limitations on particulate matter emissions shall demonstrate initial compliance by conducting a performance test as specified in Section 3.3.3 (1) (i) through (1) (iii) [40 C.F.R. §§ 63.1349 (b) (1) (i) through (b) (1) (iii)]. The opacity exhibited during the period of the Method 5 of Appendix A to 40 C.F.R. part 60 of Chapter I of Title 40 performance tests required by Section 3.3.3 (1) (i) [40 C.F.R. § 63.1349 (b) (1) (i)] shall be determined as required in 40 C.F.R. § 63.1349 (b) (1) (v) and (b) (vi).~~

~~(i) Method 5 of appendix A to 40 C.F.R. part 60 of Chapter I of Title 40 shall be used to determine PM emissions. Each performance test shall consist of three separate runs under the conditions that exist when the affected source is operating at the representative performance conditions in accordance with 40 C.F.R. § 63.7 (e). Each run shall be conducted for at least 1 hour, and the minimum sample volume shall be 0.85 dscm (30 dscf). The average of the three runs shall be used to determine compliance. A determination of the PM collected in the impingers ("back half") of the Method 5 particulate sampling train is not required to demonstrate initial compliance with the PM standards of 40 C.F.R. Part 63, Subpart LLL. However, this shall not preclude the permitting authority from requiring a determination of the "back half" for other purposes.~~

~~(ii) Suitable methods shall be used to determine the kiln or in-line kiln/raw mill feed rate, except for fuels, for each run.~~

~~(iii) The emission rate, E, of PM shall be computed for each run using equation 1:~~

$$\cancel{E = (C_s \cdot Q_{sd}) / P} \qquad \cancel{\text{Equation 1}}$$

~~Where:~~

~~E = emission rate of particulate matter, kg/Mg of kiln feed.~~

~~c_s = concentration of PM, kg/dscm.~~

~~Q_{sd} = volumetric flow rate of effluent gas, dscm/hr.~~

~~P = total kiln feed (dry basis), Mg/hr.~~

~~(iv) When there is an alkali bypass associated with a kiln or in-line kiln/raw mill, the main exhaust and alkali bypass of the kiln or in-line kiln/raw mill shall be tested simultaneously and the combined emission rate of particulate matter from the kiln or in-line kiln/raw mill and alkali bypass shall be computed for each run using equation 2,~~

~~$E_c = (C_{sk} Q_{sdk} + C_{sd} Q_{sdb}) / P$ Equation 2~~

~~Where:~~

~~E_c = the combined emission rate of particulate matter from the kiln or in-line kiln/raw mill and bypass stack, kg/Mg of kiln feed.~~

~~c_{sk} = concentration of particulate matter in the kiln or in-line kiln/raw mill effluent, kg/dscm.~~

~~Q_{sdk} = volumetric flow rate of kiln or in-line kiln/raw mill effluent, dscm/hr.~~

~~c_{sb} = concentration of particulate matter in the alkali bypass gas, kg/dscm.~~

~~Q_{sdb} = volumetric flow rate of alkali bypass gas, dscm/hr.~~

~~P = total kiln feed (dry basis), Mg/hr.~~

~~(v) Except as provided in 40 C.F.R. § 63.1349 (b) (1) (vi) the opacity exhibited during the period of the Method 5 performance tests required by Section 3.3.3 (1) (i) [40 C.F.R. § 63.1349 (b) (1) (i)] shall be determined through the use of a continuous opacity monitor (COM). The maximum six-minute average opacity during the three Method 5 test runs shall be determined during each Method 5 test run, and used to demonstrate initial compliance with the applicable opacity limits of Section 4.1.5 (b) [40 C.F.R. § 63.1343 (e)], 40 C.F.R. §63.1343(e), Table 2, Row 1, or Section 4.1.30. [40 C.F.R. §63.1343(e)].~~

~~*Note: This condition 3.3.3.(1) shall remain in effect until the compliance date specified in condition 3.1.22.*~~

(i) For your PM CPMS, you will establish a site-specific operating limit. If your PM performance test demonstrates your PM emission levels to be below 75 percent of your emission limit you will use the average PM CPMS value recorded during the PM compliance test, the milliamp or digital equivalent of zero output from your PM CPMS, and the average PM result of your compliance test to establish your operating limit. If your PM compliance test demonstrates your PM emission levels to be at or above 75 percent of your emission limit you will use the average PM CPMS value recorded during the PM compliance test to establish your operating limit. You will use the PM CPMS to demonstrate continuous compliance with your operating limit. You must repeat the performance test annually and reassess and adjust the site-specific operating limit in accordance with the results of the performance test.

(A) Your PM CPMS must provide a 4-20 milliamp or digital signal output and the establishment of its relationship to manual reference method measurements must be determined in units of milliamps or the monitors digital equivalent.

(B) Your PM CPMS operating range must be capable of reading PM concentrations from zero to a level equivalent to three times your allowable emission limit. If your PM CPMS is an auto-ranging instrument capable of multiple scales, the primary range of the instrument must be capable of reading

PM concentration from zero to a level equivalent to three times your allowable emission limit.

(C) During the initial performance test or any such subsequent performance test that demonstrates compliance with the PM limit, record and average all milliamp or digital output values from the PM CPMS for the periods corresponding to the compliance test runs (e.g., average all your PM CPMS output values for three corresponding Method 5I test runs).

(ii) Determine your operating limit as specified in paragraphs (b)(1)(iii) through (iv) of this section. If your PM performance test demonstrates your PM emission levels to be below 75 percent of your emission limit you will use the average PM CPMS value recorded during the PM compliance test, the milliamp or digital equivalent of zero output from your PM CPMS, and the average PM result of your compliance test to establish your operating limit. If your PM compliance test demonstrates your PM emission levels to be at or above 75 percent of your emission limit you will use the average PM CPMS value recorded during the PM compliance test to establish your operating limit. You must verify an existing or establish a new operating limit after each repeated performance test. You must repeat the performance test at least annually and reassess and adjust the site-specific operating limit in accordance with the results of the performance test.

(iii) If the average of your three Method 5 or 5I compliance test runs is below 75 percent of your PM emission limit, you must calculate an operating limit by establishing a relationship of PM CPMS signal to PM concentration using the PM CPMS instrument zero, the average PM CPMS values corresponding to the three compliance test runs, and the average PM concentration from the Method 5 or 5I compliance test with the procedures in (b)(1)(iii)(A) through (D) of this section.

(A) Determine your PM CPMS instrument zero output with one of the following procedures:

(1) Zero point data for in-situ instruments should be obtained by removing the instrument from the stack and monitoring ambient air on a test bench.

(2) Zero point data for extractive instruments should be obtained by removing the extractive probe from the stack and drawing in clean ambient air.

(3) The zero point may also be established by performing manual reference method measurements when the flue gas is free of PM emissions or contains very low PM concentrations (e.g., when your process is not operating, but the fans are operating or your source is combusting only natural gas) and plotting these with the compliance data to find the zero intercept.

(4) If none of the steps in paragraphs (b)(1)(iii)(A)(1) through (3) of this section are possible, you must use a zero output value provided by the manufacturer.

(B) Determine your PM CPMS instrument average in milliamps or digital equivalent, and the average of your corresponding three PM compliance test runs, using equation 3.

$$\bar{x} = \frac{1}{n}\sum_{i=1}^{n} X_1 \,, \bar{y} = \frac{1}{n}\sum_{i=1}^{n} Y_1 \qquad \text{(Eq. 3)}$$

Where:

X1 = The PM CPMS data points for the three runs constituting the performance test.

Y1 = The PM concentration value for the three runs constituting the performance test.

n = The number of data points.

(C) With your instrument zero expressed in milliamps or a digital value, your three run average PM CPMS milliamp or digital signal value, and your three run PM compliance test average, determine a relationship of lb/ton-clinker per milliamp or digital signal value with Equation 4.

$$R = \frac{Y_1}{(X_1 - z)} \qquad \text{(Eq. 4)}$$

Where:

R = The relative lb/ton-clinker per milliamp or digital equivalent for your PM CPMS.

Y1 = The three run average lb/ton-clinker PM concentration.

X1 = The three run average milliamp or digital equivalent output from your PM CPMS.

z = The milliamp or digital equivalent of your instrument zero determined from (b)(1)(iii)(A).

(D) Determine your source specific 30-day rolling average operating limit using the lb/ton-clinker per milliamp or digital signal value from Equation 4 in Equation 5, below. This sets your operating limit at the PM CPMS output value corresponding to 75 percent of your emission limit.

$$O_1 = z + \frac{0.75(L)}{R} \qquad \text{(Eq. 5)}$$

Where:

Ol = The operating limit for your PM CPMS on a 30-day rolling average, in milliamps or the digital equivalent.

L = Your source emission limit expressed in lb/ton clinker.

z = Your instrument zero in milliamps, or digital equivalent, determined from (b)(1)(iii)(A).

R = The relative lb/ton-clinker per milliamp, or digital equivalent, for your PM CPMS, from Equation 4.

(iv) If the average of your three PM compliance test runs is at or above 75 percent of your PM emission limit you must determine your operating limit by averaging the PM CPMS milliamp or digital equivalent output corresponding to your three PM performance test runs that demonstrate compliance with the emission limit using

Equation 6.

$$O_h = \frac{1}{n}\sum_{i=1}^{n} X_1 \qquad \text{(Eq. 6)}$$

Where:

X1 = The PM CPMS data points for all runs i.

n = The number of data points.

Oh = Your site specific operating limit, in milliamps or the digital equivalent.

(v) To determine continuous operating compliance, you must record the PM CPMS output data for all periods when the process is operating, and use all the PM CPMS data for calculations when the source is not out-of-control. You must demonstrate continuous compliance by using all quality-assured hourly average data collected by the PM CPMS for all operating hours to calculate the arithmetic average operating parameter in units of the operating limit (milliamps or the digital equivalent) on a 30 operating day rolling average basis, updated at the end of each new kiln operating day. Use Equation 7 to determine the 30 kiln operating day average.

$$30\text{kiln operating day} = \frac{\sum_{i=1}^{n} Hpvi}{n} \qquad \text{(Eq. 7)}$$

Where:

Hpvi = The hourly parameter value for hour i.

n = The number of valid hourly parameter values collected over 30 kiln operating days.

(vi) For each performance test, conduct at least three separate test runs each while the mill is on and the mill is off, under the conditions that exist when the affected source is operating at the level reasonably expected to occur. Conduct each test run to collect a minimum sample volume of 2 dscm for determining compliance with a new source limit and 1 dscm for determining compliance with an existing source limit. Calculate the time weighted average of the results from three consecutive runs, including applicable sources as required by (b)(1)(viii), to determine compliance. You need not determine the particulate matter collected in the impingers ("back half") of the Method 5 or Method 5I particulate sampling train to demonstrate compliance with the PM standards of this subpart. This shall not preclude the permitting authority from requiring a determination of the "back half" for other purposes.

(vii) For PM performance test reports used to set a PM CPMS operating limit, the electronic submission of the test report must also include the make and model of the PM CPMS instrument, serial number of the instrument, analytical principle of the instrument (e.g. beta attenuation), span of the instruments primary analytical range, milliamp value or digital equivalent to the instrument zero output, technique by which this zero value was determined, and the average milliamp or digital equivalent signals corresponding to each PM compliance test run.

(viii) When there is an alkali bypass and/or an inline coal mill with a separate stack associated with a kiln, the main exhaust and alkali bypass and/or inline coal mill

must be tested simultaneously and the combined emission rate of PM from the kiln and alkali bypass and/or inline coal mill must be computed for each run using Equation 8 of this section.

$$E_{Cm} = \frac{E_K + E_B + E_C}{P} \quad \text{(Eq. 8)}$$

Where:

ECm = Combined hourly emission rate of PM from the kiln and bypass stack and/or inline coal mill, lb/ton of kiln clinker production.

EK = Hourly emissions of PM emissions from the kiln, lb.

EB = Hourly PM emissions from the alkali bypass stack, lb.

EC = Hourly PM emissions from the inline coal mill stack, lb.

P = Hourly clinker production, tons.

(ix) The owner or operator of a kiln with an in-line raw mill and subject to limitations on PM emissions shall demonstrate initial compliance by conducting separate performance tests while the raw mill is under normal operating conditions and while the raw mill is not operating, and calculate the time weighted average emissions. The operating limit will then be determined using 63.1349(b)(1)(i) of this section.

(2) *Opacity tests.* If you are subject to limitations on opacity under 40 C.F.R. 63 Subpart LLL, you must conduct opacity tests in accordance with Method 9 of appendix A–4 to part 60 of Chapter I of Title 40. The duration of the Method 9 performance test must be 3 hours (30 6-minute averages), except that the duration of the Method 9 performance test may be reduced to 1 hour if the conditions of paragraphs (2)(i) through (2)(ii) of this condition. For batch processes that are not run for 3-hour periods or longer, compile observations totaling 3 hours when the unit is operating.

(i) There are no individual readings greater than 10 percent opacity;

(ii) There are no more than three readings of 10 percent for the first 1-hour period.

(3) *D/F emissions tests.* If you are subject to limitations on D/F emissions under 40 C.F.R. 63 Subpart LLL, you must conduct a performance test using Method 23 of appendix A–7 to part 60 of Chapter I of Title 40. The owner or operator of a kiln or in-line kiln/raw mill equipped with an alkali bypass must conduct simultaneous performance tests of the kiln or in-line kiln/raw mill exhaust and the alkali bypass. However, the owner or operator of an in-line kiln/raw mill may conduct a performance test of the alkali bypass exhaust when the raw mill of the in-line kiln/raw mill is operating or not operating.

(i) Each performance test must consist of three separate runs conducted under representative conditions. The duration of each run must be at least 3 hours, and the sample volume for each run must be at least 2.5 dscm (90 dscf).

(ii) The temperature at the inlet to the kiln or in-line kiln/raw mill PMCD, and where applicable, the temperature at the inlet to the alkali bypass PMCD, must be continuously recorded during the period of the Method 23 test, and the continuous temperature record(s) must be included in the performance test report.

(iii) Hourly average temperatures must be calculated for each run of the performance test.

(iv) The run average temperature must be calculated for each run, and the average of the run average temperatures must be determined and included in the performance test report and will determine the applicable temperature limit in accordance with 40 C.F.R. §63.1346(b).

(4) *THC emissions test.* If you are subject to limitations on THC emissions, you must operate a CEMS in accordance with the requirements in §63.1350(i). For the purposes of conducting the accuracy and quality assurance evaluations for CEMS, the THC span value (as propane) is 50 ppmvw and the reference method (RM) is Method 25A of appendix A to part 60 of this chapter.

(5) *Mercury emissions tests*. If you are subject to limitations on mercury emissions, you must operate a mercury CEMS or a sorbent trap monitoring system in accordance with the requirements of §63.1350(k). The initial compliance test must be based on the first 30 kiln operating days in which the affected source operates using a mercury CEMS or a sorbent trap monitoring system after the compliance date of the rule.

(6) *HCl emissions tests*. For a source subject to limitations on HCl emissions you must conduct performance testing by one of the following methods:

(i)(A) If the source is equipped with a wet scrubber, tray tower or dry scrubber, you must conduct performance testing using Method 321 of appendix A to this part unless you have installed a CEMS that meets the requirements §63.1350(l)(1). For kilns with inline raw mills, testing should be conducted for the raw mill on and raw mill off conditions.

(B) You must establish site specific parameter limits by using the CPMS required in §63.1350(l)(1). For a wet scrubber or tray tower, measure and record the pressure drop across the scrubber and/or liquid flow rate and pH in intervals of no more than 15 minutes during the HCl test. Compute and record the 24-hour average pressure drop, pH, and average scrubber water flow rate for each sampling run in which the applicable emissions limit is met. For a dry scrubber, measure and record the sorbent injection rate in intervals of no more than 15 minutes during the HCl test. Compute and record the 24-hour average sorbent injection rate and average sorbent injection rate for each sampling run in which the applicable emissions limit is met.

(7) *Total Organic HAP Emissions Tests*. Instead of conducting the performance test specified in paragraph (4) of this section, you may conduct a performance test to determine emissions of total organic HAP by following the procedures in paragraphs 40 CFR 63.1349(b)(7)(i) through (v).

[45CSR34, 40 C.F.R. §§ 63.1349 (b) (1), (2), (3) (i) – (iv), (4), (5), (6)(i), and (7) ~~(1) (i) – (v), (2), and (3) (i) – (iv)~~, 45CSR14, R14-026, B.10., EU3, EU4, EU6, EU7]

3.3.4. Reserved

~~Except as provided in Section 3.3.6 [40 C.F.R. §63.1348(c)], performance tests required under Section 3.3.3 (1) through (2) [40 C.F.R. §§ 63.1349 (b) (1) and (b) (2)] shall be repeated every five years, except that the owner or operator of a kiln, in-line kiln/raw mill or clinker cooler is not required to repeat the initial performance test of opacity for the kiln, in-line kiln/raw mill or clinker cooler.~~

~~*Note: This condition 3.3.4. shall remain in effect for particulate matter only until the compliance date specified in condition 3.1.22.*~~

~~**[45CSR34, 40 C.F.R. §63.1349(c), EU3, EU4, EU6, EU7]**~~

3.3.5. *Performance test frequency.* Except as provided in 40 C.F.R. §63.1348(b), performance tests are required for affected sources that are subject to a dioxin, total organic HAP, or HCl, emissions limit and must be repeated every 30 months except for pollutants where that specific pollutant is monitored using CEMS. Performance tests required every 30 months must be completed no more than 31 calendar months after the previous performance test. Performance tests for particulate matter are required to be repeated every 12 months and must be completed no more than 13 calendar months after the previous performance test.
[45CSR34, 40 C.F.R. §63.1349(c), ~~EU3, EU4, EU6, EU7~~, EP42.04]

3.5.10. Each owner or operator subject to the requirements of 40 C.F.R. Part 63 Subpart LLL shall comply with the notification requirements in 40 C.F.R § 63.9 as follows:

(1) Initial notifications as required by 40 C.F.R. §§ 63.9 (b) through (d). For the purposes of 40 C.F.R. Part 63 Subpart LLL, a Title V or 40 CFR part 70 permit application may be used in lieu of the initial notification required under 40 C.F.R. § 63.9 (b), provided the same information is contained in the permit application as required by 40 C.F.R. § 63.9 (b), and the State to which the permit application has been submitted has an approved operating permit program under part 70 of Chapter I of Title 40 and has received delegation of authority from the EPA. Permit applications shall be submitted by the same due dates as those specified for the initial notification.

(2) Notification of performance tests, as required by 40 C.F.R. §§ 63.7 and 63.9 (e).

(3) Notification of opacity and visible emission observations required by 40 C.F.R. § 63.1349 in accordance with 40 C.F.R. §§ 63.6 (h) (5) and 63.9 (f).

(4) As required by 40 C.F.R. § 63.9 (g), notification of the date that the continuous emission monitor performance evaluation required by 40 C.F.R.§ 63.8 (e) is scheduled to begin.

(5) Notification of compliance status, as required by 40 C.F.R. § 63.9(h).

(6) Within 48 hours of an exceedance that triggers retesting to establish compliance and new operating limits, notify the appropriate permitting agency of the planned performance tests. The notification requirements of §§63.7(b) and 63.9(e) do not apply to retesting required for exceedances under this subpart.

[45CSR34, 40 C.F.R. § 63.1353 (b)]

3.5.11. The owner or operator of an affected source shall comply with the reporting requirements specified in 40 C.F.R. § 63.10 of the general provisions of 40 C.F.R. Part 63 Subpart A as follows:

(1) As required by 40 C.F.R. § 63.10 (d) (2), the owner or operator shall report the results of performance tests as part of the notification of compliance status.

(2) As required by 40 C.F.R. § 63.10 (d) (3), the owner or operator of an affected source shall report the opacity results from tests required by 40 C.F.R. § 63.1349.

(3) As required by 40 C.F.R. § 63.10 (d) (4), the owner or operator of an affected source who is required to submit progress reports as a condition of receiving an extension of compliance under 40 C.F.R. § 63.6 (i) shall submit such reports by the dates specified in the written extension of compliance.

(4)-(5) Reserved

~~(4) As required by 40 C.F.R § 63.10 (d) (5), if actions taken by an owner or operator during a startup, shutdown, or malfunction of an affected source (including actions taken to correct a malfunction) are consistent with the procedures specified in the source's startup, shutdown, and malfunction plan specified in 40 C.F.R § 63.6 (e) (3), the owner or operator shall state such information in a semiannual report. Reports shall only be required if a startup, shutdown, or malfunction occurred during the reporting period. The startup, shutdown, and malfunction report may be submitted simultaneously with the excess emissions and continuous monitoring system performance reports; and~~

~~(5) Any time an action taken by an owner or operator during a startup, shutdown, or malfunction (including actions taken to correct a malfunction) is not consistent with the procedures in the startup, shutdown, and malfunction plan, the owner or operator shall make an immediate report of the actions taken for that event within 2 working days, by telephone call or facsimile (FAX) transmission. The immediate report shall be followed by a letter, certified by the owner or operator or other responsible official, explaining the circumstances of the event, the reasons for not following the startup, shutdown, and malfunction plan, and whether any excess emissions and/or parameter monitoring exceedances are believed to have occurred.~~

(6) As required by 40 C.F.R § 63.10 (e) (2), the owner or operator shall submit a written report of the results of the performance evaluation for the continuous monitoring system required by 40 C.F.R § 63.8 (e). The owner or operator shall submit the report simultaneously with the results of the performance test.

(7) As required by 40 C.F.R § 63.10 (e) (2), the owner or operator of an affected source using a continuous opacity monitoring system to determine opacity compliance during any performance test required under 40 C.F.R § 63.7 and described in 40 C.F.R § 63.6 (d) (6) shall report the results of the continuous opacity monitoring system performance evaluation conducted under 40 C.F.R § 63.8 (e).

(8) As required by 40 C.F.R § 63.10 (e) (3), the owner or operator of an affected source equipped with a continuous emission monitor shall submit an excess emissions and continuous monitoring system performance report for any event when the continuous monitoring system data indicate the source is not in compliance with the applicable emission limitation or operating parameter limit.

(9) The owner or operator shall submit a summary report semiannually, to the EPA via the Compliance and Emissions Data Reporting Interface (CEDRI). (CEDRI can be accessed through the EPA's Central Data Exchange (CDX) (www.epa.gov/cdx).) You must use the appropriate electronic report in CEDRI for this subpart. Instead of using the electronic report in CEDRI for this subpart, you may submit an alternate electronic file consistent with the extensible markup language (XML) schema listed on the CEDRI Web site (http://www.epa.gov/ttn/chief/cedri/index.html), once the XML schema is available. If the reporting form specific to this subpart is not available in CEDRI at the time that the report is due, you must submit the report the Administrator at the appropriate address listed in §63.13. You must begin submitting reports via CEDRI no later than 90 days after the form becomes available in CEDRI. The reports must be submitted by the deadline specified in this subpart, regardless of the method in which the reports are submitted. The report must contain ~~which contains~~ the information specified in 40 C.F.R § 63.10 (e) (3) (vi). In addition, the summary report shall include:

(i) All exceedences of maximum control device inlet gas temperature limits specified in Sections 4.1.6., and 4.1.7. [40 C.F.R §§63.1346(a) and (b)];

(ii) All failures to calibrate thermocouples and other temperature sensors as required

under Section 3.2.5(1)(iii) [40 C.F.R §63.1350(g)(1)(iii)]; and

(iv) The results of any combustion system component inspections conducted within the reporting period as required under Section 3.2.1.(3) [40 C.F.R §63.1347(a)(3)].

(v) All failures to comply with any provision of the operation and maintenance plan developed in accordance with Section 3.2.1 [40 C.F.R §§63.1347(a) and (b)].

(vi) ~~Monthly rolling average mercury, THC, PM, and HCl (if applicable) emissions levels in the units of the applicable emissions limit for each kiln, and clinker cooler.~~ For each PM CPMS, HCl, Hg, and THC CEMS, D/F temperature monitoring system, or Hg sorbent trap monitoring system, within 60 days after the reporting periods, you must report all of the calculated 30-operating day rolling average values derived from the CPMS, CEMS, CMS, or Hg sorbent trap monitoring systems.

(vii) In response to each violation of an emissions standard or established operating parameter limit, the date, duration and description of each violation and the specific actions taken for each violation including inspections, corrective actions and repeat performance tests and the results of those actions.

(viii) Within 60 days after the date of completing each CEMS performance evaluation test as defined in §63.2, you must submit relative accuracy test audit (RATA) data to the EPA's CDX by using CEDRI in accordance with paragraph (b)(9) of this section. Only RATA pollutants that can be documented with the ERT (as listed on the ERT Web site) are subject to this requirement. For any performance evaluations with no corresponding RATA pollutants listed on the ERT Web site, you must submit the results of the performance evaluation to the Administrator at the appropriate address listed in §63.13.

(ix) For PM performance test reports used to set a PM CPMS operating limit, the electronic submission of the test report must also include the make and model of the PM CPMS instrument, serial number of the instrument, analytical principle of the instrument (e.g. beta attenuation), span of the instruments primary analytical range, milliamp value equivalent to the instrument zero output, technique by which this zero value was determined, and the average milliamp signals corresponding to each PM compliance test run.

(x) All reports required by this subpart not subject to the requirements in paragraphs (b)(9) introductory text and (b)(9)(viii) of this section must be sent to the Administrator at the appropriate address listed in §63.13. The Administrator or the delegated authority may request a report in any form suitable for the specific case (e.g., by commonly used electronic media such as Excel spreadsheet, on CD or hard copy). The Administrator retains the right to require submittal of reports subject to paragraph (b)(9) introductory text and (b)(9)(viii) of this section in paper format.

(10) If the total continuous monitoring system downtime for any CEM or any continuous monitoring system (CMS) for the reporting period is ten percent or greater of the total operating time for the reporting period, the owner or operator shall submit an excess emissions and continuous monitoring system performance report along with the summary report.
[45CSR34, 40 C.F.R. § 63.1354 (b)]

3.5.12. ~~The semiannual report required by paragraph (b)(9) of 40 C.F.R. §63.1354 (condition 3.5.11.(9)) must include the number, duration, and a brief description for each type of malfunction which occurred during the reporting period and which caused or may have caused any applicable emission limitation to be exceeded. The report must also include a description of actions taken by an owner or operator during a malfunction of an affected source to minimize emissions in accordance with 40 C.F.R. §63.1348(d) (condition 3.1.23.), including actions taken to correct a malfunction.~~ Reporting a failure to meet a standard due to a malfunction. For each failure to meet a standard or emissions limit caused by a malfunction at an affected source, you must report the failure in the semi-annual compliance report required by §63.1354(b)(9). The report must contain the date, time and duration, and the cause of each event (including unknown cause, if applicable), and a sum of the number of events in the reporting period. The report must list for each event the affected source or equipment, an estimate of the volume of each regulated pollutant emitted over the emission limit for which the source failed to meet a standard, and a description of the method used to estimate the emissions. The report must also include a description of actions taken by an owner or operator during a malfunction of an affected source to minimize emissions in accordance with §63.1348(d), including actions taken to correct a malfunction.
[45CSR34, 40 C.F.R. § 63.1354(c)]

3.7.2. The following requirements specifically identified are not applicable to the source based on the determinations set forth below. The permit shield shall apply to the following requirements provided the conditions of the determinations are met.

~~**40 C.F.R. Part 60 Subpart F** (August 31, 1971)~~	~~Standards of Performance for Portland Cement Plants do not apply to Capitol since Capitol commenced construction or modification prior to August 17, 1971. Capitol is also exempt because it is regulated by 40 C.F.R. Part 63 Subpart LLL.~~

4.1.3. During periods of startup, shutdown and malfunctions, the source shall follow the procedures found in the site specific ~~Startup, Shutdown, and Malfunction~~ Operation and Maintenance plan as required by 40 C.F.R. Part 63 Subpart LLL.
[45CSR34, 40 C.F.R. §63.6 (e), 45CSR14, R14-026, A.3., See Section 3.2.~~12~~11.]

4.1.5. ~~*Emissions limits in effect prior to September 9, 2010 for Existing, reconstructed, or new brownfield sources.*~~

No owner or operator of an existing~~, reconstructed or new brownfield~~ kiln or an existing~~, reconstructed or new brownfield~~ in-line kiln/raw mill at a facility that is a major source subject to the provisions of 40 C.F.R. Part 63 Subpart LLL shall cause to be discharged into the atmosphere from these affected sources, any gases during normal operation which:

(a) Contain particulate matter (PM) in excess of 0.07 lb/ton clinker ~~of 0.15 kg per Mg (0.30 LB per ton) of feed (dry basis) to the kiln. When there is an alkali bypass associated with a kiln or in-line kiln/raw mill, the combined particulate matter emissions from the kiln or in-line kiln/raw mill and the alkali bypass are subject to this emission limit.~~

(b) Contain D/F in excess of:

(i) 0.20 ng per dscm (8.7×10^{-11} gr per dscf) (TEQ) corrected to seven percent oxygen; or

(ii) 0.40 ng per dscm (1.7×10^{-10} gr per dscf) (TEQ) corrected to seven percent oxygen,

when the average of the performance test run average temperatures at the inlet to the particulate matter control device is 204 °C (400 °F) or less.

(c) Contain Mercury in excess of 55 lb/MM tons clinker on a rolling 30-day average.

(d) Contain THC in excess of 24 ppmvd corrected to 7% oxygen on a rolling 30-day average.

(e) Contain HCl in excess of 3 ppmvd corrected to 7% oxygen, measured as propane, on a rolling 30-day average.

[45CSR34, 40 C.F.R. §63.1343(e), ~~Table 2, Row 1~~Table 1, Row 1 to 5; 45CSR14, R14-026A, B.10.] (~~EU3, EU4, EU6, EU7~~ EP42.04)

4.1.5.1. During periods of startup and shutdown, existing kilns must comply with the work practices specified in §63.1346(g). ~~*Applicable emission limits under the September 9, 2010 amendments that must be complied with per condition 3.1.22.* Emission limits for D/F in both normal operating mode and startup and shutdown mode is 0.2 ng/dscm (TEQ) and the oxygen correction factor is 7 percent; or if the average temperature at the inlet to the first particulate matter control device (fabric filter or electrostatic precipitator) during the D/F performance test is 400°F or less this limit is changed to 0.4 ng/dscm (TEQ).~~

[45CSR34, 40 C.F.R. §63.1343(b), Table 1, Row 6~~Rows 5 and 7~~; 45CSR14, R14-026A, B.10.] (~~EU3, EU4, EU6, EU7~~ EP42.04)

4.1.6. The owner or operator of a kiln subject to a D/F emission limitation under 40 C.F.R. § 63.1343 must operate the kiln such that the temperature of the gas at the inlet to the kiln particulate matter control device (PMCD) and alkali bypass PMCD, if applicable, does not exceed the applicable temperature limit specified in Section 4.1.7. The owner or operator of an in-line kiln/raw mill subject to a D/F emission limitation under Section 4.1.5. [40 C.F.R. §§ 63.1343~~(b) or (e)~~] must operate the in-line kiln/raw mill, such that:

(1) When the raw mill of the in-line kiln/raw mill is operating, the applicable temperature limit for the main in-line kiln/raw mill exhaust, specified in Section 4.1.7. and established during the performance test when the raw mill was operating is not exceeded, except during periods of startup/shutdown when the temperature limit may be exceeded by no more than 10 percent.

(2) When the raw mill of the in-line kiln/raw mill is not operating, the applicable temperature limit for the main in-line kiln/raw mill exhaust, specified in Section 4.1.7. and established during the performance test when the raw mill was not operating, is not exceeded, except during periods of startup/shutdown when the temperature limit may be exceeded by no more than 10 percent.

(3) If the in-line kiln/raw mill is equipped with an alkali bypass, the applicable temperature limit for the alkali bypass specified in Section 4.1.7. and established during the performance test, with or without the raw mill operating, is not exceeded, except during periods of startup/shutdown when the temperature limit may be exceeded by no more than 10 percent.

[45CSR34, 40 C.F.R. §63.1346 (a), 45CSR14, R14-026, B.10.]

4.1.7. The temperature limit for affected sources meeting the limits of Section 4.1.6. or Section 4.1.6.(1) through (3) is determined in accordance with Section 3.3.3 (3) (iv) [40 C.F.R. § 63.1349 (b) (3) (iv)].

[45CSR34, 40 C.F.R. §63.1346(b), 45CSR14, R14-026, B.10.]

4.1.30. No owner or operator of ~~a new or~~ an existing clinker cooler at a facility which is a major source subject to the provisions of 40 C.F.R. Part 63 Subpart LLL shall cause to be discharged into the atmosphere from the clinker coolers any gases which:

(a) During Normal Operation: Contain particulate matter in excess of 0.07 lb/ton clinker~~0.050 kg per Mg (0.10 LB per ton) of feed (dry basis) to the kiln~~.

(b) ~~Exhibit opacity greater than ten percent.~~ During periods of startup and shutdown existing clinker coolers must comply with the work practices specified in §63.1348(b)(9).

[45CSR34, 40 C.F.R. §63.1343~~(c)~~(b) Table 1, Row 13 and 14, 45CSR14, R14-026, B.10., ~~EP10.02 and EP43.01~~ EP42.04]

~~4.1.30.1. *Applicable emission limits under the September 9, 2010 amendments that must be complied with per condition 3.1.22.* If you source is an existing clinker cooler, and if it is located at a major source, and:~~

~~The operating mode is:~~	~~Your emission limits are:~~	~~And the units of the emission limits are:~~
~~Normal operation~~	~~0.04~~	~~lb/ton clinker~~
~~Startup and shutdown~~	~~0.004~~	~~gr/dscf~~

~~**[45CSR34; 40 C.F.R. §63.1343(b)(1), Table 1, Rows 9 and 10; 45CSR14, R14-026, B.10., EP10.02 and EP43.01]**~~

4.1.56 [The following change should be made to the table of fugitive sources to reflect the increased emissions associated with the increased production permitted under PSD Permit R14-026L. Although, the requested throughput increase for this source was reflected in this PSD Permit, the associated increase in emissions was inadvertently omitted).]

EP25.15	Alternative Fuel Trucks (paved)	~~0.16~~ 0.28	~~0.03~~ 0.05

4.2.8. ~~No additional requirements.~~ Weekly USEPA Method 22 Visible Emissions observations shall be conducted on each emission point listed in Section 4.1.39, during periods when the equipment is operating and processing clinker. The Method 22 opacity observations shall be conducted each week, at a frequency not to exceed ten (10) days between consecutive observations, using a certified reader. If a positive emission is observed during the weekly USEPA Method 22 observations, a corrective action as listed in the facility's Operating and Maintenance Plan must be initiated within one hour. Additionally, within one hour a certified USEPA Method 9 observer must conduct a USEPA Method 9 opacity measurement (6-minutes) on the affected source. Records of the Method 22 observations and any necessary Method 9 observation shall be retained on-site for at least five (5) years. Upon request, the records shall be certified and made available to the Directory or his/her duly authorized representative.
[CONSENT ORDER (CO-R7-E-2016-6)]

4.2.8.1 The permittee shall maintain on-site an amount of replacement bags not to be less than one-third of the total capacity amount for the clinker storage silos baghouses.
[CONSENT ORDER (CO-R7-E-2016-6)]

4.3.2. The permittee shall perform 10-minute monthly USEPA Method 22 Visible Emissions tests on each emission point listed in Sections 4.1.9. and 4.1.13 that is an affected source subject to an opacity limit under 40 CFR Part 63 Subpart LLL. If any emissions are observed in accordance with the

Method 22 testing the permittee shall, within ~~24 hours~~1 hour, perform a 30-minute Method 9 test in accordance with 40 CFR Part 60, Appendix A. If six (6) consecutive monthly inspections reveal no visible emissions, then the observer shall take the readings semi-annually. If there are no emissions observed in the semi-annual inspection, then the readings shall be annual. If, at any time a visible emission is observed, the inspections shall revert back to monthly, until (6) consecutive monthly readings have no visible emissions observed. Records of the Method 22 testing and any necessary Method 9 testing shall be retained on site by the permittee for at least five (5) years. Upon request the records shall be certified and made available to the Director or his/her duly authorized representative.
[45CSR14, R14-026, A.68.]

4.3.9. Reserved
~~In order to determine compliance with the hourly VOC, TSP, and PM_{10} emissions limits set forth in Section 4.1.22. and the particulate loading limit set forth in Section 4.1.24., the permittee shall perform EPA approved stack tests on the preheater-precalciner kiln system exhaust stack as outlined in the following table. The initial compliance test must be performed within 180 days of startup of the pyroprocessing system. Said stack tests shall be used to determine a "LB of pollutant per ton of clinker produced" emission factor. This emission factor along with clinker production records shall be used to determine compliance with the annual VOC and PM emission limits set forth in Section 4.1.22.~~

~~Test~~	~~Test Results~~	~~Testing Frequency~~
~~Initial~~	~~≤50% of VOC, TSP, PM_{10} limits~~	~~Once/5 years~~
~~Initial~~	~~Between 50% and 90% of VOC, TSP, PM_{10} limits~~	~~Once/3 years~~
~~Initial~~	~~≥90% of VOC, TSP, PM_{10} limits~~	~~Annual~~
~~Annual~~	~~After two successive tests indicate emission rates ≤50% of VOC, TSP, PM_{10} limits~~	~~Once/5 years~~
~~Annual~~	~~After two successive tests indicate emission rates <90% of VOC, TSP, PM_{10} limits~~	~~Once/3 years~~
~~Annual~~	~~≥90% of VOC, TSP, PM_{10} limits~~	~~Annual~~
~~Once/3 years~~	~~After two successive tests indicate emission rates ≤50% of VOC, TSP, PM_{10} limits~~	~~Once/5 years~~
~~Once/3 years~~	~~< 90% of VOC, TSP, PM_{10} limits~~	~~Once/3 years~~
~~Once/3 years~~	~~≥90% of VOC, TSP, PM_{10} limits~~	~~Annual~~
~~Once/5 years~~	~~≤50% of VOC, TSP, PM_{10} limits~~	~~Once/5 years~~
~~Once/5 years~~	~~< 90% of VOC, TSP, PM_{10} limits~~	~~Once/3 years~~
~~Once/5 years~~	~~≥90% of VOC, TSP, PM_{10} limits~~	~~Annual~~

~~**[45CSR14, R14-026, B.13., Preheater-Precalciner (EP42.04)]**~~

4.3.10. Reserved.
The permittee shall perform 10-minute monthly USEPA Method 22 Visible Emissions tests on each emission point listed in Section 4.1.24 that is an affected source subject to an opacity limit under 40 CFR Part 63 Subpart LLL. If a positive emission is observed during the monthly USEPA Method 22 inspections, within one hour have a certified USEPA Method 9 observer conduct a USEPA Method 9 "Opacity Measurement" (30-minutes) on the affected source. Records of the Method 22 testing and any necessary Method 9 testing shall be retained on site by the permittee for at least five (5) years. Upon request the records shall be certified and made available to the Director or his/her duly authorized representative.
[45CSR14, 40 C.F.R. §63.1350(f)(1)]

4.3.12. The permittee shall perform 10-minute monthly USEPA Method 22 Visible Emissions tests on each emission point listed in Section 4.1.39 that is an affected source subject to an opacity limit under 40 CFR Part 63 Subpart LLL. If a positive emission is observed during the monthly USEPA Method 22 inspections, ~~a corrective action as listed in the site-specific Startup, Shutdown, and Malfunction~~

~~plan must be initiated within one hour~~. ~~Additionally,~~ within one hour have a certified USEPA Method 9 observer ~~must~~ conduct a USEPA Method 9 "Opacity Measurement" (~~6 minutes~~ 30-minutes) on the affected source. Records of the Method 22 testing and any necessary Method 9 testing shall be retained on site by the permittee for at least five (5) years. Upon request the records shall be certified and made available to the Director or his/her duly authorized representative.
[45CSR14, R14-026, A.21.]

4.3.13. The permittee shall perform 10-minute monthly USEPA Method 22 Visible Emissions tests on each emission point listed in Section 4.1.40 that is an affected source subject to an opacity limit under 40 CFR Part 63 Subpart LLL. If a positive emission is observed during the monthly USEPA Method 22 inspections, ~~a corrective action as listed in the site-specific Startup, Shutdown, and Malfunction plan must be initiated within one hour. Additionally,~~ within one hour have a certified USEPA Method 9 observer ~~must~~ conduct a USEPA Method 9 "Opacity Measurement" (~~6 minutes~~ 30-minutes) on the affected source. Records of the Method 22 testing and any necessary Method 9 testing shall be retained on site by the permittee for at least five (5) years. Upon request the records shall be certified and made available to the Director or his/her duly authorized representative.
[45CSR14, R14-026, A.23.]

4.3.16. The permittee shall perform 10-minute monthly USEPA Method 22 Visible Emissions tests on each emission point listed in Section 4.1.43 that is an affected source subject to an opacity limit under 40 CFR Part 63 Subpart LLL. If a positive emission is observed during the monthly USEPA Method 22 inspections, ~~a corrective action as listed in the site-specific Startup, Shutdown, and Malfunction plan must be initiated within one hour. Additionally,~~ within one hour have a certified USEPA Method 9 observer ~~must~~ conduct a USEPA Method 9 "Opacity Measurement" (~~6 minutes~~ 30-minutes) on the affected source. Records of the Method 22 testing and any necessary Method 9 testing shall be retained on site by the permittee for at least five (5) years. Upon request the records shall be certified and made available to the Director or his/her duly authorized representative.
[45CSR14, R14-026, A.25.]

4.3.17. The permittee shall perform 10-minute monthly USEPA Method 22 Visible Emissions tests on each emission point listed in Section 4.1.47 that is an affected source subject to an opacity limit under 40 CFR Part 63 Subpart LLL. If a positive emission is observed during the monthly USEPA Method 22 inspections, ~~a corrective action as listed in the site-specific Startup, Shutdown, and Malfunction plan must be initiated within one hour. Additionally,~~ within one hour have a certified USEPA Method 9 observer ~~must~~ conduct a USEPA Method 9 "Opacity Measurement" (~~6 minutes~~ 30-minutes) on the affected source. Records of the Method 22 testing and any necessary Method 9 testing shall be retained on site by the permittee for at least five (5) years. Upon request the records shall be certified and made available to the Director or his/her duly authorized representative.
[45CSR14, R14-026, A.29.]

4.3.18. The permittee shall perform 10-minute monthly USEPA Method 22 Visible Emissions tests on each emission point listed in Section 4.1.56 that is an affected source subject to an opacity limit under 40 CFR Part 63 Subpart LLL. If a positive emission is observed during the monthly USEPA Method 22 inspections, ~~a corrective action as listed in the site-specific Startup, Shutdown, and Malfunction plan must be initiated within one hour. Additionally,~~ within one hour have a certified USEPA Method 9 observer ~~must~~ conduct a USEPA Method 9 "Opacity Measurement" (~~6 minutes~~ 30-minutes) on the affected source. Records of the Method 22 testing and any necessary Method 9 testing shall be retained on site by the permittee for at least five (5) years. Upon request the records shall be certified and made available to the Director or his/her duly authorized representative.
[45CSR14, R14-026, A.33.]

ATTACHMENT K – OPERATION & MAINTENANCE PLAN

Per 40 CFR 63.1347(a), a copy of the Plant's Operation & Maintenance Plan is included as part of this Application.

PC MACT OPERATIONS
&
MAINTENANCE
PLAN

Essroc Cement Corporation

Martinsburg Plant

Rev. 6
June 2016

TABLE OF CONTENTS

TABLE OF CONTENTS
(continued)

TABLE OF CONTENTS
(continued)

ATTACHMENTS

History of Document Revision and/or Modification

Revision	Revision Date	Reason for Revision/Modification
1.0	3-20-02	Original Plan for Plant (Long Dry Kilns)
2.0	9/25/08	Update to Plan
3.0	April 2010	Update of Plan to reflect Modified Plant - New Preheater/ Precalciner Kiln System and all new associated equipment
4.0	February 2014	Correct facility name, update Attachment A, add Attachment C
5.0	July 2015	Add PC MACT Final Rule of 2/12/13 requirements
6.0	June 2016	Update list of PC MACT affected sources

1.0 INTRODUCTION

1.1 Scope

The *National Emission Standards for Hazardous Air Pollutants* from the Portland Cement Manufacturing Industry (hereinafter referred to as the PC MACT Final Rule) requires that an Operation and Maintenance Plan (O&M Plan) be developed for the process equipment and air pollution control devices regulated by the PC MACT Final Rule as published in the Federal Register on February 12, 2013. The purpose of this O&M Plan is to identify the manner in which equipment must be operated and maintained in order to exercise good air pollution control practices, and to facilitate compliance with regulatory emission limits and operating requirements mandated for affected emission sources under the PC MACT Final Rule. This O&M Plan is intended to address *only* the processes and systems at the Essroc Cement Corporation, Martinsburg, West Virginia Plant (Plant) that are regulated under the PC MACT Final Rule, and is not intended to function as a compliance tool for all environmental standards or all Plant processes.

Per the PC MACT Final Rule, the Plant is required to have a written O&M Plan that addresses all PC MACT Final Rule affected sources and includes the following required information per 40 CFR 63.1347(a):

(1) Procedures for proper operation and maintenance of the PC MACT Final Rule affected sources and air pollution control devices in order to meet the PC MACT Final Rule emissions limits and operating limits, including fugitive dust control measures for open clinker piles, as stipulated in 40 CFR 63.1343 through 40 CFR 63.1348. Also, the O&M Plan must also address periods of startup and shutdown.

(2) Corrective actions to be taken when required by 40 CFR 63.1350(f)(3).

(3) Procedures to be used during an inspection of the components of the combustion system of the kiln to be conducted at least once per year.

1.2 Objective

The objective of this O&M Plan is to comply with the requirements of 40 CFR 63.1347 and 40 CFR 63.6(e) by providing Plant personnel with operational and maintenance procedures designed to maintain facility compliance.

Section 2.0 provides summary tables of the applicable emission limits and monitoring requirements for all PC MACT affected sources. Section 3.0 contains a description of PC MACT affected sources subject to this O&M Plan. Sections 4.0 through 7.0 present a description of material handling processes, Preheater/Precalciner (PH/PC) kiln system, finish mill systems, and open clinker storage piles, respectively. Section 8.0 presents the inspection program used at the Plant. Sections 9.0 and 10.0 present the recordkeeping

and reporting requirements for all PC MACT affected sources, respectively. Section 11.0 presents Plant startup and shutdown procedures.

2.0 PC MACT EMISSION LIMITS AND MONITORING REQUIREMENTS

As outlined by the PC MACT Final Rule, operations at the Plant that are covered by the PC MACT Final Rule include the following PC MACT affected sources as specified in 40 CFR 63.1340(b)(1) through (9):

- Preheater/Precalciner (PH/PC) Kiln System (which includes an In-line Raw Mill, Alkali Removal System (ARS), Solid Fuel Mill, and Clinker Cooler),
- Three Finish Mills,
- Raw material, clinker, and finished product storage bins,
- Conveying system transfer points including those associated with coal preparation used to convey coal from the Solid Fuel Mill to the PH/PC Kiln,
- Bagging and bulk loading and unloading systems, and
- Open clinker storage piles.

A summary of applicable emissions limits for each affected source group at the Plant is summarized in Table 1. A summary of the compliance monitoring requirements for each PC MACT affected source group at the Plant is summarized in Table 2. The tests must be conducted while the sources are being operated in normal operation.

In the following tables "material handling processes" is used to describe all raw material, clinker, and finished product storage bins; all conveying system transfer points; and all bagging and bulk loading and unloading systems.

TABLE 1 – SUMMARY OF EMISSION LIMITS FOR PC MACT AFFECTED SOURCES

Affected Source	Pollutant	Emission Limit	Source of Limit
PH/PC Kiln System	PM	0.07 Lb/Ton Clinker	40 CFR 63.1343(b)(1)
	D/F	0.20 ng TEQ/dscm; or	40 CFR 63.1343(b)(1)
		0.40 ng TEQ/dscm (PM control device operating at ≤ 400 ^{o}F)	40 CFR 63.1343(b)(1)
	Hg	55 lbs/million tons clinker, 30-day rolling average	40 CFR 63.1343(b)(1)
	THC/O-HAP	24 parts per million by volume, dry (ppmvd), 30-day rolling avg., corrected to 7% oxygen or alternatively meet a Total Organic HAP limit of 12.0 ppmvd.	40 CFR 63.1343(b)(1)
	HCl	3 parts per million by volume, dry (ppmvd), corrected to 7% oxygen, 30-day rolling avg.	40 CFR 63.1343(b)(1)
Finish Mills	Opacity	10%	40 CFR 63.1343(b)(1)
Material Handling Processes	Opacity	10%	40 CFR 63.1345
Open Clinker Storage Piles	Operated in accordance with the fugitive dust emission control measures as identified in Section 7.0 of this O&M Plan.		40 CFR 63.1343(c)

TABLE 2 – SUMMARY OF MONITORING REQUIREMENTS FOR PC MACT AFFECTED SOURCES

Affected Source	Pollutant	Monitoring Requirement
PH/PC Kiln System	PM	Continuous Parametric Monitoring System (CPMS)
	Temperature	Inlet to PH/PC Kiln and ARS Baghouses
	THC	Continuous THC Monitor/O-HAP stack tests
	Hg	Continuous Hg Monitor
	HCl	Continuous HCl Monitor
Finish Mills	Opacity	COMS – Finish Mills 1 and 2 Daily 6-minute Method 22 – Finish Mill 3
		For Finish Mill 3, if visible emission is observed, initiate corrective actions within 1-hour, and then conduct a follow-up 6-minute Method 22 within 24 hours. If visible emission is still observed, conduct a 30-minute Method 9 within 1-hour.
Material Handling Processes	Opacity	Monthly 10-minute Method 22
		If visible emission is observed, initiate corrective actions and conduct a 30-minute Method 9 within 1-hour.
Open Clinker Storage Piles	Operated in accordance with the fugitive dust emission control measures as identified in Section 7.0 of this O&M Plan.	

3.0 PC MACT AFFECTED EQUIPMENT AND SYSTEMS

The following is a description of the various plant processes that are regulated by the PC MACT standards. A list of Plant PC MACT affected sources is presented in Attachment A.

3.1 Raw Material Handling

The weigh feeder system is a PC MACT affected source that meters the quantities of the various raw materials, including limestone, shale, pyrite, and sand, from their raw material storage bins onto the conveying system for transfer to the in-line raw grinding system. The raw materials are selectively withdrawn from the raw material feed bins to the mill feed belt. From the mill feed belt the raw materials are conveyed via a system of belt conveyors and elevators to the in-line raw grinding system. All PC MACT affected sources are enclosed and vent to a dust collector. All dust collectors are closed circuit and recovered particulates are returned back to the process.

The PC MACT affected sources to be monitored for compliance within the raw material handling system include:

- Miscellaneous dust collector stacks/vents

3.2 Raw Grinding and Kiln Feed

Raw materials consisting of limestone, shale, flyash, bottom ash, iron-rich materials, silica-bearing materials, and other materials are processed into kiln feed using an in-line raw grinding system. The kiln feed is then transferred via a system of conveyors and elevators to the raw meal silo. The raw mill is an in-line design type where hot combustion gases from the PH/PC kiln system are forced into the raw grinding system with the dual function of drying the materials during grinding and to sweep the finely ground particles from the grinding system, carrying them through a dynamic separator system. In the dynamic separator, the hot air stream is forced through sets of rotating blades that remove oversized particles that are subsequently returned to the mill system for further grinding. The off-gases from the in-line mill system are combined with the vent air from the clinker cooler and PH/PC kiln and directed to a fabric filter baghouse. All material collected by the baghouse is conveyed to the homogenizing silo via air gravity feeders and elevators, while the clean gases leaving the baghouse are vented to atmosphere through the Main Stack.

The PC MACT affected sources to be monitored for compliance within the in-line raw grinding and kiln feed system include:

- Miscellaneous dust collector stacks/vents
- Main Stack (Inline Raw Mill, PH/PC Kiln, Clinker Cooler, Alkali Removal System, and Solid Fuel Mill)

3.3 PH/PC Kiln System and Clinker Cooler

From the homogenizing silo, kiln feed is conveyed via a system of air gravity conveyors and elevators to the PH/PC kiln. The kiln feed is introduced at the top of preheater tower that supports a vertically stacked series of cyclones. The kiln feed travels counter-current to the upward flow of the combustion gases from the PH/PC kiln. Heat is transferred from the PH/PC kiln gases to the kiln feed as the kiln feed moves downward through each cyclone. Upon exiting the bottom-most cyclone vessel, the partially calcined feed enters the PH/PC kiln. Rotation and gravity conveys the material along the entire length of the PH/PC kiln where the calcination and sintering processes are completed. When the kiln feed reaches the hot end of the PH/PC kiln it has undergone a chemical transformation into Portland cement clinker nodules.

The PH/PC kiln gases exit the upper end of the preheater tower and are forced through the Raw Grinding system, when this system is operating, or they by-pass the Raw Grinding system. In either case, the PH/PC kiln gases are routed to a mixing chamber where they are combined with the vent air from the Clinker Cooler. This occurs prior to the PH/PC kiln gases being treated by a fabric filter baghouse that vents to the atmosphere through the Main Stack.

The PH/PC kiln system is equipped with an Alkali Removal System (ARS). The ARS allows the PH/PC kiln to manufacture low alkali clinker and reduces the potential for physical blockages within the preheater tower. The ARS operates by diverting a small portion of the PH/PC kiln exhaust gas which is laden with high alkali material out of the pyroprocessing system. These diverted PH/PC kiln exhaust gases are quickly cooled or quenched with air and/or water. This allows for condensation of the volatile alkali constituents contained in the diverted PH/PC kiln exhaust gas to form particulate matter. The particulate matter is then removed by a fabric filter baghouse. The gas stream that exits the fabric filter dust collector is then returned to the Main Stack for discharge to the atmosphere. The collected dust containing high alkali material will be conveyed to a storage tank or silos and will either be loaded out to trucks and shipped offsite or conveyed back into the system for the manufacture of masonry cement product.

The PH/PC kiln system is also equipped with a SO_2 scrubber to help reduce the emissions of SO_2 from the system. A scrubber reagent, consisting of calcium hydroxide lime (i.e., hydrated lime), is brought in by truck and offloaded to the hydrated lime storage silo. The silo is equipped with its own fabric filter baghouse to control fugitive particulate emissions. The scrubber reagent is then be pumped to a mixing vessel where it is mixed with water to create a slurry and then piped to the Gas Conditioning Tower where spray nozzles inject droplets of the reagent into the kiln exhaust gas stream. These droplets absorb SO_2 before the water droplets evaporate and form a dry particulate matter which is then removed by the PH/PC kiln fabric filter baghouse.

Coal, petroleum coke, alternate fuel, and other solid fuel are fired simultaneously in the precalciner vessel, the lowest stage of the cyclone tower, and at the hot end of the PH/PC kiln to provide the required energy for the burning process. The PH/PC Kiln system can

also be fired with fuel oil. This fuel is typically only used during kiln start-up or during upsets as supplemental fuel.

Clinker discharged from the kiln passes through a forced-air, reciprocating Clinker Cooler. The majority of the spent cooling air is forced into the hot end of the PH/PC kiln to provide oxygen for combustion. Excess spent air is combined with air from the PH/PC kiln and raw mill and treated using a fabric filter baghouse before it vents to the atmosphere through the Main Stack. The cooled clinker is conveyed to one of two clinker storage silos that feed the Finish Grinding process.

The PC MACT affected sources to be monitored for compliance within the PH/PC kiln and Clinker Cooler systems include:

- Miscellaneous dust collector stacks/vents
- Main Stack (Inline Raw Mill, PH/PC Kiln, Clinker Cooler, Alkali Removal System and Solid Fuel Mill)

3.4 Solid Fuel Grinding System

Petroleum coke is delivered to the Plant by rail car and transferred to the enclosed solid fuel storage area of the Craneway Building. Coal is delivered to the Plant by truck and deposited directly into the enclosed solid fuel storage area of the Craneway Building. The crane within the Craneway Building is used to transfer the petroleum coke and coal to feed bins where the fuel is fed onto a series of conveyor belts to a tubular-type ball mill for drying and grinding. Process air from the mill system is treated by a fabric filter baghouse prior to release to the atmosphere via the Main Stack. The finely ground fuel is conveyed to, and collected in, two pulverized fuel storage tanks, one for the kiln system and one for the precalciner vessel. The pulverized fuel is metered from the storage tanks and is conveyed to the burners via pneumatic conveying. The mix of fuel and conveying air is deployed through the burner into the PH/PC kiln's combustion zone. All of the conveyance equipment used to transfer coal/coke from the Solid Fuel Mill to the PH/PC kiln system is vented to the Solid Fuel Mill baghouse which then vents to the atmosphere through the Main Stack.

The Plant also receives refuse based fuel (RBF) (also referred to as "alternate fuel") which is trucked into the Plant to the Alternate Fuel Feeding System. An Alternate Fuel Dosing System is used to meter the RBF from the Alternate Fuel Feeding System to the PH/PC Kiln. The Alternate Fuel Feeding System and the Alternate Fuel Dosing System are each vented to their own dedicated baghouse which then vents to the atmosphere through the Main Stack.

It should be noted that the only PC MACT affected sources under this O&M Plan are the Alternate Fuel Feeding System, Alternate Fuel Dosing System, Solid Fuel Mill, pulverized fuel storage silos, and conveying equipment from the Solid Fuel Mill to the PH/PC kiln system. The solid fuel conveying transfer points which lead up to the Solid

Fuel Mill are subject to the 40 CFR 60 Subpart Y opacity limit for coal preparation plants.

The PC MACT affected sources to be monitored for compliance within the solid fuel system include:

- Main Stack (Inline Raw Mill, PH/PC Kiln, Clinker Cooler, Alkali Removal System, and Solid Fuel Mill)
- Miscellaneous dust collector stacks, spouts, and hoppers

3.5 Clinker/Gypsum/Finish Mill Additive Handling and Storage

In the Finish Grinding process, gypsum, limestone, and other finish mill additives are inter-ground with clinker to produce cement. Gypsum and synthetic gypsum are received at the Plant via trucks to an enclosed storage area in the Craneway Building. Gypsum/synthetic gypsum is then moved via crane to a storage bin for transfer to the finish mills.

Crushed limestone is diverted from Transfer Tower #1 in the quarry and trucked to the Craneway Building. The limestone is them moved via crane to a storage bin for transfer to the finish mills.

Clinker is transported from the clinker coolers to one of two clinker storage silos by a series of drag conveyors and bucket elevators. The clinker is then conveyed to clinker feed bins in the Craneway Building. In the event that no storage capacity is available in the clinker storage silos, clinker may be conveyed to an enclosed clinker stockpile area in the Craneway Building. Clinker may, as needed, be stored in an open clinker storage pile and is regulated by 40 CFR Part 63.1343(c), Open Clinker Storage Piles, to minimize fugitive dust emissions from piles of clinker, including accidental spillage. Clinker that is routed to the stockpile is reclaimed via crane and transferred to the clinker feed bins in the Craneway Building.

The clinker storage silos, clinker conveying, and clinker feed bins are enclosed and vent to a fabric filter baghouse. All baghouses are closed circuit and recovered particulates are returned back to the process. The gypsum/synthetic gypsum stockpile, clinker stockpile, limestone stockpile, and crane operations are fugitive transfer points which are enclosed within the Craneway Building.

The PC MACT affected sources to be monitored for compliance within the clinker, gypsum, and finish mill additive handling system include:

- Miscellaneous dust collector stacks/vents
- Gypsum/Synthetic Gypsum, Limestone, and Clinker Fugitive Transfer Points within the Craneway Building
- Open Clinker Storage Piles

3.6 Finish Mill Systems

The Finish Grinding process includes three separate milling systems that grind the clinker along with gypsum/synthetic gypsum and other finish mill additives to form the finished cement product.

Clinker, gypsum/synthetic gypsum, and finish mill additives are extracted from their respective storage bins, metered, and fed in pre-determined proportions into either a tubular-type mill (Finish Mill #3) or a vertical-type mill (Finish Mill #1 and Finish Mill #2). A high-molecular weight organic compound solution is also injected into the mill to aid in the grinding process. The clinker/gypsum/additive blend is introduced to the mill where it is pulverized. Sweep air is introduced to the mill to entrain ground cement particles and carry them to the cement separator system. In the separator, the air stream passes through sets of rotating blades that remove over-sized particles of clinker and return them to the mill system for further grinding. Sufficiently ground particles of clinker and gypsum are transported by the air stream into fabric filters: the clean air passes through the fabric filter and is released into the atmosphere, while the material particles get trapped on the outside of the fibers of the fabric filters. Jet-pulses of compressed air are periodically forced inside the fabric filter, causing the material particles to dislodge and fall into the fabric filter hopper, where they are collected and conveyed via rotating screw conveyors to a pneumatic conveying system. The mixture of ground clinker and additive particles (Portland cement) are processed for cooling through a cement cooler for temperature control, and are then pneumatically conveyed to cement storage silos. All finish grinding affected sources, including weigh feeders, conveying systems, elevators, pumps, etc., are enclosed and vent to a dust collector. All dust collectors are closed circuit and recovered particulates are returned back to the process.

The PC MACT affected sources to be monitored for compliance within the finish mill grinding system include:

- Miscellaneous dust collector stacks/vents
- Finish Mill Baghouse Stacks

3.7 Cement Distribution

Finished cement is pneumatically conveyed from the finish mill systems to the cement storage silos. Cement loadout from the storage silos consists of pneumatically transferring the material through a series of air slides to a loading spout. Trucks and railcars can be loaded from the silos. Cement can also be pneumatically transferred to the Packhouse were it is packaged and loaded by pallet onto trucks for export.

During loadout, the transport vehicles are positioned on weigh scales, and the loading spout is inserted into the top hatch of the vehicle. The transport vehicles are loaded to the proper weight as measured by the scales. Transport vehicle hatches are closed upon the completion of cement loading.

The PC MACT affected sources to be monitored for compliance within the cement distribution system include:

- Miscellaneous dust collector stacks/vents

4.0 MATERIAL HANDLING PROCESSES PROCEDURES

As identified in Section 2.0, Material Handling Processes (MHPs) include Raw Material, Kiln Feed, Clinker, Finished Product Storage Bins; Conveying System Transfer Points; Bagging Systems; and Bulk Loading and Unloading Systems.

This section outlines the applicable PC MACT emission limitations for all MHP affected sources as identified in Section 3.0. The operating and maintenance techniques, control equipment, and monitoring systems for affected sources are also addressed in this section. Attachment A lists the PC MACT affected sources at the Plant.

4.1 Regulatory Standards

4.1.1 Opacity

Per 40 CFR 63.1345, a 10 percent opacity limit is applicable to each MHP PC MACT affected source. See applicable monitoring procedures described in Section 4.5.

4.2 Equipment Description

4.2.1 Raw Material Handling

All MHP PC MACT affected sources associated with raw material handling vent to dust collectors for emission control, this includes the limestone bin, shale bin, sand bin, pyrite bin, and fly ash silos weigh feeders and the raw mill feed conveyor.

4.2.2 Raw Grinding and Kiln Feed

The raw grinding and kiln feed MHP PC MACT affected sources include conveying equipment, the Homogenizing Silo, elevators, and the kiln feed belt. All MHP PC MACT affected sources vent to dust collectors for emission control.

4.2.3 Preheater/Precalciner Kiln and Clinker Cooler

The PH/PC Kiln and Clinker Cooler MHP PC MACT affected sources, including the bypass dust conveying and storage and lime storage and are addressed in Section 5. All other MHP PC MACT affected sources vent to dust collectors for emission control.

4.2.4 Solid Fuel Mill

There are no MHP PC MACT affected sources within the Solid Fuel Mill area.

4.2.5 Clinker/Gypsum/Finish Mill Additives Handling and Storage

All PC MACT affected sources associated with conveying to, storage in, and feeding from the clinker storage silos are equipped with dust collectors for emission control.

The PC MACT affected sources within the Craneway Building include gypsum, synthetic gypsum, limestone, and clinker delivery, conveying, crane operations, and transport to the finish mill feed bins. All of the MHP PC MACT affected sources within the Craneway Building are fugitive sources; however the Craneway Building is partially enclosed to control fugitive emissions.

4.2.6 Finish Mill Systems

The finish grinding MHP PC MACT affected sources include clinker and finish mill additive feeders, elevators, and conveying systems. All MHP PC MACT affected sources vent to dust collectors for emission control.

4.2.7 Cement Distribution

The cement distribution affected sources include airslides, conveying systems, cement silos, truck loadouts, rail loadouts, and the packhouse. All MHP PC MACT affected sources vent to dust collectors for emission control.

4.3 Operating Procedures

Effective control of emissions from all MHPs equipped with a dust collector consists of the proper operation of the associated dust collector. The dust collectors will be operated such that the magnehelic gauge reading for the dust collectors will be inspected for a pressure drop reading of 3 to 5 inches. Furthermore, the dust collectors' fans and cleaning systems will be inspected for proper operation. Inspection program details are provided in Section 8.0.

Effective control of emissions from the fugitive affected sources consists of the use of enclosures for the Craneway Building.

For the cement loadout locations, seals between the moving and stationary portions of the cement handling systems are used to ensure that emissions are contained. Proper maintenance of the enclosures and seals assures compliance with the standard. In addition, the loadout spouts are advanced deeply within the loading port of the transport vehicle. By design, the components of the cement handling system are totally enclosed.

4.4 Maintenance Techniques

An integral part of the maintenance program at the Plant is the performance of periodic inspections of all equipment subject to PC MACT standards. All inspections will be

conducted according to the Martinsburg Plant Standard Operating Procedure (SOP). Section 8.0 provides the inspection procedures for all PC MACT affected equipment.

4.4.1 Raw Material Handling

The skirting, drop chutes, conveyor belts, enclosures, and dust collectors used in the raw material handling system are periodically inspected for placement, excessive wear, and damage, and are repaired or replaced as necessary.

Associated dust collectors are periodically inspected for damage to the dust collector skeleton, equipment associated with cleaning, collection hopper(s), and dust collection bags.

4.4.2 Raw Grinding and Kiln Feed

The housing structures of the associated raw mill transfer equipment (air slides, bucket elevators, and conveyors) are periodically inspected for excessive wear and damage, and are repaired or replaced as necessary.

Associated dust collectors are periodically inspected for damage to the dust collector skeleton, equipment associated with cleaning, collection hopper(s), and dust collection bags.

4.4.3 Preheater/Precalciner Kiln and Clinker Cooler

Associated dust collectors are periodically inspected for damage to the dust collector skeleton, equipment associated with cleaning, collection hopper(s), and dust collection bags.

4.4.4 Solid Fuel Mill

There are no MHP PC MACT affected sources within the Solid Fuel Mill area.

4.4.5 Clinker/Gypsum/Finish Mill Additives Handling and Storage

The skirting, drop chutes, and dust collectors used in the clinker, gypsum, and finish mill additives system are periodically inspected for placement, excessive wear, and damage, and are repaired or replaced as necessary to ensure that they remain in good repair.

Associated dust collectors are periodically inspected for damage to the dust collector skeleton, equipment associated with cleaning, collection hopper(s), and dust collection bags.

4.4.6 Finish Mill Systems

The affected seals and housing structures of the associated the finish mill transfer equipment (i.e., air slides, bucket elevators, and piping systems) are periodically inspected for excessive wear and damage, and are repaired or replaced as necessary.

Associated dust collectors are periodically inspected for damage to the dust collector skeleton, equipment associated with cleaning, collection hopper(s), and dust collection bags.

4.4.7 Cement Distribution

The seals between the moving and stationary portions of the cement handling system, enclosures, cement loading spouts and all transfer equipment including air slides, cement pumps, and piping are periodically inspected for proper placement, excessive wear, and damage, and are repaired or replaced as appropriate.

Associated dust collectors are periodically inspected for damage to the dust collector skeleton, equipment associated with cleaning, collection hopper(s), and dust collection bags.

4.5 Monitoring Procedures

Periodic visual emissions observations, in accordance with 40 CFR 63.1350(f)(1), are required for each affected source mentioned above subject to the provisions of 40 CFR 63.1345. The test must be conducted under normal operating conditions. The periodic monitoring procedures outlined below are consistent with PC MACT Final Rule requirements.

Opacity (i.e., visual emissions) is measured at the previously noted PC MACT affected sources in accordance with EPA Method 22 of Appendix A to 40 CFR Part 60 and Method 9 of Appendix A to 40 CFR Part 60 visible emission evaluation methods. Method 22 and Method 9 evaluations are conducted as described below. Sample Method 22 observation records are included as Attachment B.

- Monthly 10-minute visible emissions tests of each affected source are conducted in accordance with Method 22 while the affected sources are in operation. Results will be documented on forms similar to that in Attachment B.

- If visible emissions are observed during any Method 22 test, the facility will conduct a 30-minute test of opacity in accordance with Method 9 within one hour of the observation of visible emissions during the Method 22 test. If visible emissions are observed during any Method 22 visible emissions the Plant will also initiate, within one-hour, the corrective actions specified in Section 4.6 of this O&M Plan, as required by 40 CFR 63.1347.

- If no visible emissions are observed in six consecutive monthly tests for any affected source, the frequency of Method 22 testing may be decreased from monthly to semi-annually for that PC MACT affected source.

- If no visible emissions are observed during the semi-annual test for any affected source, the frequency of Method 22 testing may be decreased from semi-annually to annually for that PC MACT affected source.

- If visible emissions are observed during any semi-annual or annual test, visible emissions observations of that PC MACT affected source must resume on a monthly basis and maintain that schedule until no visible emissions are observed in six consecutive monthly tests.

Visible emissions monitoring will not be conducted for totally enclosed conveying system transfer points (i.e., transfer points that are enclosed on all sides, top, and bottom). Buildings containing partially enclosed or unenclosed conveying system transfer points will be subjected to visible emissions monitoring conducted as previously described. However, emissions from each side, roof, and vent of the building will be evaluated in lieu of the individual transfer points. In addition, if several PC MACT affected sources are controlled by a single pollution control device, monitoring at the outlet of the device will demonstrate compliance for all covered sources.

4.6 Corrective Actions

As required by 40 CFR 63.1347(a)(2), this section provides procedures for corrective actions to be taken pursuant to 40 CFR 63.1350(f)(3) in the event that visible emissions are observed during any Method 22 visible emissions test.

4.6.1 Response Procedures

The following response procedures will be initiated if the Method 9 test conducted as a result of a visual emission observation indicates an exceedance of the opacity limit:

(1) Initiate all relevant inspection procedures listed in Section 8.0;

(2) Based on the results of the inspection, initiate maintenance as appropriate; and

(3) Record duration of excess emissions event and maintenance performed on the baghouse as required by 40 CFR 63.10(b)(2).

5.0 PH/PC KILN SYSTEM PROCEDURES

The Plant operates a PH/PC kiln system which consists of an In-Line Raw Mill, PH/PC Kiln, Clinker Cooler, and associated equipment as described in Section 3.3. All exhaust gases from the PH/PC kiln system components will be combined and directed to a fabric filter baghouse. The clean gases exiting the fabric filter baghouse will be vented to the atmosphere through a common Main Stack. As described in Section 3.3 the PH/PC kiln system is equipped with an ARS which has its own dedicated baghouse which also vents to the Main Stack.

The Plant also operates a Solid Fuel Mill System which consists of a the Solid Fuel Mill itself, the pulverized fuel storage silos, and all conveying equipment used to convey the pulverized fuel from the mill to the kiln and precalciner. The Solid Fuel Mill System has a dedicated fabric filter baghouse to control emissions which also vents to the Main Stack. The Alternate Fuel Feeding and Dosing Systems also have their own dedicated baghouses which also vent to the Main Stack.

5.1 Regulatory Standards

PC MACT permit emission limits affecting the PH/PC kiln system include limits on particulate matter (PM), dioxins and furans (D/F), mercury (Hg), total hydrocarbons (THC), Total Organic HAPs (O-HAPS) as an alternative to THC, and hydrogen chloride (HCl).

5.1.1 Particulate Matter (PM)

PC MACT Rule, 40 CFR 63.1343(b)(1) – Filterable PM emissions from the PH/PC kiln system are limited to 0.07 lb PM/ton clinker calculated as a 30-day rolling average (representing normal operation).

A continuous parameter monitoring system (CPMS) for PM is used as an indicator of compliance with the PM standard for the PH/PC kiln system. The electrical output signal (i.e., milliamps) from the CPMS along with the most recent annual Method 5 stack test will be used to establish a site-specific parametric filterable PM operating limit for the PH/PC kiln system.

5.1.2 Dioxins and Furans (D/F)

40 CFR 63.1343(b)(1) - D/F emissions from the PH/PC kiln system are limited to:

- 0.20 ng per dscm (8.7×10^{-11} gr per dscf) (TEQ) corrected to seven percent oxygen; or

- 0.40 ng per dscm (1.7×10^{-10} gr per dscf) (TEQ) corrected to seven percent

oxygen, when the average of the performance test run average temperatures at the inlet to the particulate matter dust collector is 204 °C (400 °F) or less.

As a parametric monitoring system parameter for compliance with the D/F limit, the temperature of the PH/PC kiln system exhaust gases at the inlet to the Main Baghouse is limited according to the average of the run average temperatures measured during the most recent performance test conducted in accordance with 40 CFR 63.1349(b)(3). This performance testing must be repeated every 30 months using Method 23.

During performance testing, temperature limits are established. Compliance with the temperature limits are based on a three-hour rolling average temperature using 180 successive one-minute averages.

5.1.3 Mercury (Hg)

40 CFR 63.1343(b)(1) – Mercury is limited to 55 lbs per million tons of clinker produced from the PH/PC kiln system calculated as a 30-day rolling average (representing normal operation).

5.1.4 Total Hydrocarbons (THC)/Total Organic HAP (O-HAP)

40 CFR 63.1343(b)(1) - Total hydrocarbon emissions (measured as propane) shall be limited to 24 parts per million by volume, dry (ppmvd), calculated as a 30-day rolling average (representing normal operation), and corrected to 7 percent oxygen
from the PH/PC kiln system.

Any source subject to the 24 ppmvd THC limit may elect to meet an alternative limit of 12 ppmvd for O-HAP per Footnote 4 of Table 1 contained in 40 CFR 63.1343. If the Plant chooses to demonstrate compliance with the O-HAP limit, THC emissions from the THC CEMS along with the most recent O-HAPS stack test will be used to establish a site-specific parametric THC operating limit for the PH/PC kiln system per 40 CFR 63.1350(j).

5.1.5 Hydrogen Chloride (HCl)

40 CFR 63.1343(b)(1) - Hydrogen chloride emissions shall be limited to 3 parts per million by volume, dry (ppmvd), corrected to 7% oxygen, and calculated as a 30-day rolling average (representing normal operation) from the PH/PC kiln system.

5.2 Equipment Description

Particulate emissions are controlled through the use of the five baghouses which exhaust to the Main Stack as described in Section 3.3.

Main Baghouse and ARS Baghouse temperature (i.e., parametric parameter for D/F emissions) is continuously monitored as the PH/PC kiln system operates. Operation parameters are constantly adjusted to maintain the temperature below the limit set during performance testing.

Mercury, total hydrocarbons (or alternatively O-HAP), and hydrogen chloride are continuously monitored as the PH/PC kiln system operates. The emissions associated with mercury, total hydrocarbons, total organic HAPS, and hydrogen chloride are controlled by operation parameters and raw material usage. The Plant also employs the use of a hydrated lime injection scrubber located in the conditioning tower to assist in controlling SO_2 emissions which also results in control of HCl emissions. Operational parameters and raw materials are constantly adjusted to maintain below the applicable regulatory emission limits.

5.3 Operating Techniques

The operation of the PH/PC kiln system is conducted in accordance with the equipment vendor and in-house guidelines. The detailed procedures for the PH/PC kiln system operation are contained in the Martinsburg Plant SOP.

5.3.1 Particulate Matter

The PH/PC kiln system will ensure on-going compliance with the particulate matter standard by properly operating at all times the five baghouses (i.e., one baghouse associated with the In-Line Raw Mill, PH/PC Kiln, and Clinker Cooler; one baghouse associated with the ARS; one baghouse associated with the Solid Fuel Mill; one baghouse associated with the Alternate Fuel Feeding System, and one baghouse associated with the Alternate Fuel Dosing System) which all vent to the Main Stack. The five baghouses operates under negative pressure with a pulse jet cleaning mechanism.

On-going compliance with the PM CPMS limit will be determined by continuous parametric monitoring of the milliamp output signal from the PM CPMS (i.e., the site-specific operating limit) per 40 CFR 63.1350(b). The PM CPMS is located on the Main Stack.

5.3.2 Dioxin / Furan and Temperature at Baghouse Inlets

On-going compliance with the D/F limit will be achieved by operating the PH/PC kiln system and ARS below the maximum temperature measured at the inlet to their respective baghouses (i.e., Main Baghouse and ARS Baghouse) set during the most recent D/F performance test. The temperature of the PH/PC kiln system and ARS exhaust gases at the inlet to their respective baghouses is continuously monitored as required by 40 CFR 63.1350(g).

5.3.3 Mercury

On-going compliance with the Hg limit will be determined by continuous monitoring of mercury from the PH/PC kiln system using a continuous emissions monitoring system (CEMS) for mercury per 40 CFR 63.1350(k).

5.3.4 Total Hydrocarbons (THC)/Total Organic HAP (O-HAP)

On-going compliance with the THC limit will be determined by continuous monitoring of THC from the PH/PC kiln system using a CEMS for THC per 40 CFR 63.1350(i).

Alternatively, ongoing compliance with the O-HAP limit (if the Plant choses to demonstrate compliance with it) will be demonstrated by continuous monitoring of THC from the PH/PC kiln system using a THC CEMS to demonstrate compliance with the site-specific parametric THC operating limit established during the most recent O-HAPS stack test per 40 CFR 63.1350(j).

5.3.5 Hydrogen Chloride (HCl)

On-going compliance with the HCl limit will be determined by continuous monitoring of HCl from the PH/PC kiln system using a CEMS for HCl per 40 CFR 63.1350(l).

5.4 Maintenance Techniques

The five baghouses which vent to the Main Stack (i.e., one baghouse associated with the In-Line Raw Mill, PH/PC Kiln, and Clinker Cooler; one baghouse associated with the ARS; one baghouse associated with the Solid Fuel Mill; one baghouse associated with the Alternate Fuel Feeding System, and one baghouse associated with the Alternate Fuel Dosing System) are periodically inspected for damage to the dust collector skeleton, equipment associated with cleaning, collection hopper(s), and dust collection bags.

Inspection program details are provided in Section 8.0. Inspections will be conducted according to the Martinsburg Plant SOP.

The THC, HCl, and Hg CEMS; PM CPMS; and temperature thermocouples used for parametric monitoring of D/F will be maintained per the manufacturer's specifications and procedures for their operation are contained in the Plant's SOP and respective CEMS QA/QC Plans.

5.5 Monitoring Procedures

The monitoring procedures outlined below are consistent with 40 CFR 63 Subpart A and Subpart LLL standards. These procedures are intended to satisfy the applicable requirements of 40 CFR 63.1350.

5.5.1 Continuous Parameter Monitoring System – PM

As required by 40 CFR 63.1350(b)(1), a continuous parameter monitoring system (CPMS) for PM is used as an indicator of compliance with the PM standard for the PH/PC kiln system. The electrical output signal (i.e., milliamps) from the CPMS along with the most recent annual Method 5 stack test will be used to establish a site-specific parametric filterable PM operating limit for the PH/PC kiln system. The Plant must demonstrate that it does not exceed its filterable PM emission limit during the performance testing when the site-specific parametric operating limit is established. The electrical output signal from the CPMS will be continuously monitored and recorded. The CPMS is calibrated, operated, and maintained in accordance with the provisions of 40 CFR Part 63 Subpart A and the PC MACT Final Rule.

5.5.2 Temperature Monitor

As required by 40 CFR 63.1350(g), continuous monitors must be installed, calibrated, maintained, and continuously operated to record the temperature of kiln exhaust gases at the inlet to the Main Baghouse and the inlet to the ARS Baghouse. The following guidelines should be adhered to when determining compliance with the temperature limit (3-hour rolling average) on the kiln exhaust gases at the inlet to the Main Baghouse and the inlet to the ARS Baghouse:

(1) The recorder response range must include zero and 1.5 times either of the average temperatures established according to the requirements in 40 CFR 63.1349(b)(3)(iv).

(2) The calibration reference method must be a National Institute of Standards and Technology (NIST) calibrated reference thermocouple-potentiometer system.

(3) The three-hour rolling average is calculated as the average of 180 successive one-minute average temperatures.

(4) Periods of time when one-minute averages are not available are ignored when calculating three-hour rolling averages. When one-minute averages become available, the first one-minute average is added to the previous 179 values to calculate the three-hour rolling average.

(5) When the operating status of the in-line raw mill is changed from off to on, or from on to off, the calculation of the three-hour rolling average temperature must begin anew, without considering previous recordings.

(6) Calibration of the thermocouple used to monitor compliance with the 40 CFR 63 Subpart LLL operating limits must be verified at least once every three months.

5.5.3 HCl CEMS

The Main Stack will be equipped with an HCl CEMS for the continuous monitoring of HCl emissions per the PC MACT procedures and requirements stipulated in 40 CFR 63.1350(l).

5.5.4 Hg CEMS

The Main Stack will be equipped with an Hg CEMS for the continuous monitoring of Hg emissions per the PC MACT procedures and requirements stipulated in 40 CFR 63.1350(k).

5.5.5 THC CEMS/O-HAP

The Main Stack will be equipped with an THC CEMS for the continuous monitoring of THC emissions per the PC MACT procedures and requirements stipulated in 40 CFR 63.1350(i).

IF the Plant is complying with the O-HAP emission limit, the THC emissions from the THC CEMS along with the most recent O-HAPS stack test will be used to establish a site-specific parametric THC operating limit for the PH/PC kiln system. The Plant must demonstrate that it does not exceed its O-HAPS emission limit during the performance testing when the site-specific parametric operating limit is established. THC must be continuously monitored per the PC MACT procedures and requirements stipulated in 40 CFR 63.1350(j).

5.5.6 Other Parameters

The Main Stack will monitor stack volumetric flow rate performed in accordance with 40 CFR 63.1350(n) and will also monitor oxygen since the PC MACT emission limits for THC and HCl need to be corrected to 7 percent oxygen. The

moisture content contained in the Main Stack will be determined by measuring moisture using a moisture monitor located on the Main Stack or by using site specific stack moisture content data taken from past Plant stack tests which utilized U. S. EPA Test Method 4, "Determination of Moisture Content in Stack Gases" (40 CFR 60 Appendix A-3).

Appropriate moisture corrections need to be made per 40 CFR 63.1343(a) when measuring dry volumetric flow rate that is used when calculating the Hg emission rate. Hourly clinker production will also be monitored per 40 CFR 63.1348(b)(14)(iv) and calculated in accordance with the methodology of 40 CFR 63.1350(d)(1)(ii).

5.6 Corrective Actions

The corrective actions provided in this section were developed to satisfy the requirements of 40 CFR 63.1350(a)(1). The procedures outlined below must be initiated, upon discovery, when a 30-day rolling average exceeds the applicable PC MACT emission limits as specified in 40 CFR 63.1343(b) or any parametric limits (i.e., the PM CPMS site-specific operating limit; THC site-specific operating limit; or Main Baghouse and ARS Baghouse inlet temperature limits).

5.6.1 Response Procedures

(1) The deviation should be noted and a written explanation describing the cause should be provided.

(2) Initiate process changes in accordance with proper procedures to bring the PH/PC kiln system back into compliance.

(3) When the process does not allow changes to be made to bring the PH/PC kiln system back into compliance, shut the appropriate process down and initiate maintenance as appropriate.

(a) Record the maintenance performed on the process and/or baghouse as required by 40 CFR 63.10(b)(2).

(b) Once maintenance repairs are complete and a thorough inspection of the completed work has shown it to be satisfactory, the process can be put back on line.

6.0 FINISH MILL SYSTEM PROCEDURES

Cement is produced by grinding clinker, gypsum, and finish mill additives in the three finish mill systems as described in Section 3.6.

6.1 Emission Standard

Standards affecting the finish mill systems include limits on the opacity of discharges from the air pollution control devices.

6.1.1 Opacity

40 CFR 63.1345 - Opacity from the finish mill system baghouse stacks are limited to 10 percent based on a 6-minute average.

6.2 Equipment Description

Each finish mill uses two separate systems to control emissions. The first uses feed and discharge seals that ensure fine particulate are retained within the mill. The second is a dust collector that controls particulate from the finish mill. The ground cement is transferred from the mill by an air slide to a bucket elevator. The cement is elevated to an air separator where it is segregated. Oversized materials are returned to the finish mill via an air slide system for further grinding. The air used for conveyance and separation is vented through a dust collector system.

6.3 Operating Techniques

Effective control of emissions from the finish mill systems and associated transfer equipment and air separators consist of the proper operation of all associated dust collectors. Seals between the moving and stationary components of the finish mill feed and discharge locations ensure that emissions are contained within the mill. By design, the components of the finish mill systems are totally enclosed.

The dust collectors will be operated such that the magnehelic gauge reading for the dust collectors will be inspected for a pressure drop reading of 3 to 5 inches. Furthermore, the dust collectors' fans and cleaning systems will be inspected for proper operation.

6.3.1 Opacity

On-going compliance with the opacity limit will be determined by continuous monitoring of opacity from the Finish Mills #1 and #2 stacks using continuous opacity monitoring systems (COMS) per 40 CFR 63.1350(f). For Finish Mill 3, opacity is monitored per 40 CFR 63.1350(f)(2)(i)-(iii) by conducting daily visible emissions observations (Method

22) of the mill sweep and separator baghouses (i.e., PM control devices (PMCD)) as discussed in Section 6.5.

6.4 Maintenance Techniques

The affected seals and housing structures of the associated finish mill transfer equipment (air slides, bucket elevators, and piping systems) are periodically inspected for excessive wear and damage, and are repaired or replaced as necessary. Inspections will be conducted according to the Martinsburg Plant SOP.

Associated dust collectors are periodically inspected for damage to the dust collector skeleton, equipment associated with cleaning, collection hopper(s), and dust collection bags. Inspection program details are provided in Section 8.0. Inspections will be conducted according to the Martinsburg Plant SOP.

The Finish Mill #1 and Finish Mill #2 COMS will be maintained per the manufacturer's specifications and procedures for their operation are contained in the Martinsburg Plant SOP.

6.5 Monitoring Procedures

Finish Mills #1 and #2 are equipped with COMS and will be measuring opacity per 40 CFR 63.1350(f)(4). Finish Mill #3 does not have a COMS and will be monitoring opacity per the requirements of 40 CFR 63.1350(f)(2)(i)-(iii).

6.5.1 Continuous Opacity Monitoring System (COMS)

Per 40 CFR 63.1350(f)(4), a continuous opacity monitor system can be used as an indicator of compliance with the opacity standards for the finish mill systems. Finish Mill #1 and Finish Mill #2 are each equipped with a COMS which is calibrated, operated, and maintained in accordance with the provisions of 40 CFR Part 63 Subpart A and PS-1 of Appendix B to Part 60.

- If the COMS are not operational, perform daily visual opacity observations of the Finish Mill #1 and Finish Mill #2 stacks as outlined in Section 6.5.2.

6.5.2 Daily Visual Emission Observations

Opacity (i.e., visual emissions) is measured for Finish Mill #3 using EPA Method 22 of Appendix A to 40 CFR Part 60 and Method 9 of Appendix A to 40 CFR Part 60, visible emission evaluation methods. In the event of COMS being non-operational, Finish Mill #1 and Finish Mill #2 opacity will also be measured using the following methods:

- Conduct a daily 6-minute Method 22 visual emissions observation of each

finish mill baghouse each day the affected source is in operation.

- If visible emissions are observed, initiate corrective actions within 1-hour. Subsequently, within 24-hours of the end of the Method 22 test in which visible emissions were observed, conduct a follow up 6-minute Method 22 test of each stack from which visible emissions were observed during the previous 6-minute Method 22 test.

- If visible emissions are observed during the follow-up Method 22 test, conduct a 30-minute Method 9 test within 1-hour.

Sample Method 22 observation records are included as Attachment B.

6.6 Corrective Actions

6.6.1 Visual Emission Observation Response Procedures

The corrective actions provided in this section were developed to satisfy the requirements of 40 CFR 63.1350(f)(2). The procedures outlined below must be initiated within one-hour of observing visual emissions as outlined in 40 CFR 63.1350(f)(2).

6.6.1.1 Immediate Response Procedures

The following actions will be taken within one-hour of observing visual emissions following the Method 22 procedures:

(1) Record the time and location of the visual emissions observation;

(2) Inform the Environmental Manager (or other responsible personnel) of the occurrence of a visual emissions observation, including the time and location;

(3) If possible, attempt to immediately identify the cause and take the appropriate action to eliminate the visible emissions.

(4) Within 24 hours of observing visible emissions, conduct a follow-up Method 22 reading.

(5) If visible emissions are observed during the follow-up Method 22, an opacity reading must be taken by a certified reader using Method 9 of Appendix A of 40 CFR Part 60. The duration of the Method 9 test shall be 30 minutes. If none of the 6-minute average opacity values exceed 10%, the unit may continue to operate as normal.

6.6.1.2 Subsequent Response Procedures

The following response procedures will be initiated if the visual emissions observation (Method 9) test conducted indicates an exceedance of the opacity limit:

(1) If readings in excess of the criteria listed above are determined, inspection of the APCD will be initiated to determine the cause of the visible emissions. The inspections will include systematically isolating dust collector compartment(s) in order to identify and locate the cause of the emissions. If necessary, after system shutdown, the dust collector will be shut down and an internal inspection conducted in order to identify and locate the cause of emissions.

(2) Based on the results of the inspection, initiate maintenance as appropriate.

(3) Record the duration of the excess emissions event and the maintenance performed on the baghouse, as required by 40 CFR 63.10(b)(2).

Once determined, the cause(s) of the visible emissions will be corrected as expeditiously as possible.

6.6.2 COMS Deviation Response Procedures

As required by 40 CFR 63.1347(a)(2), this section provides procedures for corrective actions to be taken pursuant to 40 CFR 63.1350(f)(3) in the event that visible emissions are observed during any Method 22 visible emissions test. The procedures outlined below must be initiated, upon discovery, when a 6-minute block period exceeds 10% opacity.

(1) The deviation should be noted and a written explanation describing the cause should be provided.

(2) Initiate process changes in accordance with proper procedures to bring the finish mill back into compliance (i.e., the opacity below the 10% limit).

(3) When the process does not allow changes to be made to bring the finish mill back into compliance, shut the appropriate process down and initiate maintenance as appropriate.

(a) Record the maintenance performed on the process and/or baghouse as required by 40 CFR 63.10(b)(2).

(b) Once maintenance repairs are complete and a thorough inspection of the completed work has shown it to be satisfactory, the process can be put back on line.

In the event that Finish Mill #1 or Finish Mill #2 COMS is not operating, perform a daily 6-minute Method 22 test, as specified in Section 6.5.2, to determine if the opacity is back in compliance once the process is back on line.

7.0 OPEN CLINKER STORAGE PILES

7.1 Regulatory Standards

40 CFR 63.1341 - Definitions

Open clinker storage pile means a clinker storage pile on the ground for more than three days that is not completely enclosed in a building or structure.

40 CFR 63.1343(c) – Open Clinker Storage Piles

(c) Open clinker storage pile. The owner or operator of an open clinker storage pile must prepare, and operate in accordance with, the fugitive dust emissions control measures, described in their operation and maintenance plan (see § 63.1347 of this subpart), that is appropriate for the site conditions as specified in paragraphs (c)(1) through (3) of this section. The operation and maintenance plan must also describe the measures that will be used to minimize fugitive dust emissions from piles of clinker, such as accidental spillage, that are not part of open clinker storage piles.

(1) The operation and maintenance plan must identify and describe the location of each current or future open clinker storage pile and the fugitive dust emissions control measures the owner or operator will use to minimize fugitive dust emissions from each open clinker storage pile.

(2) For open clinker storage piles, the operations and maintenance plan must specify that one or more of the following control measures will be used to minimize to the greatest extent practicable fugitive dust from open clinker storage piles: Locating the source inside a partial enclosure, installing and operating a water spray or fogging system, applying appropriate chemical dust suppression agents, use of a wind barrier, compaction, use of tarpaulin or other equally effective cover or use of a vegetative cover. You must select, for inclusion in the operations and maintenance plan, the fugitive dust control measure or measures listed in this paragraph that are most appropriate for site conditions. The plan must also explain how the measure or measures selected are applicable and appropriate for site conditions. In addition, the plan must be revised as needed to reflect any changing conditions at the source.

(3) Temporary piles of clinker that result from accidental spillage or clinker storage cleaning operations must be cleaned up within 3 days.

7.2 Clinker Storage Piles Locations and Control Measures

Table 3 below provides a list of all current locations of existing open clinker storage piles at the Plant. These existing locations are also displayed on the Plant map shown in Figure 1.

Table 3 – Open Clinker Storage Pile Locations

EP ID	Clinker Pile Description	Fugitive Dust Control Measure(s)	Control Measure(s) Description
EP37.08	Limestone/Clinker Storage Pile (Quarry)	Partial Enclosure and Water Spray	Clinker is stored within the natural enclosure of the lower level of the quarry and treated with water spray.
EP37.11	Limestone/Clinker Storage Pile (Outside Craneway)	Partial Enclosure	Clinker is stored within a three-sided enclosure adjacent to the Craneway Storage Building.
EP39.09	Inert Material Storage Pile (Within Mines)	Partial Enclosure	Clinker is stored within underground mines that create a natural three-sided enclosure with roof.
EP14.08	Clinker Stockpile (Craneway)	Partial Enclosure	Clinker is stored within the Craneway Building, which is completely enclosed with the exception of access points.
EP27.07	Outdoor Clinker Storage Piles[1]	Tarpaulin/Dust Suppression	A dust suppression (i.e., water spray) machine was utilized during the creation of the piles after which they were professionally covered with tarps.

Control Measure Justification

All fugitive dust control measures were selected as the most appropriate based on the location of the existing open clinker storage pile and the existing site conditions associated with each existing open clinker storage pile. Existing structures such as the quarry, underground mines, and the Craneway Building provide an inherent wind barrier for the partially enclosed existing open clinker storage piles and result in minimizing fugitive dust emissions. A structure could not feasibly be used for the existing outdoor open clinker storage piles; therefore, both dust suppression and professional tarps were employed by the Plant to minimize dust from these existing open clinker storage piles to the greatest extent possible given the existing site conditions.

All fugitive dust control measures described in Table 3 are employed at all times including periods of Plant startup and shutdown.

SPECTRUM Environmental Sciences, Inc.

Figure 1
Essroc Cement Corporation
Martinsburg Plant Open Clinker Storage Pile Locations

7.3 Temporary Clinker Storage Pile Procedures

Temporary piles of clinker that result from accidental spillage or clinker storage cleaning operations will be cleaned up within 3 days. Best management practices will be employed by the Plant until the temporary piles of clinker are reclaimed. Temporary clinker storage piles that remain after 3 days will be considered open clinker storage piles and will immediately be managed through the use of one of the following approved control measures as outlined in 40 CFR 63.1343(c)(2):

- Partial enclosure,
- Installing and operating a water spray or fogging system,
- Applying appropriate chemical dust suppression agents,
- Use of a wind barrier,
- Compaction,
- Use of tarpaulin or other equally effective cover, or
- Use of a vegetative cover.

The fugitive dust control measure(s) that is deemed most appropriate based on the location of the new open clinker storage pile and the existing site conditions will be utilized.

The WV DEP will be notified via email of the existence of any new open clinker storage piles within 7 days of it being considered a new open clinker storage pile. The email communication will specify the location of the new open clinker storage pile, the reason the pile was not able to be reclaimed within 3 days, the fugitive dust suppression control measures being utilized, and the plan for remediation of the open clinker storage pile.

8.0 INSPECTION PROGRAM

The inspection program addresses the inspection of all equipment critical to Plant compliance with applicable PC MACT standards. The following paragraphs set forth inspection procedures for affected equipment.

8.1 Solid Material Weigh Feeders

Equipment Locations: Raw material, clinker storage silos, and finish mill feed bins; and kiln feed scales and flow meters.

Equipment: Weigh belt feeders and cabling.

Inspection Procedure: Check the weigh belt for obstructions, alignment, and rips/tears in belting; skirting damage; and cable damage.

8.2 Transfer Points – Housing and Skirting Only

Equipment Locations: Raw material, raw feed, solid fuel, and clinker/gypsum.

Equipment: Housing and skirting.

Inspection Procedure: Check housing and skirting for damage, leaks, gaps, missing pieces, inadequate sealing, and corrosion.

8.3 Screw Conveyor Transfer Points

Equipment Locations: Kiln feed storage and handling system, solid fuel, clinker/gypsum, and finish mill systems.

Equipment: Screw conveyors and drop chutes.

Inspection Procedure: Check screw housing and covers for damage, leaks, gaps, missing pieces, inadequate sealing, and excessive corrosion.

8.4 Pneumatic Equipment

Equipment Locations: Raw feed, kiln feed, cement handling, and solid fuel handling systems.

Equipment: Pump feed hopper, transfer pump, and transfer lines.

Inspection Procedure: Check hopper housing and transfer connections for damage, leaks, gaps, missing pieces, inadequate sealing, and corrosion. Check the transfer pump

seals for leaks. Check transfer lines, piping supports, and associated flanges for leaks, damage, and excessive corrosion.

8.5 Dust Collectors

Equipment Locations: See Attachment A.

Equipment: Damper system and motor, dust collector structure, and fabric filters.

Inspection Procedure: Check the dust collector skeleton, bag/filter cleaning equipment (e.g., blowers/jets, poppets, solenoids, etc.), collection hopper, and dust collection bag attachment structure and bags for damage, excessive corrosion, gaps, leaks, and seals.

8.6 Air Slides

Equipment Locations: Kiln feed, raw mill, finish mill, and cement transfer systems.

Equipment: Air slide housing, fabric, blower, and dust collector connections.

Inspection Procedure: Check air slide housing and dust collector connections for damage, corrosion, and leaks.

8.7 Cement Kiln Combustion System Components

Equipment Locations: PH/PC kiln system.

Equipment: Fuel burner pipe and assembly and primary combustion air supply.

Inspection Procedure: Check burner pipe housings and fuel delivery equipment for damage, leaks, gaps, missing pieces, inadequate sealing, and corrosion.

9.0 RECORDKEEPING REQUIREMENTS

Appropriate records of the operating, maintenance, monitoring and inspection activities conducted pursuant to this O&M Plan will be maintained on file at the Plant in accordance with 40 CFR 63.1355. The relevant files will be recorded in a suitable form and readily available for inspection and review as required by 40 CFR 63.10(b)(1). The files shall be retained for at least five years following the date of each occurrence, maintenance, corrective action, report, or record. At a minimum, the most recent two years of data shall be retained onsite. The remaining three years of data may be retained offsite.

10.0 REPORTING REQUIREMENTS

Per 40 CFR 63.1354(b)(9), the owner or operator shall submit a summary report semi-annually which contains the following information:

- All exceedences of maximum control device inlet gas temperature limits.
- All failures to calibrate thermocouples and other temperature sensors as required.
- The results of any combustion system component inspections conducted within the reporting period.
- All failures to comply with any provision of the O&M Plan. Per 40 CFR 63.1347(b), failure to comply with any provision of the O&M Plan shall be considered a violation of the standard.
- For each PM CPMS, HCl CEMS, Hg CEMS, and THC CEMS, within 60 days after the reporting periods, you must submit reports to the EPA's WebFIRE database by using the Compliance and Emissions Data Reporting Interface (CEDRI) that is accessed through the EPA's Central Data Exchange (CDX) (*www.epa.gov/cdx*). You must use the appropriate electronic reporting form in CEDRI or provide an alternate electronic file consistent with the EPA's reporting form output format. For each reporting period, the reports must include all of the calculated 30-operating day rolling average values derived from the CEMS.
- In response to each violation of an emissions standard or established operating parameter limit, the date, duration and description of each violation and the specific actions taken for each violation including inspections, corrective actions and repeat performance tests and the results of those actions.

The Summary Report shall be titled "*Summary Report - Gaseous and Opacity Excess Emission and Continuous Monitoring System Performance*" and shall also include the following information as specified in 40 CFR 63.10(e)(3)(vi):

- Company name and address of the affected source;
- An identification of each hazardous air pollutant monitored at the affected source;
- The beginning and ending dates of the reporting period;
- A brief description of the process units;
- The emission and operating parameter limitations specified in the relevant standard(s);
- The monitoring equipment manufacturer(s) and model number(s);

- The date of the latest compliance monitoring system (CMS) certification or audit;
- The total operating time of the affected source during the reporting period;
- An emission data summary (for each COMS, Thermocouple, CPMS, or CEMS), including the total duration of excess emissions during the reporting period (recorded in minutes for opacity and hours for gases), the total duration of excess emissions expressed as a percent of the total source operating time during that reporting period, and a breakdown of the total duration of excess emissions during the reporting period into those that are due to startup/shutdown, control equipment problems, process problems, other known causes, and other unknown causes;
- A CMS performance summary (for each COMS, Thermocouple, CPMS, or CEMS), including the total CMS downtime during the reporting period (recorded in minutes for opacity and hours for gases), the total duration of CMS downtime expressed as a percent of the total source operating time during that reporting period, and a breakdown of the total CMS downtime during the reporting period into periods that are due to monitoring equipment malfunctions, non-monitoring equipment malfunctions, quality assurance/quality control calibrations, other known causes, and other unknown causes;
  - Per 40 CFR 63.1354(b)(10) an Excess Emission and CMS Performance Report is only required to be submitted for continuous monitors that experience downtime >10% of the total operating time during the reporting period.
- A description of any changes in CMS, processes, or controls since the last reporting period;
- The name, title, and signature of the responsible official who is certifying the accuracy of the report; and
- The date of the report.

11.0 STARTUP AND SHUTDOWN

11.1 Regulatory Applicability

The definitions of startup and shutdown per 40 CFR 63.1341 are as follows:

Startup means the time from when a shutdown kiln first begins firing fuel until it begins producing clinker. Startup begins when a shutdown kiln turns on the induced draft fan and begins firing fuel in the main burner. Startup ends when feed is being continuously introduced into the kiln for at least 120 minutes or when the feed rate exceeds 60 percent of the kiln design limitation rate, whichever occurs first.

Shutdown means the cessation of kiln operation. Shutdown begins when feed to the kiln is halted and ends when continuous kiln rotation ceases.

The Plant will meet the requirements of 40 CFR 63.1346(g) where:

(1) During startup, the Plant could potentially use any one or combination of the following clean fuels: natural gas, synthetic natural gas, propane, distillate oil, synthesis gas (syngas), and ultra-low sulfur diesel (ULSD) until the kiln reaches a temperature of 1,200 degrees Fahrenheit.

(2) Combustion of the primary kiln fuel may commence once the kiln temperature reaches 1,200 degrees Fahrenheit.

(3) All air pollution control devices must be turned on and operating prior to combusting any fuel.

(4) The Plant will keep records as specified in 40 CFR 63.1355 during periods of startup and shutdown.

The Plant will perform continuous compliance by operating all air pollution control devices during periods of startup and shutdown per 40 CFR 63.1348(b)(9).

11.2 Startup

Cement Kiln Startup Procedures

Startup of the PH/PC kiln system is performed in stages. These stages include: 1) air pollution control device (APCD) startup; 2) preheat and PH/PC kiln rotation; 3) fuel feed ramp up; and 4) PH/PC kiln feed initiation.

Prior to preheating, all APCD's should be energized, and the ID fan drives should be connected. Preheating begins by initiating a fuel oil torch in the kiln burner and precalciner vessel.

Per 40 CFR 63.1346(g), the Plant during startup is required to (1) use any one or combination of the following clean fuels: natural gas, synthetic natural gas, propane, distillate oil, synthesis gas (syngas), and ultra-low sulfur diesel (ULSD) until the PH/PC kiln reaches a temperature of 1,200 °F; (2) combustion of the primary kiln fuel may commence once the PH/PC kiln temperature reaches 1,200 degrees Fahrenheit; and (3) all air pollution control devices must be turned on and operating prior to combusting any fuel.

Once the preheat temperature is above approximately 1,200°F, the Solid Fuel Mill is started and solid fuel is co-fired with fuel oil. Fuel oil firing is stopped upon sustained, efficient combustion of solid fuel.

During the preheating process, the PH/PC kiln is turned periodically. As the temperature increases, the kiln is turned more frequently. When the temperature exceeds 1,400°F, continuous PH/PC kiln revolution is started.

Once the PH/PC kiln exit gas temperature reaches approximately 1,400°F, raw feed introduction into the PH/PC kiln is initiated. The kiln feed is ramped up slowly, and fuel is added as appropriate to maintain proper combustion and temperature profiles. Kiln feed and fuel continue to be ramped up until desired process feed rates are reached. Once the kiln feed rate is at 60 percent of the maximum design rate, the startup procedure is considered complete. Kiln feed and fuel continue to be ramped up until desired process feed rates are reached.

Once the decision is made to start making low alkali cement, startup of the ARS is initiated by opening of the baffle to allow a small portion of the PH/PC kiln exhaust gas, which is laden with high alkali material, out of the pyroprocessing system. The particulate matter which condenses out of the cooled/quenched exhaust gases is filtered from the air as it is processed through a fabric filter. The particulate matter is then conveyed to a storage silo or tank.

Startup of the clinker cooler initiates upon discharge of clinker from the PH/PC kiln into the clinker cooler. Clinker cooler startup begins with the activation of the associated dust collectors, cooler fans, and grates and begins when clinker is moved through the system. Gradually, the cooler grate speed and the cooler fan settings are increased. Once a steady flow of clinker is being discharged from the clinker cooler the startup process is considered complete.

The stepwise startup procedure for the PH/PC kiln and clinker cooler is described in the Martinsburg Plant SOPs.

11.3 Shutdown

Cement Kiln Shutdown Procedures

Once the decision is made to shut the PH/PC kiln system down, fuels are turned off and the kiln feed is stopped. The PH/PC kiln then continues to rotate. Cooling of the kiln interior is required and is accomplished by continuing to run the ID fan at minimal flow rates. PH/PC kiln rotation is required during cool down to prevent equipment damage. In the event the PH/PC kiln is to be emptied of all raw materials (where the kiln is rotated until empty), the dust collector cannot be shut down until this operation has completed and the PH/PC kiln has been stopped.

Shutdown of the ARS begins with closing of the baffle and is complete once all exhaust gases have been filtered through the ARS baghouse.

Shutdown of the clinker cooler begins once the clinker cooler has stopped receiving clinker from the PH/PC kiln. During shutdown, the grates are operated until the clinker cooler is empty. At this point, the cooler fans and grate motors are shut down. Clinker cooler system shutdown is complete once all clinker has been removed from the clinker cooler and the associated dust collectors and fans have been shut down.

The stepwise shutdown procedure for the PH/PC kiln and clinker cooler is described in the Martinsburg Plant SOPs.

ATTACHMENT A

LIST OF PC MACT AFFECTED SOURCES

MARTINSBURG PLANT
PC MACT Affected Source List

PSD Permit EP ID	CD Description	EU ID	EU Description	SOURCE TYPE	POINT OF COMPLIANCE	MONITORING FREQUENCY	MONITORING METHOD
RAW MATERIAL HANDLING							
EP37.08	-	EP37.08	Limestone/Clinker Storage Pile (Quarry)	FUGITIVE	Operated in accordance with the fugitive dust emission control measures as identified in Section 7.0 of this O&M Plan.		
EP37.11		EP37.11	Limestone/Clinker Storage Pile (Outside Craneway)	FUGITIVE	Operated in accordance with the fugitive dust emission control measures as identified in Section 7.0 of this O&M Plan.		
EP37.12		EP37.12	Limestone/Clinker Transfer to Craneway Storage Building	FUGITIVE	Building Sides/Roof/Vent	Monthly	10 Minute Method 22
CD39.03	Raw Material Discharge D\C 1	EP39.03.03	Shale bin to feeder	BAGHOUSE	DC Outlet	Monthly	10 Minute Method 22
		EP39.03.04	Shale bin feeder to conveyor				
		EP39.02.01	Limestone mix bin to feeder				
		EP39.02.02	Limestone mix feeder to conveyor				
		EP39.08.02	Sand silo to feeder				
		EP39.08.03	Sand silo feeder to conveyor				
		EP39.07.02	Pyrite silo to feeder				
		EP39.07.03	Pyrite silo feeder to conveyor				
CD39.04	Raw Material Discharge D\C 2	EP39.04.02	Shale silo 2 to feeder	BAGHOUSE	DC Outlet	Monthly	10 Minute Method 22
		EP39.04.03	Shale silo 2 feeder to conveyor				
CD39.06	Raw Mill Feeding D\C	EP39.06.01	Raw Mill Feed Conveyor	BAGHOUSE	DC Outlet	Monthly	10 Minute Method 22
CD31.01	Flyash Tank No.1 D\C	EP31.01	Fly Ash Tank #1	BAGHOUSE	DC Outlet	Monthly	10 Minute Method 22
EP39.09	-	EP39.09	Inert Raw Material Storage Pile (Within Mines)	FUGITIVE	Operated in accordance with the fugitive dust emission control measures as identified in Section 7.0 of this O&M Plan.		
RAW GRINDING AND KILN FEED							
CD40.01	Raw Mill High Zone D\C	EP40.01.01	RM Feed Conveyor to conveyor	BAGHOUSE	DC Outlet	Monthly	10 Minute Method 22
		EP40.01.02	Conveyor to split				
		EP40.01.03	Split to hopper				
		EP40.02.03	Elevator to conveyor				
		EP40.04.01	Split to Raw Mill				
CD40.02	Raw Mill Low Zone D\C	EP40.02.01	Conveyor to split	BAGHOUSE	DC Outlet	Monthly	10 Minute Method 22

MARTINSBURG PLANT
PC MACT Affected Source List

PSD Permit EP ID	CD Description	EU ID	EU Description	SOURCE TYPE	POINT OF COMPLIANCE	MONITORING FREQUENCY	MONITORING METHOD
		EP40.02.02	Split to bucket elevator				
		EP40.04.02	Raw Mill to conveyor				
		EP40.02.04	Conveyor to bucket elevator				
CD40.05	Raw Meal Air Slide D\C	EP40.05	Raw Meal Conveying Equipment	BAGHOUSE	DC Outlet	Monthly	10 Minute Method 22
CD40.06	Homo Silo Feeding D\C	EP40.06	Homogenizing Silo Feeding Equipment	BAGHOUSE	DC Outlet	Monthly	10 Minute Method 22
CD40.07	Homo Silo Discharge D\C	EP40.07	Homogenizing Silo Discharging Equipment	BAGHOUSE	DC Outlet	Monthly	10 Minute Method 22
CD40.08	Top of Homogenizing Silo	EP40.08	Top of Homogenizing Silo	BAGHOUSE	DC Outlet	Monthly	10 Minute Method 22
CD42.02	Kiln Feeding Bucket Elevator D\C	EP42.02	Kiln Feeding Bucket Elev DC	BAGHOUSE	DC Outlet	Monthly	10 Minute Method 22
CD42.03	Kiln Feeding D\C 1	EP42.03	Kiln Feed Belt	BAGHOUSE	DC Outlet	Monthly	10 Minute Method 22
CD42.05	Kiln Feeding D\C 2	EP42.05	Kiln Feed Belt	BAGHOUSE	DC Outlet	Monthly	10 Minute Method 22
PREHEATER/PRECALCINER KILN AND CLINKER COOLER & SOLID FUEL GRINDING SYSTEM							
CD41.04	Alternate Fuel Feeding System D/C	EP41.04	Alternate Fuel Feeding System	BAGHOUSE	Main Stack	Continuous	CEMS, CPMS
CD41.05	Alternate Fuel dosing System D/C	EP41.05	Alternate Fuel dosing System	BAGHOUSE	Main Stack	Continuous	CEMS, CPMS
CD42.04	Inline Raw Mill / PH/PC Kiln / Clinker Cooler & Bypass & Coal Mill D\Cs	EP42.04	Kiln System - Inline Raw Mill / PH/PC Kiln / Clinker Cooler	BAGHOUSE	Main Stack	Continuous	CEM, CPMS
		EP42.08	Kiln Bypass Baghouse DC	BAGHOUSE			
		EP41.03.01	Coal Mill	BAGHOUSE			
CD42.01	Cement Fringe Bin D\C	EP42.01	Cement Fringe Bin	BAGHOUSE	DC Outlet	Monthly	10 Minute Method 22
CD42.06	Lime Storage D\C	EP42.06	Lime Storage for Scrubber System	BAGHOUSE	DC Outlet	Monthly	10 Minute Method 22
CD42.07	Bypass Truck Spout Dedusting	EP42.07	Bypass Truck Spout Dedusting	BAGHOUSE	DC Outlet	Monthly	10 Minute Method 22
CD31.02	Bypass Dust Tank D\C	EP31.02	Bypass Dust Tank	BAGHOUSE	DC Outlet	Monthly	10 Minute Method 22
CD31.03	Bypass Dust Loadout D\C	EP31.03	Bypass Dust silo/loadout	BAGHOUSE	DC Outlet	Monthly	10 Minute Method 22
CLINKER/GYPSUM/FM ADDITIVE HANDLING AND STORAGE							
CD43.03	Clinker Storage Feeding D\C	EP43.05	Clinker conveyor to big clinker silo	BAGHOUSE	DC Outlet	Monthly	10 Minute Method 22

MARTINSBURG PLANT
PC MACT Affected Source List

PSD Permit EP ID	CD Description	EU ID	EU Description	SOURCE TYPE	POINT OF COMPLIANCE	MONITORING FREQUENCY	MONITORING METHOD
CD43.19	Top of LA Clinker Silo DC	EP43.19	Top of LA Clinker Silo	BAGHOUSE	DC Outlet	Monthly	10 Minute Method 22
CD43.20	Normal Clinker Bin at Pan Conveyor 73 DC	EP43.20	Normal Clinker Bin at Pan Conveyor 73	BAGHOUSE	DC Outlet	Monthly	10 Minute Method 22
CD43.21	Top of Normal Clinker Silo DC	EP43.21	Top of Normal Clinker Silo	BAGHOUSE	DC Outlet	Monthly	10 Minute Method 22
CD43.04	Small Clinker Storage Feeding D\C	EP43.04	Clinker conveyor to clinker silo	BAGHOUSE	DC Outlet	Monthly	10 Minute Method 22
CD43.06	Small Clinker Storage Discharge D\C	EP43.06.01	Low Alkali Clinker Silo to upper conveyors	BAGHOUSE	DC Outlet	Monthly	10 Minute Method 22
		EP43.06.02	Upper conveyors to lower conveyor				
		EP43.06.03	Low Alkali Clinker silo to lower conveyor				
CD43.07	Clinker Storage Discharge D\C	EP43.07.01	Big clinker silo to upper conveyor1	BAGHOUSE	DC Outlet	Monthly	10 Minute Method 22
		EP43.07.02	Big clinker silo to upper conveyor2				
		EP43.07.03	Big clinker silo to lower conveyor				
		EP43.07.04	Big clinker silo to short conveyor				
		EP43.07.05	Short conveyor to lower conveyor				
CD43.08	Finish Mill Conveying D\C1	EP43.08	Upper conveyor 1 to FM feed hoppers belt	BAGHOUSE	DC Outlet	Monthly	10 Minute Method 22
CD43.09	Finish Mill Conveying D\C2	EP43.09	Lower conveyor to FM feed hoppers belt	BAGHOUSE	DC Outlet	Monthly	10 Minute Method 22
CD43.13	Finish Mill Conveying D\C3	EP43.13	Upper conveyor 2 to FM feed hoppers belt	BAGHOUSE	DC Outlet	Monthly	10 Minute Method 22
CD43.14	Finish Mill 1 & 2 Hoppers D\C	EP43.14	Conveyor to clinker feeding hoppers (FM1 &2)	BAGHOUSE	DC Outlet	Monthly	10 Minute Method 22
		EP43.15	Conveyor to lower conveyor (FM3)	BAGHOUSE	DC Outlet	Monthly	10 Minute Method 22
CD43.16	Finish Mill 3 Hopper D\C	EP43.16	Lower conveyor to clinker feeding hopper (FM3)	BAGHOUSE	DC Outlet	Monthly	10 Minute Method 22
CD43.17	Normal Clinker Bin - Bin Vent	EP43.17	Normal Clinker Bin - Bin Vent	BAGHOUSE	DC Outlet	Monthly	10 Minute Method 22
EP26.06.03	-	EP26.06.03	Gypsum/Synthetic Gypsum truck unloading to storage hall	FUGITIVE	Building Sides/Roof/Vent	Monthly	10 Minute Method 22
EP26.06.04	-	EP26.06.04	Clam bucket to gypsum/synthetic gypsum pile	FUGITIVE	Building Sides/Roof/Vent	Monthly	10 Minute Method 22

MARTINSBURG PLANT
PC MACT Affected Source List

PSD Permit EP ID	CD Description	EU ID	EU Description	SOURCE TYPE	POINT OF COMPLIANCE	MONITORING FREQUENCY	MONITORING METHOD
EP26.06.05	-	EP26.06.05	Gypsum/synthetic gypsum pile to clam bucket	FUGITIVE	Building Sides/Roof/Vent	Monthly	10 Minute Method 22
EP26.06.06	-	EP26.06.06	Clam bucket to gypsum/synthetic gypsum bin (FM1/2/3)	FUGITIVE	Building Sides/Roof/Vent	Monthly	10 Minute Method 22
EP26.07.01	-	EP26.07.01	Limestone Pile to clam bucket	FUGITIVE	Building Sides/Roof/Vent	Monthly	10 Minute Method 22
EP26.07.02	-	EP26.07.02	Clam bucket to limestone bin (FM1/2/3)	FUGITIVE	Building Sides/Roof/Vent	Monthly	10 Minute Method 22
EP27.01	-	EP27.01	Conveyor to clinker hopper	FUGITIVE	Building Sides/Roof/Vent	Monthly	10 Minute Method 22
EP27.02	-	EP27.02	Clinker hopper to crane	FUGITIVE	Building Sides/Roof/Vent	Monthly	10 Minute Method 22
EP27.03	-	EP27.03	Crane to clinker pile	FUGITIVE	Building Sides/Roof/Vent	Monthly	10 Minute Method 22
EP14.08	-	EP14.08	Clinker stockpile (Craneway)	FUGITIVE	Operated in accordance with the fugitive dust emission control measures as identified in Section 7.0 of this O&M Plan.		
EP27.04	-	EP27.04	Clinker pile to crane	FUGITIVE	Building Sides/Roof/Vent	Monthly	10 Minute Method 22
EP27.05	-	EP27.05	Crane to clinker bins (FM1/2/3)	FUGITIVE	Building Sides/Roof/Vent	Monthly	10 Minute Method 22
EP27.06	-	EP27.06	Transfer to Outdoor Clinker Storage Pile	FUGITIVE	Building Sides/Roof/Vent	Monthly	10 Minute Method 22
EP27.07	-	EP27.07	Outdoor Clinker Storage Pile - Tarped	FUGITIVE	Operated in accordance with the fugitive dust emission control measures as identified in Section 7.0 of this O&M Plan.		
EP26.08	-	EP26.08	Outdoor Clinker Storage Pile Reclaim	FUGITIVE	Building Sides/Roof/Vent	Monthly	10 Minute Method 22
FINISH MILL SYSTEMS							
CD44.01	Finish Mill 2 Feeding D\C1	EP44.01	L.A. clinker bin to FM2 conveyor	BAGHOUSE	DC Outlet	Monthly	10 Minute Method 22
CD44.02	Finish Mill 1 Feeding D\C1	EP44.02	Clinker bin to FM1 conveyor	BAGHOUSE	DC Outlet	Monthly	10 Minute Method 22
CD44.03	Finish Mill 2 Feeding D\C2	EP44.03	Clinker bin to FM2 conveyor	BAGHOUSE	DC Outlet	Monthly	10 Minute Method 22
CD44.04	Finish Mill 2 Feeding	EP44.04.01	Limestone bin to FM2 conveyor	BAGHOUSE	DC Outlet	Monthly	10 Minute Method 22

MARTINSBURG PLANT
PC MACT Affected Source List

PSD Permit EP ID	CD Description	EU ID	EU Description	SOURCE TYPE	POINT OF COMPLIANCE	MONITORING FREQUENCY	MONITORING METHOD
	D\C3	EP44.04.02	Gypsum/synthetic gypsum bin to FM2 conveyor	BAGHOUSE			
CD44.05	Finish Mill 1 Feeding D\C 2	EP44.05.01	Limestone bin to FM1 conveyor	BAGHOUSE	DC Outlet	Monthly	10 Minute Method 22
		EP44.05.02	Gypsum/synthetic gypsum bin to FM1 conveyor	BAGHOUSE			
CD19.02	Finish Mill 3 Baghouse D\C	EP19.01Pb	No. 3 Finish Mill Separator (Existing FM 10)	BAGHOUSE	DC Outlet	Daily	6 Minute Method 22
CD19.01	Finish Mill 3 Norblo D\C	EP19.01U	FM3 Feed bins to feeders	BAGHOUSE	DC Outlet	Daily	6 Minute Method 22
		EP19.01Pa.01	FM3 Feeders to belt conveyor 650	BAGHOUSE			
		EP19.01Pa.02	Belt conveyor 650 to FM3	BAGHOUSE			
		EP19.02	Finish Mill 3	BAGHOUSE			
CD44.06	Finish Mill 1 Conveying D\C	EP44.06	FM1 Conveyor to conveyor	BAGHOUSE	DC Outlet	Monthly	10 Minute Method 22
CD44.07	Finish Mill 1 High Zone D\C	EP44.07.01	Elevator to FM1 conveyor	BAGHOUSE	DC Outlet	Monthly	10 Minute Method 22
		EP44.07.02	FM1 Conveyor to bin	BAGHOUSE			
		EP44.07.03	Conveyor to Finish Mill 1	BAGHOUSE			
CD44.08	Finish Mill 1 Low Zone D\C	EP44.08.01	Finish Mill 1 to Conveyor	BAGHOUSE	DC Outlet	Monthly	10 Minute Method 22
		EP44.08.02	Bin to FM1 conveyor	BAGHOUSE			
		EP44.08.03	FM1 Conveyor to bucket elevator	BAGHOUSE			
CD44.09	Finish Mill 1 D\C	EP44.09	Finish Mill 1	BAGHOUSE	DC Outlet	Daily	6 Minute Method 22
CD44.13	Finish Mill 1 Discharge D\C	EP44.13	Finish Mill 1 Conveying	BAGHOUSE	DC Outlet	Monthly	10 Minute Method 22
CD44.14	Finish Mill 2 Conveying D\C	EP44.14	FM2 Conveyor to conveyor	BAGHOUSE	DC Outlet	Monthly	10 Minute Method 22
CD44.10	Finish Mill 2 High Zone D\C	EP44.10.01	FM2 Elevator to conveyor	BAGHOUSE	DC Outlet	Monthly	10 Minute Method 22
		EP44.10.02	FM2 Conveyor to bin	BAGHOUSE			
		EP44.10.03	Conveyor to Finish Mill 2	BAGHOUSE			
CD44.11	Finish Mill 2 Low Zone D\C	EP44.11.01	Finish Mill 2 to conveyor	BAGHOUSE	DC Outlet	Monthly	10 Minute Method 22
		EP44.11.02	Bin to FM2 conveyor	BAGHOUSE			
		EP44.11.03	FM2 Conveyor to bucket elevator	BAGHOUSE			

MARTINSBURG PLANT
PC MACT Affected Source List

PSD Permit EP ID	CD Description	EU ID	EU Description	SOURCE TYPE	POINT OF COMPLIANCE	MONITORING FREQUENCY	MONITORING METHOD
CD44.12	Finish Mill 2 D\C	EP44.12	Finish Mill 2	BAGHOUSE	DC Outlet	Daily	6 Minute Method 22
CD44.15	Finish Mill 2 Discharge D\C	EP44.15	Finish Mill 2 Conveying	BAGHOUSE	DC Outlet	Monthly	10 Minute Method 22
CD44.09 CD44.12	Finish Mill 1/2 Air Heater	EP44.16	Finish Mill 1/2 Air Heater	BAGHOUSE	DC Outlet	Daily	6 Minute Method 22
CD44.17	Finish Mills Reject Bin	EP44.17	Finish Mills Reject Bin	BAGHOUSE	DC Outlet	Monthly	10 Minute Method 22
CD44.18	Finish Mill 1 Reject Elevator High Zone DC	EP44.18	Finish Mill 1 Reject Elevator High Zone	BAGHOUSE	DC Outlet	Monthly	10 Minute Method 22
CD44.19	Finish Mill 2 Reject Elevator High Zone DC	EP44.19	Finish Mill 2 Reject Elevator High Zone	BAGHOUSE	DC Outlet	Monthly	10 Minute Method 22
CEMENT DISTRIBUTION							
CD45.01	Finish Mill 1 Airslides D\C	EP45.01	Finish Mill 1 airslides	BAGHOUSE	DC Outlet	Monthly	10 Minute Method 22
CD45.02	Finish Mill 2 Airslides D\C	EP45.02	Finish Mill 2 airslides	BAGHOUSE	DC Outlet	Monthly	10 Minute Method 22
CD45.03	Cement Silos Feeding D\C1	EP45.03	Finish Mill 1 to cement silos	BAGHOUSE	DC Outlet	Monthly	10 Minute Method 22
CD45.04	Cement Silos Feeding D\C2	EP45.04	Finish Mill 2 to cement silos	BAGHOUSE	DC Outlet	Monthly	10 Minute Method 22
CD45.05	Cement Silo A1 & A2 D\C	EP45.05	Cement Silo A1 & A2	BAGHOUSE	DC Outlet	Monthly	10 Minute Method 22
CD45.06	Cement Silo B1 & B2 D\C	EP45.06	Cement Silo B1 & B2	BAGHOUSE	DC Outlet	Monthly	10 Minute Method 22
CD45.07	Cement Silo C1 & C2 D\C	EP45.07	Cement Silo C1 & C2	BAGHOUSE	DC Outlet	Monthly	10 Minute Method 22
CD45.08	Truck Loadout 1 D\C	EP45.08	Bulk lane loadout 1	BAGHOUSE	DC Outlet	Monthly	10 Minute Method 22
CD45.09	Truck Loadout 2 D\C	EP45.09	Bulk lane loadout 2	BAGHOUSE	DC Outlet	Monthly	10 Minute Method 22
CD45.10	Truck Loadout 3 D\C	EP45.10	Bulk lane loadout 3	BAGHOUSE	DC Outlet	Monthly	10 Minute Method 22
CD45.11	Truck Loadout 4 D\C	EP45.11	Bulk lane loadout 4	BAGHOUSE	DC Outlet	Monthly	10 Minute Method 22
CD21.05	Middle Bank Silos 1 D\C	EP21.05	Middle Bank Silos 1 DC	BAGHOUSE	DC Outlet	Monthly	10 Minute Method 22
CD21.06	Middle Bank Silos 2 D\C	EP21.06	Middle Bank Silos 2 DC	BAGHOUSE	DC Outlet	Monthly	10 Minute Method 22
CD21.07	Middle Bank Silos 3 D\C	EP21.07	Middle Bank Silos 3 DC	BAGHOUSE	DC Outlet	Monthly	10 Minute Method 22
CD21.08	Middle Bank Silos 4 D\C	EP21.08	Middle Bank Silos 4 DC	BAGHOUSE	DC Outlet	Monthly	10 Minute Method 22

MARTINSBURG PLANT
PC MACT Affected Source List

PSD Permit EP ID	CD Description	EU ID	EU Description	SOURCE TYPE	POINT OF COMPLIANCE	MONITORING FREQUENCY	MONITORING METHOD
CD21.09	Middle Bank Silos 5 D\C	EP21.09	Middle Bank Silos 5 DC	BAGHOUSE	DC Outlet	Monthly	10 Minute Method 22
CD21.10	Middle Bank Vent 1 D\C	EP21.10	Middle Bank Bin Vent 1 - Silos Inlet	BAGHOUSE	DC Outlet	Monthly	10 Minute Method 22
CD21.11	Middle Bank Vent 2 D\C	EP21.11	Middle Bank Bin Vent 2 - Silos Inlet	BAGHOUSE	DC Outlet	Monthly	10 Minute Method 22
CD21.12	South Middle Bank CP Pump DC	EP21.12	South Middle Bank CP Pump	BAGHOUSE	DC Outlet	Monthly	10 Minute Method 22
CD21.13	North Middle Bank CP Pump DC	EP21.13	North Middle Bank CP Pump	BAGHOUSE	DC Outlet	Monthly	10 Minute Method 22
CD45.12	Rail Loadout 1 D\C	EP45.12	Bulk rail loadout 1	BAGHOUSE	DC Outlet	Monthly	10 Minute Method 22
CD45.13	Rail Loadout 2 D\C	EP45.13	Bulk rail loadout 2	BAGHOUSE	DC Outlet	Monthly	10 Minute Method 22
CD45.14	Cement Analyzer D\C	EP45.14	Cement Analyzer	BAGHOUSE	DC Outlet	Monthly	10 Minute Method 22
CD45.15	Transfer Airslide D\C at the Multi Cell	EP45.15	Transfer Airslide at the Multi Cell	BAGHOUSE	DC Outlet	Monthly	10 Minute Method 22
CD45.16	Rail Transloader D\C	EP45.16	Rail Transloader	BAGHOUSE	DC Outlet	Monthly	10 Minute Method 22
CD46.01	Truck Loadout Silo 1 D\C	EP46.01	Truck Loadout Silo 1	BAGHOUSE	DC Outlet	Monthly	10 Minute Method 22
CD46.02	Truck Loadout Silo 2 D\C	EP46.02	Truck Loadout Silo 2	BAGHOUSE	DC Outlet	Monthly	10 Minute Method 22
CD46.03	Truck Loadout Silo 3 D\C	EP46.03	Truck Loadout Silo 3	BAGHOUSE	DC Outlet	Monthly	10 Minute Method 22
CD46.04	Truck Loadout Silo 4 D\C	EP46.04	Truck Loadout Silo 4	BAGHOUSE	DC Outlet	Monthly	10 Minute Method 22
CD46.05	Truck Loadout Silo 5 D\C	EP46.05	Truck Loadout Silo 5	BAGHOUSE	DC Outlet	Monthly	10 Minute Method 22
CD46.06	Truck Loadout 5 D\C	EP46.06	Bulk loadout 5 - Truck Loadout Silos	BAGHOUSE	DC Outlet	Monthly	10 Minute Method 22
CD46.07	Truck Loadout 6 D\C	EP46.07	Bulk loadout 6 - Truck Loadout Silos	BAGHOUSE	DC Outlet	Monthly	10 Minute Method 22
CD20.04	East Bank Silos 1 D\C	EP20.04	East Bank Silos 1	BAGHOUSE	DC Outlet	Monthly	10 Minute Method 22
CD20.05	East Bank Silos 2 D\C	EP20.05	East Bank Silos 2	BAGHOUSE	DC Outlet	Monthly	10 Minute Method 22
CD20.06	East Bank Silos 3 D\C	EP20.06	East Bank Silos 3	BAGHOUSE	DC Outlet	Monthly	10 Minute Method 22
CD48.01	Packhouse D\C	EP48.01	Packhouse	BAGHOUSE	DC Outlet	Monthly	10 Minute Method 22
CD23.01	N.E. PACKER D/C	EP23.01	Packer #1 N.E.	BAGHOUSE	DC Outlet	Monthly	10 Minute Method 22
CD22.05	West Bank Silo #70/71 D\C	EP22.05	West Bank Silos #70/#71	BAGHOUSE	DC Outlet	Monthly	10 Minute Method 22
CD22.06	West Bank Silo #72 D\C	EP22.06	West Bank Silos #72	BAGHOUSE	DC Outlet	Monthly	10 Minute Method 22

MARTINSBURG PLANT
PC MACT Affected Source List

PSD Permit EP ID	CD Description	EU ID	EU Description	SOURCE TYPE	POINT OF COMPLIANCE	MONITORING FREQUENCY	MONITORING METHOD
CD22.07	West Bank Silo #84 D\C	EP22.07	West Bank Silos #84	BAGHOUSE	DC Outlet	Monthly	10 Minute Method 22
CD22.08	West Bank Silo Loadout Spout D\C	EP22.08	West Bank Silos Loadout Spout	BAGHOUSE	DC Outlet	Monthly	10 Minute Method 22
CD22.09	Dry Flyash Weigh Bin D\C	EP22.09	Dry Flyash Weigh Bin/Alleviator	BAGHOUSE	DC Outlet	Monthly	10 Minute Method 22

ATTACHMENT B

SAMPLE METHOD 22 OBSERVATION RECORDS

FINISH MILL DAILY METHOD 22 FORM

Week of _____ to _____

For each source circle YES or NO for if emissions were observed, or not operating if the source did not operate for the given day. Initial for each day's observations.

Permit ID	Description	MON	TUES	WED	THURS	FRI	SAT	SUN
CD19.02	Finish Mill 3 Baghouse D\C	YES NO Not Operating	YES NO Not Operating	YES NO Not Operating	YES NO Not Operating	YES NO Not Operating	YES NO Not Operating	YES NO Not Operating
CD19.01	Finish Mill 3 Norblo D\C	YES NO Not Operating	YES NO Not Operating	YES NO Not Operating	YES NO Not Operating	YES NO Not Operating	YES NO Not Operating	YES NO Not Operating
CD44.09	Finish Mill 1 D\C	YES NO Not Operating	YES NO Not Operating	YES NO Not Operating	YES NO Not Operating	YES NO Not Operating	YES NO Not Operating	YES NO Not Operating
CD44.12	Finish Mill 2 D\C	YES NO Not Operating	YES NO Not Operating	YES NO Not Operating	YES NO Not Operating	YES NO Not Operating	YES NO Not Operating	YES NO Not Operating
Observer's Initials								

Observer's Name_____

Instructions:

1. **Conduct a Daily 6-Minute Method 22 visual emissions observation on each source listed above that is in operation.**
2. **If visible emissions are observed, initiate corrective actions within 1 hour.**
3. **If visible emissions are observed, a second 6-Minute Method 22 observation must be conducted within 24 hours. If visible emissions are observed during the second Method 22 observation, a 30-Minute Method 9 Test must be conducted within 1 hour of the second observation.**

MONTHLY METHOD 22 FORM

MONTH_____ YEAR_____

INSTRUCTIONS:

1. **Conduct a monthly 10-minute visible emission observation for each source listed below while the source is in normal operation.**
2. **Record the Date of the observation, observer's initials, and indicate YES or NO for if emissions were observed.**
3. **If emissions are observed, conduct and document a 30-Minute Method 9 within one hour of observing emissions.**
4. **In lieu of individual transfer points the each side, roof, and vent of a building may be evaluated.**
5. **If a source does not operate during a given month, indicate so in the Emissions Observed Column.**

Permit EP ID	CD Description	EU ID	EU Description	DATE	INIT.	EMISSIONS OBSERVED?
CD39.03	Raw Material Discharge D\C 1	EP39.03.03	Shale bin to feeder			
		EP39.03.04	Shale bin feeder to conveyor			
		EP39.02.01	Limestone mix bin to feeder			
		EP39.02.02	Limestone mix feeder to conveyor			
		EP39.08.02	Sand silo to feeder			
		EP39.08.03	Sand silo feeder to conveyor			
		EP39.07.02	Pyrite silo to feeder			
		EP39.07.03	Pyrite silo feeder to conveyor			
CD39.04	Raw Material Discharge D\C 2	EP39.04.02	Shale silo 2 to feeder			
		EP39.04.03	Shale silo 2 feeder to conveyor			
CD39.06	Raw Mill Feeding D\C	EP39.06.01	Raw Mill Feed Conveyor			
CD31.01	Flyash Tank No.1 D\C	EP31.01	Fly Ash Tank #1			
CD40.01	Raw Mill High Zone D\C	EP40.01.01	RM Feed Conveyor to conveyor			
		EP40.01.02	Conveyor to split			
		EP40.01.03	Split to hopper			
		EP40.02.03	Elevator to conveyor			
		EP40.04.01	Split to Raw Mill			
CD40.02	Raw Mill Low Zone D\C	EP40.02.01	Conveyor to split			
		EP40.02.02	Split to bucket elevator			
		EP40.04.02	Raw Mill to conveyor			
		EP40.02.04	Conveyor to bucket elevator			
CD40.05	Raw Meal Air Slide D\C	EP40.05	Raw Meal Conveying Equipment			
CD40.06	Homo Silo Feeding D\C	EP40.06	Homogenizing Silo Feeding Equipment			

Permit EP ID	CD Description	EU ID	EU Description	DATE	INIT.	EMISSIONS OBSERVED?
CD40.07	Homo Silo Discharge D\C	EP40.07	Homogenizing Silo Discharging Equipment			
CD40.08	Top of Homo Silo D\C	EP40.08	Top of Homogenizing Silo			
CD42.02	Kiln Feeding Bucket Elevator D\C	EP42.02	Kiln Feeding Bucket Elev DC			
CD42.03	Kiln Feeding D\C 1	EP42.03	Kiln Feed Belt			
CD42.05	Kiln Feeding D\C 2	EP42.05	Kiln Feed Belt			
CD42.01	Cement Fringe Bin D\C	EP42.01	Cement Fringe Bin			
CD42.06	Lime Storage D\C	EP42.06	Lime Storage for Scrubber System			
CD31.02	Bypass Dust Tank D\C	EP31.02	Bypass Dust Tank			
CD31.03	Bypass Dust Loadout D\C	EP31.03	Bypass Dust silo/loadout			
CD43.03	Clinker Storage Feeding D\C	EP43.05	Clinker conveyor to big clinker silo			
CD43.19	Top of LA Clinker Silo DC	EP43.19	Top of LA Clinker Silo			
CD43.20	Normal Clinker Bin at Pan Conveyor 73 DC	EP43.20	Normal Clinker Bin at Pan Conveyor 73			
CD43.21	Top of Normal Clinker Silo DC	EP43.21	Top of Normal Clinker Silo			
CD43.04	Small Clinker Storage Feeding D\C	EP43.04	Clinker conveyor to clinker silo			
CD43.06	Small Clinker Storage Discharge D\C	EP43.06.01	Low Alkali Clinker Silo to upper conveyors			
		EP43.06.02	Upper conveyors to lower conveyor			
		EP43.06.03	Low Alkali Clinker silo to lower conveyor			
CD43.07	Clinker Storage Discharge D\C	EP43.07.01	Big clinker silo to upper conveyor1			
		EP43.07.02	Big clinker silo to upper conveyor2			
		EP43.07.03	Big clinker silo to lower conveyor			
		EP43.07.04	Big clinker silo to short conveyor			
		EP43.07.05	Short conveyor to lower conveyor			
CD43.08	Finish Mill Conveying D\C1	EP43.08	Upper conveyor 1 to FM feed hoppers belt			
CD43.09	Finish Mill Conveying D\C2	EP43.09	Lower conveyor to FM feed hoppers belt			
CD43.13	Finish Mill Conveying D\C3	EP43.13	Upper conveyor 2 to FM feed hoppers belt			
CD43.14	Finish Mill 1 & 2 Hoppers D\C	EP43.14	Conveyor to clinker feeding hoppers (FM1 &2)			

Permit EP ID	CD Description	EU ID	EU Description	DATE	INIT.	EMISSIONS OBSERVED?
		EP43.15	Conveyor to lower conveyor (FM3)			
CD43.16	Finish Mill 3 Hopper D\C	EP43.16	Lower conveyor to clinker feeding hopper (FM3)			
CD43.17	Normal Clinker Bin - Bin Vent	EP43.17	Normal Clinker Bin - Bin Vent			
EP04.04.03	All Fugitives located within Craneway Building	EP04.04.03	#1 stone system belt to limestone pile in craneway			Side N _____ Side E _____ Side S _____ Side W_____ Top _____ Vents _____
EP26.06.03		EP26.06.03	Gypsum/Synthetic Gypsum truck unloading to storage hall			
EP26.06.04		EP26.06.04	Clam bucket to gypsum/synthetic gypsum pile			
EP26.06.05		EP26.06.05	Gypsum/synthetic gypsum pile to clam bucket			
EP26.06.06		EP26.06.06	Clam bucket to gypsum/synthetic gypsum bin (FM1/2/3)			
EP26.07.01		EP26.07.01	Limestone Pile to clam bucket			
EP26.07.02		EP26.07.02	Clam bucket to limestone bin (FM1/2/3)			
EP27.01		EP27.01	Conveyor to clinker hopper			
EP27.02		EP27.02	Clinker hopper to crane			
EP27.03		EP27.03	Crane to clinker pile			
EP27.04		EP27.04	Clinker pile to crane			
EP27.05		EP27.05	Crane to clinker bins (FM1/2/3)			
CD44.01	Finish Mill 2 Feeding D\C1	EP44.01	L.A. clinker bin to FM2 conveyor			
CD44.02	Finish Mill 1 Feeding D\C1	EP44.02	Clinker bin to FM1 conveyor			
CD44.03	Finish Mill 2 Feeding D\C2	EP44.03	Clinker bin to FM2 conveyor			
CD44.04	Finish Mill 2 Feeding D\C3	EP44.04.01	Limestone bin to FM2 conveyor			
		EP44.04.02	Gypsum/synthetic gypsum bin to FM2 conveyor			
CD44.05	Finish Mill 1 Feeding D\C 2	EP44.05.01	Limestone bin to FM1 conveyor			
		EP44.05.02	Gypsum/synthetic gypsum bin to FM1 conveyor			
CD44.06	Finish Mill 1 Conveying D\C	EP44.06	FM1 Conveyor to conveyor			
CD44.07	Finish Mill 1 High Zone D\C	EP44.07.01	Elevator to FM1 conveyor			
		EP44.07.02	FM1 Conveyor to bin			
		EP44.07.03	Conveyor to Finish Mill 1			
CD44.08	Finish Mill 1 Low Zone D\C	EP44.08.01	Finish Mill 1 to Conveyor			
		EP44.08.02	Bin to FM1 conveyor			
		EP44.08.03	FM1 Conveyor to bucket elevator			
CD44.13	Finish Mill 1 Discharge D\C	EP44.13	Finish Mill 1 Conveying			

Permit EP ID	CD Description	EU ID	EU Description	DATE	INIT.	EMISSIONS OBSERVED?
CD44.14	Finish Mill 2 Conveying D\C	EP44.14	FM2 Conveyor to conveyor			
CD44.10	Finish Mill 2 High Zone D\C	EP44.10.01	FM2 Elevator to conveyor			
		EP44.10.02	FM2 Conveyor to bin			
		EP44.10.03	Conveyor to Finish Mill 2			
CD44.11	Finish Mill 2 Low Zone D\C	EP44.11.01	Finish Mill 2 to conveyor			
		EP44.11.02	Bin to FM2 conveyor			
		EP44.11.03	FM2 Conveyor to bucket elevator			
CD44.15	Finish Mill 2 Discharge D\C	EP44.15	Finish Mill 2 Conveying			
CD44.17	Finish Mills Reject Bin	EP44.17	Finish Mills Reject Bin			
CD44.18	Finish Mill 1 Reject Elevator High Zone DC	EP44.18	Finish Mill 1 Reject Elevator High Zone			
CD44.19	Finish Mill 2 Reject Elevator High Zone DC	EP44.19	Finish Mill 2 Reject Elevator High Zone			
CD45.01	Finish Mill 1 Airslides D\C	EP45.01	Finish Mill 1 airslides			
CD45.02	Finish Mill 2 Airslides D\C	EP45.02	Finish Mill 2 airslides			
CD45.03	Cement Silos Feeding D\C1	EP45.03	Finish Mill 1 to cement silos			
CD45.04	Cement Silos Feeding D\C2	EP45.04	Finish Mill 2 to cement silos			
CD45.05	Cement Silo A1 & A2 D\C	EP45.05	Cement Silo A1 & A2			
CD45.06	Cement Silo B1 & B2 D\C	EP45.06	Cement Silo B1 & B2			
CD45.07	Cement Silo C1 & C2 D\C	EP45.07	Cement Silo C1 & C2			
CD45.08	Truck Loadout 1 D\C	EP45.08	Bulk lane loadout 1			
CD45.09	Truck Loadout 2 D\C	EP45.09	Bulk lane loadout 2			
CD45.10	Truck Loadout 3 D\C	EP45.10	Bulk lane loadout 3			
CD45.11	Truck Loadout 4 D\C	EP45.11	Bulk lane loadout 4			
CD45.14	Cement Analyzer D\C	EP45.14	Cement Analyzer			
CD45.15	Transfer Airslide D\C at the Multi Cell	EP45.15	Transfer Airslide at the Multi Cell			
CD45.16	Rail Transloader D\C	EP45.16	Rail Transloader			
CD21.05	Middle Bank Silos 1 D\C	EP21.05	Middle Bank Silos 1 DC			
CD21.06	Middle Bank Silos 2 D\C	EP21.06	Middle Bank Silos 2 DC			
CD21.07	Middle Bank Silos 3 D\C	EP21.07	Middle Bank Silos 3 DC			
CD21.08	Middle Bank Silos 4 D\C	EP21.08	Middle Bank Silos 4 DC			

Permit EP ID	CD Description	EU ID	EU Description	DATE	INIT.	EMISSIONS OBSERVED?
CD21.09	Middle Bank Silos 5 D\C	EP21.09	Middle Bank Silos 5 DC			
CD21.10	Middle Bank Vent 1 D\C	EP21.10	Middle Bank Bin Vent 1 - Silos Inlet			
CD21.11	Middle Bank Vent 2 D\C	EP21.11	Middle Bank Bin Vent 2 - Silos Inlet			
CD21.12	Middle Bank Vent 3 D\C	EP21.12	Middle Bank Bin Vent 3 - Silos Discharge			
CD21.13	Middle Bank Vent 4 D\C	EP21.13	Middle Bank Bin Vent 4 - Silos Discharge			
CD45.12	Rail Loadout 1 D\C	EP45.12	Bulk rail loadout 1			
CD45.13	Rail Loadout 2 D\C	EP45.13	Bulk rail loadout 2			
CD46.01	Truck Loadout Silo 1 D\C	EP46.01	Truck Loadout Silo 1			
CD46.02	Truck Loadout Silo 2 D\C	EP46.02	Truck Loadout Silo 2			
CD46.03	Truck Loadout Silo 3 D\C	EP46.03	Truck Loadout Silo 3			
CD46.04	Truck Loadout Silo 4 D\C	EP46.04	Truck Loadout Silo 4			
CD46.05	Truck Loadout Silo 5 D\C	EP46.05	Truck Loadout Silo 5			
CD46.06	Truck Loadout 5 D\C	EP46.06	Bulk loadout 5 - Truck Loadout Silos			
CD46.07	Truck Loadout 6 D\C	EP46.07	Bulk loadout 6 - Truck Loadout Silos			
CD20.04	East Bank Silos 1 D\C	EP20.04	East Bank Silos 1			
CD20.05	East Bank Silos 2 D\C	EP20.05	East Bank Silos 2			
CD20.06	East Bank Silos 3 D\C	EP20.06	East Bank Silos 3			
CD48.01	Packhouse D\C	EP48.01	Packhouse			
CD23.01	N.E. PACKER D/C	EP23.01	Packer #1 N.E.			
CD22.05	West Bank Silo #70/71 D\C	EP22.05	West Bank Silos #70/#71			
CD22.06	West Bank Silo #72 D\C	EP22.06	West Bank Silos #72			
CD22.07	West Bank Silo #84 D\C	EP22.07	West Bank Silos #84			
CD22.08	West Bank Silo Loadout Spout D\C	EP22.08	West Bank Silos Loadout Spout			
CD22.09	Dry Flyash Bin D\C	EP22.09	Dry Flyash Bin			

Name of Observer(s)_____

NOTE: If a source does not operate during a given month, indicate so in the Emissions Observed Column above.

ATTACHMENT L – SITE SPECIFIC MONITORING PLAN

As a replacement for the 45 CSR 10 Monitoring Plan included in the current Title V Operating Permit, the Plant is providing their Site Specific Monitoring Plan, which was required to be developed under 40 CFR 63.1350(p).

PC MACT Site Specific Monitoring Plan

Prepared for:

Essroc Cement Corporation
Martinsburg Plant
1826 South Queen Street
Martinsburg, WV 25401

Prepared by:

Spectrum Environmental Sciences, Inc.
97 Thomas Johnson Drive, Suite 200
Frederick, Maryland 21702

Rev. 0
July 2015
(Effective September 9, 2015)

Table of Contents

1.0 Overview

1.1 Introduction

The United States Environmental Protection Agency (U.S. EPA) on February 12, 2013 promulgated revised Maximum Available Control Technology (MACT) National Emission Standards for Hazardous Air Pollutants (NESHAPs) for the Portland Cement Manufacturing Industry (i.e., the PC MACT Rule). This regulation is found in 40 CFR 63 Subpart LLL. The Martinsburg Plant (Plant) is a Portland cement plant as defined in 40 CFR 63.1341, and is therefore subject to the PC MACT Rule. 40 CFR 63.1350(p) requires the development of a PC MACT Site Specific Monitoring Plan (Plan) if a Portland cement plant demonstrates compliance with any PC MACT emission limits through performance evaluations (i.e., testing) or emissions monitoring. This Plan also includes the Plant Opacity Monitoring Plan which is presented in Attachment A.

1.2 Definition of a Continuous Monitoring System

40 CFR 63.1350(p)(1) through (4) references a Continuous Monitoring System (CMS). As defined by 40 CFR 63.2, a CMS is "*a comprehensive term that may include, but is not limited to, continuous emission monitoring systems, continuous opacity monitoring systems, continuous parameter monitoring systems, or other manual or automatic monitoring that is used for demonstrating compliance with an applicable regulation on a continuous basis as defined by the regulation*."

1.3 Regulatory Requirements for a PC MACT Site Specific Monitoring Plan

A summary of the regulatory requirements specified in 40 CFR 63.1350(p)(1) through (4) are as follows.

(p) Develop and submit, upon request, monitoring plans.

If the Plant demonstrates compliance with any applicable emissions limit through performance stack testing or other emissions monitoring, the Plant needs to develop a site-specific monitoring plan according to the requirements specified in 40 CFR 63.1350 (p)(1) through 40 CFR 63.1350 (p)(4). This requirement would also apply if the Plant petitions the EPA for allowing use of alternative monitoring parameters provided in 40 CFR 63.1350(o) and 40 CFR 63.8(f). Also, if the Plant uses or plans to use a Bag Leak Detection System (BLDS), the Plant needs to meet the requirements specified in 40 CFR 63 1350(p)(5).

(1) For each CMS required, the Plant needs to develop, and submit to the West Virginia Department of Environmental Protection (WV DEP) for approval if requested by WV DEP, a Plan that addresses paragraphs 40 CFR 63.1350(p)(1)(i) through 40 CFR 63.1350(p)(1)(iii). The Plant needs to submit the Plan, if requested by WV DEP, at least 30 days before the conduct of the initial performance evaluation of each Plant CMS.

(i) Install each CMS sampling probe or other interface at a measurement location relative to each affected process unit so that that the measurement is representative of the control of the exhaust emissions (e.g., on or downstream of the last control device),

(ii) Develop and maintain performance and equipment specifications for all sample interfaces, the pollutant concentrations or parametric signal analyzers, and the data collection and reduction systems, and

(iii) Perform evaluation procedures and acceptance criteria (e.g., RATA's, calibrations, etc).

(2) In the Plan, the Plant needs to also address 40 CFR 63.1350 (p)(2)(i) through 40 CFR 63.1350 (p)(2)(iii) and provide the following:

(i) Ongoing operation and maintenance procedures in accordance with the general requirements of 40 CFR 63.8(c)(1), (c)(3), and 40 CFR 68(c)(4)(ii),

(ii) Ongoing data quality assurance procedures in accordance with the general requirements of 40 CFR 63.8(d), and

(iii) Ongoing recordkeeping and reporting procedures in accordance with the general requirements of 40 CFR 63.10(c), (e)(1), and 40 CFR 63(e)(2)(i).

(3) The Plant needs to conduct a performance evaluation of each CMS in accordance with the Plan.

(4) The Plant needs to operate and maintain the CMS in continuous operation according to the Plan.

1.4 PC MACT Required CMS's Being Operated at the Plant

The Plant operates the following PC MACT required CMS's as provided below. Also included are the PC MACT regulatory monitoring requirements as noted in the parenthesis.

- Total Hydrocarbon (THC) Continuous Emissions Monitoring System (CEMS) located on the Main Stack *(40 CFR 63.1350(i))*,

- Mercury (Hg) CEMS located on the Main Stack *(40 CFR 63.1350(k))*,

- Hydrogen Chloride (HCl) CEMS located on the Main Stack *(40 CFR 63.1350(l))*,

- Particulate Matter (PM) Continuous Parametric Monitoring System (CPMS) located on the Main Stack *(40 CFR 63.1350(b))*,

- Dioxin/Furan (D/F) CPMS (i.e., inlet baghouse temperature) located at the inlet to the Kiln and Alkali Removal System (ARS) Baghouses *(40 CFR 63.1350(g))*,

- Hourly clinker production monitoring for the PH/PC Kiln System *(40 CFR 63.1350(d))*,

- Opacity monitoring using Method 22/Method 9 at all applicable PC MACT affected sources except for Finish Mill #1 and Finish Mill #2 which use a Continuous Opacity Monitoring System (COMS) to measure opacity *(40 CFR 63.1350(f))*,

- Continuous flowrate monitor located on the Main Stack *(40 CFR 63.1350(n))*,

- O_2 monitor located on the Main Stack *(40 CFR 63.1343)*, and

- Site-specific moisture monitoring per EPA Test Method 4 or moisture monitor located on the Main Stack *(40 CFR 63.1343)*.

2.0 CMS Installation, Performance and Equipment Specifications, and Data Collection and Reduction (40 CFR 1350(p)(1)(i) and (ii) and (p)(2)(ii))

2.1 CMS Installation (40 CFR 1350(p)(1)(i))

Continuous monitoring using the CMS sampling probes is performed by the Plant at locations which are representative of the control of the exhaust emissions for those air pollutants regulated by PC MACT. Specifically, this continuous monitoring includes installation and operation at the Plant of HCl, THC, and Hg CEMS (i.e., CMS sampling probes), which are located on the Plant's Main Stack. The continuous monitoring data from the HCl and Hg CEMS is used for demonstrating compliance with the PC MACT HCl and Hg kiln emission limits. The continuous monitoring data from the THC CEMS is used parametrically for demonstrating compliance with the PC MACT Organic HAP (O-HAP) kiln emission limit.

In addition, particulate matter (PM) and dioxin furan (D/F) CPMS are operated by the Plant to demonstrate compliance parametrically with the applicable PC MACT PM and D/F existing kiln emission limits. For the PM CPMS, filterable PM is parametrically monitored by a PM CPMS located on the Main Stack. The analog or digital output signal from the PM CPMS is correlated annually to corresponding Method 5 filterable PM stack test data to establish a parametric PM emission limit for the PH/PC Kiln system. For the D/F CPMS, a temperature probe is installed and operated at the inlet to the Kiln and ARS Baghouses to parametrically monitor the baghouse inlet temperatures. The Kiln and ARS Baghouse inlet temperatures are correlated to corresponding D/F stack test data to parametrically represent D/F emissions for demonstrating compliance with the PC MACT D/F kiln emission limit. The Main Stack volumetric stack flowrate is continuously monitored and the volumetric stack flowrate data is used in conjunction with the Hg CEMS concentration data and the measured hourly Plant clinker production data from the PH/PC Kiln system to determine the PH/PC Kiln system Hg emission rate which is expressed as pounds/million (MM) tons clinker.

Manual monitoring (i.e., Method 22 and Method 9) is used to demonstrate compliance with the opacity limit for all applicable PC MACT affected sources, except for Finish Mill #1 and Finish Mill #2, so no installation is required. For Finish Mill #1 and Finish Mill #2, COMS are installed on each finish mill stack to measure opacity.

For determining hourly clinker production from the PH/PC Kiln system, the Plant has installed, calibrated, maintains, and operates a permanent weigh scale system to measure and record weight rates in tons-mass per hour of the amount of kiln feed provided to the PH/PC Kiln system. The system of measuring kiln feed to the PH/PC Kiln system is maintained within ± 5 percent accuracy and is checked quarterly. To implement this clinker production monitoring, the Plant has developed a procedure which specifies how the hourly clinker production rate from the PH/PC Kiln system is calculated.

Percent Oxygen (O_2) is continuously monitored from an O_2 sensor located on the Main Stack. The percent O_2 data is used in determining the THC and HCl emission rates since these emission

rates need to be corrected to 7 percent oxygen per the requirements specified in 40 CFR 63.1343(a). D/F emissions testing is conducted periodically per 40 CFR 63.1349(c) and the results are also corrected for 7% O_2.

The moisture content contained in the Main Stack is determined by measuring moisture using a ABB ACT-NT rack mounted FTIR analyzer located on the Main Stack, or alternatively, by using site specific stack moisture content data taken from past Plant stack tests which utilized U. S. EPA Test Method 4, "Determination of Moisture Content in Stack Gases" (40 CFR 60 Appendix A-3) per the requirements specified in 40 CFR 63.1343(a).

2.2 CMS Performance and Equipment Specifications (40 CFR 1350(p)(1)(ii))

The Plant utilizes the CMS's described in Section 2.1 to meet PC MACT continuous monitoring requirements. Specific information regarding the THC, Hg, HCl, PM, D/F, O_2, Moisture, Opacity (COMS), and flowrate CMS's associated with each CMS performance and equipment specification is provided in the THC, Hg, and HCl CEMS PC MACT QA/QC Plans, PC MACT PM CPMS QA/QC Plan, COMS QA/QC Plan, and in vendor supplied equipment information for the other cited PC MACT regulated pollutants and parameters. Manual monitoring (i.e., Method 22 and Method 9) is used to demonstrate compliance with the opacity limit for all applicable PC MACT affected sources, except for Finish Mill #1 and Finish Mill #2 which use COMS to monitor opacity; performance and equipment specifications are not applicable for manual monitoring.

2.3 CMS Data Collection and Reduction (40 CFR 1350(p)(2)(ii))

2.3.1 Programmable Logic Controller (PLC) and Data Acquisition and Handling System (DAHS)

The Plant utilizes a state-of-the-art Programmable Logic Controller (PLC). The PLC is an industrial computer control system that continuously monitors the state of input devices and makes decisions based upon a custom program to control the state of output devices. The PLC serves as the gateway for communications between the CEMS, CPMS, COMS, other analyzers (O_2 and flowrate), and the Data Acquisition and Handling System (DAHS) and is located on a Plant dedicated personal computer (PC). Specifically, the PLC provides control and monitoring of digital and analog input and output signals to and from the CEMS, CPMS, and COMS systems.

For calculating hourly clinker production, the PLC receives electrical signals (e.g., milliamps) from the kiln feed weigh scale system. The PLC is programmed to only utilize an electrical signal which corresponds to a kiln feed rate which is greater than or equal to 10 tons/hour. This prevents the PLC from using an electrical signal representing "electronic noise" as a valid data during those times when there is no kiln feed going across the weigh scale.

2.3.2 VIM Technologies, Inc. CEMLink 6

The DAHS software used at the Plant is the VIM Technologies, Inc. CEMLink 6. This software provides the following functions:

- **CEMS System Control:**
  - Calibrations auto/manual/corrections
  - Probe purging/back flush
  - Determine/establish alarm limits
  - Initiate maintenance operations

- **DCS and Process Critical Data:**
  - Gateway between DAHS PC and Plant Information
  - Logs data during DAHS PC downtimes
  - Computes values based on plant inputs and outputs them as required

- **Data Availability:**
  - Processes 1-minute analyzer data
  - Up to 7-days of raw data storage
  - Automatic upload of stored data following periods of DAHS PC non-availability
  - Computes emission rates based on CEMS input/output (I/O)

- **Operator Interfaces/Touch Screen Panels:**
  - Monitor real time values
  - Acknowledge alarms
  - Initiate calibrations
  - Initiate calibration gas audit (CGA) and analyzer maintenance modes

The CEMLink 6 Data Supervisor is a database program that organizes reports and stores the CEMS, CPMS, and COMS data. All system information including analyzer readings, corrected averages, limited parameters, monitoring codes, process codes, calibration data, regulatory data, alarms and events are logged in the Data Supervisor. Reports can be viewed on the screen, sent to any network or dedicated printer, exported to another application for customization or rolled up into a PDF format. Available reports include:

- Monthly Hourly Averages
- Monthly 24-Hour Averages
- Monthly Calibration Logs
- 40 CFR 60.7 Summary Reports
- 12-Month Rolling Report
- CEMS Downtime Report
- Excess Emissions Report
- Process Status Report (monthly, quarterly, or bi-annually)
- 40 CFR 60 Edit Log (monthly, quarterly, or bi-annually)

For compliance reporting calculations, CEMLink 6 processes 1-minute average emission data as measured by the CEMS into 1-hour average emission data. The 1-hour average emission data are then used to calculate a 30-day rolling average emission rate. For Hg, CEMLink 6 will also use hourly clinker production data to calculate the 30-day Hg emission rates in the units of Lbs Hg/MM tons clinker.

2.3.3 Manual Opacity Monitoring

Results of manual opacity monitoring will be recorded on paper forms or will be recorded using electronic devices and stored on electronic media. Records will be maintained in the Plant Environmental Manager's office.

3.0 Ongoing Operation and Maintenance Plans and Procedures (40 CFR 63.1350(p)(2)(i))

3.1 General

The Plant has developed and maintains a number of specific operation and maintenance plans and procedures related to site-specific monitoring that is being conducted in order to meet the applicable PC MACT requirements. These operation and maintenance plans and procedures are referenced throughout this Plan. Provided below is a listing and overview of each operation and maintenance plan and procedure. Additional details can be found in each specific operation and maintenance plan and procedure which is maintained by the Plant.

3.2 CEMS QA/QC Plans

- **Hg CEMS QA/QC Plan**

The Plant uses a Tekran Hg CEMS, consisting of a 2537A Hg Mercury Analyzer, 3310 Hg Calibrator, 3315 Hg Ionic Calibrator, 3320 Sample Conditioner, 3340 Dilution Probe Controller, 3342 Non-Inertial Probe, and a 3305 CEMS controller located on the Main Stack. The Tekran Hg CEMS is an extractive sampling unit that measures Hg by cold vapor atomic fluorescence detection. The Tekran Hg CEMS also utilizes a pure gold cartridge which is immune to memory effects and will not degrade over time. The Tekran Hg CEMS in compliance with 40 CFR 63.1350(k) requirements and the Hg CEMS data is used to demonstrate compliance with the PC MACT Hg emission limit of 55 pounds/MM tons clinker (40 CFR 63.1343(b), Table 1).

The PC MACT Hg CEMS QA/QC Plan describes in detail the Tekran Hg CEMS which serves as the basis for assessing and maintaining the quality of continuous Hg emission monitoring data. The objective of the PC MACT Hg CEMS QA/QC Plan is to provide documentation for the collection of Hg emission data of known and acceptable quality, and in sufficient quantity, in order to demonstrate compliance with the PC MACT monitoring requirements applicable to the Plant.

The PC MACT Hg CEMS QA/QC Plan also address other necessary support services and activities, such as manual methods source testing, data reduction, spare parts inventory control, and report preparation and submittal; all of which are required in order to maintain data quality.

- **HCl CEMS QA/QC Plan**

The Plant uses an ABB ACF5000 multi-component Fourier Transfer Infrared (FTIR) analyzer located on the Main Stack for the measurement of HCl. The ABB ACF5000 multi-component FTIR is based on the principle of using FTIR spectroscopy which absorbs HCl in the infrared region to determine HCl emissions. The ABB ACF5000 multi-component FTIR HCl CEMS is in compliance with 40 CFR 63.1350(l) requirements and the HCl CEMS data is used to

demonstrate compliance with the PC MACT HCl emission limit of 3.0 ppmvd (40 CFR 63.1343(b), Table 1).

The PC MACT HCl CEMS QA/QC Plan describes in detail the ABB ACF5000 multi-component FTIR which serves as the basis for assessing and maintaining the quality of continuous HCl emission monitoring data. The objective of the PC MACT HCl CEMS QA/QC Plan is to provide documentation for the collection of HCl emission data of known and acceptable quality and in sufficient quantity in order to demonstrate compliance with the air pollution emission and air monitoring regulations applicable to the Plant.

The PC MACT HCl CEMS QA/QC Plan also address other necessary support services and activities, such as manual methods source testing, data reduction, spare parts inventory control, and report preparation and submittal; all of which are required in order to maintain data quality.

- **THC CEMS QA/QC Plan**

The Plant uses an ABB Multi- flame ionization detector (FID) 14 analyzer which uses a FID for the measurement of THC and is located on the Main Stack. The PC MACT THC CEMS QA/QC Plan describes in detail this analyzer which serves as the basis for assessing and maintaining the quality of continuous THC emission monitoring data. The THC CEMS is in compliance with 40 CFR 63.1350(j) requirements and the THC CEMS data from the Main Stack is used to parametrically demonstrate compliance with the PC MACT Total Organic HAP limit of 12 ppmvd (40 CFR 63.1343(b), Table 1, Footnote 4).

The objective of the PC MACT THC CEMS QA/QC Plan is to provide documentation for the collection of THC emission data of known and acceptable quality and in sufficient quantity in order to parametrically demonstrate compliance with the PC MACT monitoring requirements applicable to the Plant.

The PC MACT THC CEMS QA/QC Plan also address other necessary support services and activities, such as manual methods source testing, data reduction, spare parts inventory control, and report preparation and submittal; all of which are required in order to maintain data quality.

- **PM CPMS QA/QC Plan**

The Plant uses a SICK DUSTHUNTER SP100 analyzer for the parametric measurement of particulate matter (PM) located on the Main Stack. The SICK DUSTHUNTER SP100 PM analyzer is a certified scattered light dust monitor for detecting low to medium concentrations of dust contained in dry flue gas and process gas. The SICK DUSTHUNTER SP100 CPMS is in compliance with 40 CFR 63.1350(b) requirements and the parametric PM CPMS data (i.e., analog or digital output signal) is used to demonstrate compliance with the parametric PC MACT PM emission limit established by the Plant which cannot be exceeded more than four times in a calendar year (40 CFR 63.1350(b)(iv)).

The PC MACT PM CPMS QA/QC Plan describes in detail this analyzer which serves as the basis for assessing and maintaining the quality of continuous parametric PM emission monitoring data. The objective of the PC MACT PM CPMS QA/QC Plan is to provide

documentation for the collection of PM emission data of known and acceptable quality and in sufficient quantity in order to demonstrate compliance with the PC MACT monitoring requirements applicable to the Plant.

The PC MACT PM CPMS QA/QC Plan also address other necessary support services and activities, such as manual methods source testing, data reduction, spare parts inventory control, and report preparation and submittal; all of which are required in order to maintain data quality.

- **COMS QA/QC Plan**

The COMS QA/QC Plan describes in detail the COMS analyzers used and presents the U.S. EPA established requirements for quality assurance, quality control, monitoring, record keeping, and reporting opacity levels in flue gases emitted from affected units. The COMS are governed by the regulations established under 40 CFR Part 60, Appendix B, Performance Specification 1 and 40 CFR Part 60 Appendix F, Quality Assurance Procedures, which include general requirements for the installation, certification, operation, and maintenance of the COMS.

- **Plant Operations and Maintenance (O&M) Plan**

Per the PC MACT Rule (40 CFR 63 Subpart LLL), the Plant is required to have established procedures for the proper operation and maintenance of all PC MACT Rule affected sources and air pollution control devices in order to meet PC MACT emissions limits and operating limits, including any applicable fugitive dust control measures for any open clinker piles located at the Plant per 40 CFR 63.1342 through 40 CFR 63.1348.

The O&M Plan is also required to address periods of Plant startup and shutdown. The O&M Plan satisfies the requirements of 40 CFR 63.1347(a).

- **Plant Opacity Monitoring Plan**

Per the PC MACT Rule, specifically 40 CFR 63.1350(f), the Plant is required to develop an Opacity Monitoring Plan in accordance with 40 CFR 63.1350(p)(1) through (4) and 40 CFR 63.1350(f)(1)(i) through (vii). The Plant Opacity Monitoring Plan is provided as Attachment A to this Plan and describes in detail the opacity limits, monitoring, recordkeeping, and reporting requirements for all applicable Plant PC MACT affected sources subject to an opacity limit.

3.3 Monitoring Procedures

- **Plant Procedure for Monitoring Using a Weigh Scale System**

This Plant procedure addresses 40 CFR 63.1350(d) requirements where the Plant is required to have installed, calibrated, maintain, and operate a permanent weigh scale system to measure and record weight rates in tons-mass per hour of the amount of kiln feed which is used to estimate the amount of clinker produced by the PH/PC Kiln system. The system of measuring clinker is required to be maintained within ±5 percent accuracy.

The hourly clinker production rate is calculated using a kiln-specific feed to clinker ratio based on reconciled clinker production determined by the Plant for accounting purposes and using recorded kiln feed rates. This ratio is updated monthly. If this ratio changes at the time of clinker reconciliation, the Plant will use the new ratio going forward, but it will not be used retroactively to change the clinker production rates previously estimated.

- **Plant Procedure for Monitoring Kiln Stack Volumetric Flowrate**

The Plant operates an ABB ACT-NT rack mount FTIR analyzer located on the Main Stack. This Plant procedure addresses 40 CFR 63.1350(n) requirements where the Plant is required to install, operate, calibrate, and maintain instruments, according to the requirements in paragraphs 40 CFR 63.1350(n)(1) through 40 CFR 63.1350(n)(10), to continuously measure and record the stack gas volumetric flow rate. The stack gas volumetric flow rate data is used in conjunction with the Hg CEMS data to determine the Hg mass emissions rate in a unit of pounds per million tons of clinker and used to demonstrate compliance with the PC MACT PH/PC Kiln Hg emission limit.

- **Plant Procedure for Kiln Stack O_2 Monitoring**

The Plant operates a Servomex Model Pm1158 O_2 analyzer located on the Main Stack. The O_2 monitoring data is used to correct the THC and HCl CEM emission data to 7 percent oxygen. D/F emissions testing is conducted periodically per 40 CFR 63.1349(c) and the results are also corrected for 7% O_2. This Plant procedure addresses 40 CFR 63.1343(a) requirements.

- **Plant Procedure for Kiln Stack Moisture Monitoring**

The moisture content contained in the Main Stack is determined by measuring moisture using a ABB ACT-NT rack mounted FTIR analyzer located on the Main Stack, or alternatively, by using site specific stack moisture content data taken from past Plant stack tests which utilized U. S. EPA Test Method 4, "Determination of Moisture Content in Stack Gases" (40 CFR 60 Appendix A-3). Appropriate moisture corrections need to be made per 40 CFR 63.1343(a) when measuring a dry volumetric flow rate that is used when calculating the Hg emission rate.

- **Plant Procedure for Monitoring Kiln and ARS Baghouse Inlet Temperatures for D/F Parametric Monitoring**

This Plant procedure addresses 40 CFR 63.1350(g) requirements where the Plant is required to install, calibrate, maintain, and continuously operate a CMS to record the temperature of the exhaust gases at the inlet to the Kiln and ARS Baghouses. The inlet temperature data is used to parametrically demonstrate compliance with the D/F emission limit of 0.2 or 0.4 ng/dscfm (TEQ), depending if the inlet temperature measured during the most recent D/F performance tests are greater than 400 °F or less than 400 °F, respectively. Also, during periods of startup and shutdown the temperature limit may only be exceeded by no more than 10 percent per 40 CFR 63.1346. Thermocouples are used which have been calibrated to NIST standards and are changed by the Plant quarterly.

- **Standard Operating Procedure for Kilns and Clinker Coolers During Plant Startup and Shutdown**

Plant Standard Operating Procedures (SOPs) for startup and shutdown are utilized for both the PH/PC Kiln and Clinker Cooler. The Plant O&M Plan provides details of these procedures.

The PC MACT regulations governing startup and shutdown for existing kilns and clinker coolers are provided in 40 CFR 63.1346(g) and 40 CFR 63.1348(b)(9), respectively, and stipulate the "Work Practices" to be followed per 40 CFR 63.1343(a) for an existing kiln and existing clinker cooler located at an existing major source. Work practices for startup of an existing kiln mean the time from when a shutdown kiln first begins firing fuel until the kiln begins producing clinker. Further, startup begins when a shutdown kiln turns on the induced draft fan and begins firing fuel in the main burner. Startup ends when feed is being continuously introduced into the kiln for at least 120 minutes or when the feed rate exceeds 60 percent of the kiln design limitation rate, whichever occurs first. Shutdown means the cessation of kiln operation. Shutdown begins when feed to the kiln is halted and ends when continuous kiln rotation ceases.

As described in 40 CFR 63.1346(a)(1) and (2), the Plant is required to monitor and record the Kiln and ARS Baghouses inlet temperature during periods of startup/shutdown where the inlet temperature limit may be exceeded by no more than 10 percent. The Plant will preheat the PH/PC Kiln with "clean fuels" until the temperature reaches 1,200°F. During periods of startup and shutdown the Plant will use Best Management Practices (BMPs) to minimize emissions. All air pollution control devices must be turned on and operating prior to combusting any fuel.

For the Clinker Cooler, the work practice standards cited in 40 CFR 63.1343(a) are provided in 40 CFR 63.1348(b)(9) where the Plant is required that all APCD's must be in operation during periods of Plant startup and shutdown.

4.0 Quality Control (QC) Activities (40 CFR 1350(p)(1)(iii) and(p)(4))

4.1 General

Quality Control (QC) is defined as the procedures, policies, and corrective actions necessary to ensure product quality. QC procedures are typically "routine activities". These routine activities include, but are not limited to, daily calibration checks, systems inspections, and routine preventative maintenance. The QC activities performed at the Plant are designed to ensure that monitoring and maintenance operations are conducted adequately and appropriately. Besides routine activities, QC activities can also range from performing CMS system installation to developing and implementing data handling/reporting procedures. QC activities are performed by the applicable Plant Departments.

Initial installation of any CMS will be carried out by the Plant in strict accordance with the procedures established by the CMS vendor and any attending regulatory requirements including the applicable EPA Performance Specifications (PS) and/or factory acceptance testing requirements. These QC procedures also include initial start-up, debugging, and inspection of the CMS to ensure proper operation.

A complete set of Operational and Maintenance (O&M) manuals for all components of the CMS's used at the Plant are maintained by the appropriately designated Plant personnel. These O&M manuals provide complete descriptions of the CMS's including theory, installation, operation, trouble shooting, repair, and general maintenance.

Further details regarding additional QC activities including data handling, compliance levels, calibrations, zero and spans checks, loss of CMS data, spare parts, and other relevant topics related to QC activities associated with the CMS's are discussed in the applicable PC MACT CEMS, CPMS, and COMS QA/QC Plans. Additionally, the Plant's O&M Plan provides further relevant discussion of opacity monitoring, open clinker storage piles, O&M procedures, recordkeeping, and reporting requirements stipulated by the PC MACT Rule.

It is important to note that QC activities differ from Quality Assurance (QA) activities. QA is defined as the series of checks performed to ensure the QC procedures are functioning properly. QA activities include, but are not limited to, calibration gas audits, performing Relative Accuracy Test Audits (RATAs), and EPA PS testing which are discussed in further detail in Section 5.0 of this Plan.

4.2 Routine Performance Evaluations ((40 CFR 1350(p)(1)(iii))

4.2.1 Daily Calibration Checks

Each CEMS, CPMS, and COMS is automatically challenged to a known standard once every 24 hours. The DAHS calculates the percent difference from entered known values. The Plant

Instrumentation Supervisor or designee is responsible for verifying monitor response with the applicable PS specified in 40 CFR Part 60 Appendix F, at a minimum.

Recalibration of the CEMS, CPMS, and COMS will be performed if drift is indicated. Further details regarding QC procedures and acceptance criteria for the PM, Hg, THC, and HCl CEMS are provided in their respective PC MACT CEMS, PC MACT COMS, and PC MACT CPMS QA/QC Plans. Also, the Plant has established separate QC procedures applicable to the Kiln and ARS Baghouse inlet temperature monitors, the Main Stack volumetric flowrate monitor, O_2 monitor, and the permanent weigh scale system.

4.2.2 Systems Checks

System checks for each CMS analyzer consists of performing a zero drift check and a span drift check. Where applicable, system checks also include checking the calibration gas pressure, the compressed air supply, sample gas flow rates, and performing weekly, monthly, and bi-annual maintenance on each CMS analyzer. Also, where applicable, the system check includes performing a quarterly calibration gas audits for all CMS's and performing a monthly inspection of the permanent weigh scale system.

4.2.3 Routine Preventative Maintenance

Routine preventive maintenance is a regularly scheduled set of activities designed to prevent problems before they occur. Routine maintenance is performed on all the CMS systems, including the CEMS, CPMS, and COMS utilizing procedures provided in their respective PC MACT Hg, HCl, and THC CEMS QA/QC Plans, PM CPMS QA/QC Plan, COMS QA/QC Plan, and the Plant O&M Manual. Additional information on operations and maintenance plans and procedures is provided in Section 3.0 of this Plan.

5.0 Quality Assurance Activities (40 CFR 63.1350(p)(2)(ii))

5.1 Ongoing QA Activities

The Plant performs ongoing quality assurance (QA) activities per 40 CFR 60 Appendices A, B, and F to assess the accuracy of the CEMS, CPMS, and COMS which are used to demonstrate compliance with PC MACT standards (i.e., emission limits). Verification of the operational status includes completion of the manufacturer's written specifications or recommendations for installation, operation, and calibration of the monitoring systems. Further details on QA activities associated with the CEMS, CPMS, and COMS can be found in the PC MACT Hg, HCl, and THC CEMS QA/QC Plans, PM CPMS QA/QC Plan, and COMS QA/QC Plan which are kept on file at the Plant.

5.2 Quality Assurance Procedures

The purpose of QA procedures is to ensure that the CEMS, COMS, and the CPMS provide accurate and reliable data. These procedures compare the pollutant/diluent values obtained from the CEMS to values obtained by the EPA Reference Method or an approved alternative testing method. The results of these tests provide verification of the continued comparability of the CEMS data to data collected by and compared to outside references. The procedures for these tests are published in EPA 40 CFR Part 60, Appendices A, B, and F. For the COMS and PM CPMS procedures are published in 40 CFR 60, Appendix B, Performance Specification 1, 40 CFR 60, Appendix F; Quality Assurance Procedures.

Per 40 CFR 1350(d)(2), each quarter the Plant will determine, record, and maintain a record of the ongoing accuracy of the permanent weigh scale system for measuring hourly feed mass flow for the PH/PC Kiln. The Plant maintains a copy of this procedure at the Plant.

5.3 Relative Accuracy Test Audit (RATA)

A Relative Accuracy Test Audit (RATA) as described in EPA's, 40 CFR 60 Appendix B is a test designed to assess the accuracy of the applicable CMS monitors relative to the appropriate EPA reference method tests. The RATA for the applicable CMS's is conducted in accordance with the applicable U.S. EPA Test Methods and U.S. EPA Performance Specifications. Further details regarding QA procedures for COMS, PM CPMS and the Hg, THC, and HCl CEMS are provided in the PM CPMS QA/QC Plan, COMS QA/QC Plan, and the Hg, THC, and HCl CEMS QA/QC Plans.

The Plant is responsible for hiring the RATA contractor and providing appropriate notification to the state. Additionally, designated Plant personnel will oversee the performance of the RATA and assemble and provide the required CMS data during the conduct of the RATA. The contractor is responsible for preparing the RATA report and using applicable Plant emission data and information which will be provided by the Plant. All RATA data and records will be kept by the Plant.

5.3.1 RATA Testing Prerequisites

Prior to the actual RATA testing procedures, several testing prerequisites will be performed. Testing prerequisites include but are not limited to the following:

- Verify the availability of all personnel required to perform testing,
- Verify that all schedule maintenance of the CMS has been performed,
- Verify that the test location conditions are adequate for testing, and that necessary support services are available,
- Review the applicable Reference Methods contained in 40 CFR Part 60 Appendices. Also review applicable Performance Specifications contained in 40 CFR Part 60, Appendix B and relevant and applicable Methods, and
- Submit RATA Notification. Per 40 CFR 63.9(g)(1) a notification of the date for any scheduled performance evaluation must be submitted to the state in writing at least 60 calendar days prior to when the performance evaluation is scheduled to begin. Per 40 CFR 63.2 *Performance evaluation* means the conduct of relative accuracy testing, calibration error testing, and other measurements used in validating the continuous monitoring system data.

5.3.2 RATA Testing Procedures

The following procedures will be conducted before, during, and after RATA testing.

- Verify that the CMS operating conditions are "in control" by conducting a systems audit.
- Notify applicable Plant personnel and the RATA contractor of the testing schedule and request notification form the Plant Control Room if any condition arises that would result in less than a 50 percent stable load during the RATA.
- Obtain copies of CMS reports covering the test period.
- Perform the post-test calibration and document the results of the calibration.

5.3.3 RATA Data Reduction and Analysis

The results of the manual Reference Method (RM) tests, as part of the RATA, are calculated according to procedures included in EPA's 40 CFR Part 60, Appendix A.

5.4 Relative Accuracy Calculations

The calculation procedure for relative accuracy as described in EPA's, 40 CFR 60, Appendix B is a test designed to assess the accuracy of the applicable CMS monitors relative to the

appropriate EPA RM tests. The RATA calculations for the applicable CMS systems are conducted in accordance with applicable U.S. EPA Test Methods. Further details regarding QA procedures for Hg, THC, and HCl are provided in their respective PC MACT CEMS QA/QC Plan.

A calibration check must be conducted at least daily for determination of zero and upscale calibration drift. Each day, the COMS and PM CPMS status indicators and final recording device must be checked for faults and/or alarms associated with the COMS and PM CPMS. A calibration error test shall be performed on each COMS and PM CPMS at least once every calendar quarter using neutral density audit filters. . Further details regarding QA procedures for are provided in their respective PC MACT COMS and PM CPMS QA/QC Plan.

5.5 Calibration Gas Audit

A calibration gas audit (CGA) is performed quarterly for each CEMS monitor for each quarter in which a RATA is not conducted. Refer to Section 5.2.1 of the respective PC MACT CEMS QA/QC Plans for a discussion of CGA procedures. The CGA is performed in accordance with the requirements specified in Appendix F to 40 CFR Part 60. For additional information on use of CGA's as part of applicable CEM RATA procedures refer to the applicable EPA Test Methods. Designated Plant personnel perform the CGA.

The CGA results are maintained on file by the Plant. The audit calibration gases are introduced at the CEM probe's injection port. The CEMS is challenged at two calibration levels (low-, and mid-). The two calibration gas levels are defined by 40 CFR Part 60 as: (1) low-level concentration is 20 to 30% of span and (2) mid-level concentration is 50 to 60% of span.

6.0 Performance Evaluations (40 CFR 63.1350(p)(3))

6.1 General

Performance evaluations (i.e., performance tests) will be performed in accordance with applicable EPA 40 CFR 60 Appendix B requirements. The required PC MACT performance testing requirements are specified in 40 CFR 63.1349.

The required applicable Appendix B Reference Method testing will be conducted by a competent and professional testing contractor hired by the Plant, and performed in accordance with approved EPA procedures. If the performance evaluation does not produce acceptable results, corrective actions will be taken and the performance evaluation will need to be again performed. Full documentation of all corrective actions performed is required. Further details regarding the conduct and content of performance evaluations (i.e., systems appraisals) for each CMS are provided in the respective CEMS QA/QC Plans, PM CPMS QA/QC Plan, and COMS QA/QC Plan.

6.2 Report Emission Test Requirements

40 CFR 63.1349(b) specifies emission test requirements for PM (b)(1), Opacity (b)(2), D/F (b)(3), THC (b)(4), Hg (b)(5), HCl (b)(6), Total Organic HAPs (b)(7), and HCl with SO_2 Monitoring (b)(8). Applicable 40 CFR 63.1349(b) emission test requirements will be reported by the Plant.

6.3 Performance Test Notification and Reporting

As described in 40 CFR 63.7(c)(2)(i), the Plant will need to make available to the applicable regulatory authority prior to conducting the performance test, if requested, a specific performance test plan (i.e., Testing Protocol) which needs to be followed during the conduct of the performance testing. Per 40 CFR 63.1349(e), the Plant must notify the WV DEP in writing of its intent to conduct a performance test at least 60 calendar days before it is scheduled to begin.

The Plant is required to document performance test results in a complete test report that contains the information required by paragraphs (a)(1) through (a)(10) of 40 CFR 63.1349, as well as all other relevant information. See Sections 8.2 and 8.3 of this Plan for specific requirements and the content of the Performance Test Report.

The Performance Test Report will need to be submitted no later than 60 days following the conduct of the performance test and signed by a responsible company official.

6.4 Performance Test Frequency

Performance tests are required to be performed every 30 months for affected sources that are subject to a D/F, Organic HAP (in lieu of a THC limit), or HCl (only if you use a wet or dry

scrubber or tray tower) emissions limit. A performance test for all PC MACT affected sources subject of a PM emission limit is required to be repeated every 12 months.

Performance tests for THC, Hg, and HCl (only if you are not using a wet or dry scrubber or tray tower) where these three pollutants are monitored using a CEMS, have to be conducted only during the initial performance test.

6.5 Conditions of Performance Tests

Conduct performance tests under such conditions as specified in the PC MACT Rule. Upon request, the Plant will need to make available to the WV DEP any records that may be necessary to determine the Plant conditions at the time of the conduct of any performance test.

7.0 Recordkeeping and Reporting (40 CFR 63.1350(p)(2)(iii))

7.1 General

As described in the Plant O&M Plan, appropriate documentation of the operating, maintenance, monitoring, and inspection activities conducted pursuant to the O&M Plan will be maintained on file at the Plant in accordance with applicable PC MACT requirements. Also, ongoing recordkeeping and reporting will be performed in accordance with the general requirements of 40 CFR 63.10(c), (e)(1), and (e)(2)(i).

The Plant will record all relevant files in a form suitable and readily available for inspection and review as required by 40 CFR 63.10(b)(1). The files will be retained by the Plant for a period of least five years following the date of each occurrence, maintenance, corrective action, report, or record. At a minimum, the most recent two years of data will be retained at the Plant. The remaining three years of data may be retained by the Plant at an offsite location.

7.2 Performance Test Report Outline

Per 40 CFR 63.1349(a), after the conduct of a performance test, a Performance Test Report needs to be prepared and specifically address the following, as well as all other relevant information:

(1) A brief description of the process and the air pollution control system;

(2) Sampling location description(s);

(3) A description of sampling and analytical procedures and any modifications to standard procedures;

(4) Test results;

(5) Quality assurance procedures and results;

(6) Records of operating conditions during the performance test, preparation of standards, and calibration procedures;

(7) Raw data sheets for field sampling and field and laboratory analyses;

(8) Documentation of calculations;

(9) All data recorded and used to establish parameters for monitoring; and

(10) Any other information required by the performance test method.

7.3 Performance Test Reporting Requirements

The information specified below will need to be submitted no later than 60 days following the initial performance test and any subsequent performance tests.

- The performance test data as recorded
- The values for the site-specific operating limits or parameters established pursuant to 40 CFR 63.1349(b)(1), (3), (6), and (7), as applicable, and a description, including sample calculations, of how the operating parameters were established during the performance test.

All reports will need to be signed by a responsible company official or their designee.

Within 60 days after the date of completing each performance test, as defined in 40 CFR 63.2, which was conducted to demonstrate compliance with any standard covered by 40 CFR 63.1349, the Plant needs to submit the RATA data and performance test data, except for opacity data, to the EPA by successfully submitting the data electronically to the EPA's Central Data Exchange (CDX) by using the Electronic Reporting Tool (ERT) found at the following EPA website, *http://www.epa.gov/ttn/chief/ert/ert_tool.html/*.

8.0 Operation and Maintenance of the CMS's (40 CFR 1350(p)(4))

All maintenance of the CMS's can be classified into one of two areas:

1. **Routine Preventive Maintenance**: A regularly scheduled set of activities designed to prevent problems before they occur.

2. **Non-Routine Preventive Maintenance:** A set of activities designed to prevent problems, but the need for it cannot be predicted, so it is done on an as-needed basis. Non-routine preventive maintenance is not discussed in the CEMS QA/QC Plans, PM CPMS QA/QC Plan, or the COMS QA/QC Plan because it is neither practical nor necessary to develop written procedures for it.

Routine maintenance is performed on all the CMS systems, including the CEMS, PM CPMS, and COMS, utilizing procedures provided in their respective CEMS QA/QC Plans, PM CPMS QA/QC Plan, COMS QA/QC Plan, and the Plant O&M Plan.

Attachment A: Opacity Monitoring Plan

PC MACT OPACITY MONITORING PLAN

ESSROC MARTINSBURG PLANT

MARTINSBURG, WEST VIRGINIA

Preparation Date:
July 2015

Prepared For:
Essroc Cement Corporation
Martinsburg Plant
1826 South Queen Street
Martinsburg, WV 25401

Prepared By:

Spectrum Environmental Sciences, Inc.
97 Thomas Johnson Drive, Suite 200
Frederick, Maryland 21702

Effective Date:
September 9, 2015

PC MACT Opacity Monitoring Plan
Table of Contents

1.0 Introduction

This PC MACT Opacity Monitoring Plan was developed for the Martinsburg Plant (Plant) to meet PC MACT Rule 40 CFR 63.1350(f) and 40 CFR 63.1350(p) requirements. Specifically, 40 CFR 63.1350(f) requires that a Opacity Monitoring Plan must be developed in accordance with 40 CFR 63.1350(p)(1) through (4) and 40 CFR 63.1350(f)(1)(i) through (vii).

Since kiln systems and clinker coolers no longer have an applicable PC MACT opacity limit beginning on September 9, 2015, the Plant is required to only perform visible emission monitoring (Method 22) and opacity monitoring (Method 9) for all other applicable Plant PC MACT affected sources, as defined in 40 CFR 63.1340(b) to (c), to demonstrate compliance with their PC MACT opacity limits.

Alternatively, the Plant has an option of using a Bag Leak Detection System (BLDS) or a continuous opacity monitoring system (COMS) to demonstrate compliance with each PC MACT affected source's opacity limit. The Plant is using COMS on Finish Mill #1 and Finish Mill #2 to demonstrate compliance with the PC MACT opacity limit.

The PC MACT Opacity Monitoring Plan consists of this Introduction (Section 1.0), PC MACT Regulatory Requirements (2.0), Opacity Limits (3.0), Monitoring Requirements (4.0), Reporting Requirements (5.0), Recordkeeping Requirements (6.0), and a List of PC MACT Affected Sources (Appendix A).

2.0 PC MACT Regulatory Requirements

The following provides a summary of applicable PC MACT opacity regulatory requirements.

- 40 CFR 63.1343(b), Table 1, Item 13, presents the opacity limit which is applicable to the three existing Plant finish mills.

- 40 CFR 63.1345, Emissions Limits for PC MACT Affected Sources Other Than Kilns, Clinker Coolers, and New or Reconstructed Raw Material Dryers, provides the opacity limit which is applicable to Plant PC MACT affected sources other than those listed above. Specifically, the Plant PC MACT affected sources include raw material, clinker, and finished product storage bins; conveying system transfer points; bagging systems; and bulk loading and unloading systems, (herein referenced as "material handling points").

- 40 CFR 63.1348(b)(3), Continuous Monitoring Requirements for Opacity Compliance, requires that the Plant, since it is subject to the opacity limit specified in 40 CFR 63.1345, demonstrate compliance using the monitoring methods and procedures specified in 40 CFR 63.1350(f), which is based on the maximum 6-minute average opacity exhibited during the performance test period. The Plant also is required to initiate corrective actions within 1-hour of detecting a visible emission above the PC MACT affected source's opacity limit.

- 40 CFR 63.1349(b)(2), Initial Opacity Tests, requires the Plant, since the Plant is subject to an opacity limit, to perform an initial opacity test on each PC MACT affected source in accordance with Method 9 of 40 CFR 60 Appendix A-4. The duration of this Method 9 performance test is required to be 3-hours (consisting of 30 6-minute averages), except that the duration of the Method 9 performance test may be reduced to 1-hour if the conditions of 40 CFR 63.1349(b)(2)(i) through (b)(2)(ii) are applicable. Specifically, 40 CFR 63.1349 (b)(2)(i) specifies that there are no individual readings greater than 10 percent opacity and 40 CFR 63.1349 (b)(2)(ii) specifies that there are no more than three readings of 10 percent for the first 1-hour period.

- 40 CFR 63.1349(d) Performance Test Reporting Requirements. The Plant is required to submit the information specified in 40 CFR 63.1349(d) for all performance testing required under 40 CFR 63.1349(b).

- 40 CFR 63.1350(f), Opacity Monitoring Requirements. The Plant, since it is subject to a opacity limit specified in 40 CFR 63.1345, is required to conduct opacity monitoring in accordance with the provisions of paragraphs (f)(1)(i) through (vii) and also be in accordance with this PC MACT Opacity Monitoring Plan which is required to be developed by 40 CFR 63.1350(p). Specifically, the PC MACT Opacity Monitoring Plan is required to be developed in accordance with requirements defined in 40 CFR 63.1350(p)(1) through (4) and (o)(5), if applicable.

- 40 CFR 63.1350(p), Development of Monitoring Plans. 40 CFR 63.1350(p)(1-4) provides guidance for the development of monitoring plans for each continuous monitoring system (CMS). CMS is defined by 40 CFR 63.2 as "a comprehensive term that may include, but is not limited to, continuous emission monitoring systems (CEMS), continuous opacity monitoring systems (COMS), continuous parameter monitoring systems (CPMS), or other manual or automatic monitoring that is used for demonstrating compliance with an applicable regulation on a continuous basis as defined by the regulation." As of September 9, 2015, the Plant only utilizes manual monitoring (i.e., Method 22 and Method 9) to measure visible emissions and opacity from applicable PC MACT affected sources subject to an opacity limit except for Finish Mill #1 and Finish Mill #2 which monitor opacity using COMS.

- 40 CFR 63.1350(p)(1) requires information specific to COMS, CEMS, and CPMS to be included in the monitoring plan, such as installation details, performance and equipment specifications, and calibration procedures. This information is not applicable to the manual monitoring (Method 22/Method 9) conducted by the Plant to measure visible emissions and opacity from applicable PC MACT affected sources but is applicable for the use of COMS to monitor opacity from Finish Mill #1 and Finish Mill #2 and is addressed in the Plant's COMS QA/QC Plan.

- 40 CFR 63.1350(p)(2) requires the monitoring plan to address the following:

  - Ongoing operation and maintenance procedures in accordance with the general requirements of 40 CFR 63.8(c)(1), (c)(3), and (c)(4)(ii). These are addressed in the Plant's Operation and Maintenance Plan.

  - Ongoing data quality assurance procedures in accordance with the general requirements of 40 CFR 63.8(d). This requirement is not applicable to the manual monitoring (Method 22/Method 9) conducted by the Plant to measure visible emissions and opacity from applicable PC MACT affected sources but is applicable for the use of COMS to monitor opacity from Finish Mill #1 and Finish Mill #2 and is addressed in the Plant's COMS QA/QC Plan.

  - Ongoing recordkeeping and reporting procedures in accordance with the general requirements of 40 CFR 63.10(c), (e)(1), and (e)(2)(i). Reporting requirements are provided in Section 5.0 of this Opacity Monitoring Plan. Recordkeeping requirements are provided in Section 6.0 of this Opacity Monitoring Plan.

- 40 CFR 63.1350(p)(3) requires the Plant to conduct a performance evaluation of each CMS. This requirement is not applicable to the manual monitoring (Method 22/Method 9) conducted by the Plant to measure visible emissions and opacity from applicable PC MACT affected sources but is applicable for the Plant's use of COMS on Finish Mill #1 and Finish Mill #2 to monitor opacity and is addressed in the Plant's QA/QC Plan.

- 40 CFR 63.1350(p)(4) requires the Plant to operate and maintain the CMS in continuous operation. This requirement is not applicable to the manual monitoring (Method

22/Method 9) conducted by the Plant to measure visible emissions and opacity for applicable PC MACT affected sources but is applicable for the use of COMS to monitor opacity from Finish Mill #1 and Finish Mill #2.

- 40 CFR 63.1353(b)(3), Notification Requirements**,** requires the Plant to notify the West Virginia Department of Environmental Protection (WV DEP) of any opacity and visible emission observations that will be conducted as required by 40 CFR 63.1349 and be performed in accordance with 40 CFR 63.6(h)(5) and 40 CFR 63.9(f).

- 40 CFR 63.1355 presents details of the PC MACT Rule recordkeeping requirements.

3.0 Opacity Limits

- **Finish Mills**

The three Plant finish mills have a 10 percent opacity limit.

- **PC MACT Affected Sources Which are Material Handling Points**

The PC MACT affected sources which are considered to be Plant material handling points have a 10 percent opacity limit.

4.0 Opacity Monitoring Requirements

4.1 Material Handling Points

The following describes the procedures used to periodically conduct visual emissions monitoring of PC MACT affected sources which are material handling points.

The Plant routinely performs Method 22 and Method 9 tests which meet the PC MACT Rule requirements specified below. Per 40 CFR 63.1350(f) of the PC MACT Rule, the Operations and Maintenance (O&M) Plan includes procedures to be used to periodically monitor PC MACT affected sources which have an opacity limit. These requirements include:

Conducting a **monthly 10-minute** visible emissions test (**Method 22**) of each PC MACT affected source in accordance with Method 22 of 40 CFR 60 Appendix A-7. The performance test is required to be conducted while the PC MACT affected source is in operation.

If no visible emissions are observed in **six consecutive monthly tests** for any PC MACT affected source, the Plant may decrease the frequency of performance testing from monthly to semi-annually for that PC MACT affected source. If visible emissions are observed during any semi-annual test, the Plant is required to resume performance testing of that PC MACT affected source on a monthly basis and maintain that schedule until no visible emissions are observed in six consecutive monthly tests.

If no visible emissions are observed during the **semi-annual test** for any PC MACT affected source, the Plant may decrease the frequency of performance testing from semi-annually to **annually** for that PC MACT affected source. If visible emissions are observed during any annual performance test, the Plant is required to resume performance testing of that PC MACT affected source on a **monthly** basis and maintain that schedule until no visible emissions are observed in six consecutive monthly tests.

If visible emissions are observed during any Method 22 performance test, the Plant is required to conduct a **30-minute** opacity observation (**Method 9)**, **recorded at 15-second intervals**, in accordance with Method 9 as specified in 40 CFR 60 Appendix A-4. The Method 9 performance test is required to **begin within 1-hour** of any observation of visible emissions.

If the results of the Method 9 visible emissions observations indicate that the **10 percent opacity** threshold is exceeded, this will be noted in the plant environmental records. Plans will be developed and a work order will be written to perform maintenance and/or equipment modifications as necessary to ensure that emissions return to and remain at levels below 10 percent opacity.

Also, any totally enclosed conveying system transfer point, regardless of the location of the transfer point is not required to conduct Method 22 visible emissions monitoring. The enclosures for these transfer points are required to be operated and maintained as total enclosures on a continuing basis as specified in the Plant PC MACT O&M Plan.

If any partially enclosed or unenclosed conveying system transfer point is located in a building, the Plant is required to conduct a Method 22 performance test according to the requirements of 40 CFR 63.1350(f)(1)(i) through (iv), as specified above, for each such conveying system transfer point located within the building, or for the building itself.

If visible emissions from a building are monitored, the requirements of 40 CFR 63.1350(f)(1)(i) through (iv) apply to the monitoring of the building, and the Plant is required to also test visible emissions from each side, roof, and vent of the building for at least 10 minutes.

4.2 Finish Mills

For the three finish mills, the Plant uses a COMS system to measure opacity on Finish Mill #1 and Finish Mill #2 and monitors opacity by conducting **daily** visible emissions observations (**Method 22**) of the mill sweep and separator baghouses (i.e., PM control devices (PMCD)) for Finish Mill #3 in accordance with the procedures of Method 22 specified in 40 CFR 60 Appendix A-7.

Method22/Method 9

The daily Method 22 test is required to be conducted while the PC MACT affected source is operating at the representative performance conditions in accordance with 40 CFR 63.7(e). The duration of the Method 22 performance test is required to be **6-minutes**.

If visible emissions are observed during any Method 22 visible emissions test, the Plant is required to perform **within 24 hours** of the end of the Method 22 test in which visible emissions were observed, **a follow-up Method 22** test of each stack from which visible emissions were observed during the previous Method 22 test.

If visible emissions are still observed during the follow-up Method 22, the Plant is required to conduct a visual opacity test (Method 9) of each PC MACT affected source from which visible emissions were observed in accordance with Method 9 of Appendix A of 40 CFR Part 60. The duration of the **Method 9** test is required to be **30-minutes** per 40 CFR 63.1350(f)(2)(ii).

COMS

Per 40 CFR 63.1350(f)(4)(i), since the Plant has chosen to install a COMS in lieu of conducting the daily visible emissions testing on Finish Mill #1 and #2, then the COMS must be installed at the outlet of the PM control device of the finish mill and the COMS

must be installed, maintained, calibrated, and operated as required by the general provisions of 40 CFR 63 Subpart A and according to PS-1 of 40 CFR 60 Appendix B.

The COMS measures opacity on Finish Mills #1 and #2 stacks as a percentage of light passing through the gases compared to the reference light beam originating from the source. The COMS consist of four major components: the transmissometer, the terminal control box, the air-purging system and the remote control unit and data acquisition equipment.

The COMS undergoes an automatic daily calibration control cycle that runs at regular intervals. Specifically, a calibration check is conducted daily for determination of zero and upscale calibration drift. Also, a calibration error test is performed on each COMS at least once every calendar quarter using neutral density audit filters.

Field check verification of the COMS can be performed by conducting a manual Method 9 test.

If a COMS is ever found to be malfunctioning, then the Plant must conduct daily Method 22 visible emissions observations on the finish mill until the COMS returns to normal operation.

The Plant COMS QA/QC Plan contains all required information pertaining to the COMS as specified in 40 CFR 63.1350(p)(1)- (4), as presented in Section 2.0 of this Plan.

4.3 Corrective Actions and Other Required Information

If visible emissions are observed during any Method 22 visible emissions test conducted under paragraphs by 40 CFR 63.1350(f)(1) (i.e., material handling points) or (2) (i.e. finish mills), the Plant is required to **initiate, within 1-hour**, the corrective actions specified in the Plant PC MACT O&M Plan as required by 40 CFR 63.1347.

The Plant COMS QA/QC Plan, Site Specific Monitoring Plan, and the O&M Plan provide information on the necessary corrective action required for the COMS systems.

5.0 Reporting Requirements

40 CFR 63.1354(b)(2) and 40 CFR 63.10(d)(3) require the Plant to report the opacity results from tests that are required by 40 CFR 63.1349.

The Plant is required to **report** per 40 CFR 63.1354(b)(9)(vii) **each violation** of the opacity limit and report the date, duration, and description of each violation and the specific actions taken for each violation including inspections, corrective actions and repeat performance tests, and the results of those actions.

40 CFR 63.1354(c) requires the Plant to report all failures to meet the opacity limit due to a Plant malfunction. For each failure to meet the opacity limit caused by a malfunction, the Plant is required to report each failure in the **Semi-Annual PC MACT Compliance Report (Report)** required by 40 CFR 63.1354(b)(9). The Report is required to contain the date, time and duration, and the cause of each event (including unknown cause, if applicable), and a sum of the number of events in the reporting period. The Report is required to list for each event the PC MACT affected source or equipment, the estimated opacity emitted over the emission limit for which the PC MACT affected source failed to meet a standard (e.g., 20 percent opacity which is 10 percent over the 10 percent opacity limit for the PC MACT affected source), and a description of the method used to estimate opacity. Also, the Report is required to include a description of actions taken by the Plant during the malfunction of the PC MACT affected source for minimizing emissions in accordance with 40 CFR 63.1348(d), including actions taken to correct the malfunction.

6.0 Recordkeeping Requirements

Recordkeeping requirements are presented in 40 CFR 63.1355. The Plant is required to maintain files of all information (including all reports and notifications) recorded in a form suitable and readily available for inspection and review as required by 40 CFR 63.10(b)(1). The files are required to be retained for at least five years following the date of each occurrence, measurement, maintenance, corrective action, report, or record. At a minimum, the most recent two years of data are required to be retained onsite at the Plant. The remaining three years of data may be retained offsite. The files may be maintained on microfilm, on a computer, on floppy disks, on magnetic tape, or on microfiche.

The Plant is required to maintain records for each PC MACT affected source as required by 40 CFR 63.10(b)(2) and (b)(3) and

(1) All documentation supporting initial notifications and notifications of compliance status under 40 CFR 63.9,

(2) All records of applicability determination, including supporting analyses, and

(3) If the Plant has been granted a waiver under 40 CFR 63.8(f)(6), any information demonstrating whether a PC MACT affected source is meeting the requirements for a waiver of recordkeeping or reporting requirements.

Per 40 CFR 63.1355(g)(1), the Plant is required to keep records of the date, time, and duration of each malfunction that causes an PC MACT affected source to fail to meet a PC MACT applicable standard; if there was also a monitoring malfunction, the date, time and duration of the monitoring malfunction; the record is required to list the PC MACT affected source or equipment, an estimate of the volume of each regulated pollutant emitted over the standard for which the PC MACT affected source failed to meet a standard, and a description of the method used to estimate the emissions.

Per 40 CFR 63.1355(g)(2), the Plant is required to keep records of actions taken during periods of malfunction to minimize emissions in accordance with 40 CFR 63.1348(d) including corrective actions to restore malfunctioning process and air pollution control and monitoring equipment to its normal or usual manner of operation.

Per 40 CFR 63.1355(h), for each exceedance of the opacity limit, the Plant is required to keep records of the date, duration and description of each exceedance and the specific actions taken for each exceedance including inspections, corrective actions and repeat performance tests and the results of those actions.

Appendix A
List of PC MACT Affected Sources

MARTINSBURG PLANT
PC MACT Affected Source List

PSD Permit EP ID	CD Description	EU ID	EU Description	SOURCE TYPE	POINT OF COMPLIANCE	MONITORING FREQUENCY	MONITORING METHOD
RAW MATERIAL HANDLING							
EP37.08	-	EP37.08	Limestone/Clinker Storage Pile (Quarry)	FUGITIVE	Operated in accordance with the fugitive dust emission control measures as identified in Section 7.0 of this O&M Plan.		
EP37.11		EP37.11	Limestone/Clinker Storage Pile (Outside Craneway)	FUGITIVE	Operated in accordance with the fugitive dust emission control measures as identified in Section 7.0 of this O&M Plan.		
EP37.12		EP37.12	Limestone/Clinker Transfer to Craneway Storage Building	FUGITIVE	Building Sides/Roof/Vent		Month
CD39.03	Raw Material Discharge D\C 1	EP39.03.03	Shale bin to feeder	BAGHOUSE	DC Outlet	Monthly	10 Minute Method 22
		EP39.03.04	Shale bin feeder to conveyor				
		EP39.02.01	Limestone mix bin to feeder				
		EP39.02.02	Limestone mix feeder to conveyor				
		EP39.08.02	Sand silo to feeder				
		EP39.08.03	Sand silo feeder to conveyor				
		EP39.07.02	Pyrite silo to feeder				
		EP39.07.03	Pyrite silo feeder to conveyor				
CD39.04	Raw Material Discharge D\C 2	EP39.04.02	Shale silo 2 to feeder	BAGHOUSE	DC Outlet	Monthly	10 Minute Method 22
		EP39.04.03	Shale silo 2 feeder to conveyor				
CD39.06	Raw Mill Feeding D\C	EP39.06.01	Raw Mill Feed Conveyor	BAGHOUSE	DC Outlet	Monthly	10 Minute Method 22
CD31.01	Flyash Tank No.1 D\C	EP31.01	Fly Ash Tank #1	BAGHOUSE	DC Outlet	Monthly	10 Minute Method 22
EP39.09	-	EP39.09	Inert Raw Material Storage Pile (Within Mines)	FUGITIVE	Operated in accordance with the fugitive dust emission control measures as identified in Section 7.0 of this O&M Plan.		
RAW GRINDING AND KILN FEED							
CD40.01	Raw Mill High Zone D\C	EP40.01.01	RM Feed Conveyor to conveyor	BAGHOUSE	DC Outlet	Monthly	10 Minute Method 22
		EP40.01.02	Conveyor to split				
		EP40.01.03	Split to hopper				
		EP40.02.03	Elevator to conveyor				
		EP40.04.01	Split to Raw Mill				
CD40.02	Raw Mill Low Zone D\C	EP40.02.01	Conveyor to split	BAGHOUSE	DC Outlet	Monthly	10 Minute Method 22

MARTINSBURG PLANT
PC MACT Affected Source List

PSD Permit EP ID	CD Description	EU ID	EU Description	SOURCE TYPE	POINT OF COMPLIANCE	MONITORING FREQUENCY	MONITORING METHOD
		EP40.02.02	Split to bucket elevator				
		EP40.04.02	Raw Mill to conveyor				
		EP40.02.04	Conveyor to bucket elevator				
CD40.05	Raw Meal Air Slide D\C	EP40.05	Raw Meal Conveying Equipment	BAGHOUSE	DC Outlet	Monthly	10 Minute Method 22
CD40.06	Homo Silo Feeding D\C	EP40.06	Homogenizing Silo Feeding Equipment	BAGHOUSE	DC Outlet	Monthly	10 Minute Method 22
CD40.07	Homo Silo Discharge D\C	EP40.07	Homogenizing Silo Discharging Equipment	BAGHOUSE	DC Outlet	Monthly	10 Minute Method 22
CD40.08	Top of Homogenizing Silo	EP40.08	Top of Homogenizing Silo	BAGHOUSE	DC Outlet	Monthly	10 Minute Method 22
CD42.02	Kiln Feeding Bucket Elevator D\C	EP42.02	Kiln Feeding Bucket Elev DC	BAGHOUSE	DC Outlet	Monthly	10 Minute Method 22
CD42.03	Kiln Feeding D\C 1	EP42.03	Kiln Feed Belt	BAGHOUSE	DC Outlet	Monthly	10 Minute Method 22
CD42.05	Kiln Feeding D\C 2	EP42.05	Kiln Feed Belt	BAGHOUSE	DC Outlet	Monthly	10 Minute Method 22
PREHEATER/PRECALCINER KILN AND CLINKER COOLER & SOLID FUEL GRINDING SYSTEM							
CD41.04	Alternate Fuel Feeding System D/C	EP41.04	Alternate Fuel Feeding System	BAGHOUSE	Main Stack	Continuous	CEMS, CPMS
CD41.05	Alternate Fuel dosing System D/C	EP41.05	Alternate Fuel dosing System	BAGHOUSE	Main Stack	Continuous	CEMS, CPMS
CD42.04	Inline Raw Mill / PH/PC Kiln / Clinker Cooler & Bypass & Coal Mill D\Cs	EP42.04	Kiln System - Inline Raw Mill / PH/PC Kiln / Clinker Cooler	BAGHOUSE	Main Stack	Continuous	CEM, CPMS
		EP42.08	Kiln Bypass Baghouse DC	BAGHOUSE			
		EP41.03.01	Coal Mill	BAGHOUSE			
CD42.01	Cement Fringe Bin D\C	EP42.01	Cement Fringe Bin	BAGHOUSE	DC Outlet	Monthly	10 Minute Method 22
CD42.06	Lime Storage D\C	EP42.06	Lime Storage for Scrubber System	BAGHOUSE	DC Outlet	Monthly	10 Minute Method 22
CD42.07	Bypass Truck Spout Dedusting	EP42.07	Bypass Truck Spout Dedusting	BAGHOUSE	DC Outlet	Monthly	10 Minute Method 22
CD31.02	Bypass Dust Tank D\C	EP31.02	Bypass Dust Tank	BAGHOUSE	DC Outlet	Monthly	10 Minute Method 22
CD31.03	Bypass Dust Loadout D\C	EP31.03	Bypass Dust silo/loadout	BAGHOUSE	DC Outlet	Monthly	10 Minute Method 22
CLINKER/GYPSUM/FM ADDITIVE HANDLING AND STORAGE							
CD43.03	Clinker Storage Feeding D\C	EP43.05	Clinker conveyor to big clinker silo	BAGHOUSE	DC Outlet	Monthly	10 Minute Method 22

MARTINSBURG PLANT
PC MACT Affected Source List

PSD Permit EP ID	CD Description	EU ID	EU Description	SOURCE TYPE	POINT OF COMPLIANCE	MONITORING FREQUENCY	MONITORING METHOD
CD43.19	Top of LA Clinker Silo DC	EP43.19	Top of LA Clinker Silo	BAGHOUSE	DC Outlet	Monthly	10 Minute Method 22
CD43.20	Normal Clinker Bin at Pan Conveyor 73 DC	EP43.20	Normal Clinker Bin at Pan Conveyor 73	BAGHOUSE	DC Outlet	Monthly	10 Minute Method 22
CD43.21	Top of Normal Clinker Silo DC	EP43.21	Top of Normal Clinker Silo	BAGHOUSE	DC Outlet	Monthly	10 Minute Method 22
CD43.04	Small Clinker Storage Feeding D\C	EP43.04	Clinker conveyor to clinker silo	BAGHOUSE	DC Outlet	Monthly	10 Minute Method 22
CD43.06	Small Clinker Storage Discharge D\C	EP43.06.01	Low Alkali Clinker Silo to upper conveyors	BAGHOUSE	DC Outlet	Monthly	10 Minute Method 22
		EP43.06.02	Upper conveyors to lower conveyor				
		EP43.06.03	Low Alkali Clinker silo to lower conveyor				
CD43.07	Clinker Storage Discharge D\C	EP43.07.01	Big clinker silo to upper conveyor1	BAGHOUSE	DC Outlet	Monthly	10 Minute Method 22
		EP43.07.02	Big clinker silo to upper conveyor2				
		EP43.07.03	Big clinker silo to lower conveyor				
		EP43.07.04	Big clinker silo to short conveyor				
		EP43.07.05	Short conveyor to lower conveyor				
CD43.08	Finish Mill Conveying D\C1	EP43.08	Upper conveyor 1 to FM feed hoppers belt	BAGHOUSE	DC Outlet	Monthly	10 Minute Method 22
CD43.09	Finish Mill Conveying D\C2	EP43.09	Lower conveyor to FM feed hoppers belt	BAGHOUSE	DC Outlet	Monthly	10 Minute Method 22
CD43.13	Finish Mill Conveying D\C3	EP43.13	Upper conveyor 2 to FM feed hoppers belt	BAGHOUSE	DC Outlet	Monthly	10 Minute Method 22
CD43.14	Finish Mill 1 & 2 Hoppers D\C	EP43.14	Conveyor to clinker feeding hoppers (FM1 &2)	BAGHOUSE	DC Outlet	Monthly	10 Minute Method 22
		EP43.15	Conveyor to lower conveyor (FM3)	BAGHOUSE	DC Outlet	Monthly	10 Minute Method 22
CD43.16	Finish Mill 3 Hopper D\C	EP43.16	Lower conveyor to clinker feeding hopper (FM3)	BAGHOUSE	DC Outlet	Monthly	10 Minute Method 22
CD43.17	Normal Clinker Bin - Bin Vent	EP43.17	Normal Clinker Bin - Bin Vent	BAGHOUSE	DC Outlet	Monthly	10 Minute Method 22
EP26.06.03	-	EP26.06.03	Gypsum/Synthetic Gypsum truck unloading to storage hall	FUGITIVE	Building Sides/Roof/Vent	Monthly	10 Minute Method 22

MARTINSBURG PLANT
PC MACT Affected Source List

PSD Permit EP ID	CD Description	EU ID	EU Description	SOURCE TYPE	POINT OF COMPLIANCE	MONITORING FREQUENCY	MONITORING METHOD
EP26.06.04	-	EP26.06.04	Clam bucket to gypsum/synthetic gypsum pile	FUGITIVE	Building Sides/Roof/Vent	Monthly	10 Minute Method 22
EP26.06.05	-	EP26.06.05	Gypsum/synthetic gypsum pile to clam bucket	FUGITIVE	Building Sides/Roof/Vent	Monthly	10 Minute Method 22
EP26.06.06	-	EP26.06.06	Clam bucket to gypsum/synthetic gypsum bin (FM1/2/3)	FUGITIVE	Building Sides/Roof/Vent	Monthly	10 Minute Method 22
EP26.07.01	-	EP26.07.01	Limestone Pile to clam bucket	FUGITIVE	Building Sides/Roof/Vent	Monthly	10 Minute Method 22
EP26.07.02	-	EP26.07.02	Clam bucket to limestone bin (FM1/2/3)	FUGITIVE	Building Sides/Roof/Vent	Monthly	10 Minute Method 22
EP27.01	-	EP27.01	Conveyor to clinker hopper	FUGITIVE	Building Sides/Roof/Vent	Monthly	10 Minute Method 22
EP27.02	-	EP27.02	Clinker hopper to crane	FUGITIVE	Building Sides/Roof/Vent	Monthly	10 Minute Method 22
EP27.03	-	EP27.03	Crane to clinker pile	FUGITIVE	Building Sides/Roof/Vent	Monthly	10 Minute Method 22
EP14.08	-	EP14.08	Clinker stockpile (Craneway)	FUGITIVE	Building Sides/Roof/Vent	Monthly	10 Minute Method 22
EP27.04	-	EP27.04	Clinker pile to crane	FUGITIVE	Building Sides/Roof/Vent	Monthly	10 Minute Method 22
EP27.05	-	EP27.05	Crane to clinker bins (FM1/2/3)	FUGITIVE	Building Sides/Roof/Vent	Monthly	10 Minute Method 22
EP27.06	-	EP27.06	Transfer to Outdoor Clinker Storage Pile	FUGITIVE	Building Sides/Roof/Vent	Monthly	10 Minute Method 22
EP27.07	-	EP27.07	Outdoor Clinker Storage Pile - Tarped	FUGITIVE	Operated in accordance with the fugitive dust emission control measures as identified in Section 7.0 of this O&M Plan.		
EP26.08	-	EP26.08	Outdoor Clinker Storage Pile Reclaim	FUGITIVE	Building Sides/Roof/Vent	Monthly	10 Minute Method 22
FINISH MILL SYSTEMS							
CD44.01	Finish Mill 2 Feeding D\C1	EP44.01	L.A. clinker bin to FM2 conveyor	BAGHOUSE	DC Outlet	Monthly	10 Minute Method 22
CD44.02	Finish Mill 1 Feeding D\C1	EP44.02	Clinker bin to FM1 conveyor	BAGHOUSE	DC Outlet	Monthly	10 Minute Method 22
CD44.03	Finish Mill 2 Feeding D\C2	EP44.03	Clinker bin to FM2 conveyor	BAGHOUSE	DC Outlet	Monthly	10 Minute Method 22
CD44.04	Finish Mill 2 Feeding	EP44.04.01	Limestone bin to FM2 conveyor	BAGHOUSE	DC Outlet	Monthly	10 Minute Method 22

MARTINSBURG PLANT
PC MACT Affected Source List

PSD Permit EP ID	CD Description	EU ID	EU Description	SOURCE TYPE	POINT OF COMPLIANCE	MONITORING FREQUENCY	MONITORING METHOD
	D\C3	EP44.04.02	Gypsum/synthetic gypsum bin to FM2 conveyor	BAGHOUSE			
CD44.05	Finish Mill 1 Feeding D\C 2	EP44.05.01	Limestone bin to FM1 conveyor	BAGHOUSE	DC Outlet	Monthly	10 Minute Method 22
		EP44.05.02	Gypsum/synthetic gypsum bin to FM1 conveyor	BAGHOUSE			
CD19.02	Finish Mill 3 Baghouse D\C	EP19.01Pb	No. 3 Finish Mill Separator (Existing FM 10)	BAGHOUSE	DC Outlet	Daily	6 Minute Method 22
CD19.01	Finish Mill 3 Norblo D\C	EP19.01U	FM3 Feed bins to feeders	BAGHOUSE	DC Outlet	Daily	6 Minute Method 22
		EP19.01Pa.01	FM3 Feeders to belt conveyor 650	BAGHOUSE			
		EP19.01Pa.02	Belt conveyor 650 to FM3	BAGHOUSE			
		EP19.02	Finish Mill 3	BAGHOUSE			
CD44.06	Finish Mill 1 Conveying D\C	EP44.06	FM1 Conveyor to conveyor	BAGHOUSE	DC Outlet	Monthly	10 Minute Method 22
CD44.07	Finish Mill 1 High Zone D\C	EP44.07.01	Elevator to FM1 conveyor	BAGHOUSE	DC Outlet	Monthly	10 Minute Method 22
		EP44.07.02	FM1 Conveyor to bin	BAGHOUSE			
		EP44.07.03	Conveyor to Finish Mill 1	BAGHOUSE			
CD44.08	Finish Mill 1 Low Zone D\C	EP44.08.01	Finish Mill 1 to Conveyor	BAGHOUSE	DC Outlet	Monthly	10 Minute Method 22
		EP44.08.02	Bin to FM1 conveyor	BAGHOUSE			
		EP44.08.03	FM1 Conveyor to bucket elevator	BAGHOUSE			
CD44.09	Finish Mill 1 D\C	EP44.09	Finish Mill 1	BAGHOUSE	DC Outlet	Daily	6 Minute Method 22
CD44.13	Finish Mill 1 Discharge D\C	EP44.13	Finish Mill 1 Conveying	BAGHOUSE	DC Outlet	Monthly	10 Minute Method 22
CD44.14	Finish Mill 2 Conveying D\C	EP44.14	FM2 Conveyor to conveyor	BAGHOUSE	DC Outlet	Monthly	10 Minute Method 22
CD44.10	Finish Mill 2 High Zone D\C	EP44.10.01	FM2 Elevator to conveyor	BAGHOUSE	DC Outlet	Monthly	10 Minute Method 22
		EP44.10.02	FM2 Conveyor to bin	BAGHOUSE			
		EP44.10.03	Conveyor to Finish Mill 2	BAGHOUSE			
CD44.11	Finish Mill 2 Low Zone D\C	EP44.11.01	Finish Mill 2 to conveyor	BAGHOUSE	DC Outlet	Monthly	10 Minute Method 22
		EP44.11.02	Bin to FM2 conveyor	BAGHOUSE			
		EP44.11.03	FM2 Conveyor to bucket elevator	BAGHOUSE			
CD44.12	Finish Mill 2 D\C	EP44.12	Finish Mill 2	BAGHOUSE	DC Outlet	Daily	6 Minute Method 22

MARTINSBURG PLANT
PC MACT Affected Source List

PSD Permit EP ID	CD Description	EU ID	EU Description	SOURCE TYPE	POINT OF COMPLIANCE	MONITORING FREQUENCY	MONITORING METHOD
CD44.15	Finish Mill 2 Discharge D\C	EP44.15	Finish Mill 2 Conveying	BAGHOUSE	DC Outlet	Monthly	10 Minute Method 22
CD44.09 CD44.12	Finish Mill 1/2 Air Heater	EP44.16	Finish Mill 1/2 Air Heater	BAGHOUSE	DC Outlet	Daily	6 Minute Method 22
CD44.17	Finish Mills Reject Bin	EP44.17	Finish Mills Reject Bin	BAGHOUSE	DC Outlet	Monthly	10 Minute Method 22
CD44.18	Finish Mill 1 Reject Elevator High Zone DC	EP44.18	Finish Mill 1 Reject Elevator High Zone	BAGHOUSE	DC Outlet	Monthly	10 Minute Method 22
CD44.19	Finish Mill 2 Reject Elevator High Zone DC	EP44.19	Finish Mill 2 Reject Elevator High Zone	BAGHOUSE	DC Outlet	Monthly	10 Minute Method 22
CEMENT DISTRIBUTION							
CD45.01	Finish Mill 1 Airslides D\C	EP45.01	Finish Mill 1 airslides	BAGHOUSE	DC Outlet	Monthly	10 Minute Method 22
CD45.02	Finish Mill 2 Airslides D\C	EP45.02	Finish Mill 2 airslides	BAGHOUSE	DC Outlet	Monthly	10 Minute Method 22
CD45.03	Cement Silos Feeding D\C1	EP45.03	Finish Mill 1 to cement silos	BAGHOUSE	DC Outlet	Monthly	10 Minute Method 22
CD45.04	Cement Silos Feeding D\C2	EP45.04	Finish Mill 2 to cement silos	BAGHOUSE	DC Outlet	Monthly	10 Minute Method 22
CD45.05	Cement Silo A1 & A2 D\C	EP45.05	Cement Silo A1 & A2	BAGHOUSE	DC Outlet	Monthly	10 Minute Method 22
CD45.06	Cement Silo B1 & B2 D\C	EP45.06	Cement Silo B1 & B2	BAGHOUSE	DC Outlet	Monthly	10 Minute Method 22
CD45.07	Cement Silo C1 & C2 D\C	EP45.07	Cement Silo C1 & C2	BAGHOUSE	DC Outlet	Monthly	10 Minute Method 22
CD45.08	Truck Loadout 1 D\C	EP45.08	Bulk lane loadout 1	BAGHOUSE	DC Outlet	Monthly	10 Minute Method 22
CD45.09	Truck Loadout 2 D\C	EP45.09	Bulk lane loadout 2	BAGHOUSE	DC Outlet	Monthly	10 Minute Method 22
CD45.10	Truck Loadout 3 D\C	EP45.10	Bulk lane loadout 3	BAGHOUSE	DC Outlet	Monthly	10 Minute Method 22
CD45.11	Truck Loadout 4 D\C	EP45.11	Bulk lane loadout 4	BAGHOUSE	DC Outlet	Monthly	10 Minute Method 22
CD21.05	Middle Bank Silos 1 D\C	EP21.05	Middle Bank Silos 1 DC	BAGHOUSE	DC Outlet	Monthly	10 Minute Method 22
CD21.06	Middle Bank Silos 2 D\C	EP21.06	Middle Bank Silos 2 DC	BAGHOUSE	DC Outlet	Monthly	10 Minute Method 22
CD21.07	Middle Bank Silos 3 D\C	EP21.07	Middle Bank Silos 3 DC	BAGHOUSE	DC Outlet	Monthly	10 Minute Method 22
CD21.08	Middle Bank Silos 4 D\C	EP21.08	Middle Bank Silos 4 DC	BAGHOUSE	DC Outlet	Monthly	10 Minute Method 22

MARTINSBURG PLANT
PC MACT Affected Source List

PSD Permit EP ID	CD Description	EU ID	EU Description	SOURCE TYPE	POINT OF COMPLIANCE	MONITORING FREQUENCY	MONITORING METHOD
CD21.09	Middle Bank Silos 5 D\C	EP21.09	Middle Bank Silos 5 DC	BAGHOUSE	DC Outlet	Monthly	10 Minute Method 22
CD21.10	Middle Bank Vent 1 D\C	EP21.10	Middle Bank Bin Vent 1 - Silos Inlet	BAGHOUSE	DC Outlet	Monthly	10 Minute Method 22
CD21.11	Middle Bank Vent 2 D\C	EP21.11	Middle Bank Bin Vent 2 - Silos Inlet	BAGHOUSE	DC Outlet	Monthly	10 Minute Method 22
CD21.12	South Middle Bank CP Pump DC	EP21.12	South Middle Bank CP Pump	BAGHOUSE	DC Outlet	Monthly	10 Minute Method 22
CD21.13	North Middle Bank CP Pump DC	EP21.13	North Middle Bank CP Pump	BAGHOUSE	DC Outlet	Monthly	10 Minute Method 22
CD45.12	Rail Loadout 1 D\C	EP45.12	Bulk rail loadout 1	BAGHOUSE	DC Outlet	Monthly	10 Minute Method 22
CD45.13	Rail Loadout 2 D\C	EP45.13	Bulk rail loadout 2	BAGHOUSE	DC Outlet	Monthly	10 Minute Method 22
CD45.14	Cement Analyzer D\C	EP45.14	Cement Analyzer	BAGHOUSE	DC Outlet	Monthly	10 Minute Method 22
CD45.15	Transfer Airslide D\C at the Multi Cell	EP45.15	Transfer Airslide at the Multi Cell	BAGHOUSE	DC Outlet	Monthly	10 Minute Method 22
CD45.16	Rail Transloader D\C	EP45.16	Rail Transloader	BAGHOUSE	DC Outlet	Monthly	10 Minute Method 22
CD46.01	Truck Loadout Silo 1 D\C	EP46.01	Truck Loadout Silo 1	BAGHOUSE	DC Outlet	Monthly	10 Minute Method 22
CD46.02	Truck Loadout Silo 2 D\C	EP46.02	Truck Loadout Silo 2	BAGHOUSE	DC Outlet	Monthly	10 Minute Method 22
CD46.03	Truck Loadout Silo 3 D\C	EP46.03	Truck Loadout Silo 3	BAGHOUSE	DC Outlet	Monthly	10 Minute Method 22
CD46.04	Truck Loadout Silo 4 D\C	EP46.04	Truck Loadout Silo 4	BAGHOUSE	DC Outlet	Monthly	10 Minute Method 22
CD46.05	Truck Loadout Silo 5 D\C	EP46.05	Truck Loadout Silo 5	BAGHOUSE	DC Outlet	Monthly	10 Minute Method 22
CD46.06	Truck Loadout 5 D\C	EP46.06	Bulk loadout 5 - Truck Loadout Silos	BAGHOUSE	DC Outlet	Monthly	10 Minute Method 22
CD46.07	Truck Loadout 6 D\C	EP46.07	Bulk loadout 6 - Truck Loadout Silos	BAGHOUSE	DC Outlet	Monthly	10 Minute Method 22
CD20.04	East Bank Silos 1 D\C	EP20.04	East Bank Silos 1	BAGHOUSE	DC Outlet	Monthly	10 Minute Method 22
CD20.05	East Bank Silos 2 D\C	EP20.05	East Bank Silos 2	BAGHOUSE	DC Outlet	Monthly	10 Minute Method 22
CD20.06	East Bank Silos 3 D\C	EP20.06	East Bank Silos 3	BAGHOUSE	DC Outlet	Monthly	10 Minute Method 22
CD48.01	Packhouse D\C	EP48.01	Packhouse	BAGHOUSE	DC Outlet	Monthly	10 Minute Method 22
CD23.01	N.E. PACKER D/C	EP23.01	Packer #1 N.E.	BAGHOUSE	DC Outlet	Monthly	10 Minute Method 22
CD22.05	West Bank Silo #70/71 D\C	EP22.05	West Bank Silos #70/#71	BAGHOUSE	DC Outlet	Monthly	10 Minute Method 22
CD22.06	West Bank Silo #72 D\C	EP22.06	West Bank Silos #72	BAGHOUSE	DC Outlet	Monthly	10 Minute Method 22

MARTINSBURG PLANT
PC MACT Affected Source List

PSD Permit EP ID	CD Description	EU ID	EU Description	SOURCE TYPE	POINT OF COMPLIANCE	MONITORING FREQUENCY	MONITORING METHOD
CD22.07	West Bank Silo #84 D\C	EP22.07	West Bank Silos #84	BAGHOUSE	DC Outlet	Monthly	10 Minute Method 22
CD22.08	West Bank Silo Loadout Spout D\C	EP22.08	West Bank Silos Loadout Spout	BAGHOUSE	DC Outlet	Monthly	10 Minute Method 22
CD22.09	Dry Flyash Weigh Bin D\C	EP22.09	Dry Flyash Weigh Bin/Alleviator	BAGHOUSE	DC Outlet	Monthly	10 Minute Method 22

ATTACHMENT M – ELECTRONIC COPY OF THE TITLE V OPERATING PERMIT RENEWAL APPLICATION

Provided on the enclosed CD is a complete electronic copy of the Title V Operating Permit Renewal Application.