WEST VIRGINIA DEPARTMENT OF ENVIRONMENTAL PROTECTION
OFFICE OF AIR QUALITY

PERMIT MODIFICATION

JF ALLEN COMPANY
McALPIN SITE
R13-2109

CLAY DISTRICT
HARRISON COUNTY
WEST VIRGINIA

J. F. Allen Co.
Bridgeport/Asphalt
033-00127
R13-2109A
Lee Martin

WEST VIRGINIA DEPARTMENT OF ENVIRONMENTAL PROTECTION
OFFICE OF AIR QUALITY

PERMIT MODIFICATION

RECEIVED
JUL 20 2016
WV DEP / DIV OF AIR QUALITY

JF ALLEN COMPANY
McALPIN SITE
R13-2109

CLAY DISTRICT
HARRISON COUNTY
WEST VIRGINIA

PREPARED BY:

SURVEYOR & ASSOCIATES, INC.
119 EAST HIGH STREET
KINGWOOD, WEST VIRGINIA 26537
PHONE: (304) 329-2325

TABLE OF CONTENTS

General Applicant Information ----------Section I-V

Business Certificate ----------Attachment A

Map ----------Attachment B

Installation & Start Up Schedule ----------Attachment C

Regulatory Discussion ----------Attachment D

Plot Plan----------Attachment E

Detailed Process Flow Diagram ----------Attachment F

Process Description ----------Attachment G

Emission Units Table ----------Attachment I

Emission Points Data Summary Sheet ----------Attachment J

Fugitive Emissions Data Summary Sheet ----------Attachment K

Emissions Unit Data Sheet ----------Attachment L

Supporting Emissions Calculations ----------Attachment N

Monitoring/Recordkeeping/Reporting/Testing Plans ----------Attachment O

Public Notice ----------Attachment P

Title V Permit Revision Information ----------Attachment S

Application Fee ----------Other

Summary of Modification

The primary purpose of this permit modification is to allow J.F. Allen Company to add the capability to utilize Reclaimed Asphalt Material Process at this facility. Additionally, it is proposed at this time to increase the capacity of this facility. Currently it is permitted for a maximum production rate of 432,000 tons/year. This proposed modification would increase that rate to 600,000 tons/year. Also, the current operating schedule is set at 10 hours per day, 5 days per week, 260 days per year for a total annual rate of 2,600 hours per year. This proposal would increase the operating schedule up to 3,840 hours per year. The operating schedule has been revised to more accurately reflect the potential total annual working hours. While it is not expected to be a sustained schedule, there could be peak times of 16 hours per day and 6 days per week, however it is expected to be operational only 40 weeks per year. The annual maximum hours per year will never exceed 3,840 hours. Also, updates to the facility from the original proposal will include paved haulroads and increased stockpile areas.

Calculations included in this application are based on the delta of 168,000 tons/year and it is these amounts that will be reflected in the advertisement. See the attached Plot Plan and Process Flow Diagram drawings for further details. The modifications are shown in red while existing conditions are shown in black.

Summary of Modification

Pollutant	Existing tpy[1]	Proposed tpy[2]	lb/ton* HMA	Annual Tonnage Δ	ppy Δ	tpy Δ
PM	11.6	45.775	0.033	168,000	5,544	2.77
crushing/screening						0.331
transfer points						2.126
stockpiles						0.925
haulroads						14.83
					Total	20.982
PM10	5.1	15.574	0.023	168,000	3,864	1.93
crushing/screening						0.118
transfer points						1.006
stockpiles						0.435
haulroads						2.89
					Total	6.379
CO	12.3	39	0.13	168,000	21,840	10.92
NO_x	7	7.8	0.026	168,000	4,368	2.18
SO_2	0.91	1.02	0.0034	168,000	571.2	0.29
VOC	6.7	9.6	0.032	168,000	5,376	2.69
CH_4		3.6	0.012	168,000	2,016	1.01
Pb		0.01	6.2×10^{-7}	168,000	0.10416	0.01

*AP42 based on natural gas usage

[1] current limits permitted June 10, 1997

[2] proposed limits based on annual tonnage of 600,000

WEST VIRGINIA DEPARTMENT OF ENVIRONMENTAL PROTECTION

DIVISION OF AIR QUALITY

601 57th Street, SE
Charleston, WV 25304
(304) 926-0475
www.dep.wv.gov/daq

APPLICATION FOR NSR PERMIT AND TITLE V PERMIT REVISION (OPTIONAL)

PLEASE CHECK ALL THAT APPLY TO **NSR (45CSR13)** (IF KNOWN):

☐ **CONSTRUCTION** ☒ **MODIFICATION** ☐ **RELOCATION**
☐ **CLASS I ADMINISTRATIVE UPDATE** ☐ **TEMPORARY**
☐ **CLASS II ADMINISTRATIVE UPDATE** ☐ **AFTER-THE-FACT**

PLEASE CHECK TYPE OF **45CSR30 (TITLE V)** REVISION (IF ANY):

☐ **ADMINISTRATIVE AMENDMENT** ☐ **MINOR MODIFICATION**
☐ **SIGNIFICANT MODIFICATION**

IF ANY BOX ABOVE IS CHECKED, INCLUDE TITLE V REVISION INFORMATION AS **ATTACHMENT S** TO THIS APPLICATION

FOR TITLE V FACILITIES ONLY: Please refer to "Title V Revision Guidance" in order to determine your Title V Revision options (Appendix A, "Title V Permit Revision Flowchart") and ability to operate with the changes requested in this Permit Application.

Section I. General

1. Name of applicant *(as registered with the WV Secretary of State's Office):*
J.F. Allen Company

2. Federal Employer ID No. ***(FEIN):***
55-0328627

3. Name of facility *(if different from above):*
McAlpin Site

4. The applicant is the:
☐ **OWNER** ☐ **OPERATOR** ☒ **BOTH**

5A. Applicant's mailing address:
PO Box 2049
Buckhannon, WV 26201

5B. Facility's present physical address:
Saltwell Road (Rt 131)
Bridgeport, WV 26330

6. **West Virginia Business Registration.** Is the applicant a resident of the State of West Virginia? ☒ **YES** ☐ **NO**
- ➪ If **YES,** provide a copy of the **Certificate of Incorporation/Organization/Limited Partnership** (one page) including any name change amendments or other Business Registration Certificate as **Attachment A.**
- ➪ If **NO,** provide a copy of the **Certificate of Authority/Authority of L.L.C./Registration** (one page) including any name change amendments or other Business Certificate as **Attachment A.**

7. If applicant is a subsidiary corporation, please provide the name of parent corporation: N/A

8. Does the applicant own, lease, have an option to buy or otherwise have control of the *proposed site?* ☒ **YES** ☐ **NO**
- ➪ If **YES,** please explain: **(Option to buy property was executed on December 6, 1996)**
- ➪ If **NO,** you are not eligible for a permit for this source.

9. Type of plant or facility (stationary source) to be **constructed, modified, relocated, administratively updated** or **temporarily permitted** (e.g., coal preparation plant, primary crusher, etc.): **Counterflow Drum Mix Asphalt Plant**

10. North American Industry Classification System **(NAICS)** code for the facility:
324121 (2951)

11A. DAQ Plant ID No. (for existing facilities only):
033-00127

11B. List all current 45CSR13 and 45CSR30 (Title V) permit numbers associated with this process (for existing facilities only):
R13 – 2109

All of the required forms and additional information can be found under the Permitting Section of DAQ's website, or requested by phone.

RECEIVED
JUL 20 2016
DIV OF AIR QUALITY

12A.

- ➪ For **Modifications, Administrative Updates** or **Temporary permits** at an existing facility, please provide directions to the *present location* of the facility from the nearest state road;
- ➪ For **Construction** or **Relocation permits,** please provide directions to the *proposed new site location* from the nearest state road. Include a **MAP** as **Attachment B**.

From Interstate 79N take exit 125 (Shinnston/Saltwell Road), turn left onto Saltwell Road (WV Route 131), travel approximately 1.2 miles to the site on the left.

12.B. New site address (if applicable): **N/A**	12C. Nearest city or town: **Bridgeport**	12D. County: **Harrison**
12.E. UTM Northing (KM): **4354.89**	12F. UTM Easting (KM): **565.70**	12G. UTM Zone:

13. Briefly describe the proposed change(s) at the facility:
Add a RAP System (Reclaim Asphalt Product) and potential for using a portable screen deck and crusher on an as needed basis during peak season, also update Site Plan and Process Flow Diagram to show current configuration.

14A. Provide the date of anticipated installation or change: **08/01/2016** ➪ If this is an **After-The-Fact** permit application, provide the date upon which the proposed change did happen: / /	14B. Date of anticipated Start-Up if a permit is granted: **08/01/2016**

14C. Provide a **Schedule** of the planned **Installation** of/**Change** to and **Start-Up** of each of the units proposed in this permit application as **Attachment C** (if more than one unit is involved).

15. Provide maximum projected **Operating Schedule** of activity/activities outlined in this application:
Hours Per Day 16 Days Per Week 6 Weeks Per Year 40

16. Is demolition or physical renovation at an existing facility involved? ☐ **YES** ☒ **NO**

17. **Risk Management Plans.** If this facility is subject to 112(r) of the 1990 CAAA, or will become subject due to proposed changes (for applicability help see www.epa.gov/ceppo), submit your **Risk Management Plan (RMP)** to U. S. EPA Region III.

18. **Regulatory Discussion.** List all Federal and State air pollution control regulations that you believe are applicable to the proposed process *(if known).* A list of possible applicable requirements is also included in Attachment S of this application (Title V Permit Revision Information). Discuss applicability and proposed demonstration(s) of compliance *(if known).* Provide this information as **Attachment D.**

Section II. Additional attachments and supporting documents.

19. Include a check payable to WVDEP – Division of Air Quality with the appropriate **application fee** (per 45CSR22 and 45CSR13).

20. Include a **Table of Contents** as the first page of your application package.

21. Provide a **Plot Plan,** e.g. scaled map(s) and/or sketch(es) showing the location of the property on which the stationary source(s) is or is to be located as **Attachment E** (Refer to ***Plot Plan Guidance***) .
➪ Indicate the location of the nearest occupied structure (e.g. church, school, business, residence).

22. Provide a **Detailed Process Flow Diagram(s)** showing each proposed or modified emissions unit, emission point and control device as **Attachment F.**

23. Provide a **Process Description** as **Attachment G.**
➪ Also describe and quantify to the extent possible all changes made to the facility since the last permit review (if applicable).

All of the required forms and additional information can be found under the Permitting Section of DAQ's website, or requested by phone.

24. Provide **Material Safety Data Sheets (MSDS)** for all materials processed, used or produced as **Attachment H.**

➪ For chemical processes, provide a MSDS for each compound emitted to the air.

25. Fill out the **Emission Units Table** and provide it as **Attachment I.**

26. Fill out the **Emission Points Data Summary Sheet (Table 1 and Table 2)** and provide it as **Attachment J.**

27. Fill out the **Fugitive Emissions Data Summary Sheet** and provide it as **Attachment K.**

28. Check all applicable **Emissions Unit Data Sheets** listed below:

☐ Bulk Liquid Transfer Operations
☐ Chemical Processes
☐ Concrete Batch Plant
☐ Grey Iron and Steel Foundry
☐ General Emission Unit, specify
☒ Haul Road Emissions
☒ Hot Mix Asphalt Plant
☐ Incinerator
☐ Indirect Heat Exchanger
☐ Quarry
☐ Solid Materials Sizing, Handling and Storage Facilities
☐ Storage Tanks

Fill out and provide the **Emissions Unit Data Sheet(s)** as **Attachment L.**

29. Check all applicable **Air Pollution Control Device Sheets** listed below:

☐ Absorption Systems
☐ Adsorption Systems
☐ Afterburner
☒ Baghouse
☐ Condenser
☐ Electrostatic Precipitator
☐ Flare
☐ Mechanical Collector
☐ Wet Collecting System

☐ Other Collectors, specify

Fill out and provide the **Air Pollution Control Device Sheet(s)** as **Attachment M.**

30. Provide all **Supporting Emissions Calculations** as **Attachment N,** or attach the calculations directly to the forms listed in Items 28 through 31.

31. **Monitoring, Recordkeeping, Reporting and Testing Plans.** Attach proposed monitoring, recordkeeping, reporting and testing plans in order to demonstrate compliance with the proposed emissions limits and operating parameters in this permit application. Provide this information as **Attachment O.**

➢ Please be aware that all permits must be practically enforceable whether or not the applicant chooses to propose such measures. Additionally, the DAQ may not be able to accept all measures proposed by the applicant. If none of these plans are proposed by the applicant, DAQ will develop such plans and include them in the permit.

32. **Public Notice.** At the time that the application is submitted, place a **Class I Legal Advertisement** in a newspaper of general circulation in the area where the source is or will be located (See 45CSR§13-8.3 through 45CSR§13-8.5 and ***Example Legal Advertisement*** for details). Please submit the **Affidavit of Publication** as **Attachment P** immediately upon receipt.

33. **Business Confidentiality Claims.** Does this application include confidential information (per 45CSR31)?

☐ **YES** ☒ **NO**

➢ If **YES,** identify each segment of information on each page that is submitted as confidential and provide justification for each segment claimed confidential, including the criteria under 45CSR§31-4.1, and in accordance with the DAQ's ***"Precautionary Notice – Claims of Confidentiality"*** guidance found in the ***General Instructions*** as **Attachment Q.**

Section III. Certification of Information

34. **Authority/Delegation of Authority.** Only required when someone other than the responsible official signs the application. Check applicable **Authority Form** below:

☐ Authority of Corporation or Other Business Entity
☐ Authority of Governmental Agency
☐ Authority of Partnership
☐ Authority of Limited Partnership

Submit completed and signed **Authority Form** as **Attachment R.**

All of the required forms and additional information can be found under the Permitting Section of DAQ's website, or requested by phone.

35A. **Certification of Information.** To certify this permit application, a Responsible Official (per 45CSR§13-2.22 and 45CSR§30-2.28) or Authorized Representative shall check the appropriate box and sign below.

Certification of Truth, Accuracy, and Completeness

I, the undersigned ☒ **Responsible Official** / ☐ **Authorized Representative,** hereby certify that all information contained in this application and any supporting documents appended hereto, is true, accurate, and complete based on information and belief after reasonable inquiry I further agree to assume responsibility for the construction, modification and/or relocation and operation of the stationary source described herein in accordance with this application and any amendments thereto, as well as the Department of Environmental Protection, Division of Air Quality permit issued in accordance with this application, along with all applicable rules and regulations of the West Virginia Division of Air Quality and W.Va. Code § 22-5-1 et seq. (State Air Pollution Control Act). If the business or agency changes its Responsible Official or Authorized Representative, the Director of the Division of Air Quality will be notified in writing within 30 days of the official change.

Compliance Certification

Except for requirements identified in the Title V Application for which compliance is not achieved, I, the undersigned hereby certify that, based on information and belief formed after reasonable inquiry, all air contaminant sources identified in this application are in compliance with all applicable requirements.

SIGNATURE _____ DATE: JUNE 21, 2016

(Please use blue ink) *(Please use blue ink)*

35B. Printed name of signee: DELBERT E. LEATHERMAN		35C. Title: VICE PRESIDENT
35D. E-mail: DLeatherman@jfallenco.com	36E. Phone: 304-472-8890	36F. FAX: 304-472-8897
36A. Printed name of contact person (if different from above): Rose Riggs		36B. Title: Safety & Environ. Manager
36C. E-mail: RRiggs@jfallenco.com	36D. Phone: (304) 635-7303	36E. FAX: (304) 472-8897

PLEASE CHECK ALL APPLICABLE ATTACHMENTS INCLUDED WITH THIS PERMIT APPLICATION:

- ☒ **Attachment A: Business Certificate**
- ☒ **Attachment B: Map(s)**
- ☒ **Attachment C: Installation and Start Up Schedule**
- ☒ **Attachment D: Regulatory Discussion**
- ☒ **Attachment E: Plot Plan**
- ☒ **Attachment F: Detailed Process Flow Diagram(s)**
- ☒ **Attachment G: Process Description**
- ☐ **Attachment H: Material Safety Data Sheets (MSDS)**
- ☒ **Attachment I: Emission Units Table**
- ☒ **Attachment J: Emission Points Data Summary Sheet**
- ☒ **Attachment K: Fugitive Emissions Data Summary Sheet**
- ☒ **Attachment L: Emissions Unit Data Sheet(s)**
- ☐ **Attachment M: Air Pollution Control Device Sheet(s)**
- ☒ **Attachment N: Supporting Emissions Calculations**
- ☒ **Attachment O: Monitoring/Recordkeeping/Reporting/Testing Plans**
- ☒ **Attachment P: Public Notice**
- ☐ **Attachment Q: Business Confidential Claims**
- ☐ **Attachment R: Authority Forms**
- ☒ **Attachment S: Title V Permit Revision Information**
- ☒ **Application Fee**

Please mail an original and three (3) copies of the complete permit application with the signature(s) to the DAQ, Permitting Section, at the address listed on the first page of this application. Please DO NOT fax permit applications.

FOR AGENCY USE ONLY – IF THIS IS A TITLE V SOURCE:

- ☐ ***Forward 1 copy of the application to the Title V Permitting Group and:***
- ☐ ***For Title V Administrative Amendments:***
  - ☐ ***NSR permit writer should notify Title V permit writer of draft permit,***
- ☐ ***For Title V Minor Modifications:***
  - ☐ ***Title V permit writer should send appropriate notification to EPA and affected states within 5 days of receipt,***
  - ☐ ***NSR permit writer should notify Title V permit writer of draft permit.***
- ☐ ***For Title V Significant Modifications processed in parallel with NSR Permit revision:***
  - ☐ ***NSR permit writer should notify a Title V permit writer of draft permit,***
  - ☐ ***Public notice should reference both 45CSR13 and Title V permits,***
  - ☐ ***EPA has 45 day review period of a draft permit.***

All of the required forms and additional information can be found under the Permitting Section of DAQ's website, or requested by phone.

ATTACHMENT A

BUSINESS CERTIFICATE

WEST VIRGINIA
STATE TAX DEPARTMENT
BUSINESS REGISTRATION CERTIFICATE

ISSUED TO:
J F ALLEN COMPANY
SALTWELL RD 131 MCALPIN
BRIDGEPORT, WV 26330

Saltwell Asphalt

BUSINESS REGISTRATION ACCOUNT NUMBER: **1034-2438**

This certificate is issued on: **06/25/2010**

This certificate is issued by
the West Virginia State Tax Commissioner
in accordance with W.Va. Code § 11-12.

The person or organization identified on this certificate is registered to conduct business in the State of West Virginia at the location above.

This certificate is not transferrable and must be displayed at the location for which issued.

This certificate shall be permanent until cessation of the business for which the certificate of registration was granted or until it is suspended, revoked or cancelled by the Tax Commissioner.

Change in name or change of location shall be considered a cessation of the business and a new certificate shall be required.

TRAVELING/STREET VENDORS: Must carry a copy of this certificate in every vehicle operated by them.
CONTRACTORS, DRILLING OPERATORS, TIMBER/LOGGING OPERATIONS: Must have a copy of this certificate displayed at every job site within West Virginia.

atL006 v.1
L1010817792

ATTACHMENT B

MAP

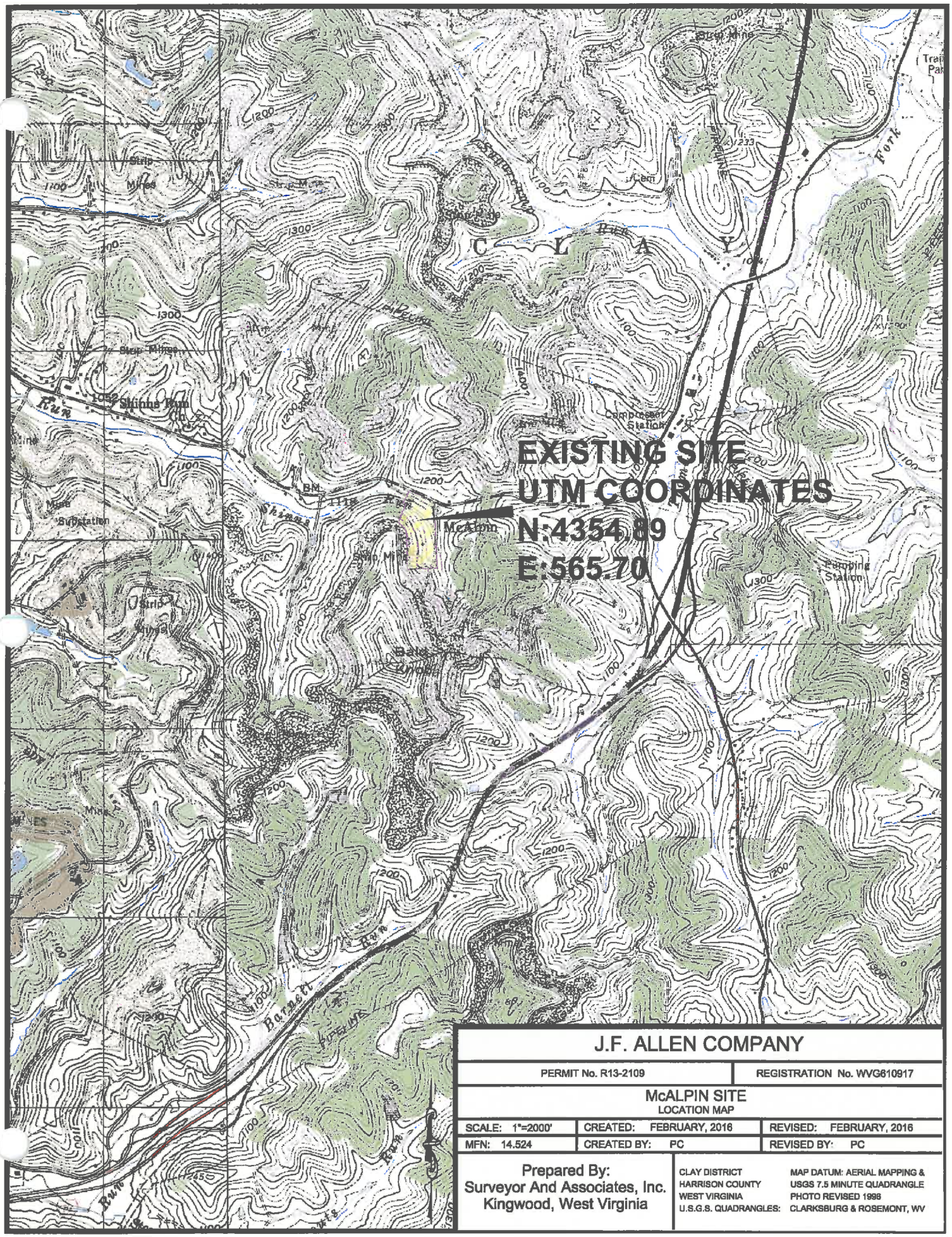

J.F. ALLEN COMPANY		
PERMIT No. R13-2109		REGISTRATION No. WVG610917
McALPIN SITE LOCATION MAP		
SCALE: 1"=2000'	CREATED: FEBRUARY, 2016	REVISED: FEBRUARY, 2016
MFN: 14.524	CREATED BY: PC	REVISED BY: PC
Prepared By: Surveyor And Associates, Inc. Kingwood, West Virginia	CLAY DISTRICT HARRISON COUNTY WEST VIRGINIA U.S.G.S. QUADRANGLES:	MAP DATUM: AERIAL MAPPING & USGS 7.5 MINUTE QUADRANGLE PHOTO REVISED 1998 CLARKSBURG & ROSEMONT, WV

ATTACHMENT C

INSTALLATION & START UP SCHEDULE

ATTACHMENT C

INSTALLATION & START UP SCHEDULE

JF Allen Company proposes to add a RAP system (reclaim asphalt process) to the existing site. This also will include a portable crusher and screen for this system as well. Additionally, two new silos along with two new Asphalt Cement Storage and one new Cold Aggregate Bin are proposed for this site. JF Allen Company is hopeful to be granted permission to begin construction as necessary for the proposed modification of this site in order to be ready for the next paving season. A preliminary start date of August 2016 is proposed at this time or as soon as the permit allows for these modifications to begin.

ATTACHMENT D

REGULATORY DISCUSSION

ATTACHMENT D

REGULATORY DISCUSSION

There is no change in the regulations to which this facility is subject to as a result of the proposed modifications.

ATTACHMENT E

PLOT PLAN

This document was too large to scan. If interested in viewing please contact: depfoia@wv.gov or

West Virginia Department of Environmental Protection Public Information Office

FOIA Request

601 57th St. S.E.

Charleston, WV 25304.

The fax number is 304-926-0447.

Thank you.

dep

west virginia department of environmental protection

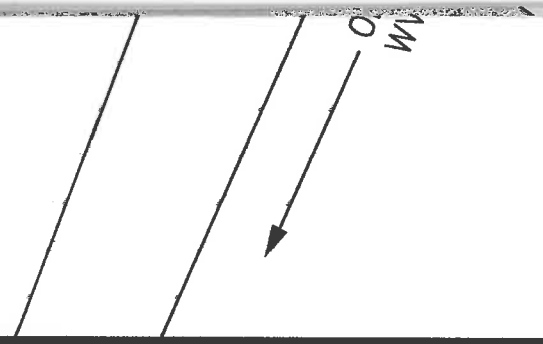

J.F. ALLEN COMPANY

PERMIT No. R13-2109	DAQ PLANT ID No. 033-00127

McALPIN SITE
PLOT PLAN

SCALE: 1"=30'	CREATED: JANUARY, 2016	REVISED: JUNE, 2016
MFN: 14.524	CREATED BY: PC	REVISED BY: PC

PREPARED BY:
SURVEYOR AND ASSOCIATES, INC.
KINGWOOD, WEST VIRGINIA

CLAY DISTRICT
HARRISON COUNTY
WEST VIRGINIA
U.S.G.S. QUADRANGLES:

MAP DATUM: AERIAL MAPPING &
USGS 7.5 MINUTE QUADRANGLE
PHOTO REVISED 1996
CLARKSBURG & ROSEMONT, WV

ATTACHMENT F

DETAILED PROCESS FLOW DIAGRAM

This document was too large to scan. If interested in viewing please contact: depfoia@wv.gov or

West Virginia Department of Environmental Protection Public Information Office

FOIA Request

601 57th St. S.E.

Charleston, WV 25304.

The fax number is 304-926-0447.

Thank you.

dep

west virginia department of environmental protection

J.F. ALLEN COMPANY

PERMIT No. R13-2109	DAQ PLANT ID No. 033-00127

McALPIN SITE

PROCESS FLOW DIAGRAM

SCALE: SCHEMATIC	CREATED: JANUARY, 2016	REVISED: JUNE, 2016
MFN: 14.524	CREATED BY: PC	REVISED BY: PC

PREPARED BY:
SURVEYOR AND ASSOCIATES, INC.
KINGWOOD, WEST VIRGINIA

CLAY DISTRICT
HARRISON COUNTY
WEST VIRGINIA
U.S.G.S. QUADRANGLES:

MAP DATUM: AERIAL MAPPING &
USGS 7.5 MINUTE QUADRANGLE
PHOTO REVISED 1996
CLARKSBURG & ROSEMONT, WV

ATTACHMENT G

PROCESS DESCRIPTION

ATTACHMENT G

PROCESS DESCRIPTION

JF Allen Company proposes modifications to its existing Hot Mix Asphalt Plant near McAlpin, WV. This site may have the potential to process up to 600,000 tons/year, although in recent years it has produced less than 100,000 tons/year. Also, JF Allen Company proposes to include a RAP (reclaim asphalt process) including a portable crusher and screen as needed for this system. This will have the potential to process up to 25,000 tons/year. Currently, all materials (Limestone Aggregates) brought onto the site have already been through the crushing and screening process at the mine site. The Reclaimed Asphalt Material may arrive at the site in need of crushing and screening. If so, then this material will placed in the stockpile areas as shown on the Plot Plan drawing. From OSP-16, OSP-17, and OSP-18 the material will be brought to the cold aggregate bins before being loaded via a conveyor to a collar that will dump the material into the drum. The material will be processed in the Hot Mix Asphalt Plant before being loaded out onto trucks that are transporting the material from the site.

ATTACHMENT I

EMISSION UNITS TABLE

Attachment I

Emission Units Table

(includes all emission units and air pollution control devices that will be part of this permit application review, regardless of permitting status)

Emission Unit ID[1]	Emission Point ID[2]	Emission Unit Description	Year Installed/ Modified	Design Capacity	Type[3] and Date of Change	Control Device[4]
C1	C1	Portable Crusher	2016	166 tph	New	PE
S1	S1	Double Deck Screen	1997	300 tph	Existing	PE
S2	S2	Deister Portable Screen	2016	90 tph	New	PE
BC1	BC1	Belt Conveyor	1997	300 tph	Existing	N
BC2	BC2	Belt Conveyor	1997	300 tph	Existing	N
BC3	BC3	Belt Conveyor	1997	300 tph	Existing	FE
BC4	BC4	Belt Conveyor	2016	90 tph	New	FE
BC5	BC5	Belt Conveyor	2016	90 tph	New	FE
BC6	BC6	Belt Conveyor	2016	90 tph	New	FE

[1] For Emission Units (or Sources) use the following numbering system:1S, 2S, 3S,... or other appropriate designation.
[2] For Emission Points use the following numbering system:1E, 2E, 3E, ... or other appropriate designation.
[3] New, modification, removal
[4] For Control Devices use the following numbering system: 1C, 2C, 3C,... or other appropriate designation.

ATTACHMENT J

EMISSION POINTS DATA SUMMARY SHEET

Attachment J
EMISSION POINTS DATA SUMMARY SHEET

Table 1: Emissions Data

Emission Point ID No. *(Must match Emission Units Table & Plot Plan)*	Emission Point Type[1]	Emission Unit Vented Through This Point *(Must match Emission Units Table & Plot Plan)*		Air Pollution Control Device *(Must match Emission Units Table & Plot Plan)*		Vent Time for Emission Unit *(chemical processes only)*		All Regulated Pollutants - Chemical Name/CAS[3] *(Speciate VOCs & HAPS)*	Maximum Potential Uncontrolled Emissions[4]		Maximum Potential Controlled Emissions[5]		Emission Form or Phase *(At exit conditions, Solid, Liquid or Gas/Vapor)*	Est. Method Used[6]	Emission Concentration[7] (ppmv or mg/m[4])
		ID No.	Source	ID No.	Device Type	Short Term[2]	Max (hr/yr)		lb/hr	ton/yr	lb/hr	ton/yr			
Transfer Points TP1 – TP38	NA	TP1 through TP38	Transfer Points	Varies	Varies	NA	NA	PM PM10	15.942 7.54	10.067 4.761	11.679 5.524	5.804 2.745	Solid	EE	NA
Open Stockpiles	NA	OS1 through OS18	Open Stockpiles	Varies	Varies	NA	NA	PM PM10	0.376 0.177	1.649 0.775	0.211 0.099	0.925 0.435	Solid	EE	NA
Vehicular Activity	NA	VA 1 through 4	VA	Varies	Water Spray	NA	NA	PM PM10	531.84 103.77	99.73 19.46	168.52 32.88	38.99 7.61	Solid	EE	NA
Screens	NA	S1 S2	S1 S2	Varies	Varies	NA	NA	PM PM10	9.750 3.393	1.250 0.435	1.950 0.679	0.250 0.087	Solid	EE	NA
Crushing	NA	C1	C1	Varies	Varies	NA	NA	PM PM10	0.332 0.166	0.090 0.045	0.066 0.033	0.018 0.009	Solid	EE	NA

The EMISSION POINTS DATA SUMMARY SHEET provides a summation of emissions by emission unit. Note that uncaptured process emission unit emissions are not typically considered to be fugitive and must be accounted for on the appropriate EMISSIONS UNIT DATA SHEET and on the EMISSION POINTS DATA SUMMARY SHEET. Please note that total emissions from the source are equal to all vented emissions, all fugitive emissions, plus all other emissions (e.g. uncaptured emissions). Please complete the FUGITIVE EMISSIONS DATA SUMMARY SHEET for fugitive emission activities.

[1] Please add descriptors such as upward vertical stack, downward vertical stack, horizontal stack, relief vent, rain cap, etc.

[2] Indicate by "C" if venting is continuous. Otherwise, specify the average short-term venting rate with units, for intermittent venting (ie., 15 min/hr). Indicate as many rates as needed to clarify frequency of venting (e.g., 5 min/day, 2 days/wk).

[3] List all regulated air pollutants. Speciate VOCs, including all HAPs. Follow chemical name with Chemical Abstracts Service (CAS) number. **LIST** Acids, CO, CS_2, VOCs, H_2S, Inorganics, Lead, Organics, O_3, NO, NO_2, SO_2, SO_3, all applicable Greenhouse Gases (including CO_2 and methane), etc. **DO NOT LIST** H_2, H_2O, N_2, O_2, and Noble Gases.

[4] Give maximum potential emission rate with no control equipment operating. If emissions occur for less than 1 hr, then record emissions per batch in minutes (e.g. 5 lb VOC/20 minute batch).

[5] Give maximum potential emission rate with proposed control equipment operating. If emissions occur for less than 1 hr, then record emissions per batch in minutes (e.g. 5 lb VOC/20 minute batch).

[6] Indicate method used to determine emission rate as follows: MB = material balance; ST = stack test (give date of test); EE = engineering estimate; O = other (specify).

[7] Provide for all pollutant emissions. Typically, the units of parts per million by volume (ppmv) are used. If the emission is a mineral acid (sulfuric, nitric, hydrochloric or phosphoric) use units of milligram per dry cubic meter (mg/m^3) at standard conditions (68 °F and 29.92 inches Hg) (see 45CSR7). If the pollutant is SO_2, use units of ppmv (See 45CSR10).

Attachment J
EMISSION POINTS DATA SUMMARY SHEET

Table 2: Release Parameter Data								
Emission Point ID No. *(Must match Emission Units Table)*	Inner Diameter (ft.)	Exit Gas			Emission Point Elevation (ft)		UTM Coordinates (km)	
		Temp. (°F)	Volumetric Flow [1] (acfm) *at operating conditions*	Velocity (fps)	Ground Level *(Height above mean sea level)*	Stack Height [2] *(Release height of emissions above ground level)*	Northing	Easting
NOT APPLICABLE								

[1] Give at operating conditions. Include inerts.
[2] Release height of emissions above ground level.

Attachment J
EMISSION POINTS DATA SUMMARY SHEET

Table 1: Emissions Data															
Emission Point ID No. *(Must match Emission Units Table & Plot Plan)*	Emission Point Type[1]	Emission Unit Vented Through This Point *(Must match Emission Units Table & Plot Plan)*		Air Pollution Control Device *(Must match Emission Units Table & Plot Plan)*		Vent Time for Emission Unit *(chemical processes only)*		All Regulated Pollutants - Chemical Name/CAS[3] *(Speciate VOCs & HAPS)*	Maximum Potential Uncontrolled Emissions[4] Δ		Maximum Potential Controlled Emissions[5] Δ		Emission Form or Phase *(At exit conditions, Solid, Liquid or Gas/Vapor)*	Est. Method Used[6]	Emission Concentration[7] (ppmv or mg/m[4])
		ID No.	Source	ID No.	Device Type	Short Term[2]	Max (hr/yr)		lb/hr	ton/yr	lb/hr	ton/yr			
Transfer Points TP1 – TP38	**NA**	**TP1 through TP38**	**Transfer Points**	**Varies**	**Varies**	**NA**	**NA**	**PM** **PM10**	**7.892** **3.733**	**3.245** **1.535**	**4.239** **2.005**	**2.126** **1.006**	**Solid**	**EE**	**NA**
Open Stockpiles	**NA**	**OS1 through OS18**	**Open Stockpiles**	**Varies**	**Varies**	**NA**	**NA**	**PM** **PM10**	**0.376** **0.177**	**1.649** **0.775**	**0.211** **0.099**	**0.925** **0.435**	**Solid**	**EE**	**NA**
Vehicular Activity	**NA**	**VA 1 through 4**	**VA**	**Varies**	**Water Spray**	**NA**	**NA**	**PM** **PM10**	**74.49** **14.53**	**37.71** **7.36**	**25.71** **5.02**	**14.83** **2.89**	**Solid**	**EE**	**NA**
Screens	**NA**	**S1** **S2** **S3**	**S1** **S2** **S3**	**Varies**	**Varies**	**NA**	**NA**	**PM** **PM10**	**15.75** **5.481**	**1.563** **0.544**	**3.15** **1.096**	**0.313** **0.109**	**Solid**	**EE**	**NA**
Crushing	**NA**	**C1**	**C1**	**Varies**	**Varies**	**NA**	**NA**	**PM** **PM10**	**0.332** **0.166**	**0.090** **0.045**	**0.066** **0.033**	**0.018** **0.009**	**Solid**	**EE**	**NA**

The EMISSION POINTS DATA SUMMARY SHEET provides a summation of emissions by emission unit. Note that uncaptured process emission unit emissions are not typically considered to be fugitive and must be accounted for on the appropriate EMISSIONS UNIT DATA SHEET and on the EMISSION POINTS DATA SUMMARY SHEET. Please note that total emissions from the source are equal to all vented emissions, all fugitive emissions, plus all other emissions (e.g. uncaptured emissions). Please complete the FUGITIVE EMISSIONS DATA SUMMARY SHEET for fugitive emission activities.

[1] Please add descriptors such as upward vertical stack, downward vertical stack, horizontal stack, relief vent, rain cap, etc.

[2] Indicate by "C" if venting is continuous. Otherwise, specify the average short-term venting rate with units, for intermittent venting (ie., 15 min/hr). Indicate as many rates as needed to clarify frequency of venting (e.g., 5 min/day, 2 days/wk).

[3] List all regulated air pollutants. Speciate VOCs, including all HAPs. Follow chemical name with Chemical Abstracts Service (CAS) number. **LIST** Acids, CO, CS_2, VOCs, H_2S, Inorganics, Lead, Organics, O_3, NO, NO_2, SO_2, SO_3, all applicable Greenhouse Gases (including CO_2 and methane), etc. **DO NOT LIST** H_2, H_2O, N_2, O_2, and Noble Gases.

[4] Give maximum potential emission rate with no control equipment operating. If emissions occur for less than 1 hr, then record emissions per batch in minutes (e.g. 5 lb VOC/20 minute batch).

[5] Give maximum potential emission rate with proposed control equipment operating. If emissions occur for less than 1 hr, then record emissions per batch in minutes (e.g. 5 lb VOC/20 minute batch).

[6] Indicate method used to determine emission rate as follows: MB = material balance; ST = stack test (give date of test); EE = engineering estimate; O = other (specify).

[7] Provide for all pollutant emissions. Typically, the units of parts per million by volume (ppmv) are used. If the emission is a mineral acid (sulfuric, nitric, hydrochloric or phosphoric) use units of milligram per dry cubic meter (mg/m^3) at standard conditions (68 °F and 29.92 inches Hg) (see 45CSR7). If the pollutant is SO_2, use units of ppmv (See 45CSR10).

Attachment J
EMISSION POINTS DATA SUMMARY SHEET

Table 2: Release Parameter Data								
Emission Point ID No. *(Must match Emission Units Table)*	Inner Diameter (ft.)	Exit Gas			Emission Point Elevation (ft)		UTM Coordinates (km)	
		Temp. (°F)	Volumetric Flow [1] (acfm) *at operating conditions*	Velocity (fps)	Ground Level *(Height above mean sea level)*	Stack Height [2] *(Release height of emissions above ground level)*	Northing	Easting
NOT APPLICABLE								

[1] Give at operating conditions. Include inerts.
[2] Release height of emissions above ground level.

ATTACHMENT K

FUGITIVE EMISSIONS DATA SUMMARY SHEET

Attachment K

FUGITIVE EMISSIONS DATA SUMMARY SHEET

The FUGITIVE EMISSIONS SUMMARY SHEET provides a summation of fugitive emissions. Fugitive emissions are those emissions which could not reasonably pass through a stack, chimney, vent or other functionally equivalent opening. Note that uncaptured process emissions are not typically considered to be fugitive, and must be accounted for on the appropriate EMISSIONS UNIT DATA SHEET and on the EMISSION POINTS DATA SUMMARY SHEET.

Please note that total emissions from the source are equal to all vented emissions, all fugitive emissions, plus all other emissions (e.g. uncaptured emissions).

APPLICATION FORMS CHECKLIST - FUGITIVE EMISSIONS
1.) Will there be haul road activities? ☒ Yes ☐ No ☒ If YES, then complete the HAUL ROAD EMISSIONS UNIT DATA SHEET.
2.) Will there be Storage Piles? ☒ Yes ☐ No ☒ If YES, complete Table 1 of the NONMETALLIC MINERALS PROCESSING EMISSIONS UNIT DATA SHEET.
3.) Will there be Liquid Loading/Unloading Operations? ☐ Yes ☒ No ☐ If YES, complete the BULK LIQUID TRANSFER OPERATIONS EMISSIONS UNIT DATA SHEET.
4.) Will there be emissions of air pollutants from Wastewater Treatment Evaporation? ☐ Yes ☒ No ☐ If YES, complete the GENERAL EMISSIONS UNIT DATA SHEET.
5.) Will there be Equipment Leaks (e.g. leaks from pumps, compressors, in-line process valves, pressure relief devices, open-ended valves, sampling connections, flanges, agitators, cooling towers, etc.)? ☐ Yes ☒ No ☐ If YES, complete the LEAK SOURCE DATA SHEET section of the CHEMICAL PROCESSES EMISSIONS UNIT DATA SHEET.
6.) Will there be General Clean-up VOC Operations? ☐ Yes ☒ No ☐ If YES, complete the GENERAL EMISSIONS UNIT DATA SHEET.
7.) Will there be any other activities that generate fugitive emissions? ☐ Yes ☒ No ☐ If YES, complete the GENERAL EMISSIONS UNIT DATA SHEET or the most appropriate form.
If you answered "NO" to all of the items above, it is not necessary to complete the following table, "Fugitive Emissions Summary."

Revision 2/11

FUGITIVE EMISSIONS SUMMARY	All Regulated Pollutants - Chemical Name/CAS [1]	Maximum Potential Uncontrolled Emissions [2]		Maximum Potential Controlled Emissions [3]		Est. Method Used [4]
		lb/hr	ton/yr	lb/hr	ton/yr	
Unpaved Haul Roads	Not Applicable					
Haul Road/Road Dust Emissions Paved Haul Roads	TSP PM10	531.84 103.77	99.73 19.46	168.52 32.88	38.99 7.61	EE
Storage Pile Emissions	TSP PM10	0.376 0.177	1.649 0.775	0.211 0.099	0.925 0.435	EE
Loading/Unloading Operations	Not Applicable					
Wastewater Treatment Evaporation & Operations	Not Applicable					
Equipment Leaks	Not Applicable					
General Clean-up VOC Emissions	Not Applicable					
Other	Not Applicable					

[1] List all regulated air pollutants. Speciate VOCs, including all HAPs. Follow chemical name with Chemical Abstracts Service (CAS) number. LIST Acids, CO, CS_2, VOCs, H_2S, Inorganics, Lead, Organics, O_3, NO, NO_2, SO_2, SO_3, all applicable Greenhouse Gases (including CO_2 and methane), etc. DO NOT LIST H_2, H_2O, N_2, O_2, and Noble Gases.

[2] Give rate with no control equipment operating. If emissions occur for less than 1 hr, then record emissions per batch in minutes (e.g. 5 lb VOC/20 minute batch).

[3] Give rate with proposed control equipment operating. If emissions occur for less than 1 hr, then record emissions per batch in minutes (e.g. 5 lb VOC/20 minute batch).

[4] Indicate method used to determine emission rate as follows: MB = material balance; ST = stack test (give date of test); EE = engineering estimate; O = other (specify).

Attachment K

FUGITIVE EMISSIONS DATA SUMMARY SHEET

The FUGITIVE EMISSIONS SUMMARY SHEET provides a summation of fugitive emissions. Fugitive emissions are those emissions which could not reasonably pass through a stack, chimney, vent or other functionally equivalent opening. Note that uncaptured process emissions are not typically considered to be fugitive, and must be accounted for on the appropriate EMISSIONS UNIT DATA SHEET and on the EMISSION POINTS DATA SUMMARY SHEET.

Please note that total emissions from the source are equal to all vented emissions, all fugitive emissions, plus all other emissions (e.g. uncaptured emissions).

APPLICATION FORMS CHECKLIST - FUGITIVE EMISSIONS
1.) Will there be haul road activities? ☒ Yes ☐ No ☒ If YES, then complete the HAUL ROAD EMISSIONS UNIT DATA SHEET.
2.) Will there be Storage Piles? ☒ Yes ☐ No ☒ If YES, complete Table 1 of the NONMETALLIC MINERALS PROCESSING EMISSIONS UNIT DATA SHEET.
3.) Will there be Liquid Loading/Unloading Operations? ☐ Yes ☒ No ☐ If YES, complete the BULK LIQUID TRANSFER OPERATIONS EMISSIONS UNIT DATA SHEET.
4.) Will there be emissions of air pollutants from Wastewater Treatment Evaporation? ☐ Yes ☒ No ☐ If YES, complete the GENERAL EMISSIONS UNIT DATA SHEET.
5.) Will there be Equipment Leaks (e.g. leaks from pumps, compressors, in-line process valves, pressure relief devices, open-ended valves, sampling connections, flanges, agitators, cooling towers, etc.)? ☐ Yes ☒ No ☐ If YES, complete the LEAK SOURCE DATA SHEET section of the CHEMICAL PROCESSES EMISSIONS UNIT DATA SHEET.
6.) Will there be General Clean-up VOC Operations? ☐ Yes ☒ No ☐ If YES, complete the GENERAL EMISSIONS UNIT DATA SHEET.
7.) Will there be any other activities that generate fugitive emissions? ☐ Yes ☒ No ☐ If YES, complete the GENERAL EMISSIONS UNIT DATA SHEET or the most appropriate form.
If you answered "NO" to all of the items above, it is not necessary to complete the following table, "Fugitive Emissions Summary."

FUGITIVE EMISSIONS SUMMARY	All Regulated Pollutants - Chemical Name/CAS [1]	Maximum Potential Uncontrolled Emissions [2]		Maximum Potential Controlled Emissions [3]		Est. Method Used [4]
		lb/hr Δ	ton/yr Δ	lb/hr Δ	ton/yr Δ	
Unpaved Haul Roads	Not Applicable					
Haul Road/Road Dust Emissions Paved Haul Roads	TSP PM10	74.49 14.53	37.71 7.36	25.71 5.02	14.83 2.89	EE
Storage Pile Emissions	TSP PM10	0.376 0.177	1.649 0.775	0.211 0.099	0.925 0.435	EE
Loading/Unloading Operations	Not Applicable					
Wastewater Treatment Evaporation & Operations	Not Applicable					
Equipment Leaks	Not Applicable					
General Clean-up VOC Emissions	Not Applicable					
Other	Not Applicable					

[1] List all regulated air pollutants. Speciate VOCs, including all HAPs. Follow chemical name with Chemical Abstracts Service (CAS) number. LIST Acids, CO, CS_2, VOCs, H_2S, Inorganics, Lead, Organics, O_3, NO, NO_2, SO_2, SO_3, all applicable Greenhouse Gases (including CO_2 and methane), etc. DO NOT LIST H_2, H_2O, N_2, O_2, and Noble Gases.

[2] Give rate with no control equipment operating. If emissions occur for less than 1 hr, then record emissions per batch in minutes (e.g. 5 lb VOC/20 minute batch).

[3] Give rate with proposed control equipment operating. If emissions occur for less than 1 hr, then record emissions per batch in minutes (e.g. 5 lb VOC/20 minute batch).

[4] Indicate method used to determine emission rate as follows: MB = material balance; ST = stack test (give date of test); EE = engineering estimate; O = other (specify).

ATTACHMENT L

EMISSIONS UNIT DATA SHEETS

Attachment L
FUGITIVE EMISSIONS FROM UNPAVED HAULROADS

UNPAVED HAULROADS (including all equipment traffic involved in process, haul trucks, endloaders, etc.)

		PM	PM-10
k =	Particle size multiplier	0.80	0.36
s =	Silt content of road surface material (%)	9	9
p =	Number of days per year with precipitation >0.01 in.	170	170

Item Number	Description	Number of Wheels	Mean Vehicle Weight (tons)	Mean Vehicle Speed (mph)	Miles per Trip	Maximum Trips per Hour	Maximum Trips per Year	Control Device ID Number	Control Efficiency (%)
1									
2									
3									
4									
5									
6									
7									
8									

Source: *AP-42 Fifth Edition – 13.2.2 Unpaved Roads*

$E = k \times 5.9 \times (s \div 12) \times (S \div 30) \times (W \div 3)^{0.7} \times (w \div 4)^{0.5} \times ((365 - p) \div 365) =$ lb/Vehicle Mile Traveled (VMT)

Where:

		PM	PM-10
k =	Particle size multiplier	0.80	0.36
s =	Silt content of road surface material (%)	9	9
S =	Mean vehicle speed (mph)		
W =	Mean vehicle weight (tons)		
w =	Mean number of wheels per vehicle		
p =	Number of days per year with precipitation >0.01 in.	170	170

For lb/hr: [lb ÷ VMT] × [VMT ÷ trip] × [Trips ÷ Hour] = lb/hr

For TPY: [lb ÷ VMT] × [VMT ÷ trip] × [Trips ÷ Hour] × [Ton ÷ 2000 lb] = Tons/year

SUMMARY OF UNPAVED HAULROAD EMISSIONS

Item No.	PM				PM-10			
	Uncontrolled		Controlled		Uncontrolled		Controlled	
	lb/hr	TPY	lb/hr	TPY	lb/hr	TPY	lb/hr	TPY
1								
2								
3								
4								
5								
6								
7								
8								
TOTALS								

Revision 03/2007

FUGITIVE EMISSIONS FROM PAVED HAULROADS

INDUSTRIAL PAVED HAULROADS (including all equipment traffic involved in process, haul trucks, endloaders, etc.)

I =	Industrial augmentation factor (dimensionless)	
n =	Number of traffic lanes	
s =	Surface material silt content (%)	
L =	Surface dust loading (lb/mile)	

Item Number	Description	Mean Vehicle Weight (tons)	Miles per Trip	Maximum Trips per Hour	Maximum Trips per Year	Control Device ID Number	Control Efficiency (%)
1	18 Wheel Truck Tractor	44	0.17	23	7,708	WS1	70
2	Endloader	32.8	0.02	24	48,583	---	0
3	14 Wheel Truck TRI	38.5	0.17	30	10,020	WS1	70
4	18 Wheel Truck Quad	40.1	0.17	30	10,020	WS1	70
5							
6							
7							
8							

Source: *AP-42 Fifth Edition – 11.2.6 Industrial Paved Roads*

$E = 0.077 \times I \times (4 + n) \times (s \div 10) \times (L \div 1000) \times (W + 3)^{0.7} =$ lb/Vehicle Mile Traveled (VMT)

Where:

I =	Industrial augmentation factor (dimensionless)	
n =	Number of traffic lanes	
s =	Surface meterial silt content (%)	
L =	Surface dust loading (lb/mile)	
W =	Average vehicle weight (tons)	

For lb/hr: [lb ÷ VMT] × [VMT ÷ trip] × [Trips ÷ Hour] = lb/hr

For TPY: [lb ÷ VMT] × [VMT ÷ trip] × [Trips ÷ Hour] × [Ton ÷ 2000 lb] = Tons/year

SUMMARY OF PAVED HAULROAD EMISSIONS

Item No.	Uncontrolled		Controlled	
	lb/hr	TPY	lb/hr	TPY
1	162.08	27.16	48.62	8.15
2	12.81	12.96	12.81	12.96
3	173.03	28.90	51.91	8.67
4	183.93	30.72	55.18	9.21
5				
6				
7				
8				
TOTALS	531.81	99.73	168.52	38.99

Revision 03/2007

FUGITIVE EMISSIONS FROM PAVED HAULROADS

INDUSTRIAL PAVED HAULROADS (including all equipment traffic involved in process, haul trucks, endloaders, etc.)

I =	Industrial augmentation factor (dimensionless)	
n =	Number of traffic lanes	
s =	Surface material silt content (%)	
L =	Surface dust loading (lb/mile)	

Item Number	Description	Mean Vehicle Weight (tons)	Miles per Trip	Maximum Trips per Hour	Maximum Trips per Year	Control Device ID Number	Control Efficiency (%)
1	18 Wheel Truck Tractor	44	0.41	2	1,658	WS1	70
2	Endloader	32.8	0.02	9	18,850	---	0
3	14 Wheel Truck TRI	38.5	0.17	3	3,125	WS1	70
4	18 Wheel Truck Quad	40.1	0.17	3	3,125	WS1	70
5							
6							
7							
8							

Source: *AP-42 Fifth Edition – 11.2.6 Industrial Paved Roads*

$E = 0.077 \times I \times (4 \div n) \times (s \div 10) \times (L \div 1000) \times (W \div 3)^{0.7} =$ lb/Vehicle Mile Traveled (VMT)

Where:

I =	Industrial augmentation factor (dimensionless)	
n =	Number of traffic lanes	
s =	Surface meterial silt content (%)	
L =	Surface dust loading (lb/mile)	
W =	Average vehicle weight (tons)	

For lb/hr: [lb ÷ VMT] × [VMT ÷ trip] × [Trips ÷ Hour] = lb/hr

For TPY: [lb ÷ VMT] × [VMT ÷ trip] × [Trips ÷ Hour] × [Ton ÷ 2000 lb] = Tons/year

SUMMARY OF PAVED HAULROAD EMISSIONS

Item No.	Uncontrolled		Controlled	
	lb/hr	TPY	lb/hr	TPY
1	33.99	14.09	10.20	4.23
2	4.80	5.03	4.80	5.03
3	17.30	9.01	5.19	2.70
4	18.39	9.58	5.52	2.87
5				
6				
7				
8				
TOTALS	74.49	37.71	25.71	14.83

Affected Source Sheet

Source Specific Emissions Data: Solid Materials Sizing, Handling and Storage Facilities

Required Information Regarding Dust Control Equipment Measures

1. If water or chemical sprays are to be used on conveyors, transfer points, stockpiles, etc... for dust control, the location of all spray bars or spray systems should be shown on the plot plans and/or line drawings. The following information should be provided for each spray system:

   a. Design water flow through spray bar
   b. Type and amount of chemicals used and the mix ratio of chemical to water used at the sprays.
   c. Methods employed to winterize sprays (e.g. keep sprays from freezing and becoming inoperable during cold weather)

2. A detailed written description should be submitted of dust control measures/programs that will be employed on haul roads and in areas of vehicle activity around material stockpiled. The haulways and areas to be treated should be shown by shading or similar description on the plant plan. The following points should be specifically addressed:

   a. Equipment (e.g. water trucks, fixed spray bars, wheel and truck underbody washers, etc...) that will be used in this dust control program.
   b. Frequency of application of water and chemical to roads and stockpile areas during dry periods.
   c. Amount of chemical suppressants to be used, if applicable, in pounds or gallons per square yard of surface to be treated.
   d. Type of haulroad or haulway surface(s) that will be maintained (e.g. coarse gravel, reddog, etc...)
   e. Approximate maximum length of haulroads (miles or feet).
   f. Maximum daily truck traffic on haulroads (number of trucks).

3. If full or partial enclosures are to be used to minimize dust entrainment, a drawing of each such enclosure should be submitted (for example at truck dump bins, breakers, conveyor transfer points).

4. If particulate control devices such as baghouses or scrubbers are to be used, complete an appropriate <u>Air Pollution Control Device Sheet</u> and furnish a drawing showing details of enclosures and ductwork associated with these control systems.

AFFECTED SOURCE SHEET

Source Specific Emissions Data: Solid Materials Sizing, Handling, and Storage Facilities

Plot Plan(s) and Line Drawing(s)

a. Finish the plot plan(s) of the plant area which contains sufficient detail to show the scaled layout of the equipment involved in each materials handling system (e.g. conveyors, transfer points, crushers, screens, bins, stockpiles, truck dump bins, etc...). Show equipment or buildings described in other sections of this application on the plot plan as appropriate. The guidelines for Plot Plans should be followed to the extent possible.

b. Furnish the line drawing(s) or schematic(s) showing each component or facet of each materials handling system (e.g. conveyors, transfer points, stockpiles, crushers, screens, bins etc...). Show process equipment described in other sections of this application as needed for clarity.

c. On the line drawing(s) or schematic(s) furnished in accordance with item (b) assign an ID number to each conveyor, transfer point (including truck, barge and rail car loading/unloading etc...), storage structure, stockpile, crusher, and screening unit. If any equipment is shown on the line drawing(s) which was described in other sections of this application, use the ID numbers assigned to the equipment in those other sections and indicate equipment name or type (e.g. rotary dryer, vertical kiln etc...)

d. To the extent possible, note the numbers assigned for equipment and storage facilities as per item (c) on the Plot Plans(s).

e. The assigned ID numbers for equipment and transfer points must be used to complete Tables 1, 2, and 3 following.

TABLE 1: Affected Storage Activity

ID Number	OS1	OS2	OS3	OS4	OS5	OS6
Affected Source Name	OS1	OS2	OS3	OS4	OS5	OS6
Type Storage[1]	OS	OS	OS	OS	OS	OS
Material Stored	Sized Limestone (4)	Sized Limestone (4)	Sized Limestone (57)	Sized Limestone (57)	Sized Limestone (67)	Sized Limestone (57)
Typical Moisture Content %	2%	2%	2%	2%	2%	2%
Avg % of material passing 200 mesh sieve	2	2	2	2	2	2
Maximum Total Yearly Throughput in storage (tons)	45,000	45,000	22,500	22,500	22,500	22,500
Maximum Quantity of Material in Storage[2]	5,000	5,000	5,000	5,000	5,000	5,000
Maximum Stockpile Base Area (sq. ft.)	5,000	5,000	10,000	10,000	10,000	10,000
Maximum Stockpile Height (ft)	25	25	25	25	25	25
Type dust controls during storage[3]	PE	PE	PE	PE	PE	PE
Method of material load-in to bin or stockpile[4]	TD	TD	TD	TD	TD	TD
Type dust controls during load-in[5]	MD	MD	MD	MD	MD	MD
Method of material load-out to bin or stockpile[4]	FE	FE	FE	FE	FE	FE
Type dust controls during load out[5]	MD	MD	MD	MD	MD	MD

TABLE 1: Affected Storage Activity

ID Number	OS7	OS8	OS9	OS10	OS11	OS12
Affected Source Name	OS7	OS8	OS9	OS10	OS11	OS12
Type Storage[1]	OS	OS	OS	OS	OS	OS
Material Stored	Sized Limestone (8)	Sized Limestone (8)	Sized Limestone (9)	Sized Limestone (9)	Sized Limestone (1½)	Sand
Typical Moisture Content %	2%	2%	2%	2%	2%	2%
Avg % of material passing 200 mesh sieve	2	2	2	2	3	6
Maximum Total Yearly Throughput in storage (tons)	45,000	45,000	45,000	45,000	40,000	75,000
Maximum Quantity of Material in Storage[2]	5,000	5,000	5,000	5,000	5,000	5,000
Maximum Stockpile Base Area (sq. ft.)	15,000	15,000	12,000	12,000	10,000	4,550
Maximum Stockpile Height (ft)	25	25	25	25	25	25
Type dust controls during storage[3]	PE	PE	PE	PE	PE	PE
Method of material load-in to bin or stockpile[4]	TD	TD	TD	TD	TD	TD
Type dust controls during load-in[5]	MD	MD	MD	MD	MD	MD
Method of material load-out to bin or stockpile[4]	FE	FE	FE	FE	FE	FE
Type dust controls during load out[5]	MD	MD	MD	MD	MD	MD

TABLE 1: Affected Storage Activity

ID Number	OS13	OS14	OS15	OS16	OS17	OS18
Affected Source Name	OS7	OS8	OS9	OS10	OS11	OS12
Type Storage[1]	OS	OS	OS	OS	OS	OS
Material Stored	Sand	Sized Limestone (1)	Sized Limestone (3)	Reclaimed Asphalt Material	Reclaimed Asphalt Material	Reclaimed Asphalt Material (crushed)
Typical Moisture Content %	2%	2%	2%	2%	2%	2%
Avg % of material passing 200 mesh sieve	6	2	3	6	6	6
Maximum Total Yearly Throughput in storage (tons)	75,000	10,000	10,000	30,000	30,000	30,000
Maximum Quantity of Material in Storage[2]	5,000	5,000	5,000	5,000	5,000	5,000
Maximum Stockpile Base Area (sq. ft.)	4,550	6,000	6,000	3,000	6,000	3,000
Maximum Stockpile Height (ft)	25	25	25	25	25	25
Type dust controls during storage[3]	PE	PE	N	N	N	N
Method of material load-in to bin or stockpile[4]	TD	TD	TD	TD	TD	TD
Type dust controls during load-in[5]	MD	MD	MD	MD	MD	MD
Method of material load-out to bin or stockpile[4]	FE	FE	FE	FE	FE	FE
Type dust controls during load out[5]	MD	MD	MD	MD	MD	MD

TABLE 1: Affected Storage Activity

ID Number	OS1	OS2	OS3	OS4	OS5	OS6
Affected Source Name	OS1	OS2	OS3	OS4	OS5	OS6
Type Storage[1]	OS	OS	OS	OS	OS	OS
Material Stored	Sized Limestone (4)	Sized Limestone (4)	Sized Limestone (57)	Sized Limestone (57)	Sized Limestone (67)	Sized Limestone (57)
Typical Moisture Content %	2%	2%	2%	2%	2%	2%
Avg % of material passing 200 mesh sieve	2	2	2	2	2	2
Maximum Total Yearly Throughput in storage (tons) Δ	12,600	12,600	6,300	6,300	6,300	6,300
Maximum Quantity of Material in Storage[2]	5,000	5,000	5,000	5,000	5,000	5,000
Maximum Stockpile Base Area (sq. ft.)	5,000	5,000	10,000	10,000	10,000	10,000
Maximum Stockpile Height (ft)	25	25	25	25	25	25
Type dust controls during storage[3]	PE	PE	PE	PE	PE	PE
Method of material load-in to bin or stockpile[4]	TD	TD	TD	TD	TD	TD
Type dust controls during load-in[5]	MD	MD	MD	MD	MD	MD
Method of material load-out to bin or stockpile[4]	FE	FE	FE	FE	FE	FE
Type dust controls during load out[5]	MD	MD	MD	MD	MD	MD

TABLE 1: Affected Storage Activity

ID Number	OS7	OS8	OS9	OS10	OS11	OS12
Affected Source Name	OS7	OS8	OS9	OS10	OS11	OS12
Type Storage[1]	OS	OS	OS	OS	OS	OS
Material Stored	Sized Limestone (8)	Sized Limestone (8)	Sized Limestone (9)	Sized Limestone (9)	Sized Limestone (1½)	Sand
Typical Moisture Content %	2%	2%	2%	2%	2%	2%
Avg % of material passing 200 mesh sieve	2	2	2	2	3	6
Maximum Total Yearly Throughput in storage (tons) Δ	12,600	12,600	12,600	12,600	11,200	21,000
Maximum Quantity of Material in Storage[2]	5,000	5,000	5,000	5,000	5,000	5,000
Maximum Stockpile Base Area (sq. ft.)	15,000	15,000	12,000	12,000	10,000	4,550
Maximum Stockpile Height (ft)	25	25	25	25	25	25
Type dust controls during storage[3]	PE	PE	PE	PE	PE	PE
Method of material load-in to bin or stockpile[4]	TD	TD	TD	TD	TD	TD
Type dust controls during load-in[5]	MD	MD	MD	MD	MD	MD
Method of material load-out to bin or stockpile[4]	FE	FE	FE	FE	FE	FE
Type dust controls during load out[5]	MD	MD	MD	MD	MD	MD

TABLE 1: Affected Storage Activity

ID Number	OS13	OS14	OS15	OS16	OS17	OS18
Affected Source Name	OS7	OS8	OS9	OS10	OS11	OS12
Type Storage[1]	OS	OS	OS	OS	OS	OS
Material Stored	Sand	Sized Limestone (1)	Sized Limestone (3)	Reclaimed Asphalt Material	Reclaimed Asphalt Material	Reclaimed Asphalt Material (crushed)
Typical Moisture Content %	2%	2%	2%	2%	2%	2%
Avg % of material passing 200 mesh sieve	6	2	3	6	6	6
Maximum Total Yearly Throughput in storage (tons) Δ	21,000	10,000	10,000	30,000	30,000	30,000
Maximum Quantity of Material in Storage[2]	5,000	5,000	5,000	5,000	5,000	5,000
Maximum Stockpile Base Area (sq. ft.)	4,550	6,000	6,000	3,000	6,000	3,000
Maximum Stockpile Height (ft)	25	25	25	25	25	25
Type dust controls during storage[3]	PE	PE	N	N	N	N
Method of material load-in to bin or stockpile[4]	TD	TD	TD	TD	TD	TD
Type dust controls during load-in[5]	MD	MD	MD	MD	MD	MD
Method of material load-out to bin or stockpile[4]	FE	FE	FE	FE	FE	FE
Type dust controls during load out[5]	MD	MD	MD	MD	MD	MD

TABLE 2: Conveying and Transfer

ID Number	Type Conveyor or Transfer Point[6]	Material Handled (Note nominal size of material transferred)[7]	Material Conveying or Transfer Rate		Type Dust Control Measures[5]	Approximate Material Moisture Content (%)
			Maximum TPH	Maximum TPY		
Conveyor Belts						
BC1	BC	⅜"x2"	300	600,000	N	2
BC2	BC	⅜"x2"	45	90,000	N	2
BC3	BC	⅜"x2"	45	90,000	N	2
BC4	BC	⅜"x2"	45	90,000	N	2
BC5	BC	⅜"x2"	45	90,000	N	2
BC6	BC	⅜"x2"	45	90,000	N	2
Transfer Points						
TP1	TRK to STKPILE	⅜"x2"	135	45,000	N	2
TP2	TRK to STKPILE	⅜"x2"	135	45,000	N	2
TP3	TRK to STKPILE	⅜"x2"	67	22,500	N	2
TP4	TRK to STKPILE	⅜"x2"	67	22,500	N	2
TP5	TRK to STKPILE	⅜"x2"	67	22,500	N	2
TP6	TRK to STKPILE	⅜"x2"	67	22,500	N	2
TP7	TRK to STKPILE	⅜"x2"	135	45,000	N	2
TP8	TRK to STKPILE	⅜"x2"	135	45,000	N	2
TP9	TRK to STKPILE	⅜"x2"	135	45,000	N	2
TP10	TRK to STKPILE	⅜"x2"	135	45,000	N	2
TP11	TRK to STKPILE	⅜"x2"	75	40,000	N	2
TP12	TRK to STKPILE	⅜"x2"	225	75,000	N	2
TP13	TRK to STKPILE	⅜"x2"	225	75,000	N	2
TP14	TRK to STKPILE	⅜"x2"	30	10,000	N	2
TP15	TRK to STKPILE	⅜"x2"	30	10,000	N	2
TP16	TRK to STKPILE	⅜"x2"	90	30,000	N	2
TP17	TRK to STKPILE	⅜"x2"	90	30,000	N	2
TP18	TRK to STKPILE	⅜"x2"	90	30,000	N	2
TP19	ENDLOAD to CAB	⅜"x2"	45	90,000	N	2
TP20	ENDLOAD to CAB	⅜"x2"	45	90,000	N	2
TP21	ENDLOAD to CAB	⅜"x2"	45	90,000	N	2
TP22	ENDLOAD to CAB	⅜"x2"	45	90,000	N	2
TP23	ENDLOAD to CAB	⅜"x2"	37	75,000	N	2
TP24	ENDLOAD to CAB	⅜"x2"	37	75,000	N	2

TP25	ENDLOAD to RB	⅜"x2"	45	90,000	N	2
TP26	ENDLOAD to RB	⅜"x2"	45	90,000	N	2
TP27	CAB to BELT	⅜"x2"	300	600,000	N	2
TP28	BELT to SCREEN	⅜"x2"	300	600,000	N	2
TP29	SCREEN to BELT	⅜"x2"	45	90,000	PE	2
TP30	BIN to BELT	⅜"x2"	45	90,000	FE	2
TP31	BELT to SCREEN	⅜"x2"	45	90,000	FE	2
TP32	SCREEN to BELT	⅜"x2"	45	90,000	FE	2
TP33	BELT to BELT	⅜"x2"	45	90,000	FE	2
TP34	BELT to TRUCK	⅜"x2"	45	90,000	FE	2
TP35	BELT to SILO	⅜"x2"	300	600,000	FE	2
TP36	BELT to SILO	⅜"x2"	300	600,000	FE	2
TP37	BELT to SILO	⅜"x2"	300	600,000	FE	2
TP38	BELT to SILO	⅜"x2"	300	600,000	FE	2

TABLE 2: Conveying and Transfer

ID Number	Type Conveyor or Transfer Point[6]	Material Handled (Note nominal size of material transferred)[7]	Material Conveying or Transfer Rate		Type Dust Control Measures[5]	Approximate Material Moisture Content (%)
			Maximum TPH Δ	Maximum TPY Δ		
Conveyor Belts						
BC1	BC	⅜"x2"	300	600,000	N	2
BC2	BC	⅜"x2"	45	90,000	N	2
BC3	BC	⅜"x2"	45	90,000	N	2
BC4	BC	⅜"x2"	45	90,000	N	2
BC5	BC	⅜"x2"	45	90,000	N	2
BC6	BC	⅜"x2"	45	90,000	N	2
Transfer Points						
TP1	TRK to STKPILE	⅜"x2"	24	12,600	N	2
TP2	TRK to STKPILE	⅜"x2"	24	12,600	N	2
TP3	TRK to STKPILE	⅜"x2"	12	6,300	N	2
TP4	TRK to STKPILE	⅜"x2"	12	6,300	N	2
TP5	TRK to STKPILE	⅜"x2"	12	6,300	N	2
TP6	TRK to STKPILE	⅜"x2"	12	6,300	N	2
TP7	TRK to STKPILE	⅜"x2"	24	12,600	N	2
TP8	TRK to STKPILE	⅜"x2"	24	12,600	N	2
TP9	TRK to STKPILE	⅜"x2"	24	12,600	N	2
TP10	TRK to STKPILE	⅜"x2"	24	12,600	N	2
TP11	TRK to STKPILE	⅜"x2"	48	11,200	N	2
TP12	TRK to STKPILE	⅜"x2"	40	21,000	N	2
TP13	TRK to STKPILE	⅜"x2"	40	21,000	N	2
TP14	TRK to STKPILE	⅜"x2"	19	10,000	N	2
TP15	TRK to STKPILE	⅜"x2"	19	10,000	N	2
TP16	TRK to STKPILE	⅜"x2"	58	30,000	N	2
TP17	TRK to STKPILE	⅜"x2"	58	30,000	N	2
TP18	TRK to STKPILE	⅜"x2"	58	30,000	N	2
TP19	ENDLOAD to CAB	⅜"x2"	13	25,200	N	2
TP20	ENDLOAD to CAB	⅜"x2"	13	25,200	N	2
TP21	ENDLOAD to CAB	⅜"x2"	13	25,200	N	2
TP22	ENDLOAD to CAB	⅜"x2"	13	25,200	N	2
TP23	ENDLOAD to CAB	⅜"x2"	10	21,000	N	2
TP24	ENDLOAD to CAB	⅜"x2"	10	21,000	N	2

TP25	ENDLOAD to RB	⅜"x2"	45	90,000	N	2
TP26	ENDLOAD to RB	⅜"x2"	85	168,000	N	2
TP27	CAB to BELT	⅜"x2"	85	168,000	N	2
TP28	BELT to SCREEN	⅜"x2"	85	168,000	N	2
TP29	SCREEN to BELT	⅜"x2"	8	16,186	PE	2
TP30	BIN to BELT	⅜"x2"	8	16,186	FE	2
TP31	BELT to SCREEN	⅜"x2"	8	16,186	FE	2
TP32	SCREEN to BELT	⅜"x2"	8	16,186	FE	2
TP33	BELT to BELT	⅜"x2"	8	16,186	FE	2
TP34	BELT to TRUCK	⅜"x2"	8	16,186	FE	2
TP35	BELT to SILO	⅜"x2"	300	168,000	FE	2
TP36	BELT to SILO	⅜"x2"	300	168,000	FE	2
TP37	BELT to SILO	⅜"x2"	300	168,000	FE	2
TP38	BELT to SILO	⅜"x2"	300	168,000	FE	2

Table 3: Crushing and Screening

ID Number		C1	S1	S2	S3
Type Crusher or Screen[8]		Portable Crusher	Double Deck Screen	Deister Screen	Portable Screen
Material Sized		Reclaimed Asphalt Material	Limestone Aggregates	Reclaimed Asphalt Material	Reclaimed Asphalt Material
Maximum Material Throughput	Tons/hour	166	300	90	240
	Tons/year	90,000	75,000	25,000	25,000
Material sized from/to:[9]		⅜" x 2"	⅜" x 2"	⅜" x 2"	⅜" x 2"
Typical moisture content as crushed or screened %		2	2	2	2
Type dust control		PE	PE	PE	PE
Stack Parameters	height ft.	N/A	N/A	N/A	N/A
	diameter ft.	N/A	N/A	N/A	N/A
	Volume (ACFM)	N/A	N/A	N/A	N/A
	Temp (°F)	N/A	N/A	N/A	N/A
Maximum Operating Schedule	hour/day	24	24	24	24
	day/year	365	365	365	365
	hour/year	3,840	3,840	3,840	3,840
Approximate Percentage of Operation from:	Jan - Mar	10	10	10	10
	Apr - Jun	40	40	40	40
	Jul – Sep	40	40	40	40
	Oct - Dec	10	10	10	10
Maximum Particulate Emissions	lb/hour	0.332 Uncontrolled PM	7.50 Uncontrolled PM	2.25 Uncontrolled PM	6.0 Uncontrolled PM
	Ton/year	0.090 Uncontrolled PM	0.938 Uncontrolled PM	0.313 Uncontrolled PM	0.313 Uncontrolled PM

Emissions from crushing & screening was calculated using spreadsheet.

1 Type Storage - Code as follows: (Note capacity of each bin, building or enclosure)

OS - Open Stockpile
B - Bin or Storage Silo (full enclosure)
SB - Storage Building (full enclosure)
E- Enclosure (walls but no top)
SWF- Stockpiles with wind fences
OTH- Other - Specify in footnote or attachment

2. Give maximum and average quantity of material in storage at any given time (e.g. silo capacity, stockpile size, etc...)

3. TYPE DUST CONTROLS DURING STORAGE
If storage is by other than by bin or full enclosure Code as follows:

N - None
WS- Water Sprays
C- Spraying with chemical surfactant
OTH- Other - Specify in footnote or attachment

4. METHOD OF PLACING MATERIAL ONTO STOCKPILE OR INTO BINS OR LOADING OUT FROM STOCKPILES OR BINS - Code as follows:

C- Clamshell
TD- Truck Dumping
FE- Front Endloader
ST- Stacking Tubes
MS- Mobile Conveyor - Stacker
SS- Stationary Conveyor - Stacker
P- Pneumatic Conveyor - Stacker
FC- Fixed Height Chute from bins
TC- Telescoping Chute from bins
UC- Under-pole or under-bin reclaim conveyor
RC- Reclaim Conveyor (rake or bucket reclaim conveyor reclaiming from surface of stockpile)
OTH- Other - Describe in a footnote or attachment

5. TYPE DUST CONTROLS - Code as follows:

N– None
WS- Water Sprays
WSA- Water Sprays with Wetting Agents
CS- Chemical Dust Suppressant (sprays, etc...)
FE- Full Enclosures
PE- Partial Enclosures
MD- Minimization of material drop height
EM- Enclosure and evacuation to mechanical collector
EB- Enclosure and evacuation to baghouse
ES- Enclosure and evacuation to scrubber
OTH- Other - describe in footnote or attachment

6. TYPE CONVEYOR OR TRANSFER POINT - Code as follows:

Conveyors

BC- Belt Conveyor
VC- Vibrating Conveyor
SC- Screw Conveyor
DL- Drag-link conveyor
BE- Bucket Elevator
PS- Pneumatic System
OTH- Other describe in footnote or attachment

Transfer Points

01- Conveyor to Conveyor
02- Conveyor to Bucket Elevator
03- Conveyor to Hopper or Bin
04- Bucket Elevator to Hopper or Bin
05- Pneumatic conveyor to bin
06- Truck Dumping onto ground
07- Truck Dumping into hopper
08- Loading trucks through stationary chute
09- Loading trucks through telescoping chute
10- Loading Trucks by endloader
11- Railcar unloading-side or bottom dumping
12- Railcar unloading-rotary unloader
13- Railcar loading /unloading by pneumatic system
14- Railcar loading through stationary source
15- Railcar loading through telescopic chute
16- Railcar loading by front end-loader
17- Railcar loading by railcar
18- Barge loading/unloading by clamshell
19- Barge unloading - bucket ladder unloader
20- Barge unloading - from a fixed-height conveyor or stationary chute
21- Barge loading - variable height conveyor or telescoping chute
22- Other - describe in footnote or attachment

7. If more than one material is handled by the listed conveyor or transfer point list each material and furnish the requested data in the table for each material.

8. Describe type of unit such as hammermill, ball mill, double-deck (DD) screen, double roll (DR) crusher, etc...

9. Describe nominal size reduction, example +2"/ -⅜

metso
metso

Engine Emissions Data

For Emissions feedback and questions contact:
engine_certification@cat.com
This link is case sensitive.

Serial Number(Machine)	
Serial Number(Engine)	*44407744*
Sales Model	ENGINE C4.4 ACERT TA
Build Date	January 22, 2010
EEC Approval	e11*97/68IA*2004/26*0691*01
Interlock Code Progression	
As Shipped Data	
Engine Arrangement Number	348-8482
Certification Arrangement	
Certification	EPA
Labeled Model Year	
Family Code	APKXL04.4NJ1
Family Certification	PKX-NRCI-10-18
Advertised Power	142.4HP/2200RPM/T3028
Liters	269CU IN

Caterpillar Confidential: **Green**
Content Owner: Commercial Processes Division
Web Master(s): PSG Web Based Systems Support
Current Date: Tuesday, August 20, 2013 2:08:49 PM
© Caterpillar Inc. 2013 All Rights Reserved.
Data Privacy Statement.

CATERPILLAR®

Caterpillar Inc.
©2009 Commercial in Confidence, proprietary information of Caterpillar Inc.

Engine Model: C4.4

Curve: C 3028 **Sheet 1**
Issue: 1 **Date:** 20-May-2009

Rating Standards:	ISO 14396: 2002
Production Tolerance On Power Output:	+3%, -3%
Total Barometric Pressure (kPa):	100
Vapour Pressure (kPa):	1
Air Inlet Temperature (°C):	25

Fuel Types:	Europe Off Highway	USA FED Off Highway
Fuel Specification:	CEC RF-06-99	EPA 2D 89.330 LS 2006
Density (kg/l @ 15°C):	0.833 - 0.837	0.840 - 0.865
Viscosity (mm²/s @ 40°C):	2.3 - 3.5	2.0 - 3.2
Sulphur Content (% mass):	0.03 max	0.03 - 0.05
Cetane No:	52 - 54	40 - 50

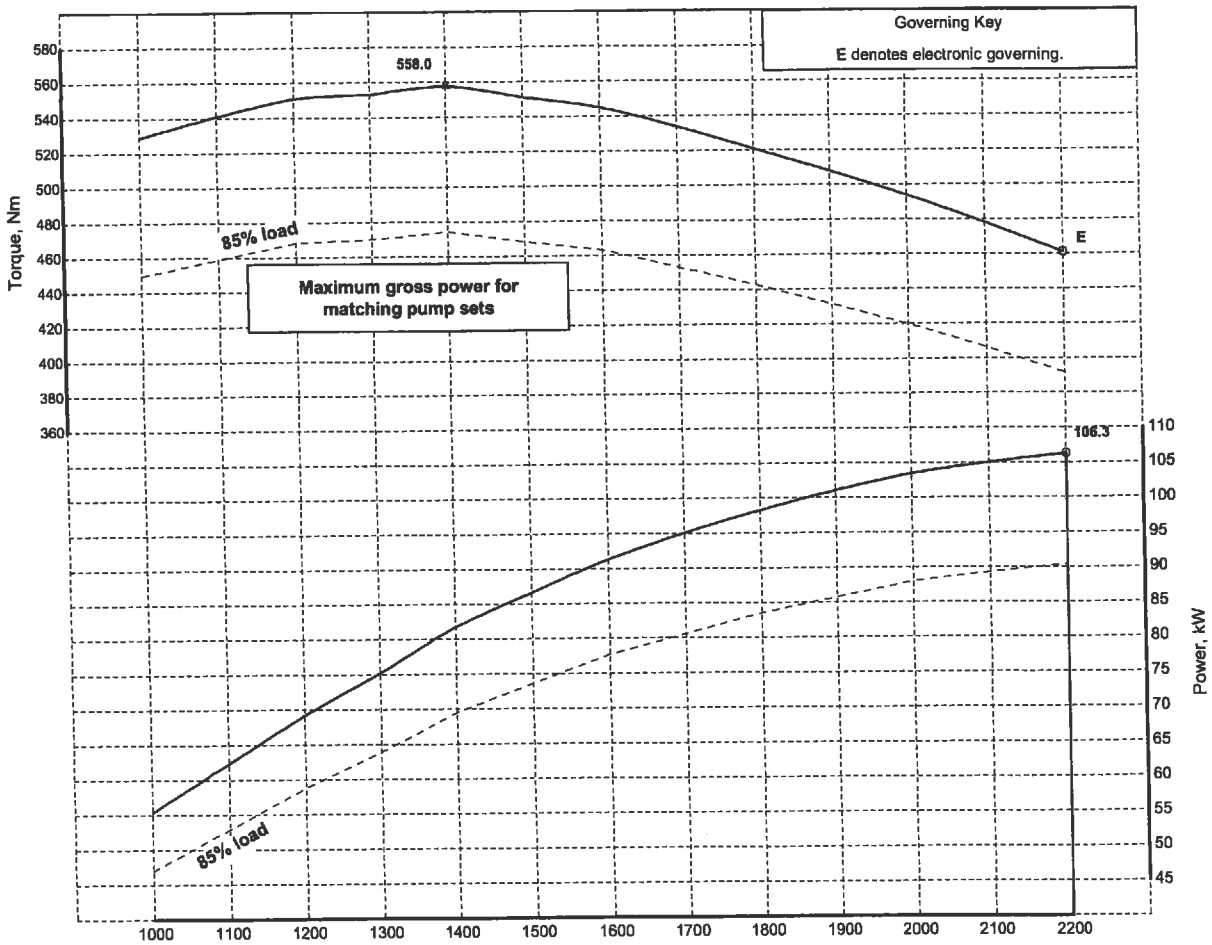

Performance with fuel oil at 40°C at pump inlet.

Notes:
1. For duty cycle refer to the C power rating definition in the Caterpillar Industrial Engine Ratings Guide (LECH3874).

Exhaust Quality Standard	**Certification Refs (Rated Speeds)**
Smoke:	
77/537/EEC- Includes FAS.	3028/2200 (2200)
Emissions:	
US EPA 40 CFR Part 89 Tier 3.	PKXL04.4NJ1 (2200)
EU NRMM 97/68/EC Stage 3A.	e11*97/68IA*2004/26*0691* (2200)

Power Standard	**Certification Refs (Rated Speeds)**
UN/ECE R120	120R-000027 (2200)

Auxiliaries fitted to engine:
Alternator - off load.
Balancer - not fitted.
Fan - not fitted.

Compiled by: P.R. Quemby (Product Manager) **Date:** 7-May-2009

Accepted by: C. Herring (PE Manager) **Date:** 7-May-2009

Issued by: J.H. Boorman (Legislation Engineer)

Rating Curves Data Sheet

Curve C 3028 Sheet 2

Note1: Unless otherwise specified, all stated data is for maximum rated speed and 100% load.

General Data

Engine Model:	C4.4
Number Of Cylinders:	4
Bore (mm):	105.0
Stroke (mm):	127.0
Configuration:	Vertical In Line
Displacement (litres):	4.4
Aspiration:	Turbocharged
Compression Ratio:	16.2 : 1
Combustion Bowl:	Not available

Fuel System

Fuel Pump Model:	Caterpillar HPCR
Injection Timing (°BTDC) - Static:	Not applicable
- Dynamic:	Not available
HP Rail Pressure (MPa):	Not available
Fuel Pump Pressure (In) (kPa):	10.0
Fuel Filter Max Particle Size (micron):	2
Fuel Return System Type:	Return to Tank

Lubrication System

Lubricating Oil Specification: See Engine Specification Manual

Exhaust System

Exhaust Flow (kg/min):	10.15 (20.1 m³/min)
Exhaust Temperature (°C):	518 (ATC)

Cold Start Capability

Unaided Start Limit (°C):	Not Applicable
Aided Start Limit (°C):	-25
Start Aid (Optional):	Glowplugs fitted as standard
Minimum Cranking Speed (rev/min) - unaided:	Not applicable
- aided:	100

Cooling System

Heat Rejected @ Rated Speed (kW):	60.1
Heat Rejected @ Peak Torque (kW):	45.9
Coolant Flow (litres/min):	207.0
Thermostat - Start To Open (°C):	82
Thermostat - Fully Open (°C):	95
Recommended Cap Pressure (kPa):	Not available
Max Top Tank Pressure (kPa):	100 *

** See General Installation Manual*

Air System

Engine Air Flow (kg/min):	9.75 (8.37 m³/min)
Induction Manifold Pressure (kPa):	160.4

Charge Air Cooler System

Charge Air Cooling System:	Air-to-Air
Max Total Pressure Drop Inc Pipes (kPa):	10.0
Charge Air Cooler Heat Rejection (kW):	18.1
Manifold Charge Air Temperature (°C):	55.0

Turbocharger

Turbocharger Type:	Borg Warner B1 with wastegate
Maximum Altitude (m):	3000

Performance Data

Friction Power @ Rated Speed (kW):	Not available
Friction Power @ Peak Torque (kW):	Not available
Torque @ 800 rev/min (Nm):	377

For further performance data see table below.

Performance Data — Rating Standard: ISO 14396: 2002

Speed (rev/min)	Torque (Nm)	Power (kW)	Max Exhaust Back Pressure (kPa)	Max Inlet Restriction (kPa)	Governing Categories (key on sht 1)
2200	461	106.3	15.0	5.0	E
2000	494	103.5			
1800	521	98.3			
1600	545	91.4			
1400	558	81.8			
1200	551	69.2			
1000	529	55.3			

Further Notes:
T3028 is the unbalanced curve of T2894

Internal References

Curve Issue No:	1	DCP Number(s):	TAN Number:
Curve Issue Date :	20-May-2009		FIE EDR Number

CATERPILLAR®	SFC Map (g/kW.h) for Engine Model: C4.4	Curve: C 3028 Sheet 3 Issue: 1 Date: 20-May-2009

Caterpillar Inc.
©2009 Commercial In Confidence, proprietary information of Caterpillar Inc.

NOTE: This SFC data was recorded from a single test of a development engine and it represents indicative performance for the engine model. The fuel consumption of individual engines may deviate due to component and setting tolerances associated with production processes.

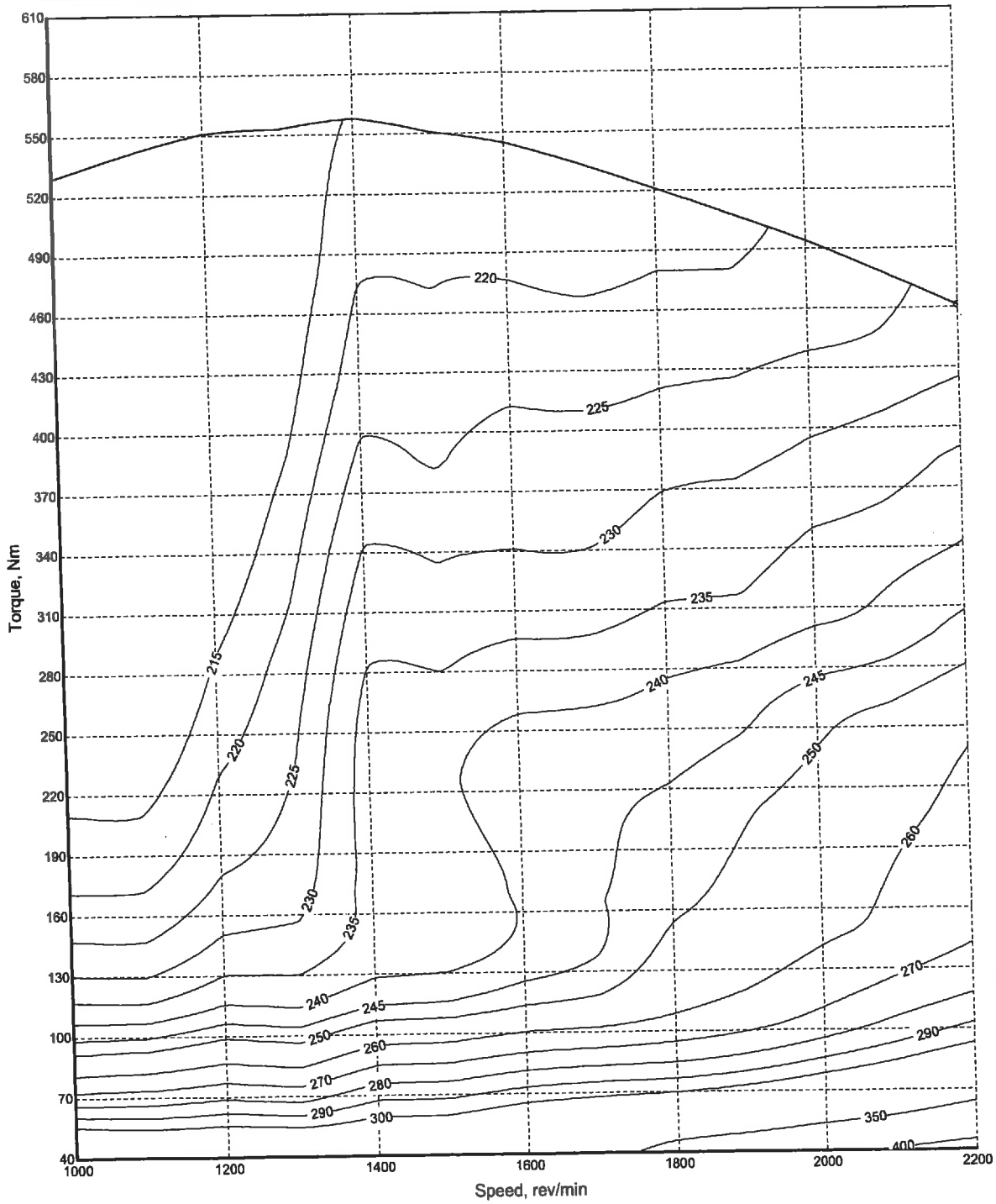

Performance with fuel oil at 40°C at pump inlet.

For rating standards and technical specification information refer to sheets 1 and 2.

Issued by:
J.H. Boorman
(Legislation Engineer)

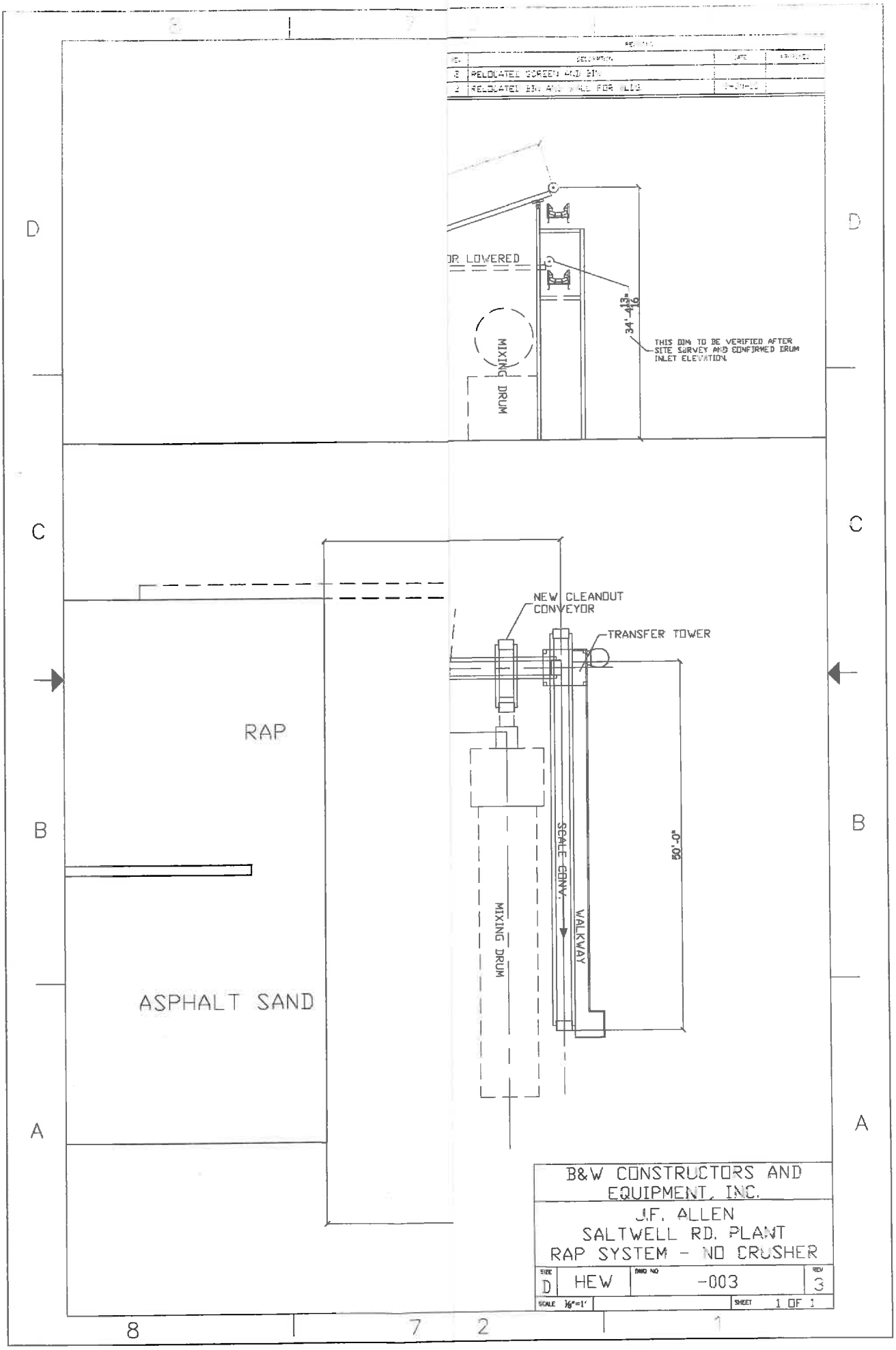
RELOCATED SCREEN AND BIN
RELOCATED BIN AND WALL FOR ALLIS
OR LOWERED
MIXING DRUM
34'-4 13/16"
THIS DIM TO BE VERIFIED AFTER SITE SURVEY AND CONFIRMED DRUM INLET ELEVATION
NEW CLEANOUT CONVEYOR
TRANSFER TOWER
RAP
ASPHALT SAND
MIXING DRUM
SCALE CONV.
WALKWAY
50'-0"
B&W CONSTRUCTORS AND EQUIPMENT, INC.
J.F. ALLEN
SALTWELL RD. PLANT
RAP SYSTEM - NO CRUSHER
SIZE D
HEW
DWG NO -003
REV 3
SCALE 1/8"=1'
SHEET 1 OF 1

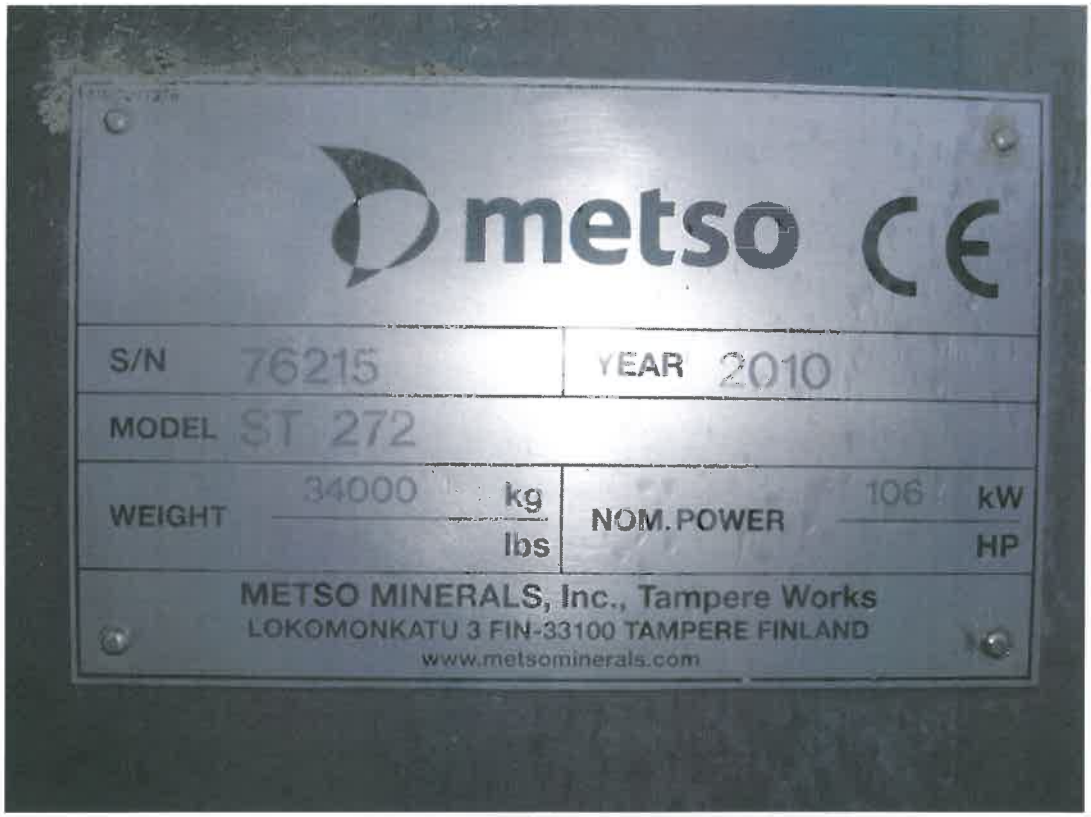
metso
CE
S/N 76215
YEAR 2010
MODEL ST 272
WEIGHT 34000 kg
lbs
NOM. POWER 106 kW
HP
METSO MINERALS, Inc., Tampere Works
LOKOMONKATU 3 FIN-33100 TAMPERE FINLAND
www.metsominerals.com

WALLENIUS WILHELMSEN
LOGISTICS
76215
FIHEL874963
CC102 – TRS
TORRENS
DEBRH
POL
USBAL
POD
PFO

California Environmental Protection Agency AIR RESOURCES BOARD	PERKINS ENGINES COMPANY LTD.	EXECUTIVE ORDER U-R-022-0144 New Off-Road Compression-Ignition Engines

Pursuant to the authority vested in the Air Resources Board by Sections 43013, 43018, 43101, 43102, 43104 and 43105 of the Health and Safety Code; and

Pursuant to the authority vested in the undersigned by Sections 39515 and 39516 of the Health and Safety Code and Executive Order G-02-003;

IT IS ORDERED AND RESOLVED: That the following compression-ignition engines and emission control systems produced by the manufacturer are certified as described below for use in off-road equipment. Production engines shall be in all material respects the same as those for which certification is granted.

MODEL YEAR	ENGINE FAMILY	DISPLACEMENT (liters)	FUEL TYPE	USEFUL LIFE (hours)
2010	APKXL04.4NJ1	4.4	Diesel	8000

SPECIAL FEATURES & EMISSION CONTROL SYSTEMS	TYPICAL EQUIPMENT APPLICATION
Direct Diesel Injection, Electronic Control Module, Turbocharger, Charge Air Cooler	Cranes, Loaders, Tractor, Dozer, Pump, Compressor, Generator Set, Other Industrial Equipment

The engine models and codes are attached.

The following are the exhaust certification standards (STD) and certification levels (CERT) for hydrocarbon (HC), oxides of nitrogen (NOx), or non-methane hydrocarbon plus oxides of nitrogen (NMHC+NOx), carbon monoxide (CO), and particulate matter (PM) in grams per kilowatt-hour (g/kw-hr), and the opacity-of-smoke certification standards and certification levels in percent (%) during acceleration (Accel), lugging (Lug), and the peak value from either mode (Peak) for this engine family (Title 13, California Code of Regulations, (13 CCR) Section 2423):

RATED POWER CLASS	EMISSION STANDARD CATEGORY		EXHAUST (g/kw-hr)					OPACITY (%)		
			HC	NOx	NMHC+NOx	CO	PM	ACCEL	LUG	PEAK
56 ≤ kW < 75	Tier 3	STD	N/A	N/A	4.7	5.0	0.40	20	15	50
75 ≤ kW < 130	Tier 3	STD	N/A	N/A	4.0	5.0	0.30	20	15	50
		CERT	–	–	3.7	1.8	0.21	7	2	11

BE IT FURTHER RESOLVED: That for the listed engine models, the manufacturer has submitted the information and materials to demonstrate certification compliance with 13 CCR Section 2424 (emission control labels), and 13 CCR Sections 2425 and 2426 (emission control system warranty).

Engines certified under this Executive Order must conform to all applicable California emission regulations.

This Executive Order is only granted to the engine family and model-year listed above. Engines in this family that are produced for any other model-year are not covered by this Executive Order.

Executed at El Monte, California on this 16 day of November 2009.

Annette Hebert

Annette Hebert, Chief
Mobile Source Operations Division

Attachment 1 of 2
10-29-2009

0-R-022-0144

Engine Model Summary Template

Engine Family	1.Engine Code	2.Engine Model	3.BHP@RPM (SAE Gross)	4.Fuel Rate: mm/stroke @ peak HP (for diesel only)	5.Fuel Rate: (lbs/hr) @ peak HP (for diesels only)	6.Torque @ RPM (SEA Gross)	7.Fuel Rate: mm/stroke@peak torque	8.Fuel Rate: (lbs/hr)@peak torque	9.Emission Control Device Per SAE J1930
APKXL04.4NJ1	1	3339/2200	144@2200	114.5	55.2	413@1400	131.7	40.4	DDI TAA ECM TC CAC
APKXL04.4NJ1	2	2936/2000	145@2000	120.0	52.6	405@1400	124.3	38.8	DDI TAA ECM
APKXL04.4NJ1	3	2932/2000	118@2000	100.5	44.1	391@1400	121.3	37.2	DDI TAA ECM
APKXL04.4NJ1	4	2940/2000	136.8@2000	114.8	50.3	406@1400	124.4	38.2	DDI TAA ECM
APKXL04.4NJ1	5	2934/2000	107.3@2000	91.0	40.0	354@1400	112.4	34.5	DDI TAA ECM
APKXL04.4NJ1	6	3028/2200	142.4@2200	112.0	54.0	410@1400	126.8	38.9	DDI TAA ECM
APKXL04.4NJ1	7	2894/2200	139.6@2200	112.0	54.0	406@1400	126.8	38.9	DDI TAA ECM
APKXL04.4NJ1	8	3032/2200	136.8@2200	107.3	51.7	395@1400	121.4	37.3	DDI TAA ECM
APKXL04.4NJ1	9	2908/2200	134@2200	107.3	51.7	391@1400	121.4	37.3	DDI TAA ECM
APKXL04.4NJ1	10	3026/2200	129.4@2200	102.4	49.4	381@1400	117.4	36.0	DDI TAA ECM
APKXL04.4NJ1	11	2900/2200	127@2200	102.4	49.4	376@1400	117.4	36.0	DDI TAA ECM
APKXL04.4NJ1	12	3020/2200	125@2200	100.2	48.3	366@1400	114.7	35.2	DDI TAA ECM
APKXL04.4NJ1	13	2898/2200	122@2200	100.2	48.3	361@1400	114.7	35.2	DDI TAA ECM
APKXL04.4NJ1	14	3198/2200	122@2200	98.8	47.6	361@1400	113.4	34.8	DDI TAA ECM
APKXL04.4NJ1	15	3197/2200	120@2200	98.8	47.6	358@1400	113.4	34.8	DDI TAA ECM
APKXL04.4NJ1	16	3018/2200	117@2200	96.0	46.3	381@1400	118.4	36.3	DDI TAA ECM
APKXL04.4NJ1	17	2939/2200	114@2200	96.0	46.3	376@1400	118.4	36.3	DDI TAA ECM
APKXL04.4NJ1	18	3012/2200	110@2200	91.1	43.9	358@1400	112.5	34.5	DDI TAA ECM
APKXL04.4NJ1	19	2906/2200	107@2200	91.1	43.9	354@1400	112.5	34.5	DDI TAA ECM
APKXL04.4NJ1	20	3272/2400	125.9@2400	95.9	50.5	364@1400	114.1	36.0	DDI TAA ECM
APKXL04.4NJ1	21	3273/2400	123@2400	95.9	50.5	361@1400	114.1	36.0	DDI TAA ECM
APKXL04.4NJ1	22	3274/2400	141@2400	104.1	54.8	394@1400	121.9	38.5	DDI TAA ECM
APKXL04.4NJ1	23	3275/2400	138.8@2200	104.1	54.8	391@1400	121.9	38.5	DDI TAA ECM
APKXL04.4NJ1	24	3362/1800	156.8@1800	138.5	54.6	457@1800	138.5	54.6	DDI TAA ECM
APKXL04.4NJ1	25	3364/1500	131@1500	138	45.4	457@1500	138	45.4	DDI TAA ECM
APKXL04.4NJ1	26	3366/1800	130@1800	120	47.4	379@1800	120	47.4	DDI TAA ECM

Attachment 2 of 2
10-29-2009

Engine Model Summary Template

U-R-022-0144

Engine Family	1.Engine Code	2.Engine Model	3.BHP@RPM (SAE Gross)	4.Fuel Rate: mm/stroke @ peak HP (for diesel only)	5.Fuel Rate: (lbs/hr) @ peak HP (for diesels only)	6.Torque @ RPM (SEA Gross)	7.Fuel Rate: mm/stroke@peak torque	8.Fuel Rate: (lbs/hr)@peak torque	9.Emission Control Device Per SAE J1930
APKXL04.4NJ1	27	3368/1500	108@1500	112	36.8	379@1500	112	36.8	DDI TAA ECM TC CAC
APKXL04.4NJ1	28	3260/2200	102.5@2200	84.3	40.7	348@1400	109.0	33.5	ECM DDI TAA
APKXL04.4NJ1	29	3261/2200	100@2200	84.3	40.7	345/1400	109.0	33.5	ECM DDI TAA
APKXL04.4NJ1	30	3262/2200	117.3@2200	94.0	45.3	394/1400	121.7	37.3	ECM DDI TAA
APKXL04.4NJ1	31	3263/2200	114.9@2200	94.0	45.3	391/1400	121.7	37.3	ECM DDI TAA
APKXL04.4NJ1	32	3264/2200	126.9@2200	99.8	48.1	409@1400	124.6	38.2	ECM DDI TAA
APKXL04.4NJ1	33	3265/2200	124.4@2200	99.8	48.1	406@1400	124.6	38.2	ECM DDI TAA
APKXL04.4NJ1	34	3425/2220	123.1@2220	97.8	47.6	361@1400	112.0	34.4	ECM DDI TAA
APKXL04.4NJ1	35	3426/2500	124.7@2500	92.0	50.4	362@1500	107.9	35.5	ECM DDI TAA
APKXL04.4NJ1	36	3472/2400	126@2400	95.9	50.5	364@1400	114.1	36.0	DDI TAA ECM
APKXL04.4NJ1	37	3474/2400	141.3@2400	104.1	54.8	361@1400	121.9	38.5	DDI TAA ECM
APKXL04.4NJ1	38	3494/2200	122@2200	98.8	47.6	358@1400	113.4	34.8	DDI TAA ECM

California Environmental Protection Agency AIR RESOURCES BOARD	PERKINS ENGINES COMPANY LTD.	EXECUTIVE ORDER U-R-022-0145 New Off-Road Compression-Ignition Engines

Pursuant to the authority vested in the Air Resources Board by Sections 43013, 43018, 43101, 43102, 43104 and 43105 of the Health and Safety Code; and

Pursuant to the authority vested in the undersigned by Sections 39515 and 39516 of the Health and Safety Code and Executive Order G-02-003;

IT IS ORDERED AND RESOLVED: That the following compression-ignition engines and emission control systems produced by the manufacturer are certified as described below for use in off-road equipment. Production engines shall be in all material respects the same as those for which certification is granted.

MODEL YEAR	ENGINE FAMILY	DISPLACEMENT (liters)	FUEL TYPE	USEFUL LIFE (hours)
2010	APKXL04.4NJ2	4.4	Diesel	8000

SPECIAL FEATURES & EMISSION CONTROL SYSTEMS	TYPICAL EQUIPMENT APPLICATION
Direct Diesel Injection, Turbocharger, Charge Air Cooler, Electronic Control Module	Cranes, Loaders, Tractor, Dozer, Pump, Compressor, Generator Set, Other Industrial Equipment

The engine models and codes are attached.

The following are the exhaust certification standards (STD) and certification levels (CERT) for hydrocarbon (HC), oxides of nitrogen (NOx), or non-methane hydrocarbon plus oxides of nitrogen (NMHC+NOx), carbon monoxide (CO), and particulate matter (PM) in grams per kilowatt-hour (g/kw-hr), and the opacity-of-smoke certification standards and certification levels in percent (%) during acceleration (Accel), lugging (Lug), and the peak value from either mode (Peak) for this engine family (Title 13, California Code of Regulations, (13 CCR) Section 2423):

RATED POWER CLASS	EMISSION STANDARD CATEGORY		EXHAUST (g/kw-hr)					OPACITY (%)		
			HC	NOx	NMHC+NOx	CO	PM	ACCEL	LUG	PEAK
56 ≤ kW < 75	Tier 3	STD	N/A	N/A	4.7	5.0	0.40	20	15	50
		CERT	--	--	4.0	2.3	0.24	7	2	11

BE IT FURTHER RESOLVED: That for the listed engine models, the manufacturer has submitted the information and materials to demonstrate certification compliance with 13 CCR Section 2424 (emission control labels), and 13 CCR Sections 2425 and 2426 (emission control system warranty).

Engines certified under this Executive Order must conform to all applicable California emission regulations.

This Executive Order is only granted to the engine family and model-year listed above. Engines in this family that are produced for any other model-year are not covered by this Executive Order.

Executed at El Monte, California on this 16 day of November 2009.

Annette Hebert, Chief
Mobile Source Operations Division

PERFORMANCE DATA[DM8117]

July 2, 2015

Performance Number: DM8117 **Change Level: 03**

SALES MODEL:	C9	COMBUSTION:	DI
ENGINE POWER (BHP):	300	ENGINE SPEED (RPM):	2,200
PEAK TORQUE (FT-LB):	987 3	PEAK TORQUE SPEED (RPM):	1,400
COMPRESSION RATIO:	16.1	TORQUE RISE (%):	37
RATING LEVEL;	INDUSTRIAL B	ASPIRATION:	TA
PUMP QUANTITY:	1	AFTERCOOLER TYPE:	ATAAC
FUEL TYPE:	DIESEL	AFTERCOOLER CIRCUIT TYPE:	JW+OC, ATAAC
MANIFOLD TYPE:	DRY	INLET MANIFOLD AIR TEMP (F):	120
GOVERNOR TYPE:	ELEC	JACKET WATER TEMP (F):	192.2
CAMSHAFT TYPE:	STANDARD	TURBO CONFIGURATION:	SINGLE
IGNITION TYPE:	CI	TURBO QUANTITY:	1
INJECTOR TYPE:	EUI	TURBOCHARGER MODEL:	S310G-1 10
REF EXH STACK DIAMETER (IN):	4	CERTIFICATION YEAR:	2005
MAX OPERATING ALTITUDE (FT):	8,501	PISTON SPD @ RATED ENG SPD (FT/MIN):	2,150.9

INDUSTRY	SUBINDUSTRY	APPLICATION
INDUSTRIAL	FORESTRY	INDUSTRIAL
INDUSTRIAL	GENERAL INDUSTRIAL	INDUSTRIAL
OIL AND GAS	WELL SERVICING	INDUSTRIAL
INDUSTRIAL	CONSTRUCTION	INDUSTRIAL
OIL AND GAS	LAND PRODUCTION	INDUSTRIAL
INDUSTRIAL	AGRICULTURE	INDUSTRIAL
INDUSTRIAL	MATERIAL HANDLING	INDUSTRIAL
INDUSTRIAL	MINING	INDUSTRIAL

General Performance Data

ENGINE SPEED	ENGINE POWER	ENGINE TORQUE	BRAKE MEAN EFF PRES (BMEP)	BRAKE SPEC FUEL CONSUMPTN (BSFC)	VOL FUEL CONSUMPTN (VFC)	INLET MFLD PRES	INLET MFLD TEMP	EXH MFLD TEMP	EXH MFLD PRES	ENGINE OUTLET TEMP
RPM	BHP	LB-FT	PSI	LB/BHP-HR	GAL/HR	IN-HG	DEG F	DEG F	IN-HG	DEG F
2,200	300	717	201	0.368	15.8	46.0	118 6	1,086.8	44.5	882 6
2,100	300	751	211	0.364	15 8	46.2	116.3	1,093.2	42 5	871 8
2,000	300	789	221	0.359	15.4	46 6	115 3	1,106.3	40.5	868 0
1,900	300	830	233	0.355	15.2	47.2	115.5	1,126.5	38.3	911 0
1,800	300	876	246	0.352	15.1	47.8	114.4	1,148.2	36.3	935 3
1,700	293	907	254	0.352	14.8	47.6	111.8	1,166.0	33.8	955.6
1,600	284	933	262	0.353	14.3	46.9	109.3	1,189.3	3[illegible].2	981.6
1,500	274	959	269	0.354	13.9	45 8	107.2	1,220.1	28.4	1,015 2
1,400	264	989	277	0.356	13.4	44 7	105 6	1,260.4	25.6	1,058 2
1,300	244	988	277	0 361	12.6	41.1	102 4	1,302.4	22 0	1,111 8
1,200	226	988	277	0.366	11.8	36 7	98.9	1,354.3	18.3	1,177 9
1,100	207	988	277	0.373	11.0	31.6	95.2	1,415 6	14.5	1,256 0

ENGINE SPEED	ENGINE POWER	COMPRESSOR OUTLET PRES	COMPRESSOR OUTLET TEMP	WET INLET AIR VOL FLOW RATE	ENGINE OUTLET WET EXH GAS VOL FLOW RATE	WET INLET AIR MASS FLOW RATE	WET EXH GAS MASS FLOW RATE	WET EXH VOL FLOW RATE (32 DEG F AND 29.98 IN HG)	DRY EXH VOL FLOW RATE (32 DEG F AND 29.98 IN HG)
RPM	BHP	IN-HG	DEG F	CFM	CFM	LB/HR	LB/HR	FT3/MIN	FT3/MIN
2,200	300	48	329 7	734 7	1,887 9	3,224.6	3,335.2	702.0	645 4
2,100	300	48	327.2	710 2	1,835.8	3,112 8	3,222 1	677 9	622.3
2,000	300	48	326 0	683.7	1,788 9	2,993 4	3,101.4	652.7	598 0
1,900	300	49	326.4	656.5	1,748.0	2,871.5	2,979.6	627 0	573 2
1,800	300	49	327 5	630.7	1,708.4	2,755 3	2,861 1	602 2	549.1
1,700	293	49	326.6	600.6	1,646.1	2 615.5	2,718.6	571 9	520 5
1,600	284	48	325.3	567 2	1,577 8	2,461 7	2,561 9	538.2	488.8
1,500	274	47	323 4	530 2	1,508 6	2,294 5	2,391 5	502.3	454 6
1,400	264	46	320.7	490 0	1,436.0	2,115.7	2,209.7	465.2	419.2
1,300	244	42	308.9	439 1	1,323.3	1 [illegible]89 5	1,977 8	414.0	371.0
1,200	226	37	294.8	384.8	1,204.9	1.649 1	1,731 8	361.8	321 9
1,100	207	32	278 2	326.9	1,080.0	1,393.9	1,471 0	309.5	273 1

Heat Rejection Data

ENGINE SPEED	ENGINE POWER	REJECTION TO JACKET WATER	REJECTION TO ATMOSPHERE	REJECTION TO EXH	EXHUAST RECOVERY TO 350F	FROM OIL COOLER	FROM AFTERCOOLER	WORK ENERGY	LOW HEAT VALUE ENERGY	HIGH HEAT VALUE ENERGY
RPM	BHP	BTU/MIN	BTU/MIN	BTU/MIN	BTU/MIN	BTU/MIN	BTU/MIN	BTU/MIN	BTU/MIN	BTU/MIN
2,200	300	5,271	2,154	13,255	7,215	1,807	2,725	12,739	33,930	36,144
2,100	300	5,220	2,120	12,990	7,105	1,785	2,629	12,739	33,611	35,698
2,000	300	5,177	2,023	12,789	7,066	1,763	2,525	12,739	33,092	35,251
1,900	300	5,102	1,915	12,658	7,097	1,742	2,426	12,739	32,705	34,839
1,800	300	5,056	1,825	12,543	7,130	1,726	2,352	12,739	32,396	34,514
1,700	293	5,171	1,625	12,235	7,028	1,686	2,250	12,443	31,657	33 723
1,600	284	5,131	1,526	11,900	6,929	1,637	2,129	12,056	30,737	32,743
1,500	274	4,905	1,621	11,555	6,838	1,584	1,986	11,616	29,745	31,685
1,400	264	4,683	1,766	11,212	6,761	1,533	1,822	11,175	28,780	30,658
1,300	244	4,454	1,784	10,833	6,550	1,440	1,563	10,367	27,036	28,801
1,200	226	4,350	1,783	9,985	6,282	1,349	1,294	9,571	25,330	26 983
1,100	207	4,401	1,775	9,206	5,900	1,259	1,021	8,775	23,636	25.178

Emissions Data

RATED SPEED POTENTIAL SITE VARIATION: 2200 RPM

ENGINE POWER		BHP	300	225	150	75.1	30.0
PERCENT LOAD		%	100	75	50	25	10
TOTAL NOX (AS NO2)		G/HR	907	512	305	192	135
TOTAL CO		G/HR	828	903	263	393	381
TOTAL HC		G/HR	93	127	139	193	192
PART MATTER		G/HR	30.7	34.9	47 3	49.0	40.3
TOTAL NOX (AS NO2)	(CORR 5% O2)	MG/NM3	1 339.3	933 2	753.5	823.0	977 4
TOTAL CO	(CORR 5% O2)	MG/NM3	1,223.0	1,646.0	657.8	1,691.4	2,759.6
TOTAL HC	(CORR 5% O2)	MG/NM3	119.4	201 7	299.0	718 9	1,205.0
PART MATTER	(CORR 5% O2)	MG/NM3	38.4	54.8	102.4	188 5	268 2
TOTAL NOX (AS NO2)	(CORR 5% O2)	PPM	652	455	367	401	476
TOTAL CO	(CORR 5% O2)	PPM	976	1,318	526	1,353	2,208
TOTAL HC	(CORR 5% O2)	PPM	223	376	558	1,342	2.249
TOTAL NOX (AS NO2)		G/HP-HR	3 05	2 29	2 05	2.56	4.52
TOTAL CO		G/HP-HR	2.76	4.04	1 77	5.26	12 74
TOTAL HC		G/HP-HR	0.31	0 57	0 93	2.58	6.44
PART MATTER		G/HP-HR	0.10	0.16	0 32	0.66	1 35
TOTAL NOX (AS NO2)		LB/HR	2 00	1 13	0.67	0 42	0 30
TOTAL CO		LB/HR	1.83	1 99	0.58	0 87	0 84
TOTAL HC		LB/HR	0.21	0 28	0 31	0.42	0 42
PART MATTER		LB/HR	0.07	0 08	0 10	0.11	0 09

RATED SPEED NOMINAL DATA: 2200 RPM

ENGINE POWER		BHP	300	225	150	75.1	30.0
PERCENT LOAD		%	100	75	50	25	10
TOTAL NOX (AS NO2)		G/HR	840	474	282	177	125
TOTAL CO		G/HR	443	483	141	210	204
TOTAL HC		G/HR	49	67	74	102	102
TOTAL CO2		KG/HR	152	123	92	54	31
PART MATTER		G/HR	15 8	17 9	24 3	25 1	20 7
TOTAL NOX (AS NO2)	(CORR 5% O2)	MG/NM3	1,240 1	864 1	697 7	762 1	905 0
TOTAL CO	(CORR 5% O2)	MG/NM3	654 0	881 3	351 8	904 5	1,475.7
TOTAL HC	(CORR 5% O2)	MG/NM3	63 2	106 7	156 2	380 4	637 5
PART MATTER	(CORR 5% O2)	MG/NM3	19 7	28 1	52 5	96 7	137 5
TOTAL NOX (AS NO2)	(CORR 5% O2)	PPM	604	421	340	371	441
TOTAL CO	(CORR 5% O2)	PPM	523	705	281	724	1,181
TOTAL HC	(CORR 5% O2)	PPM	118	199	295	710	1,190
TOTAL NOX (AS NO2)		G/HP-HR	2 82	2 12	1 89	2 37	4 19
TOTAL CO		G/HP-HR	1.49	2 16	0.94	2 81	6.81
TOTAL HC		G/HP-HR	0.17	0 30	0.49	1.36	3 41
PART MATTER		G/HP-HR	0 05	0 08	0 16	0 34	0 69
TOTAL NOX (AS NO2)		LB/HR	1 85	1 05	0 62	0.39	0.28

PERFORMANCE DATA[DM8117]

July 2, 2015

TOTAL CO	LB/HR	0.98	1.06	0.31	0.46	0.45
TOTAL HC	LB/HR	0.11	0.15	0.16	0.22	0.22
TOTAL CO2	LB/HR	336	272	203	118	69
PART MATTER	LB/HR	0.03	0.04	0.05	0.06	0.05
OXYGEN IN EXH	%	11.0	12.2	13.5	15.3	17.0
DRY SMOKE OPACITY	%	0.5	0.6	1.0	1.3	1.1
BOSCH SMOKE NUMBER		0.37	0.54	0.93	1.15	1.00

Altitude Derate Data

ALTITUDE CORRECTED POWER CAPABILITY (BHP)

AMBIENT OPERATING TEMP (F)	30	40	50	60	70	80	90	100	110	120	130	140	NORMAL
ALTITUDE (FT)													
0	300	300	300	300	300	300	300	300	300	300	300	300	300
1,000	300	300	300	300	300	300	300	300	300	300	300	300	300
2,000	300	300	300	300	300	300	300	300	300	300	300	300	300
3,000	300	300	300	300	300	300	300	300	300	300	300	300	300
4,000	300	300	300	300	300	300	300	300	300	300	300	300	300
5,000	300	300	300	300	300	300	300	300	300	300	300	300	300
6,000	300	300	300	300	300	300	300	300	300	300	300	297	300
7,000	300	300	300	300	300	300	300	300	300	295	290	285	300
8,000	300	300	300	300	300	300	299	294	288	283	279	274	300
9,000	300	300	300	300	298	292	287	282	277	272	268	263	300
10,000	300	300	297	291	286	281	276	271	266	261	257	253	300
11,000	297	291	285	280	274	269	264	260	255	251	246	242	291
12,000	285	279	274	268	263	258	254	249	245	241	236	233	281
13,000	273	268	262	257	252	248	243	239	235	231	227	223	272
14,000	262	256	251	247	242	237	233	229	225	221	217	214	262
15,000	251	246	241	236	232	227	223	219	215	212	208	205	253

Cross Reference

Engine Arrangement			
Arrangement Number	Effective Serial Number	Engineering Model	Engineering Model Version
2446783	JSC00001	E705	-
2524430	JSC00001	E705	-
2524430	MBD00001	E705	-
3271007	JSC00001	E705	-
3930595	JSC00001	E705	-
3964949	JSC00001	E705	-

Test Specification Data						
Test Spec	Setting	Effective Serial Number	Engine Arrangement	Governor Type	Default Low Idle Speed	Default High Idle Speed
0K4893	PP5337	JSC00001	2446783	ELEC		
0K4893	PP5337	JSC00001	2524430	ELEC		
0K4894	PP5372	MBD00001	2524430	ELEC		
0K4893	PP5337	JSC00001	3271007	ELEC		
0K4893	PP5337	JSC00001	3930595	ELEC		
0K4893	PP5337	JSC00001	3964949	ELEC		

Performance Parameter Reference

Parameters Reference:DM9600-07
PERFORMANCE DEFINITIONS

<h2>PERFORMANCE DEFINITIONS DM9600</h2>
</br>
</br>
APPLICATION
Engine performance tolerance values below are representative of a typical production engine tested in a calibrated dynamometer test cell at SAE J1995 standard reference conditions. Caterpillar maintains ISO9001 2000 certified quality management systems for engine test Facilities to assure accurate calibration of test

equipment. Engine test data is corrected in accordance with SAE J1995. Additional reference material SAE J1228 J1349 ISO 8665 3046-1:2002E, 3046-3 1989 1515, 2534 2288 and 9249 may apply in part or are similar to SAE J1995. Special engine rating request (SERR) test data shall be noted.
</br>
</br>

PERFORMANCE PARAMETER TOLERANCE FACTORS

Power	+/- 3%
Torque	+/- 3%
Exhaust stack temperature	+/- 8%
Inlet airflow	+/- 5%
Intake manifold pressure-gage	+/- 10%
Exhaust flow	+/- 6%
Specific fuel consumption	+/- 3%
Fuel rate	+/- 5%
Specific DEF consumption	+/- 3%
DEF rate	+/- 5%
Heat rejection	+/- 5%
Heat rejection exhaust only	+/- 10%
Heat rejection CEM only	+/- 10%

</br>
Heat Rejection values based on using treated water
</br>
Torque is included for truck and industrial applications do not use for Gen Set or steady state applications
</br>
On C7 - C18 engines, at speeds of 1100 RPM and under these values are provided for reference only and may not meet the tolerance listed.
</br>
These values do not apply to C280/3600 For these models see the tolerances listed below.
</br>
</br>

C280/3600 HEAT REJECTION TOLERANCE FACTORS

Heat rejection	+/- 10%
Heat rejection to Atmosphere	+/- 50%
Heat rejection to Lube Oil	+/- 20%
Heat rejection to Aftercooler	+/- 5%

</br>
</br>

TEST CELL TRANSDUCER TOLERANCE FACTORS

Torque	+/- 0.5%
Speed	+/- 0.2%
Fuel flow	+/- 1.0%
Temperature	+/- 2.0 C degrees
Intake manifold pressure	+/- 0.1 kPa

</br>
OBSERVED ENGINE PERFORMANCE IS CORRECTED TO SAE J1995 REFERENCE AIR AND FUEL CONDITIONS.
</br>
</br>

REFERENCE ATMOSPHERIC INLET AIR
<u>FOR 3500 ENGINES AND SMALLER</u>
SAE J1228 AUG2002 for marine engines and J1995 JAN2014 for other engines, reference atmospheric pressure is 100 KPA (29.61 in hg), and standard temperature is 25deg C (77 deg F) at 30% relative humidity at the stated aftercooler water temp. or inlet manifold temp.

</br>
<u>FOR 3600 ENGINES</u>
Engine rating obtained and presented in accordance with ISO 3046/1 and SAE J1995 JANJAN2014 reference atmospheric pressure is 100 KPA (29.61 in hg), and standard temperature is 25deg C (77 deg F) at 30% relative humidity and 150M altitude at the stated aftercooler water temperature

</br>
</br>
MEASUREMENT LOCATION FOR INLET AIR TEMPERATURE
Location for air temperature measurement air cleaner inlet at stabilized operating conditions.
</br>
</br>

REFERENCE EXHAUST STACK DIAMETER
The Reference Exhaust Stack Diameter published with this dataset is only used for the calculation of Smoke Opacity values displayed

in this dataset. This value does not necessarily represent the actual stack diameter of the engine due to the variety of exhaust stack adapter options available. Consult the price list, engine order or general dimension drawings for the actual stack diameter size ordered or options available

</br>
</br>
REFERENCE FUEL
<u>DIESEL</u>
Reference fuel is #2 distillate diesel with a 35API gravity
A lower heating value is 42 780 KJ/KG (18,390 BTU/LB) when used at 29 (84.2) where the density is 838.9 G/Liter (7.001 Lbs/Gal)
</br>
<u>GAS</u>
Reference natural gas fuel has a lower heating value of 33.74 KJ/L (905 BTU/CU Ft). Low BTU ratings are based on 18.64 KJ/L (500 BTU/CU FT) lower heating value gas. Propane ratings are based on 87.56 KJ/L (2350 BTU/CU Ft) lower heating value gas.

</br>
</br>
ENGINE POWER (NET) IS THE CORRECTED FLYWHEEL POWER (GROSS) LESS EXTERNAL AUXILIARY LOAD
Engine corrected gross output includes the power required to drive standard equipment, lube oil, scavenge lube oil, fuel transfer, common rail fuel, separate circuit aftercooler and jacket water pumps. Engine net power available for the external (flywheel) load is calculated by subtracting the sum of auxiliary load from the corrected gross flywheel out put power. Typical auxiliary loads are radiator cooling fans, hydraulic pumps, air compressors and battery charging alternators. For Tier 4 ratings additional Parasitic losses would also include Intake, and Exhaust Restrictions.

</br>
</br>
ALTITUDE CAPABILITY
Altitude capability is the maximum altitude above sea level at standard temperature and standard pressure at which the engine could develop full rated output power on the current performance data set.
</br>
Standard temperature values versus altitude could be seen on TM2001.
</br>
When viewing the altitude capability chart the ambient temperature is the inlet air temp at the compressor inlet.

</br>
Engines with ADEM MEUI and HEUI fuel systems operating at conditions above the defined altitude capability derate for atmospheric pressure and temperature conditions outside the values defined see TM2001
</br>
Mechanical governor controlled unit injector engines require a setting change for operation at conditions above the altitude defined on the engine performance sheet. See your Caterpillar technical representative for non standard ratings.
</br>
</br>

REGULATIONS AND PRODUCT COMPLIANCE
TMI Emissions information is presented at 'nominal' and 'Potential Site Variation' values for standard ratings. No tolerances are applied to the emissions data. These values are subject to change at any time. The controlling federal and local emission requirements need to be verified by your Caterpillar technical representative.
</br>
Log on to the Technology and Solutions Divisions (T&SD) web page (https://pdgl.cat.com/cda/layout) for information including federal regulation applicability and time lines for implementation
</br>
Information for labeling and tagging requirements is also provided.
</br>
</br>

NOTES
Regulation watch covers regulations in effect and future regulation changes for world, federal, state and local. This page

includes items on the watch list where a regulation change or product change might be pending and may need attention of the engine product group. For additional emissions information log on to the TMI web page.
</br>
Additional product information for specific market application is available.
</br>
Customer's may have special emission site requirements that need to be verified by the Caterpillar Product Group engineer
</br>
</br>

EMISSIONS DEFINITIONS
Emissions DM1176
</br>
</br>

HEAT REJECTION DEFINITIONS:
Diesel Circuit Type and HHV Balance DM9500
</br>
</br>

HIGH DISPLACEMENT (HD) DEFINITIONS:
3500: EM1500
</br>
</br>

RATING DEFINITIONS:
Agriculture TM6008
</br>
Fire Pump : TM6009
</br>
Generator Set : TM6035
</br>
Generator (Gas) TM6041
</br>
Industrial Diesel TM6010
</br>
Industrial (Gas) TM6040
</br>
Irrigation TM5749
</br>
Locomotive TM6037
</br>
Marine Auxiliary TM6036
</br>
Marine Prop (Except 3600) TM5747
</br>
Marine Prop (3600 only) TM5748
</br>
MSHA : TM6042
</br>
Oil Field (Petroleum) TM6011
</br>
Off-Highway Truck TM6039
</br>
On-Highway Truck TM6038
</br>
</br>

SOUND DEFINITIONS:
Sound Power DM8702
</br>
Sound Pressure TM7080

</br>
</br>
<h5 align="right">Date Released 4/29/15</h5>

Engine Emissions Data

For Emissions feedback and questions submit request form

This emission data is Caterpillar's best estimate for this rating. If actual emissions are required then an emission test needs to be run on your engine.

Serial Number (Machine)	
Serial Number (Engine)	**REH04490**
Sales Model	C9
Build Date	2014-07-01
Interlock Code Progression	No Interlock Code Progression
As Shipped Data	
Engine Arrangement Number	3930595
Certification Arrangement	
Test Spec Number	4150183
Regulatory Status	EPA / ARB Flex (Part 1039)
Regulatory Status	IMO Compliant
Family Code	ACPXL18.1ESK
Emissions Level	Tier 3
Flash File	3790977
Flash File Progression	3790977
CORR FL Power at RPM	300 HP (224.0 KW) at 2200 RPM
Advertised Power	300HP 2,200RPM
Total Displacement	8.8

This is not an official emission certificate. This is for emission data information only.

Caterpillar Confidential: **Green**
Content Owner: Commercial Processes Division
Web Master(s): PSG Web Based Systems Support
Current Date: 7/2/2015. 9:10:40 AM
© Caterpillar Inc. 2015 All Rights Reserved.
Data Privacy Statement.

UNITED STATES ENVIRONMENTAL PROTECTION AGENCY
OFFICE OF TRANSPORTATION AND AIR QUALITY
WASHINGTON, DC 20460

CERTIFICATE OF CONFORMITY
2010 MODEL YEAR

Manufacturer:	CATERPILLAR, INC.
Engine Family:	ACPXL08.8ESK
Certificate Number:	CPX-NRCI-10-22
Intended Service Class:	NR 7 (225-450)
Fuel Type:	DIESEL
FELs:	NMHC +NOx: N/A NOx: N/A PM: N/A
Effective Date:	12/2/2009
Date Issued:	12/2/2009

Karl J. Simon, Director
Compliance and Innovative Strategies Division
Office of Transportation and Air Quality

Pursuant to Section 111 and Section 213 of the Clean Air Act (42 U.S.C. sections 7411 and 7547) and 40 CFR Part 60 and Part 89, and subject to the terms and conditions prescribed in those provisions, this certificate of conformity is hereby issued with respect to the test engines which have been found to conform to applicable requirements and which represent the following stationary and nonroad engines, by engine family, more fully described in the documentation required by 40 CFR Part 60 and 89, and produced in the stated model year.

This certificate of conformity covers only those new stationary and nonroad compression-ignition engines which conform in all material respects to the design specifications that applied to those engines described in the documentation required by 40 CFR Part 60 and 89 and which are produced during the model year stated on this certificate of the said manufacturer, as defined in 40 CFR Part 60 and 89.

It is a term of this certificate that the manufacturer shall consent to all inspections described in 40 CFR 89.129-96 and 89.506-96 and authorized in a warrant or court order. Failure to comply with the requirements of such a warrant or court order may lead to a revocation or suspension of this certificate for reasons specified in 40 CFR Part 89. It is also a term of this certificate that this certificate may be revoked or suspended or rendered void ab initio for other reasons specified in 40 CFR Part 89.

This certificate does not cover stationary and nonroad engines sold, offered for sale, or introduced, or delivered for introduction, into commerce in the U.S. prior to the effective date of the certificate.

California Environmental Protection Agency AIR RESOURCES BOARD	CATERPILLAR INC.	EXECUTIVE ORDER U-R-001-0399 New Off-Road Compression-Ignition Engines

Pursuant to the authority vested in the Air Resources Board by Sections 43013, 43018 43101, 43102, 43104 and 43105 of the Health and Safety Code; and

Pursuant to the authority vested in the undersigned by Sections 39515 and 39516 of the Health and Safety Code and Executive Order G-02-003;

IT IS ORDERED AND RESOLVED: That the following compression-ignition engine and emission control system produced by the manufacturer are certified as described below for use in off-road equipment. Production engines shall be in all material respects the same as those for which certification is granted.

MODEL YEAR	ENGINE FAMILY	DISPLACEMENT (liters)	FUEL TYPE	USEFUL LIFE (hours)
2010	ACPXL08.8ESK	8.8	Diesel	8000

SPECIAL FEATURES & EMISSION CONTROL SYSTEMS	TYPICAL EQUIPMENT APPLICATION
Direct Diesel Injection, Turbocharger, Charge Air Cooler and Engine Control Module	Tractor, Loader Generator and Industrial Equipment

The engine models and codes are attached.

The following are the exhaust certification standards (STD) and certification levels (CERT) for hydrocarbon (HC), oxides of nitrogen (NOx), or non-methane hydrocarbon plus oxides of nitrogen (NMHC+NOx), carbon monoxide (CO), and particulate matter (PM) in grams per kilowatt-hour (g/kw-hr), and the opacity-of-smoke certification standards and certification levels in percent (%) during acceleration (Accel), lugging (Lug) and the peak value from either mode (Peak) for this engine family (Title 13, California Code of Regulations, (13 CCR) Section 2423):

RATED POWER CLASS	EMISSION STANDARD CATEGORY		EXHAUST (g/kw-hr)					OPACITY (%)		
			HC	NOx	NMHC+NOx	CO	PM	ACCEL	LUG	PEAK
130 ≤ KW < 450	Tier 3	STD	N/A	N/A	4.0	3.5	0.20	20	15	50
		CERT	–	–	3.7	3.3	0.18	11	5	15

BE IT FURTHER RESOLVED: That for the listed engine models, the manufacturer has submitted the information and materials to demonstrate certification compliance with 13 CCR Section 2424 (emission control labels), and 13 CCR Sections 2425 and 2426 (emission control system warranty)

Engines certified under this Executive Order must conform to all applicable California emission regulations

This Executive Order is only granted to the engine family and model-year listed above. Engines in this family that are produced for any other model-year are not covered by this Executive Order.

Executed at El Monte, California on this 10 day December 2009

Annette Hebert, Chief
Mobile Source Operations Division

ATTACHMENT 1 OF 1

Engine Model Summary Template

U-R-001-0399
12/02/09

Engine Family	1.Engine Code	2.Engine Model	3.BHP@RPM (SAE Gross)	4.Fuel Rate: mm/stroke @ peak HP (for diesel only)	5.Fuel Rate: (lbs/hr) @ peak HP (for diesels only)	6.Torque @ RPM (SEA Gross)	7.Fuel Rate: mm/stroke@peak torque	8.Fuel Rate: (lbs/hr)@peak torque	9.Emission Control Device Per SAE J1930
ACPXL08.8ESK	Cert Test 3	C9	359@2100	191	135	1248@1400	254	119	~~EGR~~ EM, DI, TC, CAC
ACPXL08.8ESK	Cert Test 2	C9	480@1800	269	162.9	NA	NA	NA	EM, DI, TC,
ACPXL08.8ESK	Cert Test 1	C9	480@1800	265	160	NA	NA	NA	EM, DI, TC,
ACPXL08.8ESK	1	C9	375@1800	209	126.5	1250@1400	246	116.0	EM, DI, TC,
ACPXL08.8ESK	2	C9	330@2100	168	118	1173@1400	227	107	EM, DI, TC,
ACPXL08.8ESK	3	C9	286@2000	153	103	885@1400	181	85	EM, DI, TC,
ACPXL08.8ESK	4	C9	258@2000	138	93	795@1400	162	76	EM, DI, TC,
ACPXL08.8ESK	5	C9	350@2100	178	125.4	1020@1400	208	98.1	EM, DI, TC,
ACPXL08.8ESK	6	C9	228@1850	136	84.5	980@1300	185	80.7	EM, DI, TC,
ACPXL08.8ESK	7	C9	325@2200	162	119.6	1095@1400	222	104.6	EM, DI, TC,
ACPXL08.8ESK	8	C9	330@2100	176	124.6	1173@1400	235	110.6	EM, DI, TC,
ACPXL08.8ESK	9	C9	311@2100	166	117.0	1108@1400	231	109.0	EM, DI, TC,
ACPXL08.8ESK	10	C9	278@2100	147	104.0	988@1400	204	96.0	EM, DI, TC,
ACPXL08.8ESK	11	C9	311@2100	163	115.0	1108@1400	226	108.0	EM, DI, TC,
ACPXL08.8ESK	12	C9	275@2200	139	103.0	927@1400	186	88	EM, DI, TC
ACPXL08.8ESK	13	C9	300@2200	149	110.0	1011@1400	200	94	EM, DI, TC,
ACPXL08.8ESK	14	C9	350@2200	176	130	1148@1400	229	108	EM, DI, TC,
ACPXL08.8ESK	15	C9	480@1800	265	160.0	NA	NA	NA	EM, DI, TC,
ACPXL08.8ESK	16	C9	398@1800	226	137.0	NA	NA	NA	EM, DI, TC,
ACPXL08.8ESK	17	C9	480@1800	265	160.0	NA	NA	NA	EM, DI, TC,
ACPXL08.8ESK	18	C9	398@1800	226	137.0	NA	NA	NA	EM, DI, TC,
ACPXL08.8ESK	19	C9	286@2000	155	104	885@1400	184	87	EM, DI, TC,
ACPXL08.8ESK	20	C9	303@2000	166	112	999@1200	228	92	EM, DI, TC,
ACPXL08.8ESK	21	C9	228@1850	132	82	980@1300	185	85	EM, DI, TC,
ACPXL08.8ESK	22	C9	228@1850	137	85	980@1300	197	90	EM, DI, TC,
ACPXL08.8ESK	23	C9	213@1850	130	81	909@1300	181	79	EM, DI, TC,
ACPXL08.8ESK	24	C9	213@1850	129	80	909@1300	186	82	EM, DI, TC,
ACPXL08.8ESK	25	C9	375@2200	188	139	1230@1400	247	117	EM, DI, TC,

Formula: Screening Area = $\frac{U}{A \times B \times C \times D \times E \times F \times G \times H \times J}$

*Basic Operating Conditions

Feed to screening deck contains 25% oversize and 40% halfsize
Feed is granular free-flowing material
Material weighs 100 lbs. per cu. ft.
Operating slope of screen is: Inclined Screen 18° - 20° with flow rotation
Horizontal Screen 0°
Objective Screening Efficiency—95%

**Furnished by VSMA

U = STPH Passing Specified Aperture

FACTOR "A"

Surface Square Opening	% Open Area	STPH Passing A Sq. Ft.
4"	75%	7.69
3½"	77%	7.03
3"	74%	6.17
2¾"	74%	5.85
2½"	72%	5.52
2"	71%	4.90
1¾"	68%	4.51
1½"	69%	4.20
1¼"	66%	3.89
1"	64%	3.56
⅞"	63%	3.36
¾"	61%	3.08
⅝"	59%	2.82
½"	54%	2.47
⅜"	51%	2.08
¼"	46%	1.60
3/16"	45%	1.27
⅛"	40%	.95
1/32"	45%	.76
1/16"	37%	.58
1/32"	41%	.39

FACTOR "B"
(Percent of Oversize in Feed to Deck)

% Oversize	5	10	15	20	25	30	35
Factor B	1.21	1.13	1.08	1.02	1.00	.96	.92

% Oversize	40	45	50	55	60	65	70
Factor B	.88	.84	.79	.75	.70	.66	.62

% Oversize	75	80	85	90	95
Factor B	.58	.53	.50	.40	.33

FACTOR "C"
(Percent of Halfsize in Feed to Deck)

% Halfsize	0	5	10	15	20	25	30
Factor C	.40	.45	.50	.55	.60	.70	.80

% Halfsize	35	40	45	50	55	60	65
Factor C	.90	1.00	1.10	1.20	1.30	1.40	1.55

% Halfsize	70	75	80	85	90
Factor C	1.70	1.85	2.00	2.20	2.40

FACTOR "D"
(Deck Location)

Deck	Top	Second	Third
Factor D	1.00	.90	.80

FACTOR "E"
(Wet Screening)

Opening	1/32"	1/16"	⅛"	3/16"	¼"	⅜"	½"	¾"	1"
Factor E	1.00	1.25	2.00	2.50	2.00	1.75	1.40	1.30	1.25

FACTOR "F"
(Material Weight)

Lbs./cu.ft.	150	125	100	90	80	75	70	60	50	30
Factor F	1.50	1.25	1.00	.90	.80	.75	.70	.60	.50	.30

FACTOR "G"
(Screen Surface Open Area)

$$\text{Factor "G"} = \frac{\text{\% Open Area of Surface Being Used}}{\text{\% Open Area Indicated in Capacity}}$$

FACTOR "H"
(Shape of Surface Opening)

Square	1.00
Short Slot (3 to 4 times Width)	1.15
Long Slot (More than 4 Times Width)	1.20

FACTOR "J"
(Efficiency)

95%	1.00
90%	1.15
85%	1.35
80%	1.50
75%	1.70
70%	1.90

AMO
As a gu
As a gui
Example:

SCREEN MODEL	TO
8203-38	6
8202-38	6
7203-38	6
7202-38	6
6203-32	6
6202-32	6
6163-32	5
6162-32	5
5163-26	5
5162-26	5
5143-24	4
5142-24	4

20 PSI at Noz
30 PSI at Noz
40 PSI at Noz

8' Spray Pipe
7' Spray Pipe
6' Spray Pipe
5' Spray Pipe

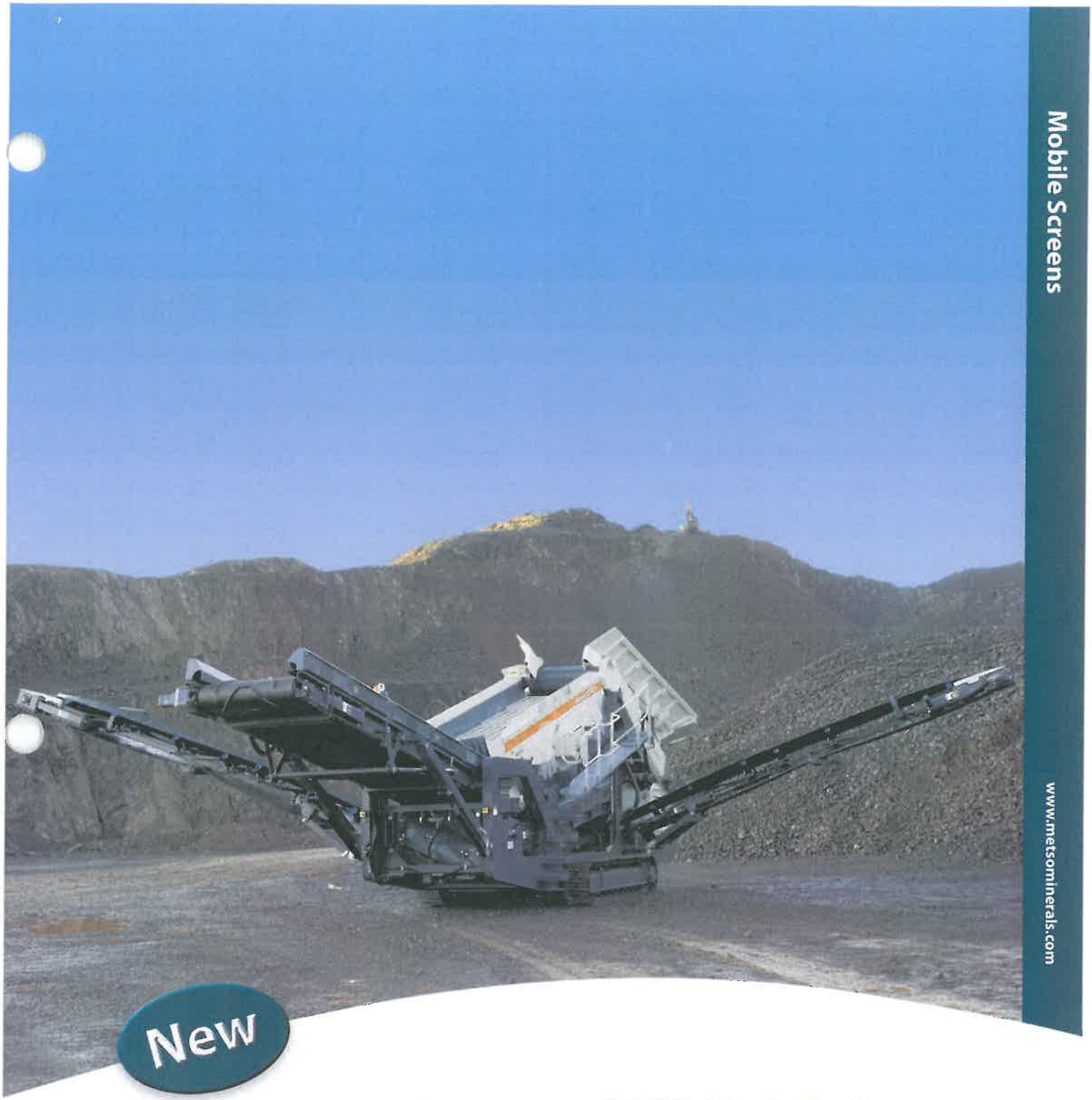

Mobile Screens

www.metsominerals.com

New

Lokotrack ST272 Mobile Screen

metso minerals

Lokotrack ST272 – the new heavy-duty design mobile screen

Metso Minerals, the world leader in rock and mineral processing, unveils the new Lokotrack ST272 track-mounted mobile screen. The ST272 provides the ideal solution for recycling, rock processing and waste screening applications, where high production capacity and efficient screening are required.

The unit is capable of producing three end products and, due to its heavy-duty design, accepts feed material of up to 600 mm (24").

High performance with excellent mobility

The solid construction added to intelligent design of the Lokotrack ST272 offers durability and extended lifetime in demanding, heavy-duty applications. The high performance scalping screen accepts a wide range of screen media options for excellent versatility and flexibility.

The new engine is designed to meet the latest global emission regulations. The higher rated power availability allows the engine to operate well within the recommended load parameters giving durability even in the most difficult applications.

The Lokotrack ST272 is mounted on heavy-duty 400 mm (16") wide hydraulically driven tracks, providing agile on-site mobility and low ground pressure. Optional remote control enables safe and easy relocation on-site.

All conveyors are hydraulically folded and remain on board for transport, minimizing costs. The unit's dimensions enable efficient co-operation with other Metso Minerals crushing and screening equipment. The entire process is optimized via IC automation.

User-friendly IC300 technology

The IC300 intelligent controller offers fully automated control of all machine functions when in screening process mode. Its screen speed, amplitude and conveyor loads are constantly monitored and adjusted, maximizing production rates and end product quality.

A user-friendly interface with a new visual color display enables easy operation, with a one-button process sequence start, and advanced diagnostics for easy maintenance.

Lokotrack ST272 highlights

- ✓ Large two-deck, two-bearing screen with wide range of screening media
- ✓ Highly versatile unit applicable from primary crusher feed preparation to end product screening
- ✓ Ease of use and maximized production, thanks to intelligent automation system
- ✓ Unmatched reliability provides maximum machine availability

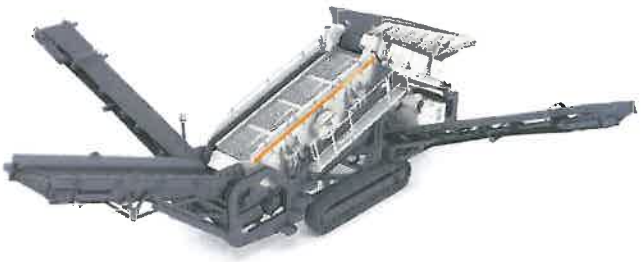

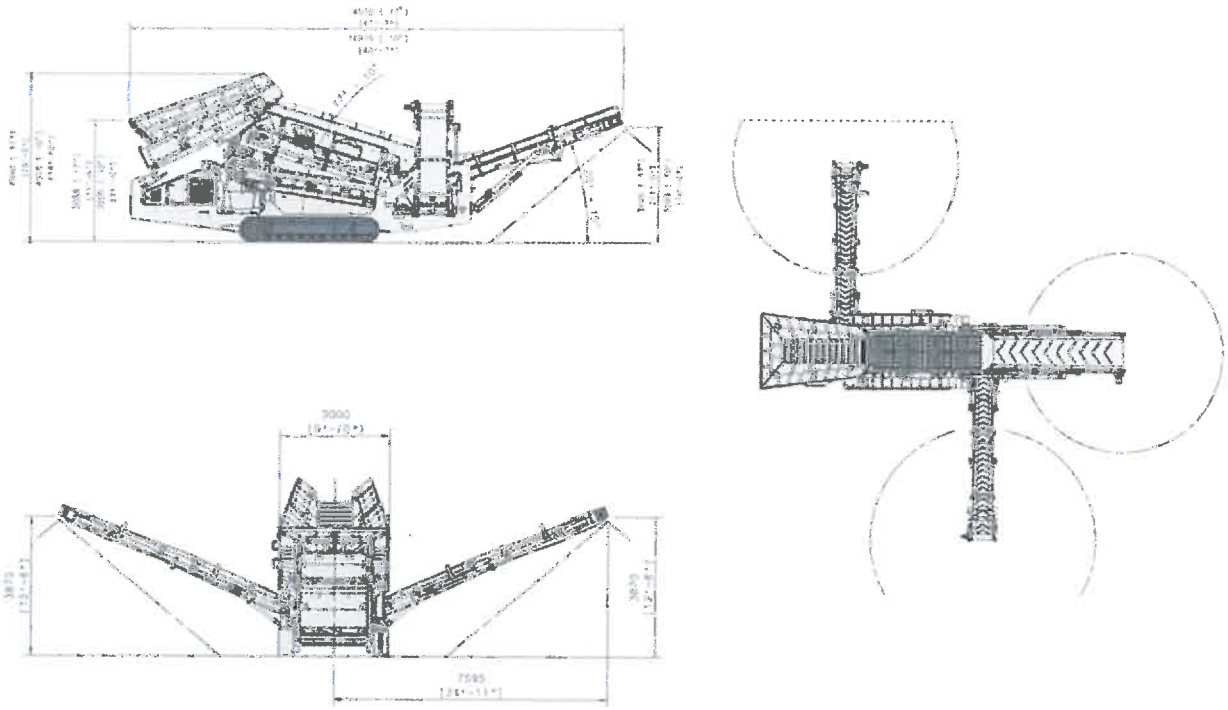

Technical data

Standard features

Screen box
Hydraulic folding hopper
Apron feeder
Heavy-duty tracks
Hydraulic folding conveyors
Maintenance platform
Emergency stop system
Variable speed feeder and conveyors
Remote control of movement
IC300 intelligent control with color display
Powerpack 125 kW (170 HP)

Options

Wide range of screening media
Radio control of movement and process control
LT-ST interlocking cable
Special paint

Specifications

Hopper capacity	4.8 m³	(6.3 yd³)
Loading height	3 565 mm	(11' 8")
Loading width	3 000 mm	(9' 10")
Loading length	4 185 mm	(13' 9")
Screen width	1 524 mm	(5')
Screen length	4 866 mm	(16')
Screen area per deck	6.6 m²	(7.9 yd²)
Screen stroke	11 mm	(0.43")
Screen speed	850 rpm	
Screen angles working	10-17°	
Engine make/model	TCD 2013 L04 2V	
Engine power	125 kW	(170 HP)
Hydraulic tank capacity	431 l	(114 gal)
Diesel fuel capacity	273 l	(72 gal)
Operational length	14 510 mm	(47' 7")
Operational width	15 190 mm	(49' 10")
Operational height	4 940 mm	(16' 2")

Transport dimensions

Length	14 100 mm	(46' 3")
Width	3 000 mm	(9' 10")
Height	3 560 mm	(11' 8")
Weight	34 240 kg	(75 500 lbs)

Metso Minerals Crushing Equipment
Our ranges:

Unit Crushers
C Series jaw crushers
Primary gyratory crushers
GP Series cone crushers
HP Series cone crushers
MP Series cone crushers
NP Series horizontal impact crushers
VI Series vertical impact crushers
Barmac Series vertical impact crushers
Lindemann Series metal crushers
Nordberg laboratory crushers

Mobile Equipment
LT Series mobile crushing plants
NW Series portable plants

Complete Plants
Complete plants for aggregate production
Complete plants for recycling

Metso Minerals Construction
Lokomonkatu 3, P.O. Box 306
33101 Tampere
Finland
Phone: +358 204 84 142
Fax: +358 204 84 143

e-mail: minerals.info.car@metso.com
www.metsominerals.com

Australia and New Zealand
Metso Minerals (Australia) Ltd
1110 Hay Street
West Perth, WA 6005
Australia
Phone: +61 8 9420 5555
Fax: +61 8 9320 2500

China
Metso Minerals (Beijing) Ltd
19/F, The Exchange Beijing, Tower 4,
China Merchants Centre,
No. 118 Jian Guo Lu Yi Chaoyang District
100022 Beijing,
China
Phone: +86 10 6566 6600
Fax: +86 10 6566 2583

India and Asia-Pacific
Metso Minerals (India) Pvt Ltd
1st Floor, DLF Building No. 10,
Tower A, DLF Cybercity
DLF Phase II,
Gurgaon 122002
India
Phone +91 124 235 1541
Fax: +91 124 235 1601

Europe, Middle East and Africa
Metso Minerals España, S.A.
C/ Rivas N° 4
28032 Madrid
Spain
Tel: +34 91 825 5700
Fax: +34 91 825 5740

North and Central America
Metso Minerals Industries Inc.
20965 Crossroads Circle
Waukesha, WI 53186
U.S.A.
Phone: +1 262 717 2500
Fax: +1 262 717 2504

Russia and other CIS countries
ZAO Metso Minerals (CIS)
V.O. Liniya, 70
199178 St. Petersburg
Russia
Phone: +7 812 740 3040
Fax: +7 812 740 5775

South America
Metso Minerals Indústria e Comércio Ltda
Avenida Independência, 2500 - Éden
18087-050 Sorocaba
Brazil
Phone: +55 15 2102 1300
Fax: +55 15 2102 1696

metso minerals

Subject to alteration without prior notice

Brochure 2196-06-08-CBL/Tampere-English

© 2008 Metso Minerals

Printed in Finland

Kirjapaino Hermes

SCREEN MACHINE INDUSTRIES

AN AMERICAN MANUFACTURER OF PORTABLE CRUSHING AND SCREENING EQUIPMENT

4043T IMPACT CRUSHER

10685 COLUMBUS PARKWAY, ETNA, OHIO 43062 USA
1-740-927-3464 800-837-3344 (USA ONLY) WWW.SCREENMACHINE.COM

SCREEN MACHINE INDUSTRIES
4043T IMPACT CRUSHER

OVERVIEW

Screen Machine Industries is a global leader in crushing and screening equipment with manufacturing headquarters located in Columbus, Ohio, USA.

Directionally reversible, 42" wide conveyor with impact bed and guide idlers creates maintenance free material flows

Caterpillar® C-9 300 HP Tier III ACERT engine coupled directly to the crusher through a *Transfluid*® fluid coupling eliminates costly mechanical clutch problems or expensive hydraulic issues

USA Sourced GRADE 80 steel construction for strength and durability

Crossbelt magnet with stainless steel cladding and chutes to prevent magnetic material buildup

Multiple catwalks and lockable access doors create ease of maintenance

Heavy-duty tracked undercarriage with easy to use wireless remote control allowing for quick and efficient setup and operation

Industry unique and patented ***Remote Controlled Crusher Relief System*** clears blockages and maximizes productivity

Specifications Subject To Change Without Notice

KEY FEATURES

CRUSHER

- 40" (1.02m) x 43" (1.09m) horizontal impact crusher
  - Years of proven engineering and design reliability
- Large 43" wide (1.09m) x 32" (.81m) high feed inlet opening
- Variable speed control from 600-700 rpm
- Two fully adjustable aprons
  - For multi-stage crushing
- Remote *Crusher Relief System* (U.S. Patent # 7,229,041)
- Low chrome ceramic reversible blow bars (standard)
  - Optional high chrome ceramic or low chrome steel blow bars
- 4 bar rotor design
  - 2 active low chrome ceramic bars & 2 inactive low chrome steel "dummy bars"

Visit www.screenmachine.com to view working jobsite videos of the 4043T Impact Crusher

CRUSHER RELIEF SYSTEM

- Raise and lower of crusher lid and attached aprons
- Crusher lid operated by remote control
- Hydraulically raise crusher lid up to 6" during full operation
  - Effectively clears marginally oversized and bridged materials (raise opening from 32" to 38")
  - Eliminates the need to reduce feed volume for fear of material bridging
- U.S. Patent # 7,229,041

PATENT 7,229,041

As the lid lifts up, the increase in opening height will dislodge most bridged materials that otherwise would completely shut-down production for a significant period of time.

The entire crusher lid with attached aprons can raise during operation.

Two hydraulic cylinders raise the crusher lid relative to the rotor.

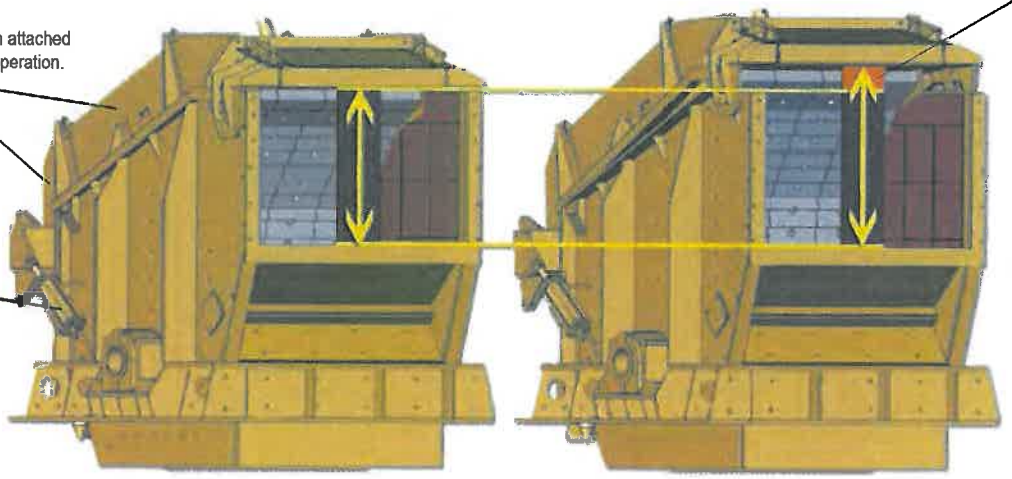

Operating Position *Blockage Clearance*

Multiple safety features including sensors, mechanical stops and material guards guarantee safe operation.

SCREEN MACHINE INDUSTRIES
4043T IMPACT CRUSHER

ENGINE

- Power supplied by a Caterpillar® C9 300 HP Tier III ACERT diesel engine
- Electronic control of engine speed ranges from 1800 to 2200 rpm
- 6 cylinder water-cooled with 4 Murphy® shut-downs
- Large, lockable engine compartment with easy walk-in maintenance access
  - Provides ease of maintenance on all service access points
- 175 gallon (663 liter) fuel tank and 105 gallon (398 liter) hydraulic tank
  - Hydraulic cooler maintains a cool running hydraulic system

FLUID COUPLING

- Transfluid® fluid coupling
  - Provides smooth startup and shutdown operations of crusher without the risk of excessive wear or catastrophic failure
- Designed to permit instantaneous crusher stoppage due to steel or other large uncrushable material
  - Slips fluid on fluid, causing no wear, unlike mechanical clutches.
  - Operator can uniquely disengage the crusher, move the machine and re-engage the crusher as quickly as you can read this

UNDERCARRIAGE

- The 4043T impact crusher utilizes a heavy-duty tracked undercarriage
  - Ensuring long term reliability, world-wide parts availability and product support
- Track operation is controlled from a safe distance
  - Wireless remote control handset used for movement and operation
  - Low speed for maneuvering and high speed for long distance travel
- 24" (600 mm) wide pads create low ground pressure

STRUCTURE

- Massive unibody structure features unrivaled deep frame design
  - Unibody frame handles the high stresses of uneven loading during operation and rough terrain during movement
- USA sourced Grade 80 steel construction
  - High strength wear resistant steel ensures long life structural integrity to address the most demanding jobsite applications
- Elevated frame design equates to rapid deployment and set up
  - 8" ground clearance uniquely eliminates the need for any machine disassembly or site preparation prior to movement

REMOTE OPERATING SYSTEM & CONTROL PANEL

- Cattron® wireless remote control with 300 ft. (91m) range
  - Variable speed feeder with feeder shutoff
  - Crusher relief system
  - Full track motion and speed (high and low)
  - Movement left, right, forward and backward
  - Engine shutoff control button
- Wireless remote means never leaving the safety of the loader cab to reposition the 4043T and resume material processing
- Detailed control panel allows for ease of operation
- Four emergency stops mounted on machine for safety
- Optional Tethered Pendant Movement

FEEDER

- 40"x13'-0" (1m x 4m) vibratory grizzly feeder
- 14'-0" (4.3m) long feed hopper opening
- Fixed hopper allows for quick setup and teardown
  - No folding hopper walls to manipulate
- Grade 80 steel hopper wall construction
- AR400 replaceable liner plates on feeder deck
- T1 tapered grizzly bars for pre-screening
- Variable speed feeder range from 600 to 900 rpm
- Sheave drive allows hydraulic motor to work in optimal speed range, resulting in long life of motor
  - Hydraulic motor is protected from falling debris and loaders

MAGNET

- Cross-belt permanent magnet
  - Four corner rachet adjustment for raise and lower
- Reversible direction
- Heavy-duty belt with armor plating and flights for extended belt life
- Stainless steel chutes on both sides of the conveyor
  - Prevents magnetic material build-up
- Impact bed under magnet for optimal controlled performance
- Variable speed magnet belt

Specifications Subject To Change Without Notice

SCREEN MACHINE INDUSTRIES
4043T IMPACT CRUSHER

CONVEYORS

- Main belt:
  - 42" (1.07m) wide 440 PIW Global® belt
  - 10'-9" (3.28m) main belt discharge height, reversible in direction
  - Precision® head & tail pulleys with spherical roller bearings
  - Martin Engineering® belt scraper for optimum cleaning
  - Large Dodge® reducer with hydraulic drive motor
  - Impact bed below crusher discharge prevents belt wear
  - Rubber disc return rollers and guide idlers on all belts
- Side stacker:
  - Fines side conveyor with 24" (600mm) 220 PIW belt
  - 7'-0" (2.11m) discharge height
  - Crusher bypass lever allows for optional fines removal
- Optional dust suppression system

SERVICEABILITY

- Split crusher housing for complete maintenance access
- Multiple non-slip platforms with ladders
- Key lock doors to service locations and tool storage compartment
- Service manuals in book form or electronic format
- Rapid response parts availability
- Free lifetime telephone and email technical support

Service Position

SPYDER 512T

For more information about the Spyder 512T visit www.screenmachine.com

Screen Machine Industries' Spyder 512T is a perfect match to the 4043T Impact Crusher. This wireless remote controlled 3-way split screening plant satisfies the need for a heavy-duty machine to process large volumes in the most demanding applications. This unit can operate alone, or in tandem with the 4043T Impact Crusher (as shown below).

Features include:

- Patented overall machine design allows loaders to uniquely feed from 3 sides of the feeder while maintaining a safe distance from conveyors and stockpiles
- Massive structural components manufactured from Grade 80 USA Steel for superior durability
- Leading brand name components to ensure peace of mind investment
- Impacts beds and apron feeders support severe duty applications
- Straight pass through design engineered to process large oversize materials
- 5'x12' (1.5m x 3.7m) double deck shaker screen uses patented ***Smooth Start®*** technology

PATENT 6,669,026

PATENT 6,698,594

Spyder 512T is covered by US patents 6,669,026 and 6,698,594

SCREEN MACHINE INDUSTRIES
4043T IMPACT CRUSHER

OPERATING DIMENSIONS

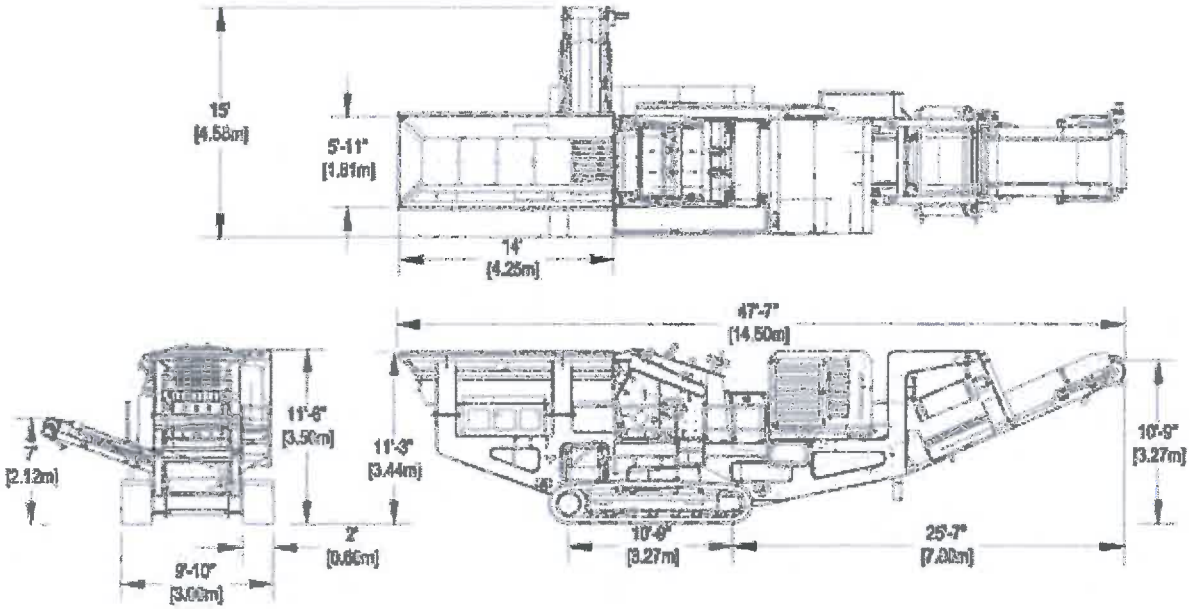

TRANSPORTATION DIMENSIONS

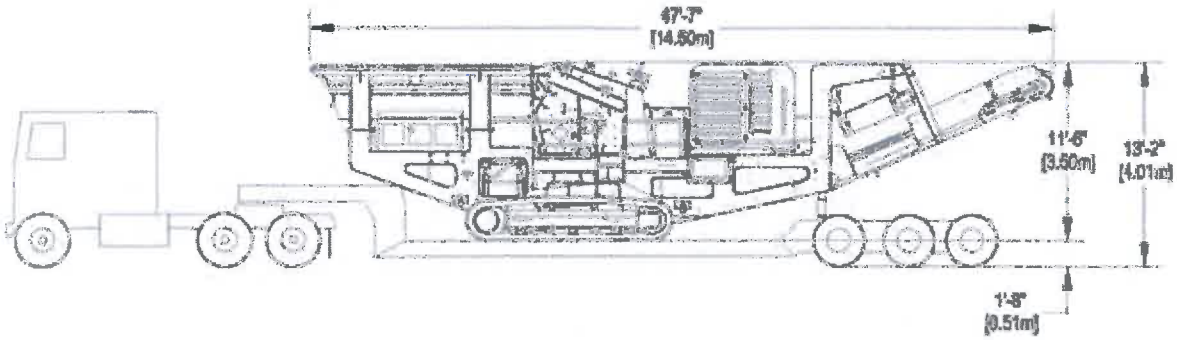

Length: 47'-7" [14.15m]
Width: 9'-10' [3.00m]
Height: 11'-6" [3.50m]
Weight: 79,500 lbs
[36,061 kgs]

DESIGNED FOR EASE OF TRANSPORT TO JOB SITE

Specifications Subject to Change Without Notice

SCREEN MACHINE INDUSTRIES

AN AMERICAN MANUFACTURER OF PORTABLE CRUSHING AND SCREENING EQUIPMENT

Screen Machine Industries LLC is an innovative American manufacturer of portable machinery dedicated to material crushing, screening and stockpiling. Our product offering provides solutions ranging from 15-600 tons/yards per hour across a vast array of applications (such as sand & gravel, concrete & asphalt, topsoil & compost products). Our successful engineering philosophy is to incorporate reliable brand name components and industry leading features with the highest quality manufacturing techniques. This philosophy has prominently driven our success since 1966.

Screen Machine Industries LLC Corporate Headquarters

The manufacturing process includes the utilization of CNC fabrication equipment, robotic welders, advanced painting facilities and highly skilled mechanical technicians assembling these machines. Multiple levels of quality control and thorough run-time inspections are in place to ensure the quality and reliability that we demand and that you expect.

Screen Machine Industries LLC continues to make substantial investments in research and development. Our highly skilled engineers combined with the latest computer technology, create the most innovative products in the crushing and screening industries. Numerous U.S. Patents have been awarded as a result of our creative ambition in developing machinery that we feel is superior to any in the industry. We also strive to add the best design engineers available to our organization. Our engineers are graduates of MIT and other prestigious universities throughout the United States.

Our diverse product line consists of heavy-duty, track-mounted Jaw, Cone and Impact Crushers, Spyders, Scalpers, Trommels and Conventional Screening and Shredding Plants. Our portable stacking conveyors complete the product lineup with sizes available to fit most every job.

SCALPER 107T

612T TROMMEL

MULTIPLE US PATENTS

SCALPER 77C

SCALPER 107D

JXT/JHT JAW CRUSHER

SCREEN MACHINE INDUSTRIES LLC
10685 Columbus Parkway
Etna, Ohio 43062 USA
1-740-927-3464 800-837-3344 (USA Only)
Email@screenmachine.com
www.screenmachine.com

DISTRIBUTED BY:

Attachment "A"

CUSTOMER J.F. Allen

DATE: 06/17/16

GENCOR INDUSTRIES INC.

SIZE ULTRA-PLANT	300	TPH	BURNER FIRING RATE	79.03 MMBTU'S/HR
FINAL MIX TEMPERATURE	300	F	ENERGY REQUIRED:	263433 BTU'S/TON
VIRGIN MOISTURE	5.0	%		
TOTAL T.P.H. MIX	300			
PLANT ELEVATION	100	FEET	ACFM thru Dryer@ 325	45,945 ACFM
DRYER OUTLET TEMP.	325	F	R.A.P. STEAM GENERATED	3050 ACFM
DRUM DIAMETER	8.58	FEET	PLANT AIR LEAKAGE (10 %)STD.	5,105 ACFM
OXYGEN IN DRYER	7.5	%	BAGHOUSE CLEANING AIR	8,000 ACFM
EXCESS AIR IN DRYER	50	%	ACFM REQ. for Baghouse & fan	55,289 ACFM
PERCENT R.A.P.	20.0	%	TOTAL ACFM@STACK EXIT TEMP	55,289 ACFM
TOTAL T.P.H. OF R.A.P.	60	T.P.H.	STACK EXIT TEMP 275	
MOISTURE IN R.A.P.	5.0	%		
VIRGIN AGG. TEMPERATURE	444	(OK)	DRUM VELOCITY EMPTY	795 FPM
ACFM OF R.A.P. STEAM	3050	(OK)	DRUM VELOCITY RUNNING	984 FPM
GAS FLOW PER TON (DRYER)	153	ACFM		

FUEL USAGE

NATURAL GAS:

HEAT CONTENT:	1,000 BTU'S/FT^3
FUEL CONSUMPTION	79,029.9 FT^3/HR
FUEL CONSUMPTION	2.63 THERM/TON
FUEL CONSUMPTION	92.20 MMCF/YR

Waste oil:

HEAT CONTENT:	145000 BTU'S/GAL
FUEL CONSUMPTION	9.08 GAL/MIN
FUEL CONSUMPTION	545.03 GAL/HR
FUEL CONSUMPTION	1.82 GAL/TON
FUEL CONSUMPTION	635,873 GAL/YR

LIQUID PROPANE:

HEAT CONTENT:	91500 BTU'S/GAL
FUEL CONSUMPTION	14.40 GAL/MIN
FUEL CONSUMPTION	863.71 GAL/HR
FUEL CONSUMPTION	2.88 GAL/TON
FUEL CONSUMPTION	1,007,667 GAL/YR

Attachment "B"

CUSTOMER: **J.F. Allen** DATE 06/17/16

SIZE OF PLANT:	300.0	TONS PER HOUR
HOURLY PRODUCTION:	300.0	TONS PER HOUR
DIAMETER OF DRYER:	8.58	FEET
LENGTH OF DRYER:	44.0	FEET
PITCH OF DRYER (.75 INCH TYPICAL)	0.75	INCH PER FOOT
DRYER SPEED:	7.42	R.P.M.
DRYER SHELL SPEED:	200.0	FEET PER MINUTE
DRUM LOAD IN CUBIC FEET:	11.14	CUBIC FEET
DRUM LOAD IN PERCENT:	19.3	PERCENT
MATERIAL DEPTH IN DRYER:	25	INCHES
% OF -200 IN COLD FEED (5% TYPICAL)	5.0	PERCENT
CALCULATED RETENTION TIME:	4.90	MINUTE
DUST LOAD IN AIR AT DRYER OUTLET:	23,357	LBS. PER HOUR
PERCENT OF DUST PICKUP AT DRYER OUTLET:	4.10	PERCENT
EXHAUST STACK INSIDE DIAMETER:	54.0	INCHES
SIZE BAGHOUSE	CFS144	BAGHOUSE

TYPE OF PRIMARY INERTIAL INERTIAL YES CYCLONE NO

MICRON SIZE	PERCENT IN AIR STREAM (%)	LOAD IN AIR STREAM (lbs./hr)	PERCENT PASSING PRIMARY (%)	LOAD IN AIR STREAM (lbs./hr)	PERCENT PASSING BAGHOUSE (%)	LOAD IN AIR STREAM (lbs./hr)
0.1	0.6	128.46	100.00	128.46	0.679	0.87
1.0	0.6	140.14	100.00	140.14	0.339	0.48
2.0	1.6	362.03	99.00	358.41	0.170	0.61
3.0	3.7	864.19	99.00	855.55	0.085	0.73
4.0	4.1	957.62	99.00	948.04	0.042	0.40
5.0	4.0	934.26	99.00	924.92	0.021	0.20
6.0	3.5	817.48	99.00	809.30	0.011	0.09
7.0	3.5	817.48	99.00	809.30	0.005	0.04
8.0	3.0	700.70	99.00	693.69	0.003	0.02
9.0	2.5	583.91	98.00	572.24	0.001	0.01
10.0	2.5	583.91	98.00	572.24		
20.0	7.5	1751.74	56.00	980.98	+PM10	
30.0	11.0	2569.22	51.00	1310.30	0.07	6.4
40.0	8.5	1985.31	45.00	893.39		
50.0	6.5	1518.18	44.00	668.00		
60.0	5.5	1284.61	43.00	552.38		
70.0	4.5	1051.05	42.00	441.44		
+70	27.0	6306.27	40.0	2522.51		
TOTAL (LBS./HR):		23356.6 (lbs./hr)		14181.3 (lbs./hr)		9.82 (lbs./hr)

	PRIMARY COLLECTOR	BAGHOUSE
EFFICIENCY (%)	39.3 (%)	99.931 (%)

TOTAL EFFICIENCY (%)

PRIMARY COLLECTOR & BAGHOUSE

99.95795 (%)

Attachment "C"

CUSTOMER: **J.F. Allen** DATE 06/17/16

ANNUAL PRODUCTION:	350,000	Tons/Year
HOURLY PRODUCTION:	300	Tons/Hour
EXHAUST GASES - TEMPERATURE	275	Degree (F)
EXHAUST GASES - % MOISTURE	26.76	%
EXHAUST GASES - FLOW RATE	55,289	ACFM
EXHAUST GASES - FLOW RATE	39,868	SCFM
EXHAUST GASES - FLOW RATE	28,647	DSCFM
EXHAUST GASES- VELOCITY	3,476	FT/MIN
OXYGEN PERCENT by VOLUME	11.36	%
PARTICULATE EMISSIONS	5.7	TON/YEAR
PARTICULATE EMISSIONS	9.82	LBS/HOUR
PARTICULATE EMISSIONS	0.033	LBS/TON
PARTICULATE EMISSIONS	0.124	LBS/MMBTU
BAGHOUSE EFFICIENCY	99.931	%
BAGHOUSE INLET LOADING	14,181	LBS/HOUR
PERCENT OF BAGHOUSE INLET LOADING	2.49	%
BAGHOUSE OUTLET EMISSION RATE	0.040	GRAINS/DSCF
BAGHOUSE OUTLET EMISSION RATE	0.029	GRAINS/SCF
OVERALL EFFICIENCY (PRIMARY+BAGHOUSE)	99.958	%

***Emission Factors are from AP-42 Section 11.1 Final Report**

PPM @ 7 OXYGEN	Gas		No. 2 oil	
CARBON MONOXIDE (CO):	22.8	TONS/YEAR	22.8	TONS/YEAR
CARBON MONOXIDE (CO):	39.0	LBS/HOUR	39.0	LBS/HOUR
CARBON MONOXIDE (CO):	509	PPM GAS	483	PPM OIL
CARBON MONOXIDE (CO):	0.13	*LBS/TON	0.13	*LBS/TON
CARBON MONOXIDE (CO):	0.493	LBS/MMBTU	0.493	LBS/MMBTU
**VOLATILE ORGANIC COMPOUNDS (VOC):	5.600	TONS/YEAR	5.600	TONS/YEAR
**VOLATILE ORGANIC COMPOUNDS (VOC):	9.60	LBS/HOUR	9.60	LBS/HOUR
**VOLATILE ORGANIC COMPOUNDS (VOC):	218	PPM GAS	207	PPM OIL
**VOLATILE ORGANIC COMPOUNDS (VOC):	0.0320	*LBS/TON	0.0320	*LBS/TON
**VOLATILE ORGANIC COMPOUNDS (VOC):	0.121	LBS/MMBTU	0.121	LBS/MMBTU
** (VOC) as Methane				
NITROGEN OXIDES (NOx):	4.550	TONS/YEAR	9.625	TONS/YEAR
NITROGEN OXIDES (NOx):	7.800	LBS/HOUR	16.500	LBS/HOUR
NITROGEN OXIDES (NOx):	62	PPM GAS	125	PPM OIL
NITROGEN OXIDES (NOx):	0.0260	*LBS/TON	0.0550	*LBS/TON
NITROGEN OXIDES (NOx):	0.0987	LBS/MMBTU	0.209	LBS/MMBTU
***SULFUR OXIDES (SOx):	0.595	TONS/YEAR	10.150	TONS/YEAR
***SULFUR OXIDES (SOx):	1.020	LBS/HOUR	17.400	LBS/HOUR
***SULFUR OXIDES (SOx):	6	PPM GAS	92	PPM OIL
***SULFUR OXIDES (SOx):	0.0034	*LBS/TON	0.0580	*LBS/TON
***SULFUR OXIDES (SOx):	0.0129	LBS/MMBTU	0.220	LBS/MMBTU
*** SOx as SO2				

Note: EGR may be required to meet NOx requirements

Attachment "D"

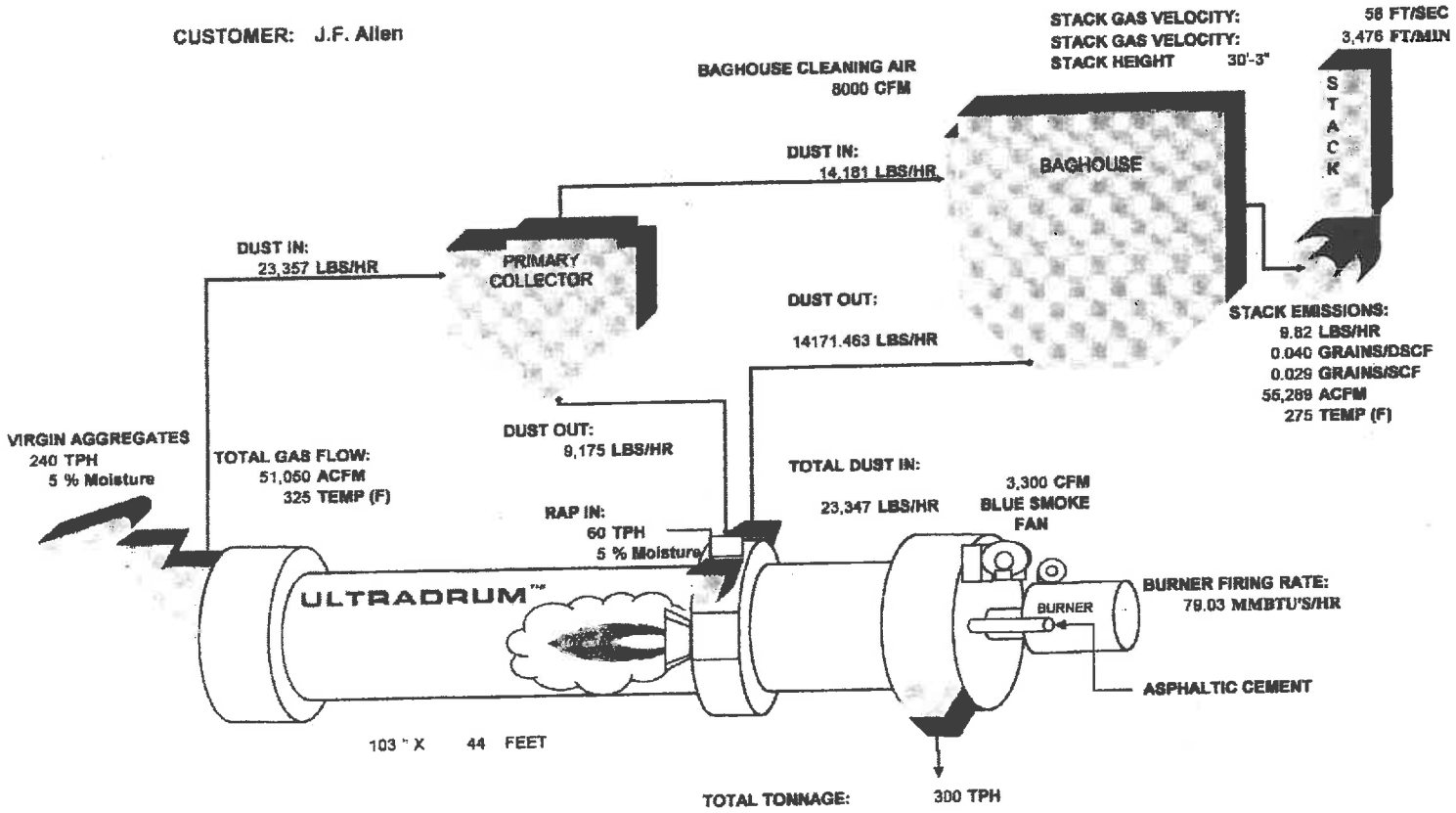

ATTACHMENT N

SUPPORTING EMISSIONS CALCULATIONS Δ

INPUTS

Include all information for each emission source and transfer point as listed in the permit application.

Name of applicant: J.F. Allen Company
Name of plant: McAlpin Site

1. CRUSHING AND SCREENING (including all primary and secondary crushers and screens)

1a. PRIMARY CRUSHING

Primary Crusher ID Number	Description	Maximum Material Processing Capacity TPH	Maximum Material Processing Capacity TPY	Control Device ID Number	Control Efficiency %
C1	PORTABLE CRUSHER	166	90,000	C1	80

1b. SECONDARY AND TERTIARY CRUSHING

Secondary & Tertiary Crusher ID	Description	Maximum Material Processing Capacity TPH	Maximum Material Processing Capacity TPY	Control Device ID Number	Control Efficiency %

1c. SCREENING

Secondary & Tertiary Crusher ID	Description	Maximum Material Processing Capacity TPH	Maximum Material Processing Capacity TPY	Control Device ID Number	Control Efficiency %
S1	DOUBLE DECK SCREEN	300	75,000	S1	80
S2	DEISTER SCREEN	90	25,000	S2	80
S3	PORTABLE SCREEN	240	25,000	S3	80

2. *TRANSFER POINTS (including all conveyor transfer points, equipment transfer points etc.)*

		PM	PM-10
k =	Particle Size Multiplier (dimensionless)	0.74	0.35
U =	Mean Wind Speed (mph)	7	

Transfer Point ID No.	Transfer Point Description Include ID Numbers of all conveyors, crushers, screens, stockpiles, etc. involved	Material Moisture Content %	Maximum Transfer Rate TPH	Maximum Transfer Rate TPY	Control Device ID Number	Control Efficiency %
TP1	TRUCK to OSP1	2	24	12,600	NA	0
TP2	TRUCK to OSP2	2	24	12,600	NA	0
TP3	TRUCK to OSP3	2	12	6,300	NA	0
TP4	TRUCK to OSP4	2	12	6,300	NA	0
TP5	TRUCK to OSP5	2	12	6,300	NA	0
TP6	TRUCK to OSP6	2	12	6,300	NA	0
TP7	TRUCK to OSP7	2	24	12,600	NA	0
TP8	TRUCK to OSP8	2	24	12,600	NA	0
TP9	TRUCK to OSP9	2	24	12,600	NA	0
TP10	TRUCK to OSP10	2	24	12,600	NA	0
TP11	TRUCK to OSP11	2	48	11,200	NA	0
TP12	TRUCK to OSP12	2	40	21,000	NA	0
TP13	TRUCK to OSP13	2	40	21,000	NA	0
TP14	TRUCK to OSP14	2	19	10,000	NA	0
TP15	TRUCK TO OSP15	2	19	10,000	NA	0
TP16	TRUCK TO OSP16	2	58	30,000	NA	0
TP17	TRUCK TO OSP17	2	58	30,000	NA	0
TP18	TRUCK TO OSP18	2	58	30,000	NA	0
TP19	ENDLOADER to COLD AGG BIN	2	13	25,200	NA	0
TP20	ENDLOADER to COLD AGG BIN	2	13	25,200	NA	0
TP21	ENDLOADER to COLD AGG BIN	2	13	25,200	NA	0
TP22	ENDLOADER to COLD AGG BIN	2	13	25,200	NA	0
TP23	ENDLOADER to COLD AGG BIN	2	10	21,000	NA	0
TP24	ENDLOADER to COLD AGG BIN	2	10	21,000	NA	0
TP25	ENDLOADER to RAP BIN	2	45	90,000	NA	0
TP26	ENDLOADER to RAP BIN	2	85	168,000	NA	0
TP27	COLD AGG BIN to BC1 BELT	2	85	168,000	NA	0
TP28	BC1 to S1 SCREEN	2	85	168,000	NA	0
TP29	S1 SCREEN to BC2 BELT	2	8	16,186	PE1	50
TP30	COLD RAP BIN to BC4 BELT	2	8	16,186	FE1	80
TP31	BC4 BELT to S2 SCREEN	2	8	16,186	FE2	80
TP32	S2 SCREEN to BC5 BELT	2	8	16,186	FE3	80
TP33	BC5 BELT to BC6 BELT	2	8	16,186	FE4	80
TP34	BC3 BELT to TRUCK	2	8	16,186	FE5	80
TP35	BC3 BELT to SILO	2	300	168,000	FE6	80
TP36	BC3 BELT to SILO	2	300	168,000	FE7	80
TP37	BC3 BELT to SILO	2	300	168,000	FE8	80
TP38	BC3 BELT to SILO	2	300	168,000	FE9	80

3. WIND EROSION OF STOCKPILES (including all stockpiles of raw coal, clean coal, coal refuse, etc.)

p =	number of days per year with precipitation >0.01 inch	157
f =	percentage of time that the unobstructed wind speed exceeds 12 mph at the mean pile height	20

Source ID No.	Stockpile Description	Silt Content of Material %	Stockpile base area Max. sqft	Control Device ID Number	Control Efficiency %
OSP1	LIMESTONE 4	2	5,000	PE2	50
OSP2	LIMESTONE 4	2	5,000	PE3	50
OSP3	LIMESTONE 57	2	10,000	PE4	50
OSP4	LIMESTONE 57	2	10,000	PE5	50
OSP5	LIMESTONE 67	2	10,000	PE6	50
OSP6	LIMESTONE 67	2	10,000	PE7	50
OSP7	LIMESTONE 8	2	15,000	PE8	50
OSP8	LIMESTONE 8	2	15,000	PE9	50
OSP9	LIMESTONE 9	2	12,000	PE10	50
OSP10	LIMESTONE 9	2	12,000	PE11	50
OSP11	LIMESTONE 1.5	2	10,000	PE12	50
OSP12	SAND	2	4,550	PE13	50
OSP13	SAND	2	4,550	PE14	50
OSP14	LIMESTONE 1	2	6,000	PE15	50
OSP15	LIMESTONE 3	2	6,000	NA	0
OSP16	RAP	2	3,000	NA	0
OSP17	RAP	2	6,000	NA	0
OSP18	RAP CRUSHED	2	3,000	NA	0

4. UNPAVED HAULROADS (including all equipment traffic involved in process, haul trucks, endloaders, etc.)

s =	silt content of road surface material (%)	10
p =	number of days per year with precipitation >0.01 inch	157
M_{dry} =	surface material moisture content (%) - dry conditions	0.2

Item Number	Description	Number of wheels	Mean Vehicle Weight(tons)	Mean Vehicle Speed (mph)	Miles per Trip	Maximum Trips Per Hour	Maximum Trips Per Year	Control Device ID Number	Control Efficiency %
1									
2									
3									
4									
5									
6									
7									
8									

5. INDUSTRIAL PAVED HAULROADS (including all equipment traffic involved in process, haul trucks, endloaders, etc.)

sL =	road surface silt loading, (g/ft^2)	70
P =	number of days per year with precipitation >0.01 inch	157

Item Number	Description	Mean Vehicle Weight (tons)	Miles per Trip	Maximum Trips Per Hour	Maximum Trips Per Year	Control Device ID Number	Control Efficiency %
1	18 WHEEL TRUCK TRACTOR	44	0.41	2	1,658	WS1	70
2	ENDLOADER	32.8	0.02	9	18,850	NA	0
3	14 WHEEL TRUCK TRI	38.5	0.17	3	3,125	WS1	70
4	18 WHEEL TRUCK QUAD	40.1	0.17	3	3,125	WS1	70
5							
6							
7							
8							

EMISSIONS SUMMARY

Name of applicant: J.F. Allen Company
Name of plant: McAlpin Site

Particulate Matter or PM (for 45CSR14 Major Source Determination)

	Uncontrolled PM		Controlled PM	
	lb/hr	TPY	lb/hr	TPY
FUGITIVE EMISSIONS				
Stockpile Emissions	0.38	1.65	0.21	0.93
Unpaved Haulroad Emissions	0.00	0.00	0.00	0.00
Paved Haulroad Emissions	74.49	37.71	25.71	14.83
Fugitive Emissions Total	**74.86**	**39.36**	**25.92**	**15.76**
POINT SOURCE EMISSIONS				
Equipment Emissions	16.08	1.65	3.22	0.33
Transfer Point Emissions	7.89	3.25	4.24	2.13
Point Source Emissions Total*	**23.97**	**4.90**	**7.46**	**2.46**
*Note: Point Source Total Controlled PM TPY emissions is used for 45CSR14 Major Source determination (see below)				
Facility Emissions Total	**98.84**	**44.26**	**33.38**	**18.21**

***Facility Potential to Emit (PTE) (Baseline Emissions) = 2.46**

(Based on Point Source Total controlled PM TPY emissions from above) **ENTER ON LINE 26 OF APPLICATION**

Particulate Matter under 10 microns, or PM-10 (for 45CSR30 Major Source Determination)

	Uncontrolled PM-10		Controlled PM-10	
	lb/hr	TPY	lb/hr	TPY
FUGITIVE EMISSIONS				
Stockpile Emissions	0.18	0.77	0.10	0.43
Unpaved Haulroad Emissions	0.00	0.00	0.00	0.00
Paved Haulroad Emissions	14.53	7.36	5.02	2.89
Fugitive Emissions Total	**14.71**	**8.13**	**5.12**	**3.33**
POINT SOURCE EMISSIONS				
Equipment Emissions	5.65	0.59	1.13	0.12
Transfer Point Emissions	3.73	1.53	2.01	1.01
Point Source Emissions Total*	**9.38**	**2.12**	**3.13**	**1.12**
*Note: Point Source Total Controlled PM-10 TPY emissions is used for 45CSR30 Major Source determination				
Facility Emissions Total	**24.09**	**10.26**	**8.25**	**4.45**

1. Emissions From CRUSHING AND SCREENING

1a. Primary Crushing

Primary Crusher ID Number	PM				PM-10			
	Uncontrolled		Controlled		Uncontrolled		Controlled	
	lb/hr	TPY	lb/hr	TPY	lb/hr	TPY	lb/hr	TPY
C1	0.332	0.090	0.066	0.018	0.166	0.045	0.033	0.009
0	0.000	0.000	0.000	0.000	0.000	0.000	0.000	0.000
0	0.000	0.000	0.000	0.000	0.000	0.000	0.000	0.000
0	0.000	0.000	0.000	0.000	0.000	0.000	0.000	0.000
0	0.000	0.000	0.000	0.000	0.000	0.000	0.000	0.000
TOTAL	0.332	0.090	0.066	0.018	0.166	0.045	0.033	0.009

1b. Secondary and Tertiary Crushing

Secondary & Tertiary Crusher ID	PM				PM-10			
	Uncontrolled		Controlled		Uncontrolled		Controlled	
	lb/hr	TPY	lb/hr	TPY	lb/hr	TPY	lb/hr	TPY
0	0.000	0.000	0.000	0.000	0.000	0.000	0.000	0.000
0	0.000	0.000	0.000	0.000	0.000	0.000	0.000	0.000
0	0.000	0.000	0.000	0.000	0.000	0.000	0.000	0.000
0	0.000	0.000	0.000	0.000	0.000	0.000	0.000	0.000
0	0.000	0.000	0.000	0.000	0.000	0.000	0.000	0.000
0	0.000	0.000	0.000	0.000	0.000	0.000	0.000	0.000
0	0.000	0.000	0.000	0.000	0.000	0.000	0.000	0.000
0	0.000	0.000	0.000	0.000	0.000	0.000	0.000	0.000
0	0.000	0.000	0.000	0.000	0.000	0.000	0.000	0.000
0	0.000	0.000	0.000	0.000	0.000	0.000	0.000	0.000
0	0.000	0.000	0.000	0.000	0.000	0.000	0.000	0.000
0	0.000	0.000	0.000	0.000	0.000	0.000	0.000	0.000
TOTAL	0.000	0.000	0.000	0.000	0.000	0.000	0.000	0.000

1c. Screening

Screen ID Number	PM				PM-10			
	Uncontrolled		Controlled		Uncontrolled		Controlled	
	lb/hr	TPY	lb/hr	TPY	lb/hr	TPY	lb/hr	TPY
S1	7.500	0.938	1.500	0.188	2.610	0.326	0.522	0.065
S2	2.250	0.313	0.450	0.063	0.783	0.109	0.157	0.022
S3	6.000	0.313	1.200	0.063	2.088	0.109	0.418	0.022
0	0.000	0.000	0.000	0.000	0.000	0.000	0.000	0.000
0	0.000	0.000	0.000	0.000	0.000	0.000	0.000	0.000
0	0.000	0.000	0.000	0.000	0.000	0.000	0.000	0.000
0	0.000	0.000	0.000	0.000	0.000	0.000	0.000	0.000
0	0.000	0.000	0.000	0.000	0.000	0.000	0.000	0.000
0	0.000	0.000	0.000	0.000	0.000	0.000	0.000	0.000
0	0.000	0.000	0.000	0.000	0.000	0.000	0.000	0.000
0	0.000	0.000	0.000	0.000	0.000	0.000	0.000	0.000
0	0.000	0.000	0.000	0.000	0.000	0.000	0.000	0.000
0	0.000	0.000	0.000	0.000	0.000	0.000	0.000	0.000
0	0.000	0.000	0.000	0.000	0.000	0.000	0.000	0.000
TOTAL	15.750	1.563	3.150	0.313	5.481	0.544	1.096	0.109

Crushing and Screening	PM				PM-10			
	Uncontrolled		Controlled		Uncontrolled		Controlled	
	lb/hr	TPY	lb/hr	TPY	lb/hr	TPY	lb/hr	TPY
TOTAL	16.082	1.653	3.216	0.331	5.647	0.589	1.129	0.118

EMISSION FACTORS

source: AP42, Fifth Edition, Revised 08/2004

(lb/ton of material throughput)

PM	
Primary Crushing	0.002
Tertiary Crushing	0.0054
Screening	0.025

PM-10	
Primary Crushing	0.001
Tertiary Crushing	0.0024
Screening	0.0087

2. *Emissions From TRANSFER POINTS*

Transfer Point ID No.	PM				PM-10			
	Uncontrolled		Controlled		Uncontrolled		Controlled	
	lb/hr	TPY	lb/hr	TPY	lb/hr	TPY	lb/hr	TPY
TP1	0.088	0.023	0.088	0.023	0.042	0.011	0.042	0.011
TP2	0.088	0.023	0.088	0.023	0.042	0.011	0.042	0.011
TP3	0.044	0.012	0.044	0.012	0.021	0.005	0.021	0.005
TP4	0.044	0.012	0.044	0.012	0.021	0.005	0.021	0.005
TP5	0.044	0.012	0.044	0.012	0.021	0.005	0.021	0.005
TP6	0.044	0.012	0.044	0.012	0.021	0.005	0.021	0.005
TP7	0.088	0.023	0.088	0.023	0.042	0.011	0.042	0.011
TP8	0.088	0.023	0.088	0.023	0.042	0.011	0.042	0.011
TP9	0.088	0.023	0.088	0.023	0.042	0.011	0.042	0.011
TP10	0.088	0.023	0.088	0.023	0.042	0.011	0.042	0.011
TP11	0.176	0.021	0.176	0.021	0.083	0.010	0.083	0.010
TP12	0.147	0.039	0.147	0.039	0.069	0.018	0.069	0.018
TP13	0.147	0.039	0.147	0.039	0.069	0.018	0.069	0.018
TP14	0.070	0.018	0.070	0.018	0.033	0.009	0.033	0.009
TP15	0.070	0.018	0.070	0.018	0.033	0.009	0.033	0.009
TP16	0.213	0.055	0.213	0.055	0.101	0.026	0.101	0.026
TP17	0.213	0.055	0.213	0.055	0.101	0.026	0.101	0.026
TP18	0.213	0.055	0.213	0.055	0.101	0.026	0.101	0.026
TP19	0.048	0.046	0.048	0.046	0.023	0.022	0.023	0.022
TP20	0.048	0.046	0.048	0.046	0.023	0.022	0.023	0.022
TP21	0.048	0.046	0.048	0.046	0.023	0.022	0.023	0.022
TP22	0.048	0.046	0.048	0.046	0.023	0.022	0.023	0.022
TP23	0.037	0.039	0.037	0.039	0.017	0.018	0.017	0.018
TP24	0.037	0.039	0.037	0.039	0.017	0.018	0.017	0.018
TP25	0.165	0.165	0.165	0.165	0.078	0.078	0.078	0.078
TP26	0.312	0.308	0.312	0.308	0.147	0.146	0.147	0.146
TP27	0.312	0.308	0.312	0.308	0.147	0.146	0.147	0.146
TP28	0.312	0.308	0.312	0.308	0.147	0.146	0.147	0.146
TP29	0.029	0.030	0.015	0.015	0.014	0.014	0.007	0.007
TP30	0.029	0.030	0.006	0.006	0.014	0.014	0.003	0.003
TP31	0.029	0.030	0.006	0.006	0.014	0.014	0.003	0.003
TP32	0.029	0.030	0.006	0.006	0.014	0.014	0.003	0.003
TP33	0.029	0.030	0.006	0.006	0.014	0.014	0.003	0.003
TP34	0.029	0.030	0.006	0.006	0.014	0.014	0.003	0.003
TP35	1.100	0.308	0.220	0.062	0.520	0.146	0.104	0.029
TP36	1.100	0.308	0.220	0.062	0.520	0.146	0.104	0.029
TP37	1.100	0.308	0.220	0.062	0.520	0.146	0.104	0.029
TP38	1.100	0.308	0.220	0.062	0.520	0.146	0.104	0.029
0	0.000	0.000	0.000	0.000	0.000	0.000	0.000	0.000
0	0.000	0.000	0.000	0.000	0.000	0.000	0.000	0.000
0	0.000	0.000	0.000	0.000	0.000	0.000	0.000	0.000
0	0.000	0.000	0.000	0.000	0.000	0.000	0.000	0.000
0	0.000	0.000	0.000	0.000	0.000	0.000	0.000	0.000
0	0.000	0.000	0.000	0.000	0.000	0.000	0.000	0.000
0	0.000	0.000	0.000	0.000	0.000	0.000	0.000	0.000
0	0.000	0.000	0.000	0.000	0.000	0.000	0.000	0.000
0	0.000	0.000	0.000	0.000	0.000	0.000	0.000	0.000
0	0.000	0.000	0.000	0.000	0.000	0.000	0.000	0.000
0	0.000	0.000	0.000	0.000	0.000	0.000	0.000	0.000
0	0.000	0.000	0.000	0.000	0.000	0.000	0.000	0.000
0	0.000	0.000	0.000	0.000	0.000	0.000	0.000	0.000
0	0.000	0.000	0.000	0.000	0.000	0.000	0.000	0.000
0	0.000	0.000	0.000	0.000	0.000	0.000	0.000	0.000

2. *Emissions From TRANSFER POINTS (continued)*

Transfer Point ID No.	PM				PM-10			
	Uncontrolled		Controlled		Uncontrolled		Controlled	
	lb/hr	TPY	lb/hr	TPY	lb/hr	TPY	lb/hr	TPY
0	0.000	0.000	0.000	0.000	0.000	0.000	0.000	0.000
0	0.000	0.000	0.000	0.000	0.000	0.000	0.000	0.000
0	0.000	0.000	0.000	0.000	0.000	0.000	0.000	0.000
0	0.000	0.000	0.000	0.000	0.000	0.000	0.000	0.000
TOTALS	7.892	3.245	4.239	2.126	3.733	1.535	2.005	1.006

Source:
AP42, Fifth Edition, Revised 11/2006
13.2.4 Aggregate Handling and Storage Piles

Emissions From Batch Drop

E = k*(0.0032) * [(U/5)^1.3]/[(M/2)^1.4] = pounds/ton

Where:		PM	PM-10
k =	Particle Size Multiplier (dimensionless)	0.74	0.35
U =	Mean Wind Speed (mph)		
M =	Material Moisture Content (%)		

Assumptions:

k - Particle size multiplier
For PM (< or equal to 30um) k = 0.74
For PM-10 (< or equal to 10um) k = 0.35

Emission Factor
For PM E= $I$88*(0.0032)*((((Inputs!$I$72)/5)^1.3)/(((Inputs!G78+0.000000001)/2)^1.4))
=lb/ton

For PM-10 E= $J$88*(0.0032)*((((Inputs!$I$72)/5)^1.3)/(((Inputs!G78+0.000000001)/2)^1.4))
=lb/ton

For lb/hr [lb/ton]*[ton/hr] = [lb/hr]

For Tons/year [lb/ton]*[ton/yr]*[ton/2000lb] = [ton/yr]

3. Emissions From WIND EROSION OF STOCKPILES

Stockpile ID No.	PM				PM-10			
	Uncontrolled		Controlled		Uncontrolled		Controlled	
	lb/hr	TPY	lb/hr	TPY	lb/hr	TPY	lb/hr	TPY
OSP1	0.013	0.056	0.006	0.028	0.006	0.026	0.003	0.013
OSP2	0.013	0.056	0.006	0.028	0.006	0.026	0.003	0.013
OSP3	0.026	0.112	0.013	0.056	0.012	0.053	0.006	0.026
OSP4	0.026	0.112	0.013	0.056	0.012	0.053	0.006	0.026
OSP5	0.026	0.112	0.013	0.056	0.012	0.053	0.006	0.026
OSP6	0.026	0.112	0.013	0.056	0.012	0.053	0.006	0.026
OSP7	0.038	0.168	0.019	0.084	0.018	0.079	0.009	0.040
OSP8	0.038	0.168	0.019	0.084	0.018	0.079	0.009	0.040
OSP9	0.031	0.134	0.015	0.067	0.014	0.063	0.007	0.032
OSP10	0.031	0.134	0.015	0.067	0.014	0.063	0.007	0.032
OSP11	0.026	0.112	0.013	0.056	0.012	0.053	0.006	0.026
OSP12	0.012	0.051	0.006	0.025	0.005	0.024	0.003	0.012
OSP13	0.012	0.051	0.006	0.025	0.005	0.024	0.003	0.012
OSP14	0.015	0.067	0.008	0.034	0.007	0.032	0.004	0.016
OSP15	0.015	0.067	0.015	0.067	0.007	0.032	0.007	0.032
OSP16	0.008	0.034	0.008	0.034	0.004	0.016	0.004	0.016
OSP17	0.015	0.067	0.015	0.067	0.007	0.032	0.007	0.032
OSP18	0.008	0.034	0.008	0.034	0.004	0.016	0.004	0.016
0	0.000	0.000	0.000	0.000	0.000	0.000	0.000	0.000
0	0.000	0.000	0.000	0.000	0.000	0.000	0.000	0.000
TOTALS	0.376	1.649	0.211	0.925	0.177	0.775	0.099	0.435

Source:
Air Pollution Engineering Manual

Storage Pile Wind Erosion (Active Storage)

E = 1.7*[s/1.5]*[(365-p)/235]*[f/15] = (lb/day/acre)

Where:

s =	silt content of material
p =	number of days with >0.01 inch of precipitation per year
f =	percentage of time that the unobstructed wind speed
	exceeds 12 mph at the mean pile height

Emission Factors

For PM E=(1.7)*((Inputs!F147)/1.5)*((365-Inputs!I139)/235)*((Inputs!I140)/15)

For PM-10 E=0.47*(1.7)*((Inputs!F147)/1.5)*((365-Inputs!I139)/235)*((Inputs!I140)/15)

For lb/hr [lb/day/acre]*[day/24hr]*[base area of pile (acres)] = lb/hr

For Ton/yr [lb/day/acre]*[365day/yr]*[Ton/2000lb]*[base area of pile (acres)] = Ton/yr

4. Emissions From UNPAVED HAULROADS

Item No.	PM				PM-10			
	Uncontrolled		Controlled		Uncontrolled		Controlled	
	lb/hr	TPY	lb/hr	TPY	lb/hr	TPY	lb/hr	TPY
1	0.00	0.00	0.00	0.00	0.00	0.00	0.00	0.00
2	0.00	0.00	0.00	0.00	0.00	0.00	0.00	0.00
3	0.00	0.00	0.00	0.00	0.00	0.00	0.00	0.00
4	0.00	0.00	0.00	0.00	0.00	0.00	0.00	0.00
5	0.00	0.00	0.00	0.00	0.00	0.00	0.00	0.00
6	0.00	0.00	0.00	0.00	0.00	0.00	0.00	0.00
7	0.00	0.00	0.00	0.00	0.00	0.00	0.00	0.00
8	0.00	0.00	0.00	0.00	0.00	0.00	0.00	0.00
TOTALS	0.00	0.00	0.00	0.00	0.00	0.00	0.00	0.00

Source:
AP42, Fifth Edition, Revised 11/2006
13.2.2 Unpaved Roads

Emission Estimate For Unpaved Haulroads at Industrial Sites (equation 1)

E= k*((s/12)^a)*((W/3)^b) =lb/vmt

Where:

		PM	PM-10
k =	particle size multiplier	4.90	1.50
a =	empirical constant	0.7	0.9
b =	empirical constant	0.45	0.45

Emission Factors

For PM E= (($I$35)*(((Inputs!$I$163)/12)^($I$36))*(((Inputs!H171)/3)^$I$37))

For PM-10 E= (($J$35)*(((Inputs!$I$163)/12)^($J$36))*(((Inputs!H171)/3)^$J$37))

For lb/hr (lb/vmt)*(miles per trip)*(Max trips per hour)

For Ton/yr (lb/vmt)*(miles per trip)*(Max trips per year)*(1/2000)

5. *Emissions From INDUSTRIAL PAVED HAULROADS*

Item No.	PM				PM-10			
	Uncontrolled		Controlled		Uncontrolled		Controlled	
	lb/hr	TPY	lb/hr	TPY	lb/hr	TPY	lb/hr	TPY
1	33.99	14.09	10.20	4.23	6.63	2.75	1.99	0.82
2	4.80	5.03	4.80	5.03	0.94	0.98	0.94	0.98
3	17.30	9.01	5.19	2.70	3.38	1.76	1.01	0.53
4	18.39	9.58	5.52	2.87	3.59	1.87	1.08	0.56
5	0.00	0.00	0.00	0.00	0.00	0.00	0.00	0.00
6	0.00	0.00	0.00	0.00	0.00	0.00	0.00	0.00
7	0.00	0.00	0.00	0.00	0.00	0.00	0.00	0.00
8	0.00	0.00	0.00	0.00	0.00	0.00	0.00	0.00
TOTALS	74.49	37.71	25.71	14.83	14.53	7.36	5.02	2.89

Source:
AP42, Fifth Edition, Revised 11/2006
13.2.1 PAVED ROADS

Emission Estimate For Paved Haulroads

E = [k * (sL/2)^0.65 * (W/3)^1.5 - C] * (1 - (P/4*N) = lb / Vehicle Mile Traveled (VMT)

Where:

		PM	PM-10
k =	particle size multiplier	0.082	0.016
sL =	road surface silt loading, (g/ft^2)	70	
P =	number of days per year with precipitation >0.01 inch	157	
N =	number of days in averaging period	365	
C=	factor for exhaust, brake wear and tire wear	0.00047	0.00047

Emission Factors

For PM E= ($I$34*((($I$35)/2)^0.65)*(((Inputs!G190)/3)^1.5)-($I$38))*(1-((Inputs!$I$1

For PM-10 E= ($J$34)*((($I$35)/2)^0.65)*(((Inputs!G190)/3)^1.5))-($I$38))*(1-((Inputs!I

For lb/hr (lb/vmt)*(miles per trip)*(Max trips per hour)

For Ton/yr (lb/vmt)*(miles per trip)*(Max trips per year)*(1/2000)

ATTACHMENT N

SUPPORTING EMISSIONS CALCULATIONS (PROPOSED MODIFICATIONS without EXISTING CONDITIONS)

INPUTS

Include all information for each emission source and transfer point as listed in the permit application.

Name of applicant: J.F. Allen Company
Name of plant: McAlpin Site

1. CRUSHING AND SCREENING (including all primary and secondary crushers and screens)

1a. PRIMARY CRUSHING

Primary Crusher ID Number	Description	Maximum Material Processing Capacity TPH	Maximum Material Processing Capacity TPY	Control Device ID Number	Control Efficiency %
C1	PORTABLE CRUSHER	166	90,000	C1	80

1b. SECONDARY AND TERTIARY CRUSHING

Secondary & Tertiary Crusher ID	Description	Maximum Material Processing Capacity TPH	Maximum Material Processing Capacity TPY	Control Device ID Number	Control Efficiency %

1c. SCREENING

Secondary & Tertiary Crusher ID	Description	Maximum Material Processing Capacity TPH	Maximum Material Processing Capacity TPY	Control Device ID Number	Control Efficiency %
S2	DEISTER SCREEN	90	25,000	S2	80
S3	PORTABLE SCREEN	240	25,000	S3	80

2. *TRANSFER POINTS (including all conveyor transfer points, equipment transfer points etc.)*

		PM	PM-10
k =	Particle Size Multiplier (dimensionless)	0.74	0.35
U =	Mean Wind Speed (mph)	7	

Transfer Point ID No.	Transfer Point Description Include ID Numbers of all conveyors, crushers, screens, stockpiles, etc. involved	Material Moisture Content %	Maximum Transfer Rate TPH	Maximum Transfer Rate TPY	Control Device ID Number	Control Efficiency %
TP8	TRUCK to OSP8	2	135	45,000	NA	0
TP9	TRUCK to OSP9	2	135	45,000	NA	0
TP10	TRUCK to OSP10	2	135	45,000	NA	0
TP11	TRUCK to OSP11	2	75	40,000	NA	0
TP12	TRUCK to OSP12	2	225	75,000	NA	0
TP13	TRUCK to OSP13	2	225	75,000	NA	0
TP14	TRUCK to OSP14	2	30	10,000	NA	0
TP15	TRUCK TO OSP15	2	30	10,000	NA	0
TP16	TRUCK TO OSP16	2	90	30,000	NA	0
TP17	TRUCK TO OSP17	2	90	30,000	NA	0
TP18	TRUCK TO OSP18	2	90	30,000	NA	0
TP19	ENDLOADER to COLD AGG BIN	2	45	90,000	NA	0
TP20	ENDLOADER to COLD AGG BIN	2	45	90,000	NA	0
TP21	ENDLOADER to COLD AGG BIN	2	45	90,000	NA	0
TP22	ENDLOADER to COLD AGG BIN	2	45	90,000	NA	0
TP23	ENDLOADER to COLD AGG BIN	2	37	75,000	NA	0
TP24	ENDLOADER to COLD AGG BIN	2	37	75,000	NA	0
TP25	ENDLOADER to RAP BIN	2	45	90,000	NA	0
TP26	ENDLOADER to RAP BIN	2	45	90,000	NA	0
TP27	COLD AGG BIN to BC1 BELT	2	300	600,000	NA	0
TP28	BC1 to S1 SCREEN	2	300	600,000	NA	0
TP29	S1 SCREEN to BC2 BELT	2	45	90,000	PE1	50
TP30	COLD RAP BIN to BC4 BELT	2	45	90,000	FE1	80
TP31	BC4 BELT to S2 SCREEN	2	45	90,000	FE2	80
TP32	S2 SCREEN to BC5 BELT	2	45	90,000	FE3	80
TP33	BC5 BELT to BC6 BELT	2	45	90,000	FE4	80
TP34	BC3 BELT to TRUCK	2	45	90,000	FE5	80
TP35	BC3 BELT to SILO	2	300	600,000	FE6	80
TP36	BC3 BELT to SILO	2	300	600,000	FE7	80
TP37	BC3 BELT to SILO	2	300	600,000	FE8	80
TP38	BC3 BELT to SILO	2	300	600,000	FE9	80

3. WIND EROSION OF STOCKPILES (including all stockpiles of raw coal, clean coal, coal refuse, etc.)

p =	number of days per year with precipitation >0.01 inch	157
f =	percentage of time that the unobstructed wind speed exceeds 12 mph at the mean pile height	20

Source ID No.	Stockpile Description	Silt Content of Material %	Stockpile base area Max. sqft	Control Device ID Number	Control Efficiency %
OSP8	LIMESTONE 8	2	15,000	PE9	50
OSP9	LIMESTONE 9	2	12,000	PE10	50
OSP10	LIMESTONE 9	2	12,000	PE11	50
OSP11	LIMESTONE 1.5	2	10,000	PE12	50
OSP12	SAND	2	4,550	PE13	50
OSP13	SAND	2	4,550	PE14	50
OSP14	LIMESTONE 1	2	6,000	PE15	50
OSP15	LIMESTONE 3	2	6,000	NA	0
OSP16	RAP	2	3,000	NA	0
OSP17	RAP	2	6,000	NA	0
OSP18	RAP CRUSHED	2	3,000	NA	0

4. UNPAVED HAULROADS (including all equipment traffic involved in process, haul trucks, endloaders, etc.)

s =	silt content of road surface material (%)	10
p =	number of days per year with precipitation >0.01 inch	157
M_{dry} =	surface material moisture content (%) - dry conditions	0.2

Item Number	Description	Number of wheels	Mean Vehicle Weight(tons)	Mean Vehicle Speed (mph)	Miles per Trip	Maximum Trips Per Hour	Maximum Trips Per Year	Control Device ID Number	Control Efficiency %
1									
2									
3									
4									
5									
6									
7									
8									

5. INDUSTRIAL PAVED HAULROADS (including all equipment traffic involved in process, haul trucks, endloaders, etc.)

sL =	road surface silt loading, (g/ft^2)	70
P =	number of days per year with precipitation >0.01 inch	157

Item Number	Description	Mean Vehicle Weight (tons)	Miles per Trip	Maximum Trips Per Hour	Maximum Trips Per Year	Control Device ID Number	Control Efficiency %
1	18 WHEEL TRUCK TRACTOR	44	0.17	23	7,708	WS1	70
2	ENDLOADER	32.8	0.02	24	48,583	NA	0
3	14 WHEEL TRUCK TRI	38.5	0.17	30	10,020	WS1	70
4							
5							
6							
7							
8							

EMISSIONS SUMMARY

Name of applicant: J.F. Allen Company
Name of plant: McAlpin Site

Particulate Matter or PM (for 45CSR14 Major Source Determination)

	Uncontrolled PM		Controlled PM	
	lb/hr	TPY	lb/hr	TPY
FUGITIVE EMISSIONS				
Stockpile Emissions	0.21	0.92	0.13	0.56
Unpaved Haulroad Emissions	0.00	0.00	0.00	0.00
Paved Haulroad Emissions	347.91	69.02	113.34	29.78
Fugitive Emissions Total	**348.12**	**69.94**	**113.47**	**30.34**
POINT SOURCE EMISSIONS				
Equipment Emissions	8.58	0.72	1.72	0.14
Transfer Point Emissions	13.47	9.65	9.21	5.39
Point Source Emissions Total*	**22.06**	**10.37**	**10.93**	**5.53**
*Note: Point Source Total Controlled PM TPY emissions is used for 45CSR14 Major Source determination (see below)				
Facility Emissions Total	**370.18**	**80.31**	**124.39**	**35.87**

***Facility Potential to Emit (PTE) (Baseline Emissions) = 5.53**

(Based on Point Source Total controlled PM TPY emissions from above) **ENTER ON LINE 26 OF APPLICATION**

Particulate Matter under 10 microns, or PM-10 (for 45CSR30 Major Source Determination)

	Uncontrolled PM-10		Controlled PM-10	
	lb/hr	TPY	lb/hr	TPY
FUGITIVE EMISSIONS				
Stockpile Emissions	0.10	0.43	0.06	0.26
Unpaved Haulroad Emissions	0.00	0.00	0.00	0.00
Paved Haulroad Emissions	67.88	13.47	22.11	5.81
Fugitive Emissions Total	**67.98**	**13.90**	**22.17**	**6.07**
POINT SOURCE EMISSIONS				
Equipment Emissions	3.04	0.26	0.61	0.05
Transfer Point Emissions	6.37	4.57	4.36	2.55
Point Source Emissions Total*	**9.41**	**4.83**	**4.96**	**2.60**
*Note: Point Source Total Controlled PM-10 TPY emissions is used for 45CSR30 Major Source determination				
Facility Emissions Total	**77.39**	**18.73**	**27.14**	**8.68**

1. Emissions From CRUSHING AND SCREENING

1a. Primary Crushing

Primary Crusher ID Number	PM				PM-10			
	Uncontrolled		Controlled		Uncontrolled		Controlled	
	lb/hr	TPY	lb/hr	TPY	lb/hr	TPY	lb/hr	TPY
C1	0.332	0.090	0.066	0.018	0.166	0.045	0.033	0.009
0	0.000	0.000	0.000	0.000	0.000	0.000	0.000	0.000
0	0.000	0.000	0.000	0.000	0.000	0.000	0.000	0.000
0	0.000	0.000	0.000	0.000	0.000	0.000	0.000	0.000
0	0.000	0.000	0.000	0.000	0.000	0.000	0.000	0.000
TOTAL	0.332	0.090	0.066	0.018	0.166	0.045	0.033	0.009

1b. Secondary and Tertiary Crushing

Secondary & Tertiary Crusher ID	PM				PM-10			
	Uncontrolled		Controlled		Uncontrolled		Controlled	
	lb/hr	TPY	lb/hr	TPY	lb/hr	TPY	lb/hr	TPY
0	0.000	0.000	0.000	0.000	0.000	0.000	0.000	0.000
0	0.000	0.000	0.000	0.000	0.000	0.000	0.000	0.000
0	0.000	0.000	0.000	0.000	0.000	0.000	0.000	0.000
0	0.000	0.000	0.000	0.000	0.000	0.000	0.000	0.000
0	0.000	0.000	0.000	0.000	0.000	0.000	0.000	0.000
0	0.000	0.000	0.000	0.000	0.000	0.000	0.000	0.000
0	0.000	0.000	0.000	0.000	0.000	0.000	0.000	0.000
0	0.000	0.000	0.000	0.000	0.000	0.000	0.000	0.000
0	0.000	0.000	0.000	0.000	0.000	0.000	0.000	0.000
0	0.000	0.000	0.000	0.000	0.000	0.000	0.000	0.000
0	0.000	0.000	0.000	0.000	0.000	0.000	0.000	0.000
0	0.000	0.000	0.000	0.000	0.000	0.000	0.000	0.000
TOTAL	0.000	0.000	0.000	0.000	0.000	0.000	0.000	0.000

1c. Screening

Screen ID Number	PM				PM-10			
	Uncontrolled		Controlled		Uncontrolled		Controlled	
	lb/hr	TPY	lb/hr	TPY	lb/hr	TPY	lb/hr	TPY
0	0.000	0.000	0.000	0.000	0.000	0.000	0.000	0.000
S2	2.250	0.313	0.450	0.063	0.783	0.109	0.157	0.022
S3	6.000	0.313	1.200	0.063	2.088	0.109	0.418	0.022
0	0.000	0.000	0.000	0.000	0.000	0.000	0.000	0.000
0	0.000	0.000	0.000	0.000	0.000	0.000	0.000	0.000
0	0.000	0.000	0.000	0.000	0.000	0.000	0.000	0.000
0	0.000	0.000	0.000	0.000	0.000	0.000	0.000	0.000
0	0.000	0.000	0.000	0.000	0.000	0.000	0.000	0.000
0	0.000	0.000	0.000	0.000	0.000	0.000	0.000	0.000
0	0.000	0.000	0.000	0.000	0.000	0.000	0.000	0.000
0	0.000	0.000	0.000	0.000	0.000	0.000	0.000	0.000
0	0.000	0.000	0.000	0.000	0.000	0.000	0.000	0.000
0	0.000	0.000	0.000	0.000	0.000	0.000	0.000	0.000
0	0.000	0.000	0.000	0.000	0.000	0.000	0.000	0.000
0	0.000	0.000	0.000	0.000	0.000	0.000	0.000	0.000
TOTAL	8.250	0.625	1.650	0.125	2.871	0.218	0.574	0.044

Crushing and Screening	PM				PM-10			
	Uncontrolled		Controlled		Uncontrolled		Controlled	
	lb/hr	TPY	lb/hr	TPY	lb/hr	TPY	lb/hr	TPY
TOTAL	8.582	0.715	1.716	0.143	3.037	0.263	0.607	0.053

1. Emissions From CRUSHING AND SCREENING (Continued)

EMISSION FACTORS

source: AP42, Fifth Edition, Revised 08/2004
(lb/ton of material throughput)

PM	
Primary Crushing	0.002
Tertiary Crushing	0.0054
Screening	0.025

PM-10	
Primary Crushing	0.001
Tertiary Crushing	0.0024
Screening	0.0087

2. Emissions From TRANSFER POINTS

Transfer Point ID No.	PM				PM-10			
	Uncontrolled		Controlled		Uncontrolled		Controlled	
	lb/hr	TPY	lb/hr	TPY	lb/hr	TPY	lb/hr	TPY
0	0.000	0.000	0.000	0.000	0.000	0.000	0.000	0.000
0	0.000	0.000	0.000	0.000	0.000	0.000	0.000	0.000
0	0.000	0.000	0.000	0.000	0.000	0.000	0.000	0.000
0	0.000	0.000	0.000	0.000	0.000	0.000	0.000	0.000
0	0.000	0.000	0.000	0.000	0.000	0.000	0.000	0.000
0	0.000	0.000	0.000	0.000	0.000	0.000	0.000	0.000
0	0.000	0.000	0.000	0.000	0.000	0.000	0.000	0.000
TP8	0.495	0.083	0.495	0.083	0.234	0.039	0.234	0.039
TP9	0.495	0.083	0.495	0.083	0.234	0.039	0.234	0.039
TP10	0.495	0.083	0.495	0.083	0.234	0.039	0.234	0.039
TP11	0.275	0.073	0.275	0.073	0.130	0.035	0.130	0.035
TP12	0.825	0.138	0.825	0.138	0.390	0.065	0.390	0.065
TP13	0.825	0.138	0.825	0.138	0.390	0.065	0.390	0.065
TP14	0.110	0.018	0.110	0.018	0.052	0.009	0.052	0.009
TP15	0.110	0.018	0.110	0.018	0.052	0.009	0.052	0.009
TP16	0.330	0.055	0.330	0.055	0.156	0.026	0.156	0.026
TP17	0.330	0.055	0.330	0.055	0.156	0.026	0.156	0.026
TP18	0.330	0.055	0.330	0.055	0.156	0.026	0.156	0.026
TP19	0.165	0.165	0.165	0.165	0.078	0.078	0.078	0.078
TP20	0.165	0.165	0.165	0.165	0.078	0.078	0.078	0.078
TP21	0.165	0.165	0.165	0.165	0.078	0.078	0.078	0.078
TP22	0.165	0.165	0.165	0.165	0.078	0.078	0.078	0.078
TP23	0.136	0.138	0.136	0.138	0.064	0.065	0.064	0.065
TP24	0.136	0.138	0.136	0.138	0.064	0.065	0.064	0.065
TP25	0.165	0.165	0.165	0.165	0.078	0.078	0.078	0.078
TP26	0.165	0.165	0.165	0.165	0.078	0.078	0.078	0.078
TP27	1.100	1.100	1.100	1.100	0.520	0.520	0.520	0.520
TP28	1.100	1.100	1.100	1.100	0.520	0.520	0.520	0.520
TP29	0.165	0.165	0.083	0.083	0.078	0.078	0.039	0.039
TP30	0.165	0.165	0.033	0.033	0.078	0.078	0.016	0.016
TP31	0.165	0.165	0.033	0.033	0.078	0.078	0.016	0.016
TP32	0.165	0.165	0.033	0.033	0.078	0.078	0.016	0.016
TP33	0.165	0.165	0.033	0.033	0.078	0.078	0.016	0.016
TP34	0.165	0.165	0.033	0.033	0.078	0.078	0.016	0.016
TP35	1.100	1.100	0.220	0.220	0.520	0.520	0.104	0.104
TP36	1.100	1.100	0.220	0.220	0.520	0.520	0.104	0.104
TP37	1.100	1.100	0.220	0.220	0.520	0.520	0.104	0.104
TP38	1.100	1.100	0.220	0.220	0.520	0.520	0.104	0.104
0	0.000	0.000	0.000	0.000	0.000	0.000	0.000	0.000
0	0.000	0.000	0.000	0.000	0.000	0.000	0.000	0.000
0	0.000	0.000	0.000	0.000	0.000	0.000	0.000	0.000
0	0.000	0.000	0.000	0.000	0.000	0.000	0.000	0.000
0	0.000	0.000	0.000	0.000	0.000	0.000	0.000	0.000
0	0.000	0.000	0.000	0.000	0.000	0.000	0.000	0.000
0	0.000	0.000	0.000	0.000	0.000	0.000	0.000	0.000
0	0.000	0.000	0.000	0.000	0.000	0.000	0.000	0.000
0	0.000	0.000	0.000	0.000	0.000	0.000	0.000	0.000
0	0.000	0.000	0.000	0.000	0.000	0.000	0.000	0.000
0	0.000	0.000	0.000	0.000	0.000	0.000	0.000	0.000
0	0.000	0.000	0.000	0.000	0.000	0.000	0.000	0.000
0	0.000	0.000	0.000	0.000	0.000	0.000	0.000	0.000
0	0.000	0.000	0.000	0.000	0.000	0.000	0.000	0.000
0	0.000	0.000	0.000	0.000	0.000	0.000	0.000	0.000

2. *Emissions From TRANSFER POINTS (continued)*

Transfer Point ID No.	PM				PM-10			
	Uncontrolled		Controlled		Uncontrolled		Controlled	
	lb/hr	TPY	lb/hr	TPY	lb/hr	TPY	lb/hr	TPY
0	0.000	0.000	0.000	0.000	0.000	0.000	0.000	0.000
0	0.000	0.000	0.000	0.000	0.000	0.000	0.000	0.000
0	0.000	0.000	0.000	0.000	0.000	0.000	0.000	0.000
0	0.000	0.000	0.000	0.000	0.000	0.000	0.000	0.000
TOTALS	13.474	9.654	9.210	5.391	6.373	4.566	4.356	2.550

Source:
AP42, Fifth Edition, Revised 11/2006
13.2.4 Aggregate Handling and Storage Piles

Emissions From Batch Drop

E = k*(0.0032) * [(U/5)^1.3]/[(M/2)^1.4] = pounds/ton

Where:		PM	PM-10
k =	Particle Size Multiplier (dimensionless)	0.74	0.35
U =	Mean Wind Speed (mph)		
M =	Material Moisture Content (%)		

Assumptions:

k - Particle size multiplier
For PM (< or equal to 30um) k = 0.74
For PM-10 (< or equal to 10um) k = 0.35

Emission Factor
For PM E= $I$88*(0.0032)*((((Inputs!$I$72)/5)^1.3)/(((Inputs!G78+0.000000001)/2)^1.4))
=lb/ton

For PM-10 E= $J$88*(0.0032)*((((Inputs!$I$72)/5)^1.3)/(((Inputs!G78+0.000000001)/2)^1.4))
=lb/ton

For lb/hr [lb/ton]*[ton/hr] = [lb/hr]

For Tons/year [lb/ton]*[ton/yr]*[ton/2000lb] = [ton/yr]

3. *Emissions From WIND EROSION OF STOCKPILES*

Stockpile ID No.	PM				PM-10			
	Uncontrolled		Controlled		Uncontrolled		Controlled	
	lb/hr	TPY	lb/hr	TPY	lb/hr	TPY	lb/hr	TPY
0	0.000	0.000	0.000	0.000	0.000	0.000	0.000	0.000
0	0.000	0.000	0.000	0.000	0.000	0.000	0.000	0.000
0	0.000	0.000	0.000	0.000	0.000	0.000	0.000	0.000
0	0.000	0.000	0.000	0.000	0.000	0.000	0.000	0.000
0	0.000	0.000	0.000	0.000	0.000	0.000	0.000	0.000
0	0.000	0.000	0.000	0.000	0.000	0.000	0.000	0.000
0	0.000	0.000	0.000	0.000	0.000	0.000	0.000	0.000
OSP8	0.038	0.168	0.019	0.084	0.018	0.079	0.009	0.040
OSP9	0.031	0.134	0.015	0.067	0.014	0.063	0.007	0.032
OSP10	0.031	0.134	0.015	0.067	0.014	0.063	0.007	0.032
OSP11	0.026	0.112	0.013	0.056	0.012	0.053	0.006	0.026
OSP12	0.012	0.051	0.006	0.025	0.005	0.024	0.003	0.012
OSP13	0.012	0.051	0.006	0.025	0.005	0.024	0.003	0.012
OSP14	0.015	0.067	0.008	0.034	0.007	0.032	0.004	0.016
OSP15	0.015	0.067	0.015	0.067	0.007	0.032	0.007	0.032
OSP16	0.008	0.034	0.008	0.034	0.004	0.016	0.004	0.016
OSP17	0.015	0.067	0.015	0.067	0.007	0.032	0.007	0.032
OSP18	0.008	0.034	0.008	0.034	0.004	0.016	0.004	0.016
0	0.000	0.000	0.000	0.000	0.000	0.000	0.000	0.000
0	0.000	0.000	0.000	0.000	0.000	0.000	0.000	0.000
TOTALS	0.210	0.920	0.128	0.561	0.099	0.432	0.060	0.264

Source:
Air Pollution Engineering Manual

Storage Pile Wind Erosion (Active Storage)

E = 1.7*[s/1.5]*[(365-p)/235]*[f/15] = (lb/day/acre)

Where:

s =	silt content of material
p =	number of days with >0.01 inch of precipitation per year
f =	percentage of time that the unobstructed wind speed
	exceeds 12 mph at the mean pile height

Emission Factors

For PM E=(1.7)*((Inputs!F147)/1.5)*((365-Inputs!I139)/235)*((Inputs!I140)/15)

For PM-10 E=0.47*(1.7)*((Inputs!F147)/1.5)*((365-Inputs!I139)/235)*((Inputs!I140)/15)

For lb/hr [lb/day/acre]*[day/24hr]*[base area of pile (acres)] = lb/hr

For Ton/yr [lb/day/acre]*[365day/yr]*[Ton/2000lb]*[base area of pile (acres)] = Ton/yr

4. Emissions From UNPAVED HAULROADS

Item No.	PM				PM-10			
	Uncontrolled		Controlled		Uncontrolled		Controlled	
	lb/hr	TPY	lb/hr	TPY	lb/hr	TPY	lb/hr	TPY
1	0.00	0.00	0.00	0.00	0.00	0.00	0.00	0.00
2	0.00	0.00	0.00	0.00	0.00	0.00	0.00	0.00
3	0.00	0.00	0.00	0.00	0.00	0.00	0.00	0.00
4	0.00	0.00	0.00	0.00	0.00	0.00	0.00	0.00
5	0.00	0.00	0.00	0.00	0.00	0.00	0.00	0.00
6	0.00	0.00	0.00	0.00	0.00	0.00	0.00	0.00
7	0.00	0.00	0.00	0.00	0.00	0.00	0.00	0.00
8	0.00	0.00	0.00	0.00	0.00	0.00	0.00	0.00
TOTALS	0.00	0.00	0.00	0.00	0.00	0.00	0.00	0.00

Source:
AP42, Fifth Edition, Revised 11/2006
13.2.2 Unpaved Roads

Emission Estimate For Unpaved Haulroads at Industrial Sites (equation 1)

E= k*((s/12)^a)*((W/3)^b) =lb/vmt

Where:

		PM	PM-10
k =	particle size multiplier	4.90	1.50
a =	empirical constant	0.7	0.9
b =	empirical constant	0.45	0.45

Emission Factors

For PM E= (($I$35)*(((Inputs!$I$163)/12)^($I$36))*(((Inputs!H171)/3)^$I$37))

For PM-10 E= (($J$35)*(((Inputs!$I$163)/12)^($J$36))*(((Inputs!H171)/3)^$J$37))

For lb/hr (lb/vmt)*(miles per trip)*(Max trips per hour)

For Ton/yr (lb/vmt)*(miles per trip)*(Max trips per year)*(1/2000)

5. *Emissions From INDUSTRIAL PAVED HAULROADS*

Item No.	PM				PM-10			
	Uncontrolled		Controlled		Uncontrolled		Controlled	
	lb/hr	TPY	lb/hr	TPY	lb/hr	TPY	lb/hr	TPY
1	162.08	27.16	48.62	8.15	31.62	5.30	9.49	1.59
2	12.81	12.96	12.81	12.96	2.50	2.53	2.50	2.53
3	173.03	28.90	51.91	8.67	33.76	5.64	10.13	1.69
4	0.00	0.00	0.00	0.00	0.00	0.00	0.00	0.00
5	0.00	0.00	0.00	0.00	0.00	0.00	0.00	0.00
6	0.00	0.00	0.00	0.00	0.00	0.00	0.00	0.00
7	0.00	0.00	0.00	0.00	0.00	0.00	0.00	0.00
8	0.00	0.00	0.00	0.00	0.00	0.00	0.00	0.00
TOTALS	347.91	69.02	113.34	29.78	67.88	13.47	22.11	5.81

Source:
AP42, Fifth Edition, Revised 11/2006
13.2.1 PAVED ROADS

Emission Estimate For Paved Haulroads

E = [k * (sL/2)^0.65 * (W/3)^1.5 - C] * (1 - (P/4*N) = lb / Vehicle Mile Traveled (VMT)

Where:

		PM	PM-10
k =	particle size multiplier	0.082	0.016
sL =	road surface silt loading, (g/ft^2)	70	
P =	number of days per year with precipitation >0.01 inch	157	
N =	number of days in averaging period	365	
C=	factor for exhaust, brake wear and tire wear	0.00047	0.00047

Emission Factors

For PM E= ($I$34*((($I$35)/2)^0.65)*(((Inputs!G190)/3)^1.5)-($I$38))*(1-((Inputs!$I$1

For PM-10 E= ($J$34)*((($I$35)/2)^0.65)*(((Inputs!G190)/3)^1.5))-($I$38))*(1-((Inputs!I

For lb/hr (lb/vmt)*(miles per trip)*(Max trips per hour)

For Ton/yr (lb/vmt)*(miles per trip)*(Max trips per year)*(1/2000)

ATTACHMENT N

SUPPORTING EMISSIONS CALCULATIONS (EXISTING CONDITIONS with all PROPOSED MODIFICATIONS)

INPUTS

Include all information for each emission source and transfer point as listed in the permit application.

Name of applicant: J.F. Allen Company
Name of plant: McAlpin Site

1. CRUSHING AND SCREENING (including all primary and secondary crushers and screens)

1a. PRIMARY CRUSHING

Primary Crusher ID Number	Description	Maximum Material Processing Capacity TPH	Maximum Material Processing Capacity TPY	Control Device ID Number	Control Efficiency %
C1	PORTABLE CRUSHER	166	90,000	C1	80

1b. SECONDARY AND TERTIARY CRUSHING

Secondary & Tertiary Crusher ID	Description	Maximum Material Processing Capacity TPH	Maximum Material Processing Capacity TPY	Control Device ID Number	Control Efficiency %

1c. SCREENING

Secondary & Tertiary Crusher ID	Description	Maximum Material Processing Capacity TPH	Maximum Material Processing Capacity TPY	Control Device ID Number	Control Efficiency %
S1	DOUBLE DECK SCREEN	300	75,000	S1	80
S2	DEISTER SCREEN	90	25,000	S2	80
S3	PORTABLE SCREEN	240	25,000	S3	80

2. *TRANSFER POINTS (including all conveyor transfer points, equipment transfer points etc.)*

		PM	PM-10
k =	Particle Size Multiplier (dimensionless)	0.74	0.35
U =	Mean Wind Speed (mph)	7	

Transfer Point ID No.	Transfer Point Description Include ID Numbers of all conveyors, crushers, screens, stockpiles, etc. involved	Material Moisture Content %	Maximum Transfer Rate TPH	Maximum Transfer Rate TPY	Control Device ID Number	Control Efficiency %
TP1	TRUCK to OSP1	2	135	45,000	NA	0
TP2	TRUCK to OSP2	2	135	45,000	NA	0
TP3	TRUCK to OSP3	2	67	22,500	NA	0
TP4	TRUCK to OSP4	2	67	22,500	NA	0
TP5	TRUCK to OSP5	2	67	22,500	NA	0
TP6	TRUCK to OSP6	2	67	22,500	NA	0
TP7	TRUCK to OSP7	2	135	45,000	NA	0
TP8	TRUCK to OSP8	2	135	45,000	NA	0
TP9	TRUCK to OSP9	2	135	45,000	NA	0
TP10	TRUCK to OSP10	2	135	45,000	NA	0
TP11	TRUCK to OSP11	2	75	40,000	NA	0
TP12	TRUCK to OSP12	2	225	75,000	NA	0
TP13	TRUCK to OSP13	2	225	75,000	NA	0
TP14	TRUCK to OSP14	2	30	10,000	NA	0
TP15	TRUCK TO OSP15	2	30	10,000	NA	0
TP16	TRUCK TO OSP16	2	90	30,000	NA	0
TP17	TRUCK TO OSP17	2	90	30,000	NA	0
TP18	TRUCK TO OSP18	2	90	30,000	NA	0
TP19	ENDLOADER to COLD AGG BIN	2	45	90,000	NA	0
TP20	ENDLOADER to COLD AGG BIN	2	45	90,000	NA	0
TP21	ENDLOADER to COLD AGG BIN	2	45	90,000	NA	0
TP22	ENDLOADER to COLD AGG BIN	2	45	90,000	NA	0
TP23	ENDLOADER to COLD AGG BIN	2	37	75,000	NA	0
TP24	ENDLOADER to COLD AGG BIN	2	37	75,000	NA	0
TP25	ENDLOADER to RAP BIN	2	45	90,000	NA	0
TP26	ENDLOADER to RAP BIN	2	45	90,000	NA	0
TP27	COLD AGG BIN to BC1 BELT	2	300	600,000	NA	0
TP28	BC1 to S1 SCREEN	2	300	600,000	NA	0
TP29	S1 SCREEN to BC2 BELT	2	45	90,000	PE1	50
TP30	COLD RAP BIN to BC4 BELT	2	45	90,000	FE1	80
TP31	BC4 BELT to S2 SCREEN	2	45	90,000	FE2	80
TP32	S2 SCREEN to BC5 BELT	2	45	90,000	FE3	80
TP33	BC5 BELT to BC6 BELT	2	45	90,000	FE4	80
TP34	BC3 BELT to TRUCK	2	45	90,000	FE5	80
TP35	BC3 BELT to SILO	2	300	600,000	FE6	80
TP36	BC3 BELT to SILO	2	300	600,000	FE7	80
TP37	BC3 BELT to SILO	2	300	600,000	FE8	80
TP38	BC3 BELT to SILO	2	300	600,000	FE9	80

3. WIND EROSION OF STOCKPILES *(including all stockpiles of raw coal, clean coal, coal refuse, etc.)*

p =	number of days per year with precipitation >0.01 inch	157
f =	percentage of time that the unobstructed wind speed exceeds 12 mph at the mean pile height	20

Source ID No.	Stockpile Description	Silt Content of Material %	Stockpile base area Max. sqft	Control Device ID Number	Control Efficiency %
OSP1	LIMESTONE 4	2	5,000	PE2	50
OSP2	LIMESTONE 4	2	5,000	PE3	50
OSP3	LIMESTONE 57	2	10,000	PE4	50
OSP4	LIMESTONE 57	2	10,000	PE5	50
OSP5	LIMESTONE 67	2	10,000	PE6	50
OSP6	LIMESTONE 67	2	10,000	PE7	50
OSP7	LIMESTONE 8	2	15,000	PE8	50
OSP8	LIMESTONE 8	2	15,000	PE9	50
OSP9	LIMESTONE 9	2	12,000	PE10	50
OSP10	LIMESTONE 9	2	12,000	PE11	50
OSP11	LIMESTONE 1.5	2	10,000	PE12	50
OSP12	SAND	2	4,550	PE13	50
OSP13	SAND	2	4,550	PE14	50
OSP14	LIMESTONE 1	2	6,000	PE15	50
OSP15	LIMESTONE 3	2	6,000	NA	0
OSP16	RAP	2	3,000	NA	0
OSP17	RAP	2	6,000	NA	0
OSP18	RAP CRUSHED	2	3,000	NA	0

4. UNPAVED HAULROADS *(including all equipment traffic involved in process, haul trucks, endloaders, etc.)*

s =	silt content of road surface material (%)	10
p =	number of days per year with precipitation >0.01 inch	157
M_{dry} =	surface material moisture content (%) - dry conditions	0.2

Item Number	Description	Number of wheels	Mean Vehicle Weight(tons)	Mean Vehicle Speed (mph)	Miles per Trip	Maximum Trips Per Hour	Maximum Trips Per Year	Control Device ID Number	Control Efficiency %
1									
2									
3									
4									
5									
6									
7									
8									

5. INDUSTRIAL PAVED HAULROADS *(including all equipment traffic involved in process, haul trucks, endloaders, etc.)*

sL =	road surface silt loading, (g/ft^2)	70
P =	number of days per year with precipitation >0.01 inch	157

Item Number	Description	Mean Vehicle Weight (tons)	Miles per Trip	Maximum Trips Per Hour	Maximum Trips Per Year	Control Device ID Number	Control Efficiency %
1	18 WHEEL TRUCK TRACTOR	44	0.17	23	7,708	WS1	70
2	ENDLOADER	32.8	0.02	24	48,583	NA	0
3	14 WHEEL TRUCK TRI	38.5	0.17	30	10,020	WS1	70
4	18 WHEEL TRUCK QUAD	40.1	0.17	30	10,020	WS1	70
5							
6							
7							
8							

EMISSIONS SUMMARY

Name of applicant: J.F. Allen Company
Name of plant: McAlpin Site

Particulate Matter or PM (for 45CSR14 Major Source Determination)

	Uncontrolled PM		Controlled PM	
	lb/hr	TPY	lb/hr	TPY
FUGITIVE EMISSIONS				
Stockpile Emissions	0.38	1.65	0.21	0.93
Unpaved Haulroad Emissions	0.00	0.00	0.00	0.00
Paved Haulroad Emissions	531.84	99.73	168.52	38.99
Fugitive Emissions Total	**532.22**	**101.38**	**168.73**	**39.92**
POINT SOURCE EMISSIONS				
Equipment Emissions	16.08	1.65	3.22	0.33
Transfer Point Emissions	15.94	10.07	11.68	5.80
Point Source Emissions Total*	**32.02**	**11.72**	**14.89**	**6.13**
*Note: Point Source Total Controlled PM TPY emissions is used for 45CSR14 Major Source determination (see below)				
Facility Emissions Total	**564.24**	**113.10**	**183.62**	**46.05**

***Facility Potential to Emit (PTE) (Baseline Emissions) = 6.13**

(Based on Point Source Total controlled PM TPY emissions from above) **ENTER ON LINE 26 OF APPLICATION**

Particulate Matter under 10 microns, or PM-10 (for 45CSR30 Major Source Determination)

	Uncontrolled PM-10		Controlled PM-10	
	lb/hr	TPY	lb/hr	TPY
FUGITIVE EMISSIONS				
Stockpile Emissions	0.18	0.77	0.10	0.43
Unpaved Haulroad Emissions	0.00	0.00	0.00	0.00
Paved Haulroad Emissions	103.77	19.46	32.88	7.61
Fugitive Emissions Total	**103.95**	**20.23**	**32.98**	**8.04**
POINT SOURCE EMISSIONS				
Equipment Emissions	5.65	0.59	1.13	0.12
Transfer Point Emissions	7.54	4.76	5.52	2.74
Point Source Emissions Total*	**13.19**	**5.35**	**6.65**	**2.86**
*Note: Point Source Total Controlled PM-10 TPY emissions is used for 45CSR30 Major Source determination				
Facility Emissions Total	**117.13**	**25.58**	**39.63**	**10.91**

1. Emissions From CRUSHING AND SCREENING

1a. Primary Crushing

Primary Crusher ID Number	PM				PM-10			
	Uncontrolled		Controlled		Uncontrolled		Controlled	
	lb/hr	TPY	lb/hr	TPY	lb/hr	TPY	lb/hr	TPY
C1	0.332	0.090	0.066	0.018	0.166	0.045	0.033	0.009
0	0.000	0.000	0.000	0.000	0.000	0.000	0.000	0.000
0	0.000	0.000	0.000	0.000	0.000	0.000	0.000	0.000
0	0.000	0.000	0.000	0.000	0.000	0.000	0.000	0.000
0	0.000	0.000	0.000	0.000	0.000	0.000	0.000	0.000
TOTAL	0.332	0.090	0.066	0.018	0.166	0.045	0.033	0.009

1b. Secondary and Tertiary Crushing

Secondary & Tertiary Crusher ID	PM				PM-10			
	Uncontrolled		Controlled		Uncontrolled		Controlled	
	lb/hr	TPY	lb/hr	TPY	lb/hr	TPY	lb/hr	TPY
0	0.000	0.000	0.000	0.000	0.000	0.000	0.000	0.000
0	0.000	0.000	0.000	0.000	0.000	0.000	0.000	0.000
0	0.000	0.000	0.000	0.000	0.000	0.000	0.000	0.000
0	0.000	0.000	0.000	0.000	0.000	0.000	0.000	0.000
0	0.000	0.000	0.000	0.000	0.000	0.000	0.000	0.000
0	0.000	0.000	0.000	0.000	0.000	0.000	0.000	0.000
0	0.000	0.000	0.000	0.000	0.000	0.000	0.000	0.000
0	0.000	0.000	0.000	0.000	0.000	0.000	0.000	0.000
0	0.000	0.000	0.000	0.000	0.000	0.000	0.000	0.000
0	0.000	0.000	0.000	0.000	0.000	0.000	0.000	0.000
0	0.000	0.000	0.000	0.000	0.000	0.000	0.000	0.000
0	0.000	0.000	0.000	0.000	0.000	0.000	0.000	0.000
TOTAL	0.000	0.000	0.000	0.000	0.000	0.000	0.000	0.000

1c. Screening

Screen ID Number	PM				PM-10			
	Uncontrolled		Controlled		Uncontrolled		Controlled	
	lb/hr	TPY	lb/hr	TPY	lb/hr	TPY	lb/hr	TPY
S1	7.500	0.938	1.500	0.188	2.610	0.326	0.522	0.065
S2	2.250	0.313	0.450	0.063	0.783	0.109	0.157	0.022
S3	6.000	0.313	1.200	0.063	2.088	0.109	0.418	0.022
0	0.000	0.000	0.000	0.000	0.000	0.000	0.000	0.000
0	0.000	0.000	0.000	0.000	0.000	0.000	0.000	0.000
0	0.000	0.000	0.000	0.000	0.000	0.000	0.000	0.000
0	0.000	0.000	0.000	0.000	0.000	0.000	0.000	0.000
0	0.000	0.000	0.000	0.000	0.000	0.000	0.000	0.000
0	0.000	0.000	0.000	0.000	0.000	0.000	0.000	0.000
0	0.000	0.000	0.000	0.000	0.000	0.000	0.000	0.000
0	0.000	0.000	0.000	0.000	0.000	0.000	0.000	0.000
0	0.000	0.000	0.000	0.000	0.000	0.000	0.000	0.000
0	0.000	0.000	0.000	0.000	0.000	0.000	0.000	0.000
0	0.000	0.000	0.000	0.000	0.000	0.000	0.000	0.000
0	0.000	0.000	0.000	0.000	0.000	0.000	0.000	0.000
TOTAL	15.750	1.563	3.150	0.313	5.481	0.544	1.096	0.109

Crushing and Screening	PM				PM-10			
	Uncontrolled		Controlled		Uncontrolled		Controlled	
	lb/hr	TPY	lb/hr	TPY	lb/hr	TPY	lb/hr	TPY
TOTAL	16.082	1.653	3.216	0.331	5.647	0.589	1.129	0.118

1. Emissions From CRUSHING AND SCREENING (Continued)

EMISSION FACTORS

source: AP42, Fifth Edition, Revised 08/2004

(lb/ton of material throughput)

PM	
Primary Crushing	0.002
Tertiary Crushing	0.0054
Screening	0.025

PM-10	
Primary Crushing	0.001
Tertiary Crushing	0.0024
Screening	0.0087

2. Emissions From TRANSFER POINTS

Transfer Point ID No.	PM				PM-10			
	Uncontrolled		Controlled		Uncontrolled		Controlled	
	lb/hr	TPY	lb/hr	TPY	lb/hr	TPY	lb/hr	TPY
TP1	0.495	0.083	0.495	0.083	0.234	0.039	0.234	0.039
TP2	0.495	0.083	0.495	0.083	0.234	0.039	0.234	0.039
TP3	0.246	0.041	0.246	0.041	0.116	0.020	0.116	0.020
TP4	0.246	0.041	0.246	0.041	0.116	0.020	0.116	0.020
TP5	0.246	0.041	0.246	0.041	0.116	0.020	0.116	0.020
TP6	0.246	0.041	0.246	0.041	0.116	0.020	0.116	0.020
TP7	0.495	0.083	0.495	0.083	0.234	0.039	0.234	0.039
TP8	0.495	0.083	0.495	0.083	0.234	0.039	0.234	0.039
TP9	0.495	0.083	0.495	0.083	0.234	0.039	0.234	0.039
TP10	0.495	0.083	0.495	0.083	0.234	0.039	0.234	0.039
TP11	0.275	0.073	0.275	0.073	0.130	0.035	0.130	0.035
TP12	0.825	0.138	0.825	0.138	0.390	0.065	0.390	0.065
TP13	0.825	0.138	0.825	0.138	0.390	0.065	0.390	0.065
TP14	0.110	0.018	0.110	0.018	0.052	0.009	0.052	0.009
TP15	0.110	0.018	0.110	0.018	0.052	0.009	0.052	0.009
TP16	0.330	0.055	0.330	0.055	0.156	0.026	0.156	0.026
TP17	0.330	0.055	0.330	0.055	0.156	0.026	0.156	0.026
TP18	0.330	0.055	0.330	0.055	0.156	0.026	0.156	0.026
TP19	0.165	0.165	0.165	0.165	0.078	0.078	0.078	0.078
TP20	0.165	0.165	0.165	0.165	0.078	0.078	0.078	0.078
TP21	0.165	0.165	0.165	0.165	0.078	0.078	0.078	0.078
TP22	0.165	0.165	0.165	0.165	0.078	0.078	0.078	0.078
TP23	0.136	0.138	0.136	0.138	0.064	0.065	0.064	0.065
TP24	0.136	0.138	0.136	0.138	0.064	0.065	0.064	0.065
TP25	0.165	0.165	0.165	0.165	0.078	0.078	0.078	0.078
TP26	0.165	0.165	0.165	0.165	0.078	0.078	0.078	0.078
TP27	1.100	1.100	1.100	1.100	0.520	0.520	0.520	0.520
TP28	1.100	1.100	1.100	1.100	0.520	0.520	0.520	0.520
TP29	0.165	0.165	0.083	0.083	0.078	0.078	0.039	0.039
TP30	0.165	0.165	0.033	0.033	0.078	0.078	0.016	0.016
TP31	0.165	0.165	0.033	0.033	0.078	0.078	0.016	0.016
TP32	0.165	0.165	0.033	0.033	0.078	0.078	0.016	0.016
TP33	0.165	0.165	0.033	0.033	0.078	0.078	0.016	0.016
TP34	0.165	0.165	0.033	0.033	0.078	0.078	0.016	0.016
TP35	1.100	1.100	0.220	0.220	0.520	0.520	0.104	0.104
TP36	1.100	1.100	0.220	0.220	0.520	0.520	0.104	0.104
TP37	1.100	1.100	0.220	0.220	0.520	0.520	0.104	0.104
TP38	1.100	1.100	0.220	0.220	0.520	0.520	0.104	0.104
0	0.000	0.000	0.000	0.000	0.000	0.000	0.000	0.000
0	0.000	0.000	0.000	0.000	0.000	0.000	0.000	0.000
0	0.000	0.000	0.000	0.000	0.000	0.000	0.000	0.000
0	0.000	0.000	0.000	0.000	0.000	0.000	0.000	0.000
0	0.000	0.000	0.000	0.000	0.000	0.000	0.000	0.000
0	0.000	0.000	0.000	0.000	0.000	0.000	0.000	0.000
0	0.000	0.000	0.000	0.000	0.000	0.000	0.000	0.000
0	0.000	0.000	0.000	0.000	0.000	0.000	0.000	0.000
0	0.000	0.000	0.000	0.000	0.000	0.000	0.000	0.000
0	0.000	0.000	0.000	0.000	0.000	0.000	0.000	0.000
0	0.000	0.000	0.000	0.000	0.000	0.000	0.000	0.000
0	0.000	0.000	0.000	0.000	0.000	0.000	0.000	0.000
0	0.000	0.000	0.000	0.000	0.000	0.000	0.000	0.000
0	0.000	0.000	0.000	0.000	0.000	0.000	0.000	0.000

2. *Emissions From TRANSFER POINTS (continued)*

Transfer Point ID No.	PM				PM-10			
	Uncontrolled		Controlled		Uncontrolled		Controlled	
	lb/hr	TPY	lb/hr	TPY	lb/hr	TPY	lb/hr	TPY
0	0.000	0.000	0.000	0.000	0.000	0.000	0.000	0.000
0	0.000	0.000	0.000	0.000	0.000	0.000	0.000	0.000
0	0.000	0.000	0.000	0.000	0.000	0.000	0.000	0.000
0	0.000	0.000	0.000	0.000	0.000	0.000	0.000	0.000
TOTALS	15.942	10.067	11.679	5.804	7.540	4.761	5.524	2.745

Source:
AP42, Fifth Edition, Revised 11/2006
13.2.4 Aggregate Handling and Storage Piles

Emissions From Batch Drop

E = k*(0.0032) * [(U/5)^1.3]/[(M/2)^1.4] = pounds/ton

Where:

		PM	PM-10
k =	Particle Size Multiplier (dimensionless)	0.74	0.35
U =	Mean Wind Speed (mph)		
M =	Material Moisture Content (%)		

Assumptions:

k - Particle size multiplier
For PM (< or equal to 30um) k = 0.74
For PM-10 (< or equal to 10um) k = 0.35

Emission Factor
For PM E= $I$88*(0.0032)*((((Inputs!$I$72)/5)^1.3)/(((Inputs!G78+0.000000001)/2)^1.4))
=lb/ton

For PM-10 E= $J$88*(0.0032)*((((Inputs!$I$72)/5)^1.3)/(((Inputs!G78+0.000000001)/2)^1.4))
=lb/ton

For lb/hr [lb/ton]*[ton/hr] = [lb/hr]

For Tons/year [lb/ton]*[ton/yr]*[ton/2000lb] = [ton/yr]

3. *Emissions From WIND EROSION OF STOCKPILES*

Stockpile ID No.	PM				PM-10			
	Uncontrolled		Controlled		Uncontrolled		Controlled	
	lb/hr	TPY	lb/hr	TPY	lb/hr	TPY	lb/hr	TPY
OSP1	0.013	0.056	0.006	0.028	0.006	0.026	0.003	0.013
OSP2	0.013	0.056	0.006	0.028	0.006	0.026	0.003	0.013
OSP3	0.026	0.112	0.013	0.056	0.012	0.053	0.006	0.026
OSP4	0.026	0.112	0.013	0.056	0.012	0.053	0.006	0.026
OSP5	0.026	0.112	0.013	0.056	0.012	0.053	0.006	0.026
OSP6	0.026	0.112	0.013	0.056	0.012	0.053	0.006	0.026
OSP7	0.038	0.168	0.019	0.084	0.018	0.079	0.009	0.040
OSP8	0.038	0.168	0.019	0.084	0.018	0.079	0.009	0.040
OSP9	0.031	0.134	0.015	0.067	0.014	0.063	0.007	0.032
OSP10	0.031	0.134	0.015	0.067	0.014	0.063	0.007	0.032
OSP11	0.026	0.112	0.013	0.056	0.012	0.053	0.006	0.026
OSP12	0.012	0.051	0.006	0.025	0.005	0.024	0.003	0.012
OSP13	0.012	0.051	0.006	0.025	0.005	0.024	0.003	0.012
OSP14	0.015	0.067	0.008	0.034	0.007	0.032	0.004	0.016
OSP15	0.015	0.067	0.015	0.067	0.007	0.032	0.007	0.032
OSP16	0.008	0.034	0.008	0.034	0.004	0.016	0.004	0.016
OSP17	0.015	0.067	0.015	0.067	0.007	0.032	0.007	0.032
OSP18	0.008	0.034	0.008	0.034	0.004	0.016	0.004	0.016
0	0.000	0.000	0.000	0.000	0.000	0.000	0.000	0.000
0	0.000	0.000	0.000	0.000	0.000	0.000	0.000	0.000
TOTALS	0.376	1.649	0.211	0.925	0.177	0.775	0.099	0.435

Source:
Air Pollution Engineering Manual

Storage Pile Wind Erosion (Active Storage)

E = 1.7*[s/1.5]*[(365-p)/235]*[f/15] = (lb/day/acre)

Where:

s =	silt content of material
p =	number of days with >0.01 inch of precipitation per year
f =	percentage of time that the unobstructed wind speed
	exceeds 12 mph at the mean pile height

Emission Factors

For PM E=(1.7)*((Inputs!F147)/1.5)*((365-Inputs!I139)/235)*((Inputs!I140)/15)

For PM-10 E=0.47*(1.7)*((Inputs!F147)/1.5)*((365-Inputs!I139)/235)*((Inputs!I140)/15)

For lb/hr [lb/day/acre]*[day/24hr]*[base area of pile (acres)] = lb/hr

For Ton/yr [lb/day/acre]*[365day/yr]*[Ton/2000lb]*[base area of pile (acres)] = Ton/yr

4. Emissions From UNPAVED HAULROADS

Item No.	PM				PM-10			
	Uncontrolled		Controlled		Uncontrolled		Controlled	
	lb/hr	TPY	lb/hr	TPY	lb/hr	TPY	lb/hr	TPY
1	0.00	0.00	0.00	0.00	0.00	0.00	0.00	0.00
2	0.00	0.00	0.00	0.00	0.00	0.00	0.00	0.00
3	0.00	0.00	0.00	0.00	0.00	0.00	0.00	0.00
4	0.00	0.00	0.00	0.00	0.00	0.00	0.00	0.00
5	0.00	0.00	0.00	0.00	0.00	0.00	0.00	0.00
6	0.00	0.00	0.00	0.00	0.00	0.00	0.00	0.00
7	0.00	0.00	0.00	0.00	0.00	0.00	0.00	0.00
8	0.00	0.00	0.00	0.00	0.00	0.00	0.00	0.00
TOTALS	0.00	0.00	0.00	0.00	0.00	0.00	0.00	0.00

Source:
AP42, Fifth Edition, Revised 11/2006
13.2.2 Unpaved Roads

Emission Estimate For Unpaved Haulroads at Industrial Sites (equation 1)

E= k*((s/12)^a)*((W/3)^b) =lb/vmt

Where:

		PM	PM-10
k =	particle size multiplier	4.90	1.50
a =	empirical constant	0.7	0.9
b =	empirical constant	0.45	0.45

Emission Factors

For PM E= (($I$35)*(((Inputs!$I$163)/12)^($I$36))*(((Inputs!H171)/3)^$I$37))

For PM-10 E= (($J$35)*(((Inputs!$I$163)/12)^($J$36))*(((Inputs!H171)/3)^$J$37))

For lb/hr (lb/vmt)*(miles per trip)*(Max trips per hour)

For Ton/yr (lb/vmt)*(miles per trip)*(Max trips per year)*(1/2000)

5. *Emissions From INDUSTRIAL PAVED HAULROADS*

Item No.	PM				PM-10			
	Uncontrolled		Controlled		Uncontrolled		Controlled	
	lb/hr	TPY	lb/hr	TPY	lb/hr	TPY	lb/hr	TPY
1	162.08	27.16	48.62	8.15	31.62	5.30	9.49	1.59
2	12.81	12.96	12.81	12.96	2.50	2.53	2.50	2.53
3	173.03	28.90	51.91	8.67	33.76	5.64	10.13	1.69
4	183.93	30.72	55.18	9.21	35.89	5.99	10.77	1.80
5	0.00	0.00	0.00	0.00	0.00	0.00	0.00	0.00
6	0.00	0.00	0.00	0.00	0.00	0.00	0.00	0.00
7	0.00	0.00	0.00	0.00	0.00	0.00	0.00	0.00
8	0.00	0.00	0.00	0.00	0.00	0.00	0.00	0.00
TOTALS	531.84	99.73	168.52	38.99	103.77	19.46	32.88	7.61

Source:
AP42, Fifth Edition, Revised 11/2006
13.2.1 PAVED ROADS

Emission Estimate For Paved Haulroads

E = [k * (sL/2)^0.65 * (W/3)^1.5 - C] * (1 - (P/4*N) = lb / Vehicle Mile Traveled (VMT)

Where:

		PM	PM-10
k =	particle size multiplier	0.082	0.016
sL =	road surface silt loading, (g/ft^2)	70	
P =	number of days per year with precipitation >0.01 inch	157	
N =	number of days in averaging period	365	
C=	factor for exhaust, brake wear and tire wear	0.00047	0.00047

Emission Factors

For PM E= ($I$34*((($I$35)/2)^0.65)*(((Inputs!G190)/3)^1.5)-($I$38))*(1-((Inputs!$I$1

For PM-10 E= ($J$34)*((($I$35)/2)^0.65)*(((Inputs!G190)/3)^1.5))-($I$38))*(1-((Inputs!I

For lb/hr (lb/vmt)*(miles per trip)*(Max trips per hour)

For Ton/yr (lb/vmt)*(miles per trip)*(Max trips per year)*(1/2000)

MAXIMUM EMISSIONS

EMISSION	LBS/HR	X	MAXIMUM HRS	/	2000 LB	=	MAXIMUM EMISSIONS
TOTAL PARTICLE EMISSION	9.82	X	3840	/	2000	=	18.85
PM from Stockpiles, Haulroads and Transfer Points		=	46.05				
PM10	6.4	X	3840	/	2000	=	12.29
PM10 from Stockpiles, Haulroads and Transfer Points		=	10.91				
SULFUR OXIDES (SOx)	1.020	X	3840	/	2000	=	1.96
CARBON MONOXIDE (CO)	39	X	3840	/	2000	=	74.88
NITROGEN OXIDES (NOx)	7.8	X	3840	/	2000	=	14.98
V.O.C. (as METHANE)	9.6	X	3840	/	2000	=	18.43

MAXIMUM EMISSIONS Δ

EMISSION	LBS/HR	X	MAXIMUM HRS Δ	/	2000 LB	=	MAXIMUM EMISSIONS
TOTAL PARTICLE EMISSION	9.82	X	1240	/	2000	=	6.09
PM from Stockpiles, Haulroads and Transfer Points		=	18.21				
PM10	6.4	X	1240	/	2000	=	3.97
PM10 from Stockpiles, Haulroads and Transfer Points		=	4.45				
SULFUR OXIDES (SOx)	1.020	X	1240	/	2000	=	0.63
CARBON MONOXIDE (CO)	39	X	1240	/	2000	=	24.18
NITROGEN OXIDES (NOx)	7.8	X	1240	/	2000	=	4.84
V.O.C. (as METHANE)	9.6	X	1240	/	2000	=	5.95

SUMMARY OF INPUTS AND RESULTS

FUEL CALCULATIONS

EQUIVALENT AMOUNT-GALLONS OF #2 FUEL OIL USED =	9.08 gpm
AMOUNT OF NATURAL GAS USED=	79029.9 ft^3/hr

EMISSIONS AT STACK

ENGINEERING PARTICLE EMISSION ESTIMATE=	9.82 lb/hr
ENGINEERING PARTICLE EMISSION ESTIMATE=	0.040 Grains/DSCFM

Following Emission Estimations are based on Federal Standard AP-42 for Drum Mix Hot Mix Asphalt Plants:

	EMISSION FACTORS (lbs emitted/ton)	MAX: EMISSION RATE FOR A 300 ton/hr PRODUCTION RATE (lb/hr of pollutant)
PARTICLE EMISSION	0.033	9.82
PM10	0.07	6.4
SULFUR OXIDES (so_x)	0.0034	1.02
CARBON MONOXIDE	0.13	39
NITROGEN OXIDES (no_x)	0.0260	7.8
VOC as METHANE	0.0320	9.6

ATTACHMENT O

MONITORING/RECORDKEEPING REPORTING/TESTING PLANS

ATTACHMENT O

MONITORING, RECORDKEEPING, REPORTING, AND TESTING PLANS

This is an existing facility that will continue monitoring, record keeping, and testing/reporting as required by the existing permit standards.

ATTACHMENT P

PUBLIC NOTICE

AIR QUALITY PERMIT NOTICE
Notice of Application

Notice is given that J. F. Allen Company has applied to the West Virginia Department of Environmental Protection, Division of Air Quality, for a Modification Permit for a Hot Mix Asphalt Plant located on Saltwell Road (Route 131), near Bridgeport, in Harrison County, West Virginia. The latitude and longitude coordinates are: 39.3409464 and -80.2375992

The applicant estimates the increased potential to discharge the following Regulated Air Pollutants will be: Total particulate matter emissions of 25 tons, particulate matter under 10 microns of 9 tons, sulfur dioxide of 1 ton, carbon monoxide of 25 tons, nitrogen oxides of 5 tons, Volatile Organic Compound as Methane of 6 tons per year.

Startup of operation is planned to begin on or about the 1 day of August, 2016. Written comments will be received by the West Virginia Department of Environmental Protection, Division of Air Quality, 601 57th Street, SE, Charleston, WV 25304, for at least 30 calendar days from the date of publication of this notice.

Any questions regarding this permit application should be directed to the DAQ at (304) 926-0499, extension 1250, during normal business hours.
Dated this the (Day) day of (Month), 2016.

By: J. F. Allen Company
Rose Riggs
Safety and Environmental Manager
PO Box 2049
Buckhannon, WV 26201

Attachment R
AUTHORITY OF CORPORATION
OR OTHER BUSINESS ENTITY (DOMESTIC OR FOREIGN)

TO: The West Virginia Department of Environmental Protection, Division of Air Quality

DATE: 7-20, 2016

ATTN.: Director

Corporation's / other business entity's Federal Employer I.D. Number 55-0328627

The undersigned hereby files with the West Virginia Department of Environmental Protection, Division of Air Quality, a permit application and hereby certifies that the said name is a trade name which is used in the conduct of an incorporated business or other business entity.

Further, the corporation or the business entity certifies as follows:

(1) ROSE E. RIGGS (is/are) the authorized representative(s) and in that capacity may represent the interest of the corporation or the business entity and may obligate and legally bind the corporation or the business entity.

(2) The corporation or the business entity is authorized to do business in the State of West Virginia.

(3) If the corporation or the business entity changes its authorized representative(s), the corporation or the business entity shall notify the Director of the West Virginia Department of Environmental Protection, Division of Air Quality, immediately upon such change.

Rose E. Riggs

President or Other Authorized Officer
(Vice President, Secretary, Treasurer or other official in charge of a principal business function of the corporation or the business entity)

(If not the President, then the corporation or the business entity must submit certified minutes or bylaws stating legal authority of other authorized officer to bind the corporation or the business entity).

Secretary

Name of Corporation or business entity