INTERNAL PERMITTING DOCUMENT TRACKING MANIFEST

Company Name HEP Shalewater Solutions, LLC

Permitting Action Number R13-3317 Total Days 49 DAQ Days 9

Permitting Action:

- ○ Permit Determination
- ○ General Permit
- ○ Administrative Update
- ○ Temporary
- ○ Relocation
- ✓ Construction
- ○ Modification
- ○ PSD (Rule 14)
- ○ NNSR (Rule 19)

Documents Attached:

- ✓ Engineering Evaluation/Memo
- ✓ Draft Permit
- ✓ Notice
- ○ Denial
- ○ Final Permit/General Permit Registration
- ○ Completed Database Sheet
- ○ Withdrawal
- ○ Letter
- ○ Other *(specify)*

Date	From	To	Action Requested
6/24/2016	Jerry	Bev	Please review for notice
6/27	Bev	Jerry	See Comments - Addition - Return
6/27	Jerry	Bev	Please Review.
6/28	Bev	Jerry	Ok to Notice
6/28	Jerry	Sandie	Approved for notice.

NOTE: Retain a copy of this manifest for your records when transmitting your document(s).

Engineer	Jerry Williams, P.E.
Email Address	jerry.williams@wv.gov
Company Name	HEP Shalewater Solutions, LLC
Company ID	017-00160
Facility Name	Central Station Facility
Permit Number	R13-3317
County	Doddridge
Newspaper	*The Doddridge Independent*
Company Email and "Attention To:"	Tony Gutta tgutta@shalewater.com
Environmental Contact Email Address	Ryan Hall rhall@shalewater.com
Regional Office (if applicable)	NA
New or Modified Source?	new
Construction, Modification, or Relocation?	construction
Type of Facility	natural gas compressor station
"Located" or "To Be Located"?	to be located
Place where I can find electronic versions of your notice, engineering evaluation, and draft permit	Q:\AIR_QUALITY\J_Willi\\Permit Applications Under Review\HEP Shalewater Solutions\R13-3317 Central Station Facility

AIR QUALITY PERMIT NOTICE

Notice of Intent to Approve

On May 6, 2016, HEP Shalewater Solutions, LLC applied to the WV Department of Environmental Protection, Division of Air Quality (DAQ) for a permit to construct and operate a reclaimed water (water from the oil and gas industry) facility located on County Road 11, near West Union, Doddridge County, WV at latitude 39.28080 and longitude -80.81253. A preliminary evaluation has determined that all State and Federal air quality requirements will be met by the proposed facility. The DAQ is providing notice to the public of its preliminary determination to issue the permit as R13-3317.

The following potential emissions will be authorized by this permit action: Particulate Matter less than 10 microns, 30.22 tons per year (TPY); Volatile Organic Compounds, 21.37 TPY; Total Hazardous Air Pollutants, 0.47 TPY.

Written comments or requests for a public meeting must be received by the DAQ before 5:00 p.m. on (Day of Week, Month, Day, Year). A public meeting may be held if the Director of the DAQ determines that significant public interest has been expressed, in writing, or when the Director deems it appropriate.

The purpose of the DAQ's permitting process is to make a preliminary determination if the proposed construction will meet all state and federal air quality requirements. The purpose of the public review process is to accept public comments on air quality issues relevant to this determination. Only written comments received at the address noted below within the specified time frame, or comments presented orally at a scheduled public meeting, will be considered prior to final action on the permit. All such comments will become part of the public record.

Jerry Williams, P.E.
WV Department of Environmental Protection
Division of Air Quality
601 57th Street, SE
Charleston, WV 25304
Telephone: 304/926-0499, ext. 1223
FAX: 304/926-0478

Additional information, including copies of the draft permit, application and all other supporting materials relevant to the permit decision may be obtained by contacting the engineer listed above. The draft permit and engineering evaluation can be downloaded at:

www.dep.wv.gov/daq/Pages/NSRPermitsforReview.aspx

west virginia department of environmental protection

Division of Air Quality
601 57th Street SE
Charleston, WV 25304
Phone (304) 926-0475 • FAX: (304) 926-0479

Earl Ray Tomblin, Governor
Randy C. Huffman, Cabinet Secretary
www.dep.wv.gov

ENGINEERING EVALUATION / FACT SHEET

BACKGROUND INFORMATION

Application No.:	R13-3317
Plant ID No.:	017-00160
Applicant:	HEP Shalewater Solutions, LLC (HEP)
Facility Name:	Central Station
Location:	West Union, Doddridge County
NAICS Code:	213112 (Support Activities for Oil and Gas Operations)
Application Type:	Construction
Received Date:	May 6, 2016
Engineer Assigned:	Jerry Williams, P.E.
Fee Amount:	$1,000.00
Date Received:	May 6, 2016
Complete Date:	June 15, 2016
Due Date:	September 13, 2016
Applicant Ad Date	May 13, 2016
Newspaper:	*The Doddridge Independent*
UTM's:	Easting: 516.169 km Northing: 4,347.955 km Zone: 17
Description:	Oil and gas water treatment facility.

DESCRIPTION OF PROCESS

The following process description was taken from Permit Application R13-3317:

Waters, typically high in Total Suspended Solids (TSS), generated by Oil and Gas Exploration and Production activities will be collected in atmospheric tanker trucks at various client locations and sent to Central Station for recycle. Since all influent liquids have been subjected to significant weathering in an open atmosphere condition, flash emissions have occurred prior to shipping to Central Station. When a truck enters the facility, a sample will be collected and reviewed to determine if the material is acceptable. Unacceptable materials will be

immediately rejected. Acceptable material will be offloaded (W2; 42E) via electrically operated pumps and sent to the influent storage tanks (ITS1-16; 1E-16E) via the influent header pipe system. If upon triage, trucks are determined to have an influent with a TSS >50,000 mg/L the client will have the option to bypass treatment and go directly to the filter press. From the influent tanks the water will flow through a series of static mixers (WT1-2; 17E-18E) where treatment chemicals to adjust pH and flocculants to settle solids will be added. Treatment chemicals are brought to the site in totes and stored in four 300-gallon day tanks (DT1-4; 44E-47E). The materials, including sodium hydroxide, flocculants and settling agents, are non-volatile and will not contribute any criteria pollutant emissions. The water will then pass through a series of settling tanks (ST1-5; 19E-23E) allowing time for solids to settle. The post treatment water then flows to multiple effluent holding tanks (ET1-12; 24E-35E). From the holding tanks the water is pumped back into tanker trucks for reuse at oil and gas facilities. Additionally, a brine mixing tank may possibly be installed at the facility. A portion of effluent water would flow from the holding tanks to the 90 bbl open top brine mixing tank (BM1; 39E), which would employ two electrical pumps to mix salt and water up to a desired specific gravity. If installed, emissions from the brine mixing process would be de minimis. Collected solids are pumped to several dewatering tanks where liquids are allowed settle (SI1-2; 36E-37E). The sludge is the processed through a filter press to render the wet cake material acceptable for landfilling (FT1; 38E). Any water decanted or pressed from the sludge is used for recycling purposes.

SITE INSPECTION

A site inspection was conducted on June 1, 2016 by the Doug Hammell of DAQ Enforcement Section. Equipment was located on site, but not operational. Mr. Hammell found the site suitable for the proposed operation.

Latitude: 39.2808
Longitude: -80.8125

Directions to the facility are as follows:

From West Union: Facility located off of US-50 approximately 0.15 miles on County Route 11 (Arnolds Creek Road).

ESTIMATE OF EMISSIONS BY REVIEWING ENGINEER

Emissions associated with this application consist of sixteen (16) 21,000 gallon influent storage tanks (1E-16E), two (2) 21,000 gallon weir tanks (17E-18E), five (5) 21,000 gallon settling tanks (19E-23E), twelve (12) 21,000 gallon effluent storage tanks (24E-35E), two (2) 21,000 gallon sludge influent tanks (36E, 37E), one (1) 21,000 gallon filtrate water tank (38E), one (1) 3,780 gallon brine mixing tank (39E), water loading (40E, 42E), and sludge loadout (41E). Fugitive emissions from the facility are negligible due to the fact that most processes are in the liquid phase.

The following table indicates which methodology was used in the emissions determination:

Emission Point ID#	Process Equipment	Calculation Methodology
1E-16E	21,000 gallon Influent Storage Tanks	EPA Tanks 4.09d
17E-18E	21,000 gallon Weir Tanks	EPA Tanks 4.09d
19E-23E	21,000 gallon Settling Tanks	EPA Tanks 4.09d
24E-35E	21,000 gallon Effluent Storage Tanks	EPA Tanks 4.09d
36E-37E	21,000 gallon Sludge Influent Tanks	EPA Tanks 4.09d
38E	21,000 gallon Filtrate Water Tank	EPA Tanks 4.09d
39E	3,780 gallon Brine Mixing Tank	EPA Tanks 4.09d
40E	420,000 gal/day Water Load out	EPA AP-42 Emission Factors
41E	29,400 gal/day Sludge Load out	EPA AP-42 Emission Factors
42E	420,000 gal/day Water Load in	EPA AP-42 Emission Factors
Fugitive Dust	Vehicle Travel on Facility Roads	EPA AP-42 Emission Factors

The total facility PTE for the Central Station facility is shown in the following table:

Pollutant	R13-3317 PTE (tons/year)
Volatile Organic Compounds	21.37
Particulate Matter-10	30.22
Total HAPs	0.47

Maximum detailed controlled point source emissions were calculated by HEP and checked for accuracy by the writer and are summarized in the table on the next page.

HEP Shalewater Solutions, LLC – Central Station (R13-3317)

Emission Point ID#	Source	VOC		Total HAPs		PM-10	
		lb/hr	ton/year	lb/hr	ton/year	lb/hr	ton/year
1E-16E	16 Influent Tanks	0.50	2.19	0.01	0.05	0.00	0.00
17E-18E	2 Weir Tanks	0.66	2.89	0.01	0.06	0.00	0.00
19E-23E	5 Settling Tanks	1.65	7.23	0.04	0.16	0.00	0.00
24E-35E	12 Effluent Tanks	0.44	1.97	0.01	0.05	0.00	0.00
36E-37E	2 Sludge Influent Tanks	0.09	0.37	0.00	0.01	0.00	0.00
38E	Filtrate Water Tank	0.03	0.13	0.00	0.00	0.00	0.00
39E	Brine Mixing Tank	0.00	0.01	0.00	0.00	0.00	0.00
40E	Water Load out	0.73	3.18	0.02	0.07	0.00	0.00
41E	Sludge Load out	0.05	0.22	0.00	0.01	0.00	0.00
42E	Water Load in	0.73	3.18	0.02	0.07	0.00	0.00
Total Point Source		**4.88**	**21.37**	**0.11**	**0.47**	**0.00**	**0.00**
FUG	Fugitive Dust Emissions	0.00	0.00	0.00	0.00	6.90	30.22
Total Fugitive		**0.00**	**0.00**	**0.00**	**0.00**	**6.90**	**30.22**
Total Sitewide		**4.88**	**21.37**	**0.11**	**0.47**	**6.90**	**30.22**

REGULATORY APPLICABILITY

The following rules apply to the facility:

45CSR13 (Permits for Construction, Modification, Relocation and Operation of Stationary Sources of Air Pollutants, Notification Requirements, Administrative Updates, Temporary Permits, General Permits, and Procedures for Evaluation)

A 45CSR13 construction permit applies to this source due to the fact that HEP exceeds the regulatory emission threshold for criteria pollutants of 6 lbs/hr and 10 tons/year of a regulated air pollutant.

HEP paid the appropriate application fee and published the required legal advertisement for a construction permit application.

45CSR22 (Air Quality Management Fee Program)

This facility is a minor source and not subject to 45CSR30. HEP is required to keep their Certificate to Operate current.

The following rules do not apply to the facility:

45CSR14 (Permits for Construction and Major Modification of Major Stationary Sources of Air Pollutants)

45CSR19 (Permits for Construction and Major Modification of Major Stationary Sources of Air Pollution which Cause or Contribute to Nonattainment)

The Central Station is located in Doddridge County, which is an unclassified county for all criteria pollutants, therefore it is not applicable to 45CSR19.

As shown in the following table, HEP is not a major source subject to 45CSR14 or 45CSR19 review. According to 45CSR14 Section 2.43.e, fugitive emissions are not included in the major source determination because it is not listed as one of the source categories in Table 1. Therefore, the fugitive emissions are not included in the PTE on the following page.

Pollutant	**PSD (45CSR14) Threshold (tpy)**	**NANSR (45CSR19) Threshold (tpy)**	**Central Station PTE (tpy)**	**45CSR14 or 45CSR19 Review Required?**
Carbon Monoxide	250	NA	0	No
Nitrogen Oxides	250	NA	0	No
Sulfur Dioxide	250	NA	0	No
Particulate Matter-10	250	NA	0	No
Ozone (VOC)	250	NA	21.37	No

40CFR60 Subpart Kb (Standards of Performance for Volatile Organic Liquid Storage Vessels)

The affected facility to which this subpart applies is each storage vessel with a capacity greater than or equal to 75 cubic meters (m^3) (19,813 gallons) that is used to store volatile organic liquids (VOL) for which construction, reconstruction, or modification is commenced after July 23, 1984. This subpart does not apply to storage vessels with a capacity greater than or equal to 151 m^3 storing a liquid with a maximum true vapor pressure less than 3.5 kilopascals (kPa) or with a capacity greater than or equal to 75 m^3 but less than 151 m^3 storing a liquid with a maximum true vapor pressure less than 15.0 kPa. This subpart also does not apply to pressure vessels designed to operate in excess of 204.9 kPa and without emissions to the atmosphere.

There are tanks located at Central Station that are greater than 75 m^3 but less than 151 m^3, however the vapor pressure of the liquids being stored are less than 15.0 kPa (2.175 psia). Therefore, 40 CFR60 Subpart Kb is not applicable to the storage vessels at Central Station.

40CFR60 Subpart OOOO (Standards of Performance for Crude Oil and Natural Gas Production, Transmission and Distribution for which Construction, Modification or Reconstruction Commenced after August 23, 2011, and on or before September 18, 2015)

EPA published in the Federal Register updates to new source performance standards (NSPS) on June 3, 2016. 40CFR60 Subpart OOOO establishes emission standards and compliance schedules for the control of volatile organic compounds (VOC) and sulfur dioxide (SO_2) emissions.

There are no affected sources located within the Central Station.

40CFR60 Subpart OOOOa (Standards of Performance for Crude Oil and Natural Gas Production, Transmission and Distribution for which Construction, Modification or Reconstruction Commenced after September 18, 2015)

EPA published in the Federal Register updates to new source performance standards (NSPS) on June 3, 2016. 40CFR60 Subpart OOOOa establishes emission standards and compliance schedules for the control of the pollutant greenhouse gases (GHG) in the form of a limitation on methane, volatile organic compounds (VOC) and sulfur dioxide (SO_2) emissions.

There are no affected sources located within the Central Station.

40CFR60 Subpart QQQ (Standards of Performance for VOC Emissions from Petroleum Refinery Wastewater Systems)

This rule applies to facilities constructed, modified or reconstructed after May 4, 1987 that operate an oil-water separator at a petroleum refinery.

There are no affected sources located within the Central Station.

40CFR63 Subpart DD (National Emission Standards for Hazardous Air Pollutants from Off-Site Waste and Recovery Operations)

This rule applies to certain provisions of wastewater treatment facilities that are a major source of HAPs. The Central Station is not a major source of HAPs, therefore, this rule would not apply.

TOXICITY OF NON-CRITERIA REGULATED POLLUTANTS

The majority of non-criteria regulated pollutants fall under the definition of HAPs which, with some revision since, were 188 compounds identified under Section 112(b) of the Clean Air Act (CAA) as pollutants or groups of pollutants that EPA knows or suspects may cause cancer or other serious human health effects. All HAPs have other non-carcinogenic chronic and acute effects. These adverse health effects may be associated with a wide range of ambient concentrations and exposure times and are influenced by source-specific characteristics such as emission rates and local meteorological conditions. Health impacts are also dependent on multiple factors that affect variability in humans such as genetics, age, health status (e.g., the presence of pre-existing disease) and lifestyle. As stated previously, *there are no federal or state ambient air quality standards for these specific chemicals*. For a complete discussion of the known health effects of each compound refer to the IRIS database located at *www.epa.gov/iris*. The total HAP emissions from this facility were calculated to be 0.455 tons per year.

AIR QUALITY IMPACT ANALYSIS

Modeling was not required of this source due to the fact that the facility is not subject to 45CSR14 (Permits for Construction and Major Modification of Major Stationary Sources of Air Pollutants) or 45CSR19 (Permits for Construction and Major Modification of Major Stationary Sources of Air Pollution which Cause or Contribute to Nonattainment) as shown in the table listed in the Regulatory Discussion section under 45CSR14/45CSR19.

SOURCE AGGREGATION

Classifying multiple facilities as one "stationary source" under 45CSR13, 45CSR14, and 45CSR19 is based on the definition of "Building, structure, facility, or installation" as given in §45-14-2.13 and §45-19-2.12. The definition states:

"Building, Structure, Facility, or Installation" means all of the pollutant-emitting activities which belong to the same industrial grouping, are located on one or more contiguous or adjacent properties, and are under the control of the same person (or persons under common control). Pollutant-emitting activities are a part of the same industrial grouping if they belong to the same "Major Group" (i.e., which have the same two (2)-digit code) as described in the Standard Industrial Classification Manual, 1987 (United States Government Printing Office stock number GPO 1987 0-185-718:QL 3).

The Source Determination Rule for the oil and gas industry was published in the Federal Register on June 3, 2016 and will become effective on August 2, 2016. EPA defined the term "adjacent" and stated that equipment and activities in the oil and gas sector that are under common control will be considered part of the same source if they are located on the same site or on sites that share equipment and are within ¼ mile of each other.

There are no other facilities under common control that are located on the same site or on sites that share equipment and are within ¼ mile of this facility. Therefore, the emissions from Central Station should not be aggregated with any other facility.

MONITORING OF OPERATIONS

HEP will be required to perform the following monitoring and recordkeeping:

- Monitor the storage tanks to ensure they are operated per manufacturer's specifications
- Monitor and record the throughput for the loadouts
- Maintain records of testing conducted in accordance with the permit
- Maintain a record of all potential to emit (PTE) HAP calculations for the entire facility.
- Monitor the water and sludge truck loading
- Wetcake disposal
- Quarterly AVO (audio, visual, olfactory) inspections
- The records shall be maintained on site or in a readily available off-site location maintained by HEP for a period of five (5) years.

RECOMMENDATION TO DIRECTOR

The information provided in the permit application indicates that HEP meets all the requirements of applicable regulations. Therefore, impact on the surrounding area should be minimized and it is recommended that the Central Station facility should be granted a 45CSR13 construction permit for their facility.

Jerry Williams, P.E.
Engineer

6/24/2016
Date

West Virginia Department of Environmental Protection

Earl Ray Tomblin
Governor

Division of Air Quality

Randy C. Huffman
Cabinet Secretary

Permit to Construct

R13- 3317

This permit is issued in accordance with the West Virginia Air Pollution Control Act (West Virginia Code §§22-5-1 et seq.) and 45 C.S.R. 13 – Permits for Construction, Modification, Relocation and Operation of Stationary Sources of Air Pollutants, Notification Requirements, Temporary Permits, General Permits and Procedures for Evaluation. The permittee identified at the above-referenced facility is authorized to construct the stationary sources of air pollutants identified herein in accordance with all terms and conditions of this permit.

Issued to:

HEP Shalewater Solutions, LLC
Central Station
017-00160

William F. Durham
Director

Issued: DRAFT

DRAFT

Table of Contents

1.0. Emission Units 4

2.0. General Conditions 5
2.1. Definitions 5
2.2. Acronyms 5
2.3. Authority 6
2.4. Term and Renewal 6
2.5. Duty to Comply 6
2.6. Duty to Provide Information 6
2.7. Duty to Supplement and Correct Information 7
2.8. Administrative Update 7
2.9. Permit Modification 7
2.10 Major Permit Modification 7
2.11. Inspection and Entry 7
2.12. Emergency 7
2.13. Need to Halt or Reduce Activity Not a Defense 8
2.14. Suspension of Activities 8
2.15. Property Rights 8
2.16. Severability 9
2.17. Transferability 9
2.18. Notification Requirements 9
2.19. Credible Evidence 9

3.0. Facility-Wide Requirements 10
3.1. Limitations and Standards 10
3.2. Monitoring Requirements 10
3.3. Testing Requirements 10
3.4. Recordkeeping Requirements 11
3.5. Reporting Requirements 12

4.0. Source-Specific Requirements 14
4.1. Limitations and Standards 14

5.0. Source-Specific Requirements [Storage Vessels (1E-39E)] 16
5.1. Limitations and Standards 16
5.2. Recordkeeping Requirements 17
5.3. Testing Requirements 17
5.4. Notification and Reporting Requirements 17

6.0. Source-Specific Requirements [Loading (40E-42E)] 18
6.1. Limitations and Standards 18
6.2. Recordkeeping Requirements 18

CERTIFICATION OF DATA ACCURACY 19

DRAFT

1.0. Emission Units

Emission Unit ID	Emission Point ID	Emission Unit Description	Year Installed	Design Capacity	Control Device
ITS1-16	1E-16E	16 Influent Storage Tanks	2016	21,000 gal each	None
W1-W2	17E-18E	2 Weir Tanks	2016	21,000 gal each	None
ST1-ST5	19E-23E	5 Settling Tanks	2016	21,000 gal each	None
ET1-ET12	24E-35E	12 Influent Tanks	2016	21,000 gal each	None
SL1-SL2	36E-37E	2 Sludge Influent Tanks	2016	21,000 gal each	None
FT1	38E	Filtrate Water Tank	2016	21,000 gal	None
BM1	39E	Brine Mixing Tank	2016	3,780 gal	None
W-1	40E	Water Load out	2016	420,000 gal/day	None
SL-1	41E	Sludge Load out	2016	29,400 gal/day	None
W-2	42E	Water Load in	2016	420,000 gal/day	None
DT1-DT4	44E-47E	4 Chemical Storage Day Tanks	2016	300 gal each	None

DRAFT

2.0. General Conditions

2.1. Definitions

2.1.1. All references to the "West Virginia Air Pollution Control Act" or the "Air Pollution Control Act" mean those provisions contained in W.Va. Code §§ 22-5-1 to 22-5-18.

2.1.2. The "Clean Air Act" means those provisions contained in 42 U.S.C. §§ 7401 to 7671q, and regulations promulgated thereunder.

2.1.3. "Secretary" means the Secretary of the Department of Environmental Protection or such other person to whom the Secretary has delegated authority or duties pursuant to W.Va. Code §§ 22-1-6 or 22-1-8 (45CSR§30-2.12.). The Director of the Division of Air Quality is the Secretary's designated representative for the purposes of this permit.

2.2. Acronyms

CAAA	Clean Air Act Amendments	**NOx**	Nitrogen Oxides
CBI	Confidential Business Information	**NSPS**	New Source Performance Standards
CEM	Continuous Emission Monitor	**PM**	Particulate Matter
CES	Certified Emission Statement	**$PM_{2.5}$**	Particulate Matter less than 2.5 µm in diameter
C.F.R. *or* CFR	Code of Federal Regulations		
CO	Carbon Monoxide	**PM_{10}**	Particulate Matter less than 10µm in diameter
C.S.R. *or* CSR	Codes of State Rules		
DAQ	Division of Air Quality	**Ppb**	Pounds per Batch
DEP	Department of Environmental Protection	**Pph**	Pounds per Hour
		Ppm	Parts per Million
dscm	Dry Standard Cubic Meter	**Ppmv or ppmv**	Parts per Million by Volume
FOIA	Freedom of Information Act		
HAP	Hazardous Air Pollutant	**PSD**	Prevention of Significant Deterioration
HON	Hazardous Organic NESHAP		
HP	Horsepower	**Psi**	Pounds per Square Inch
lbs/hr	Pounds per Hour	**SIC**	Standard Industrial Classification
LDAR	Leak Detection and Repair		
M	Thousand	**SIP**	State Implementation Plan
MACT	Maximum Achievable Control Technology	**SO_2**	Sulfur Dioxide
		TAP	Toxic Air Pollutant
MDHI	Maximum Design Heat Input	**TPY**	Tons per Year
MM	Million	**TRS**	Total Reduced Sulfur
MMBtu/hr *or* mmbtu/hr	Million British Thermal Units per Hour	**TSP**	Total Suspended Particulate
		USEPA	United States Environmental Protection Agency
MMCF/hr *or* mmcf/hr	Million Cubic Feet per Hour		
		UTM	Universal Transverse Mercator
NA	Not Applicable	**VEE**	Visual Emissions Evaluation
NAAQS	National Ambient Air Quality Standards	**VOC**	Volatile Organic Compounds
		VOL	Volatile Organic Liquids
NESHAPS	National Emissions Standards for Hazardous Air Pollutants		

DRAFT

2.3. Authority

This permit is issued in accordance with West Virginia Air Pollution Control Act W.Va. Code §§ 22-5-1. et seq. and the following Legislative Rules promulgated thereunder:

2.3.1. 45CSR13 – *Permits for Construction, Modification, Relocation and Operation of Stationary Sources of Air Pollutants, Notification Requirements, Temporary Permits, General Permits and Procedures for Evaluation*;

2.4. Term and Renewal

2.4.1. Permit shall remain valid, continuous and in effect unless it is revised, suspended, revoked or otherwise changed under an applicable provision of 45CSR13 or any other applicable legislative rule;

2.5. Duty to Comply

2.5.1. The permitted facility shall be constructed and operated in accordance with the plans and specifications filed in Permit Application R13-3317, and any modifications, administrative updates, or amendments thereto. The Secretary may suspend or revoke a permit if the plans and specifications upon which the approval was based are not adhered to;
[45CSR§§13-5.11 and 10.3.]

2.5.2. The permittee must comply with all conditions of this permit. Any permit noncompliance constitutes a violation of the West Virginia Code and the Clean Air Act and is grounds for enforcement action by the Secretary or USEPA;

2.5.3. Violations of any of the conditions contained in this permit, or incorporated herein by reference, may subject the permittee to civil and/or criminal penalties for each violation and further action or remedies as provided by West Virginia Code 22-5-6 and 22-5-7;

2.5.4. Approval of this permit does not relieve the permittee herein of the responsibility to apply for and obtain all other permits, licenses, and/or approvals from other agencies; i.e., local, state, and federal, which may have jurisdiction over the construction and/or operation of the source(s) and/or facility herein permitted.

2.6. Duty to Provide Information

The permittee shall furnish to the Secretary within a reasonable time any information the Secretary may request in writing to determine whether cause exists for administratively updating, modifying, revoking, or terminating the permit or to determine compliance with the permit. Upon request, the permittee shall also furnish to the Secretary copies of records to be kept by the permittee. For information claimed to be confidential, the permittee shall furnish such records to the Secretary along with a claim of confidentiality in accordance with 45CSR31. If confidential information is to be sent to USEPA, the permittee shall directly provide such information to USEPA along with a claim of confidentiality in accordance with 40 C.F.R. Part 2.

DRAFT

2.7. Duty to Supplement and Correct Information

Upon becoming aware of a failure to submit any relevant facts or a submittal of incorrect information in any permit application, the permittee shall promptly submit to the Secretary such supplemental facts or corrected information.

2.8. Administrative Update

The permittee may request an administrative update to this permit as defined in and according to the procedures specified in 45CSR13.
[45CSR§13-4.]

2.9. Permit Modification

The permittee may request a minor modification to this permit as defined in and according to the procedures specified in 45CSR13.
[45CSR§13-5.4.]

2.10 Major Permit Modification

The permittee may request a major modification as defined in and according to the procedures specified in 45CSR14 or 45CSR19, as appropriate.
[45CSR§13-5.1]

2.11. Inspection and Entry

The permittee shall allow any authorized representative of the Secretary, upon the presentation of credentials and other documents as may be required by law, to perform the following:

a. At all reasonable times (including all times in which the facility is in operation) enter upon the permittee's premises where a source is located or emissions related activity is conducted, or where records must be kept under the conditions of this permit;

b. Have access to and copy, at reasonable times, any records that must be kept under the conditions of this permit;

c. Inspect at reasonable times (including all times in which the facility is in operation) any facilities, equipment (including monitoring and air pollution control equipment), practices, or operations regulated or required under the permit; and

d. Sample or monitor at reasonable times substances or parameters to determine compliance with the permit or applicable requirements or ascertain the amounts and types of air pollutants discharged.

2.12. Emergency

2.12.1. An "emergency" means any situation arising from sudden and reasonable unforeseeable events beyond the control of the source, including acts of God, which situation requires immediate corrective action to restore normal operation, and that causes the source to exceed a technology-based emission limitation under the permit, due to unavoidable increases in emissions attributable to the emergency. An emergency shall not include noncompliance to the extent caused by

DRAFT

improperly designed equipment, lack of preventative maintenance, careless or improper operation, or operator error.

2.12.2. Effect of any emergency. An emergency constitutes an affirmative defense to an action brought for noncompliance with such technology-based emission limitations if the conditions of Section 2.12.3 are met.

2.12.3. The affirmative defense of emergency shall be demonstrated through properly signed, contemporaneous operating logs, or other relevant evidence that:

a. An emergency occurred and that the permittee can identify the cause(s) of the emergency;

b. The permitted facility was at the time being properly operated;

c. During the period of the emergency the permittee took all reasonable steps to minimize levels of emissions that exceeded the emission standards, or other requirements in the permit; and

d. The permittee submitted notice of the emergency to the Secretary within one (1) working day of the time when emission limitations were exceeded due to the emergency and made a request for variance, and as applicable rules provide. This notice must contain a detailed description of the emergency, any steps taken to mitigate emissions, and corrective actions taken.

2.12.4. In any enforcement proceeding, the permittee seeking to establish the occurrence of an emergency has the burden of proof.

2.12.5 The provisions of this section are in addition to any emergency or upset provision contained in any applicable requirement.

2.13. Need to Halt or Reduce Activity Not a Defense

It shall not be a defense for a permittee in an enforcement action that it should have been necessary to halt or reduce the permitted activity in order to maintain compliance with the conditions of this permit. However, nothing in this paragraph shall be construed as precluding consideration of a need to halt or reduce activity as a mitigating factor in determining penalties for noncompliance if the health, safety, or environmental impacts of halting or reducing operations would be more serious than the impacts of continued operations.

2.14. Suspension of Activities

In the event the permittee should deem it necessary to suspend, for a period in excess of sixty (60) consecutive calendar days, the operations authorized by this permit, the permittee shall notify the Secretary, in writing, within two (2) calendar weeks of the passing of the sixtieth (60) day of the suspension period.

2.15. Property Rights

This permit does not convey any property rights of any sort or any exclusive privilege.

DRAFT

2.16. Severability

The provisions of this permit are severable and should any provision(s) be declared by a court of competent jurisdiction to be invalid or unenforceable, all other provisions shall remain in full force and effect.

2.17. Transferability

This permit is transferable in accordance with the requirements outlined in Section 10.1 of 45CSR13. **[45CSR§13-10.1.]**

2.18. Notification Requirements

The permittee shall notify the Secretary, in writing, no later than thirty (30) calendar days after the actual startup of the operations authorized under this permit.

2.19. Credible Evidence

Nothing in this permit shall alter or affect the ability of any person to establish compliance with, or a violation of, any applicable requirement through the use of credible evidence to the extent authorized by law. Nothing in this permit shall be construed to waive any defense otherwise available to the permittee including, but not limited to, any challenge to the credible evidence rule in the context of any future proceeding.

DRAFT

3.0. Facility-Wide Requirements

3.1. Limitations and Standards

3.1.1. **Open burning.** The open burning of refuse by any person, firm, corporation, association or public agency is prohibited except as noted in 45CSR§6-3.1.
[45CSR§6-3.1.]

3.1.2. **Open burning exemptions.** The exemptions listed in 45CSR§6-3.1 are subject to the following stipulation: Upon notification by the Secretary, no person shall cause, suffer, allow or permit any form of open burning during existing or predicted periods of atmospheric stagnation. Notification shall be made by such means as the Secretary may deem necessary and feasible.
[45CSR§6-3.2.]

3.1.3. **Asbestos.** The permittee is responsible for thoroughly inspecting the facility, or part of the facility, prior to commencement of demolition or renovation for the presence of asbestos and complying with 40 C.F.R. § 61.145, 40 C.F.R. § 61.148, and 40 C.F.R. § 61.150. The permittee, owner, or operator must notify the Secretary at least ten (10) working days prior to the commencement of any asbestos removal on the forms prescribed by the Secretary if the permittee is subject to the notification requirements of 40 C.F.R. § 61.145(b)(3)(i). The USEPA, the Division of Waste Management, and the Bureau for Public Health - Environmental Health require a copy of this notice to be sent to them.
[40CFR§61.145(b) and 45CSR§34]

3.1.4. **Odor.** No person shall cause, suffer, allow or permit the discharge of air pollutants which cause or contribute to an objectionable odor at any location occupied by the public.
[45CSR§4-3.1] ***[State Enforceable Only]***

3.1.5. **Permanent shutdown.** A source which has not operated at least 500 hours in one 12-month period within the previous five (5) year time period may be considered permanently shutdown, unless such source can provide to the Secretary, with reasonable specificity, information to the contrary. All permits may be modified or revoked and/or reapplication or application for new permits may be required for any source determined to be permanently shutdown.
[45CSR§13-10.5.]

3.1.6. **Standby plan for reducing emissions.** When requested by the Secretary, the permittee shall prepare standby plans for reducing the emissions of air pollutants in accordance with the objectives set forth in Tables I, II, and III of 45CSR11.
[45CSR§11-5.2.]

3.2. Monitoring Requirements

[Reserved]

3.3. Testing Requirements

3.3.1. **Stack testing.** As per provisions set forth in this permit or as otherwise required by the Secretary, in accordance with the West Virginia Code, underlying regulations, permits and orders, the permittee shall conduct test(s) to determine compliance with the emission limitations set forth in this permit and/or established or set forth in underlying documents. The Secretary, or his duly authorized representative, may at his option witness or conduct such test(s). Should the Secretary exercise his option to conduct such test(s), the operator shall provide all necessary sampling

DRAFT

connections and sampling ports to be located in such manner as the Secretary may require, power for test equipment and the required safety equipment, such as scaffolding, railings and ladders, to comply with generally accepted good safety practices. Such tests shall be conducted in accordance with the methods and procedures set forth in this permit or as otherwise approved or specified by the Secretary in accordance with the following:

a. The Secretary may on a source-specific basis approve or specify additional testing or alternative testing to the test methods specified in the permit for demonstrating compliance with 40 C.F.R. Parts 60, 61, and 63 in accordance with the Secretary's delegated authority and any established equivalency determination methods which are applicable. If a testing method is specified or approved which effectively replaces a test method specified in the permit, the permit may be revised in accordance with 45CSR§13-4. or 45CSR§13-5.4 as applicable.

b. The Secretary may on a source-specific basis approve or specify additional testing or alternative testing to the test methods specified in the permit for demonstrating compliance with applicable requirements which do not involve federal delegation. In specifying or approving such alternative testing to the test methods, the Secretary, to the extent possible, shall utilize the same equivalency criteria as would be used in approving such changes under Section 3.3.1.a. of this permit. If a testing method is specified or approved which effectively replaces a test method specified in the permit, the permit may be revised in accordance with 45CSR§13-4. or 45CSR§13-5.4 as applicable.

c. All periodic tests to determine mass emission limits from or air pollutant concentrations in discharge stacks and such other tests as specified in this permit shall be conducted in accordance with an approved test protocol. Unless previously approved, such protocols shall be submitted to the Secretary in writing at least thirty (30) days prior to any testing and shall contain the information set forth by the Secretary. In addition, the permittee shall notify the Secretary at least fifteen (15) days prior to any testing so the Secretary may have the opportunity to observe such tests. This notification shall include the actual date and time during which the test will be conducted and, if appropriate, verification that the tests will fully conform to a referenced protocol previously approved by the Secretary.

d. The permittee shall submit a report of the results of the stack test within sixty (60) days of completion of the test. The test report shall provide the information necessary to document the objectives of the test and to determine whether proper procedures were used to accomplish these objectives. The report shall include the following: the certification described in paragraph 3.5.1.; a statement of compliance status, also signed by a responsible official; and, a summary of conditions which form the basis for the compliance status evaluation. The summary of conditions shall include the following:

1. The permit or rule evaluated, with the citation number and language;
2. The result of the test for each permit or rule condition; and,
3. A statement of compliance or noncompliance with each permit or rule condition.

[WV Code § 22-5-4(a)(14-15) and 45CSR13]

3.4. Recordkeeping Requirements

3.4.1. **Retention of records.** The permittee shall maintain records of all information (including monitoring data, support information, reports, and notifications) required by this permit recorded in a form suitable and readily available for expeditious inspection and review. Support information

DRAFT

includes all calibration and maintenance records and all original strip-chart recordings for continuous monitoring instrumentation. The files shall be maintained for at least five (5) years following the date of each occurrence, measurement, maintenance, corrective action, report, or record. At a minimum, the most recent two (2) years of data shall be maintained on site. The remaining three (3) years of data may be maintained off site, but must remain accessible within a reasonable time. Where appropriate, the permittee may maintain records electronically (on a computer, on computer floppy disks, CDs, DVDs, or magnetic tape disks), on microfilm, or on microfiche.

3.4.2. **Odors.** For the purposes of 45CSR4, the permittee shall maintain a record of all odor complaints received, any investigation performed in response to such a complaint, and any responsive action(s) taken.
[45CSR§4. *State Enforceable Only.*]

3.5. Reporting Requirements

3.5.1. **Responsible official.** Any application form, report, or compliance certification required by this permit to be submitted to the DAQ and/or USEPA shall contain a certification by the responsible official that states that, based on information and belief formed after reasonable inquiry, the statements and information in the document are true, accurate, and complete.

3.5.2. **Confidential information.** A permittee may request confidential treatment for the submission of reporting required by this permit pursuant to the limitations and procedures of W.Va. Code § 22-5-10 and 45CSR31.

3.5.3. **Correspondence.** All notices, requests, demands, submissions and other communications required or permitted to be made to the Secretary of DEP and/or USEPA shall be made in writing and shall be deemed to have been duly given when delivered by hand, or mailed first class with postage prepaid to the address(es) set forth below or to such other person or address as the Secretary of the Department of Environmental Protection may designate:

If to the DAQ:
Director
WVDEP
Division of Air Quality
601 57th Street
Charleston, WV 25304-2345

If to the US EPA:
Associate Director
Office of Air Enforcement and Compliance Assistance
(3AP20)
U.S. Environmental Protection Agency
Region III
1650 Arch Street
Philadelphia, PA 19103-2029

3.5.4. Operating Fee

3.5.4.1. In accordance with 45CSR22 – Air Quality Management Fee Program, the permittee shall not operate nor cause to operate the permitted facility or other associated facilities on the same or contiguous sites comprising the plant without first obtaining and having in current effect a Certificate to Operate (CTO). Such Certificate to Operate (CTO) shall be renewed annually, shall be maintained on the premises for which the certificate has been issued, and shall be made immediately available for inspection by the Secretary or his/her duly authorized representative.

DRAFT

3.5.4.2. In accordance with 45CSR22 – Air Quality Management Fee Program, enclosed with this permit is an Application for a Certificate to Operate (CTO). The CTO will cover the time period beginning with the date of initial startup through the following June 30. Said application and the appropriate fee shall be submitted to this office prior to the date of initial startup. For any startup date other than July 1, the permittee shall pay a fee or prorated fee in accordance with Section 4.5 of 45CSR22. A copy of this schedule may be found on the reverse side of the CTO application.

3.5.5. **Emission inventory.** At such time(s) as the Secretary may designate, the permittee herein shall prepare and submit an emission inventory for the previous year, addressing the emissions from the facility and/or process(es) authorized herein, in accordance with the emission inventory submittal requirements of the Division of Air Quality. After the initial submittal, the Secretary may, based upon the type and quantity of the pollutants emitted, establish a frequency other than on an annual basis.

DRAFT

4.0. Source-Specific Requirements

4.1. Limitations and Standards

4.1.1. **Record of Monitoring.** The permittee shall keep records of monitoring information that include the following:

a. The date, place as defined in this permit, and time of sampling or measurements;
b. The date(s) analyses were performed;
c. The company or entity that performed the analyses;
d. The analytical techniques or methods used;
e. The results of the analyses; and
f. The operating conditions existing at the time of sampling or measurement.

4.1.2. **Minor Source of Hazardous Air Pollutants (HAP).** HAP emissions from the facility shall be less than 10 tons/year of any single HAP or 25 tons/year of any combination of HAPs. Compliance with this Section shall ensure that the facility is a minor HAP source.

4.1.3. **Operation and Maintenance of Air Pollution Control Equipment.** The permittee shall, to the extent practicable, install, maintain, and operate all pollution control equipment listed in Section 1.0 and associated monitoring equipment in a manner consistent with safety and good air pollution control practices for minimizing emissions, or comply with any more stringent limits set forth in this permit or as set forth by any State rule, Federal regulation, or alternative control plan approved by the Secretary.
[45CSR§13-5.11.]

4.1.4. **Record of Malfunctions of Air Pollution Control Equipment.** For all air pollution control equipment listed in Section 1.0, the permittee shall maintain records of the occurrence and duration of any malfunction or operational shutdown of the air pollution control equipment during which excess emissions occur. For each such case, the following information shall be recorded:

a. The equipment involved.
b. Steps taken to minimize emissions during the event.
c. The duration of the event.
d. The estimated increase in emissions during the event.

For each such case associated with an equipment malfunction, the additional information shall also be recorded:

e. The cause of the malfunction.
f. Steps taken to correct the malfunction.
g. Any changes or modifications to equipment or procedures that would help prevent future recurrences of the malfunction.

4.1.5. The permittee shall install, maintain, and operate all above-ground piping, valves, pumps, etc. that service lines in the transport of potential sources of regulated air pollutants to minimize any fugitive escape of regulated air pollutants (leak). Any above-ground piping, valves, pumps, etc. that shows signs of excess wear and that have a reasonable potential for fugitive emissions of regulated air pollutants shall be repaired or replaced as needed.

DRAFT

4.1.6. The permittee shall monitor and maintain quarterly records (calendar year) for each facility component that was inspected for fugitive escape of regulated air pollutants. Each component shall operate with no detectable emissions, as determined using audio-visual-olfactory (AVO) inspections, USEPA 40CFR60 Method 21, USEPA alternative work practice to detect leaks from equipment using optical gas imaging (OGI) camera (ex. FLIR camera), or some combination thereof. AVO inspections shall include, but not limited to, defects as visible cracks, holes, or gaps in piping; loose connections; liquid leaks; or broken or missing caps or other closure devices. If permittee uses USEPA Method 21, then no detectable emissions is defined as less than 500 ppm in accordance with Method 21. If permittee uses an OGI camera, then no detectable emissions is defined as no visible leaks detected in accordance with USEPA alternative OGI work practices.

If any leak is detected, the permittee shall repair the leak as soon as possible. The first attempt at repair must be made within five (5) calendar days of discovering the leak, and the final repair must be made within fifteen (15) calendar days of discovering the leak. The permittee shall record each leak detected and the associated repair. The leak will not be considered repaired until the same monitoring method or a more detailed instrument determines the leak is repaired.

Delay of repair for which leaks or defects have been detected is allowed if the repair is technically infeasible without a shutdown, or if you determine that emissions resulting from immediate repair would be greater than the fugitive emissions likely to result from delay of repair. You must complete repair of such equipment by the end of the next shutdown.
[45CSR§13-5.11.]

4.1.7. The unpaved haulroads shall be operated in accordance with the following: The Frac Water Tank Trucks shall not exceed a weight of 40 tons with a maximum of 73,000 trips per year. Each round trip shall not exceed 940 feet. There are no controls.

DRAFT

5.0. Source-Specific Requirements [Storage Vessels (1E-39E)]

5.1. Limitations and Standards

5.1.1. *Emission Units.* The maximum design capacity for each of the storage vessels shall not exceed the following:

Emission Point ID#	Description	Design Capacity (gal)
1E-16E	16 Influent Tanks	21,000 each
17E-18E	2 Weir Tanks	21,000 each
19E-23E	5 Settling Tanks	21,000 each
24E-35E	12 Effluent Tanks	21,000 each
36E-37E	2 Sludge Influent Tanks	21,000 each
38E	Filtrate Water Tank	21,000
39E	Brine Mixing Tank	3,780

5.1.2. *Maximum Storage Vessel Throughput Limitation.* The permittee shall not exceed the following storage vessel throughputs:

Emission Point ID#	Description	Maximum Daily Throughput (gal)
1E-16E	16 Influent Tanks	26,250 each
17E-18E	2 Weir Tanks	420,000 each
19E-23E	5 Settling Tanks	420,000 each
24E-35E	12 Effluent Tanks	35,000 each
36E-37E	2 Sludge Influent Tanks	41,286 each
38E	Filtrate Water Tank	24,772
39E	Brine Mixing Tank	1,000

5.1.3. *Cover Requirements.* The permittee shall comply with the cover requirements in this section.

1. The cover and all openings on the cover (e.g., access hatches, sampling ports, pressure relief valves and gauge wells) shall form a continuous impermeable barrier over the entire surface area of the liquid in the storage vessel.

2. Each cover opening shall be secured in a closed, sealed position (e.g., covered by a gasketed lid or cap) whenever material is in the unit on which the cover is installed except during those times when it is necessary to use an opening as follows:

   (i) To add material to, or remove material from the unit (this includes openings necessary to equalize or balance the internal pressure of the unit following changes in the level of the material in the unit);

   (ii) To inspect or sample the material in the unit;

   (iii) To inspect, maintain, repair, or replace equipment located inside the unit; or

   (iv) To vent liquids, gases, or fumes from the unit through a closed-vent system designed and operated in accordance with the requirements of this permit to a control device or to a process.

3. Each storage vessel thief hatch shall be weighted and properly seated. You must select gasket material for the hatch based on composition of the fluid in the storage vessel and weather conditions.

[45CSR§13-5.11.]

5.1.4. *Regulated Pollutant Limitation.* The permittee shall not exceed the following emission limits for the storage vessels:

Emission Point ID#	Source	VOC	
		lb/hr	ton/year
1E-16E	16 Influent Tanks	0.50	2.19
17E-18E	2 Weir Tanks	0.66	2.89
19E-23E	5 Settling Tanks	1.65	7.23
24E-35E	12 Effluent Tanks	0.44	1.97
36E-37E	2 Sludge Influent Tanks	0.09	0.37
38E	Filtrate Water Tank	0.03	0.13
39E	Brine Mixing Tank	0.00	0.01

5.1.5. The inlet piping system must include a sample port to enable sampling of influent.

5.2. Recordkeeping Requirements

5.2.1. To demonstrate compliance with section 5.1.2 of this permit, the permittee shall maintain a record of the aggregate throughput for each storage vessel on a calendar day basis. Said records shall be maintained in accordance with section 3.4.1 of this permit.

5.2.2. To demonstrate compliance with section 5.1.4 of this permit, the permittee shall maintain records of the determination of the VOC emission rate per storage vessel, including identification of the model or calculation methodology used to calculate the VOC emission rate. Said records shall be maintained in accordance with sections 3.4.1 and 5.3.1 of this permit.

5.2.3. All records required under Section 5.2 shall be maintained on site or in a readily accessible off-site location maintained by the permittee for a period of five (5) years. Said records shall be readily available to the Director of the DAQ or his/her duly authorized representative for expeditious inspection and review. Any records submitted to the agency pursuant to a requirement of this permit or upon request by the Director shall be certified by a responsible official.

5.3. Testing Requirements

5.3.1. Influent material shall be sampled at an initial frequency of once per every 50,000 barrels received. After three (3) months of operation, if the sample results result in the VOC emission determination required in section 5.2.2 of this permit being less than 50% of the emission limits in section 5.1.4 of this permit, the sampling frequency can be lowered to once every 200,000 barrels. Said records shall be maintained in accordance with section 3.4.1 of this permit.

5.3.2. The sample shall be analyzed for VOC per method 8260.

5.4. Notification and Reporting Requirements

5.4.1. The permittee shall notify the Director of the DAQ in writing for any instance when the potential emissions determined under section 5.3.1 of this permit were greater than the potential emissions in section 5.1.4 of this permit. The notification to the Director shall be provided no later than 30 days from the date of discovery of the increased emissions.

DRAFT

6.0. Source-Specific Requirements [Loading (40E-42E)]

6.1. Limitations and Standards

6.1.1. *Maximum Truck Loading Throughput Limitation.* The permittee shall not exceed the following maximum throughput limits.

Emission Point ID#	Loading Operation	Maximum Daily Throughput (gal/day)
40E	Water Load in	420.000
41E	Sludge Load out	29,400
42E	Water Load out	420,000

6.1.2. The loading (40E-42E) shall be submerged loading, dedicated service, and shall be operated in accordance with the following:

Emission Point ID#	Liquid Bulk Temp (R)	Molecular Weight (lb/lb-mol)	Pressure @ Liquid Bulk Temp (psia)
40E	517.22	22	0.2864
41E	517.22	22	0.2864
42E	517.22	22	0.2864

6.2. Recordkeeping Requirements

6.2.1. For the purpose of demonstrating compliance with section 6.1.1, the permittee shall maintain records of the volumes of water and sludge loaded on a calendar day basis.

6.2.2. All records required under Section 6.2 shall be maintained on site or in a readily accessible off-site location maintained by the permittee for a period of five (5) years. Said records shall be readily available to the Director of the Division of Air Quality or his/her duly authorized representative for expeditious inspection and review. Any records submitted to the agency pursuant to a requirement of this permit or upon request by the Director shall be certified by a responsible official.

DRAFT

CERTIFICATION OF DATA ACCURACY

I, the undersigned, hereby certify that, based on information and belief formed after reasonable inquiry, all information contained in the attached _____, representing the period beginning _____ and ending _____, and any supporting documents appended hereto, is true, accurate, and complete.

Signature[1] (please use blue ink) _____ Responsible Official or Authorized Representative _____ Date

Name & Title (please print or type) _____ Name _____ Title

Telephone No. _____ Fax No. _____

[1] This form shall be signed by a "Responsible Official". "Responsible Official" means one of the following:

a. For a corporation: The president, secretary, treasurer, or vice-president of the corporation in charge of a principal business function, or any other person who performs similar policy or decision-making functions for the corporation, or a duly authorized representative of such person if the representative is responsible for the overall operation of one or more manufacturing, production, or operating facilities applying for or subject to a permit and either:

(i) the facilities employ more than 250 persons or have a gross annual sales or expenditures exceeding $25 million (in second quarter 1980 dollars), or

(ii) the delegation of authority to such representative is approved in advance by the Director;

b. For a partnership or sole proprietorship: a general partner or the proprietor, respectively;

c. For a municipality, State, Federal, or other public entity: either a principal executive officer or ranking elected official. For the purposes of this part, a principal executive officer of a Federal agency includes the chief executive officer having responsibility for the overall operations of a principal geographic unit of the agency (e.g., a Regional Administrator of U.S. EPA); or

d. The designated representative delegated with such authority and approved in advance by the Director.

DRAFT

Permit / Application Information Sheet
Division of Environmental Protection
West Virginia Office of Air Quality

Company:	HEP SHALEWATER SOLUTIONS, LLC			**Facility:**	Central Station
Region:	8	**Plant ID:**	017-00160	**Application #:**	13-3317
Engineer:	Williams, Jerry			**Category:**	
Physical Address:	County Rd 11 West Union WV			SIC: [1382] OIL AND GAS EXTRACTION - OIL AND GAS EXPLORATION SERVICE NAICS: [213112] Support Activities for Oil and Gas Operations	
County:	Doddridge				
Other Parties:	PRES - Gutta, Tony 304-592-2794 ENV_CONT - Hall, Ryan 855-303-9416				

Information Needed for Database and AIRS
1. Need valid physical West Virginia address with zip
2. Air Program
3. Inspection result
4. Pollutant and class

Regulated Pollutants

Summary from this Permit 13-3317

Air Programs		Applicable Regulations
Fee Program	**Fee**	**Application Type**
	$1,000.00	CONSTRUCTION

Notes from Database

Activity Dates

APPLICATION RECIEVED	05/06/2016
APPLICATION FEE PAID	05/06/2016
ASSIGNED DATE	05/06/2016

NON-CONFIDENTIAL

Please note, this information sheet is not a substitute for file research and is limited to data entered into the AIRTRAX database.

Company ID: 017-00160
Company: HEP SHALEWATER SOLUTIONS, LLC
Printed: 05/06/2016
Engineer: Williams, Jerry

Williams, Jerry

From:	Williams, Jerry
Sent:	Wednesday, June 15, 2016 1:53 PM
To:	Tony Gutta (tgutta@shalewater.com); Ryan Hall; Joyce Gentry (Joyce.gentry@sj-environmental.com)
Cc:	McKeone, Beverly D
Subject:	WV DAQ NSR Permit Application Complete for HEP Shalewater Solutions, LLC - Central Station

RE: Application Status: Complete
HEP Shalewater Solutions, LLC - Central Station
Permit Application R13-3317
Plant ID No. 017-00160

Mr. Gutta,

Your application for a construction permit for an oil and gas water treatment facility was received by this Division on May 6, 2017 and assigned to the writer for review. Upon review of said application, it was determined that the application was incomplete and additional information was requested on May 17, 18, 26, and 27, 2016. The requested information has been fully received, therefore, the statutory review period commenced on June 15, 2016.

In the case of this application, the agency believes it will take approximately 90 days to make a final permit determination.

This determination of completeness shall not relieve the permit applicant of the requirement to subsequently submit, in a timely manner, any additional or corrected information deemed necessary for a final permit determination.

Should you have any questions, please contact Jerry Williams at (304) 926-0499 ext. 1223 or reply to this email.

Jerry Williams, P.E.
Engineer
WVDEP – Division of Air Quality
601 57th Street, SE
Charleston, WV 25304
(304) 926-0499 ext. 1223
jerry.williams@wv.gov

dep

NON-CONFIDENTIAL

Please consider the environment before printing this email.

Williams, Jerry

From: Joyce Gentry <Joyce.gentry@sj-environmental.com>
Sent: Friday, June 10, 2016 2:28 PM
To: Williams, Jerry
Cc: Tony Gutta (tgutta@shalewater.com); Ryan Hall
Subject: HEP Shalewater
Attachments: HEP Shalewater application - Untitled Extract Pages.pdf

Jerry please find attached the TANK4.09d print out with the 0.2864 value for psia used in the loading/unloading loss equations.

Joyce Gentry
Senior Environmental Consultant
Steptoe & Johnson PLLC
P.O. Box 1588, Charleston, WV 25326-1588
Overnight
Chase Tower, 17th Floor
707 Virginia Street, East, Charleston, WV 25301
O: 304-556-8215 F: 304-353-8180 C: 304-541-6315

joyce.gentry@steptoe-johnson.com
www.steptoe-johnson.com

Steptoe & Johnson PLLC Note:
This e-mail and any attachments are confidential and may be protected by legal privilege. If you are not the intended recipient, be aware that any disclosure, copying, distribution or use of this e-mail or any attachment is prohibited. If you have received this e-mail in error, please notify us immediately by returning it to the sender and delete this copy from your system. Thank you for your cooperation.

ID # 017-00160
Reg R13-3317
Company HEP SHALEWATER
Facility CENTRAL Initials JW

NON-CONFIDENTIAL

TANKS 4.0.9d
Emissions Report - Detail Format
Liquid Contents of Storage Tank

ET 1-12 - Horizontal Tank
, West Virginia

Mixture/Component	Month	Daily Liquid Surf. Temperature (deg F) Avg.	Min.	Max.	Liquid Bulk Temp (deg F)	Vapor Pressure (psia) Avg.	Min.	Max.	Vapor Mol. Weight.	Liquid Mass Fract.	Vapor Mass Fract.	Mol. Weight	Basis for Vapor Pressure Calculations
100,000ppm VOC (10%) HEP Shalewater	Jan	48.84	43.20	54.48	57.22	0.2160	0.1781	0.2611	31.6820			21.94	
Benzene						0.8499	0.7189	1.0001	78.1100	0.0025	0.0068	78.11	Option 2: A=6.905, B=1211.033, C=220.79
Ethylbenzene						0.0728	0.0590	0.0893	106.1700	0.0025	0.0006	106.17	Option 2: A=6.975, B=1424.255, C=213.21
Gasoline (RVP 6)						2.3151	2.0453	2.6133	69.0000	0.0900	0.5010	92.00	Option 4: RVP=6, ASTM Slope=3
Toluene						0.2310	0.1914	0.2774	92.1300	0.0025	0.0019	92.13	Option 2: A=6.954, B=1344.8, C=219.48
Water						0.1696	0.1368	0.2090	20.2300	0.9000	0.4893	20.23	Option 2: A=8.07131, B=1730.63, C=233.426
Xylenes (mixed isomers)						0.0604	0.0488	0.0742	106.1700	0.0025	0.0005	106.17	Option 2: A=7.009, B=1462.266, C=215.11
100,000ppm VOC (10%) HEP Shalewater	Feb	51.29	44.55	58.03	57.22	0.2347	0.1866	0.2937	31.3509			21.94	
Benzene						0.9127	0.7487	1.1056	78.1100	0.0025	0.0068	78.11	Option 2: A=6.905, B=1211.033, C=220.79
Ethylbenzene						0.0796	0.0621	0.1013	106.1700	0.0025	0.0006	106.17	Option 2: A=6.975, B=1424.255, C=213.21
Gasoline (RVP 6)						2.4411	2.1076	2.8166	69.0000	0.0900	0.4914	92.00	Option 4: RVP=6, ASTM Slope=3
Toluene						0.2503	0.2004	0.3104	92.1300	0.0025	0.0019	92.13	Option 2: A=6.954, B=1344.8, C=219.48
Water						0.1858	0.1441	0.2378	20.2300	0.9000	0.4988	20.23	Option 2: A=8.07131, B=1730.63, C=233.426
Xylenes (mixed isomers)						0.0661	0.0514	0.0843	106.1700	0.0025	0.0005	106.17	Option 2: A=7.009, B=1462.266, C=215.11
100,000ppm VOC (10%) HEP Shalewater	Mar	57.27	48.89	65.86	57.22	0.2864	0.2164	0.3762	30.5895			21.94	
Benzene						1.0823	0.8511	1.3634	78.1100	0.0025	0.0068	78.11	Option 2: A=6.905, B=1211.033, C=220.79
Ethylbenzene						0.0986	0.0729	0.1318	106.1700	0.0025	0.0006	106.17	Option 2: A=6.975, B=1424.255, C=213.21
Gasoline (RVP 6)						2.7720	2.3176	3.2966	69.0000	0.0900	0.4686	92.00	Option 4: RVP=6, ASTM Slope=3
Toluene						0.3031	0.2314	0.3928	92.1300	0.0025	0.0019	92.13	Option 2: A=6.954, B=1344.8, C=219.48
Water						0.2314	0.1699	0.3115	20.2300	0.9000	0.5215	20.23	Option 2: A=8.07131, B=1730.63, C=233.426
Xylenes (mixed isomers)						0.0821	0.0605	0.1100	106.1700	0.0025	0.0005	106.17	Option 2: A=7.009, B=1462.266, C=215.11
100,000ppm VOC (10%) HEP Shalewater	Apr	62.62	52.57	72.66	57.22	0.3411	0.2450	0.4698	29.9611			21.94	
Benzene						1.2553	0.9470	1.6425	78.1100	0.0025	0.0067	78.11	Option 2: A=6.905, B=1211.033, C=220.79
Ethylbenzene						0.1188	0.0834	0.1665	106.1700	0.0025	0.0006	106.17	Option 2: A=6.975, B=1424.255, C=213.21
Gasoline (RVP 6)						3.0979	2.5091	3.7946	69.0000	0.0900	0.4490	92.00	Option 4: RVP=6, ASTM Slope=3
Toluene						0.3580	0.2609	0.4842	92.1300	0.0025	0.0019	92.13	Option 2: A=6.954, B=1344.8, C=219.48
Water						0.2801	0.1949	0.3962	20.2300	0.9000	0.5412	20.23	Option 2: A=8.07131, B=1730.63, C=233.426
Xylenes (mixed isomers)						0.0990	0.0693	0.1392	106.1700	0.0025	0.0005	106.17	Option 2: A=7.009, B=1462.266, C=215.11
100,000ppm VOC (10%) HEP Shalewater	May	67.58	56.53	78.63	57.22	0.4001	0.2795	0.5653	29.4188			21.94	
Benzene						1.4358	1.0599	1.9158	78.1100	0.0025	0.0067	78.11	Option 2: A=6.905, B=1211.033, C=220.79
Ethylbenzene						0.1406	0.0961	0.2018	106.1700	0.0025	0.0007	106.17	Option 2: A=6.975, B=1424.255, C=213.21
Gasoline (RVP 6)						3.4276	2.7290	4.2650	69.0000	0.0900	0.4314	92.00	Option 4: RVP=6, ASTM Slope=3
Toluene						0.4163	0.2961	0.5755	92.1300	0.0025	0.0019	92.13	Option 2: A=6.954, B=1344.8, C=219.48
Water						0.3330	0.2252	0.4833	20.2300	0.9000	0.5588	20.23	Option 2: A=8.07131, B=1730.63, C=233.426
Xylenes (mixed isomers)						0.1174	0.0799	0.1691	106.1700	0.0025	0.0005	106.17	Option 2: A=7.009, B=1462.266, C=215.11
100,000ppm VOC (10%) HEP Shalewater	Jun	71.63	60.22	83.05	57.22	0.4548	0.3155	0.6468	29.0030			21.94	
Benzene						1.5988	1.1749	2.1416	78.1100	0.0025	0.0066	78.11	Option 2: A=6.905, B=1211.033, C=220.79
Ethylbenzene						0.1609	0.1094	0.2321	106.1700	0.0025	0.0007	106.17	Option 2: A=6.975, B=1424.255, C=213.21
Gasoline (RVP 6)						3.7178	2.9479	4.6432	69.0000	0.0900	0.4174	92.00	Option 4: RVP=6, ASTM Slope=3
Toluene						0.4697	0.3324	0.6521	92.1300	0.0025	0.0020	92.13	Option 2: A=6.954, B=1344.8, C=219.48
Water						0.3826	0.2572	0.5583	20.2300	0.9000	0.5727	20.23	Option 2: A=8.07131, B=1730.63, C=233.426
Xylenes (mixed isomers)						0.1345	0.0911	0.1947	106.1700	0.0025	0.0006	106.17	Option 2: A=7.009, B=1462.266, C=215.11
100,000ppm VOC (10%) HEP Shalewater	Jul	72.90	62.13	83.68	57.22	0.4733	0.3357	0.6593	28.8776			21.94	
Benzene						1.6529	1.2384	2.1756	78.1100	0.0025	0.0066	78.11	Option 2: A=6.905, B=1211.033, C=220.79

Williams, Jerry

From: Joyce Gentry <Joyce.gentry@sj-environmental.com>
Sent: Thursday, June 09, 2016 1:19 PM
To: Williams, Jerry; Tony Gutta (tgutta@shalewater.com); Ryan Hall
Cc: McKeone, Beverly D
Subject: RE: WV DAQ Permit Application Incomplete for HEP Shalewater Solutions, LLC - Central Station Facility
Attachments: Sludge emissions.docx; Attachment L-2 -2240_General_Sludge Loadout.pdf; Attachment L-1_Storage Tanks_DT1-4.pdf; Attachment L-2 - 3970_Bulk Liquid Transfer Operations_Water Loading 6-6-16.pdf; Attachment L-3 - 3970_Bulk Liquid Transfer Operations_Water Loadin 6-6-16.pdf; Attachment G - Process Description _ 6-6-16.pdf; Attachment F - Process Flow Diagram.pdf; Attachment J-EmissionPointsDataSummarySheet.pdf; Attachment N - Emission Summary_Shalewater 100000ppm_10000bbl_6-6-16.pdf; Attachment Ls - Remaining Tanks.pdf; Attachment - TANKS Results.pdf; Attachment I - Emission Units.pdf

---

From: Williams, Jerry [mailto:Jerry.Williams@wv.gov]
Sent: Thursday, June 09, 2016 10:53 AM
To: Joyce Gentry; Tony Gutta (tgutta@shalewater.com); Ryan Hall
Cc: McKeone, Beverly D
Subject: RE: WV DAQ Permit Application Incomplete for HEP Shalewater Solutions, LLC - Central Station Facility

Joyce,

Please provide a detailed explanation how these documents address each incomplete item. Please be specific and indicate which document addresses each incomplete item. There are too many documents for me to try and make a conclusion on how each item should be addressed.

Thanks,
Jerry

From: Joyce Gentry [mailto:Joyce.gentry@sj-environmental.com]
Sent: Thursday, June 09, 2016 10:45 AM
To: Williams, Jerry <Jerry.Williams@wv.gov>; Tony Gutta (tgutta@shalewater.com) <tgutta@shalewater.com>; Ryan Hall <rhall@shalewater.com>
Cc: McKeone, Beverly D <Beverly.D.Mckeone@wv.gov>
Subject: RE: WV DAQ Permit Application Incomplete for HEP Shalewater Solutions, LLC - Central Station Facility

Please find the information provided by Hull and HEP Shalewater.

If you should have any questions, please feel free to contact me.

ID # 017-00160
Reg R13-3317
Company HEP SHALEWATER
Facility CENTRAL Initials JW

Joyce Gentry
Senior Environmental Consultant
Steptoe & Johnson PLLC
P.O. Box 1588, Charleston, WV 25326-1588
Overnight
Chase Tower, 17th Floor

NON-CONFIDENTIAL

707 Virginia Street, East, Charleston, WV 25301
O: 304-556-8215 F: 304-353-8180 C: 304-541-6315

joyce.gentry@steptoe-johnson.com
www.steptoe-johnson.com

STEPTOE & JOHNSON
ATTORNEYS AT LAW

From: Williams, Jerry [mailto:Jerry.Williams@wv.gov]
Sent: Friday, May 27, 2016 1:26 PM
To: Tony Gutta (tgutta@shalewater.com); Ryan Hall; Joyce Gentry
Cc: McKeone, Beverly D
Subject: WV DAQ Permit Application Incomplete for HEP Shalewater Solutions, LLC - Central Station Facility

RE: Application Status: Incomplete
HEP Shalewater Solutions, LLC - Central Station Facility
Permit Application No. R13-3317
Plant ID No. 017-00160

Mr. Gutta,

Your application for a construction permit for an oil and gas water treatment facility was received by this Division on May 6, 2016 and assigned to the writer for review. Upon initial review of said application, it was determined that the application as submitted was incomplete. On May 17, 2016, I attempted to contact Ryan Hall (phone was disconnected), but was able to speak to Joyce Gentry (Steptoe & Johnson) about application deficiencies. Joyce and I met on May 18, 2016 at the DEP headquarters to discuss these issues. Yesterday (May 26, 2016), I received an email from Joyce which included additional information prepared by Hillstone and Hull. I reviewed the information included with the email and believe that a lot of the issues I brought up in the May 18, 2016 were not adequately addressed. Therefore, this permit application is still incomplete based on the following items:

1. The original application indicated the molecular weight of the liquids treated at this facility would be 22 lb/lb-mol. This is representative of the liquids the DAQ has encountered in this area. The liquids being treated at this facility could include produced water, flow back water or contaminated surface water. Therefore, a molecular weight of 22 lb/lb-mol is an acceptable number. The original application included loading emission calculations that utilized this number, but all of the tank calculations were performed with a molecular weight of 19.59 lb/lb-mol. This would not be representative of all samples received at this facility. Yesterday's (5/26) submittal changed the molecular weight of the liquids loading to 19.5 lb/lb-mol to match a calculated molecular weight used in TANKS 4.09 that was not supported with laboratory analysis of an actual sample. The DAQ has stated on several occasions that this number is not representative of produced water samples from that area and is unacceptable for use in performing these calculations.

The molecular weight for the Loading and Unloading losses has been changed to 22. See the Attachment N – Supporting Calculations

2. All of the TANKS 4.09d runs used the same fluid mixture. This includes the 16 influent storage tanks, 2 weir tanks, 5 settling tanks, 12 effluent tanks, 2 sludge effluent tanks, 1 filtrate water tank, and 1 brine mixing tank. Please provide a laboratory analysis that would support that each of these tanks which are in different parts of the treatment process would all contain the same fluid mixture. It is still not clear whether or not the fluid composition changes throughout the process.

TANKS4.09d runs have been re-run with a molecular weight of 21.94. See Attachment – TANKS Results.pdf

3. The original application included MSDS for sodium hydroxide, Shale Bind, Shaleclear Marcellus, and Shale Floc. I asked how these would be stored and should be listed on Attachment I, Emission Unit Table. All storage tanks must be identified.

The storage tanks were identified on Attachment I – Emission Units.pdf and the Attachment F - Process Flow Diagram.pdf

4. There are two (2) locations for water loading emissions. This would be the influent water and the effluent water. However, only one (1) emission point for water loading was provided. Please provide both the influent and effluent loading using the appropriate parameters for each.

Both water loading and unloading are now in two separate emission points. See Attachment N- Emissions Summary Shalewater 100000 ppm 100000bbl 6-6-16.pdf

5. The application and yesterday's submittal indicates there will be dewatered sludge. As requested before, please include any storage and transfer point emissions associated with this dewatered product.

See Sludge Emissions.doc

Please address the above deficiencies in writing within fifteen (15) days of the receipt of this email. Application review will not commence until the application has been deemed to be technically complete. Failure to respond to this request in a timely manner may result in the denial of the application.

Should you have any questions, please contact Jerry Williams at (304) 926-0499 ext. 1223 or reply to this email.

Thanks,
Jerry

Jerry Williams, P.E.
Engineer
WVDEP – Division of Air Quality
601 57th Street, SE
Charleston, WV 25304
(304) 926-0499 ext. 1223
jerry.williams@wv.gov

dep

Please consider the environment before printing this email.

Steptoe & Johnson PLLC Note:
This e-mail and any attachments are confidential and may be protected by legal privilege. If you are not the intended recipient, be aware that any disclosure, copying, distribution or use of this e-mail or any attachment is prohibited. If you have received this e-mail in error, please notify us immediately by returning it to the sender and delete this copy from your system. Thank you for your cooperation.

Steptoe & Johnson PLLC Note:
This e-mail and any attachments are confidential and may be protected by legal privilege. If you are not the intended recipient, be aware that any disclosure, copying, distribution or use of this e-mail or any attachment is prohibited. If you have received this e-mail in error, please notify us immediately by returning it to the sender and delete this copy from your system. Thank you for your cooperation.

HILLSTONE ENVIRONMENTAL

Date	Central Station Application	Reported To
06/02/2016	Dewatered Sludge Information	Jerry Williams

Dear Mr. Williams,

Please accept this correspondence as it relates to our potential sludge emissions in response to your email dated Friday May 27th, 2016. In the email you requested additional information about storage and transfer point emissions associated with our dewatered product.

On page 162 of our permit application we calculated that there may be 2.01lb/day or 0.37 ton/year total emissions from the Sludge Loadout process. The material, our process and the way that it is handled does not result in any storage or transport emissions of particulate matter. AP42 states that there are three main factors affecting dust emissions resulting from storage piles; age, moisture content and proportion of aggregate fines. In addition they assume that fill materials in a municipal waste landfill has a mean silt content of 12% and mean moisture content of 11% respectively.

Our cake does not age on site beyond a few days. It is kept in the wet form (approx. moisture content of 85%) until it is put through the press. A typical cake drop is approximately four tons and we generally get three drops per roll off box. The press is enclosed and the roll off boxes are covered when not in use. Our cake has a significantly higher moisture content than what is assumed by AP42. We expect our cake to retain between 40% to 20% moisture content. Image one below from a recent round of testing documents a moisture content of 27.5%. While the removed TSS in the influent was originally colloidal in size the addition of both polymer and a sludge conditioning agents produce a well formed cake that is resistant to disaggregation.

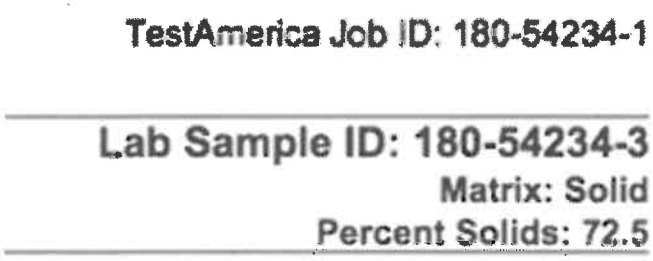

Figure 1. Analytical results illustrating percent solids of Hillstone filtercake.

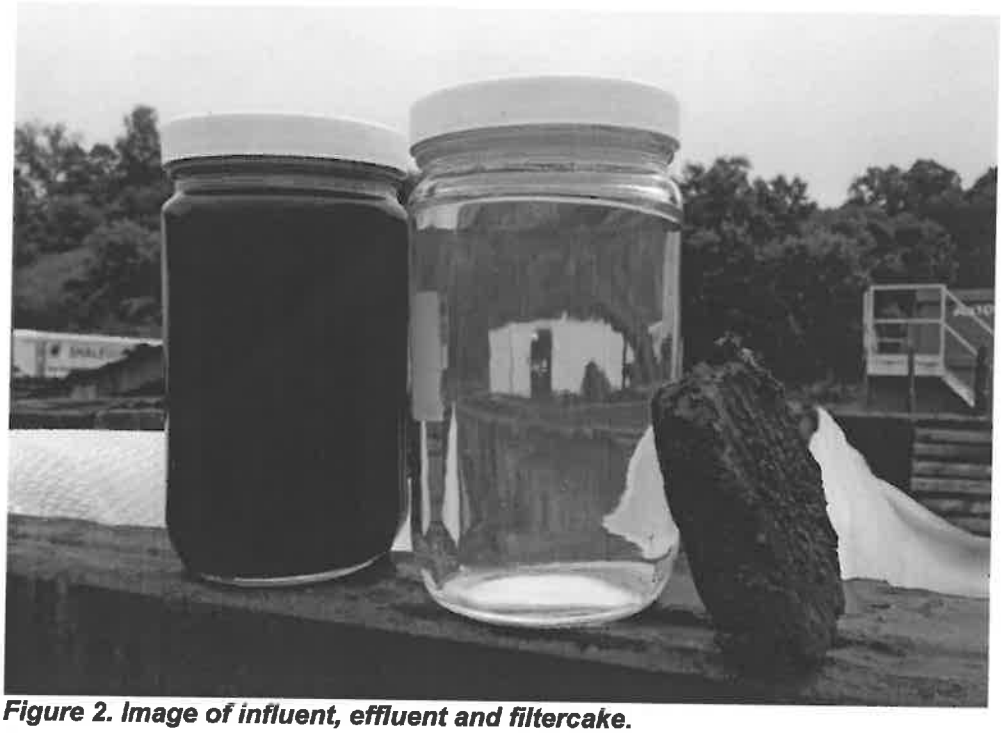

Figure 2. Image of influent, effluent and filtercake.

In addition Hillstone does not engage in any of the source activities that are a part of the storage cycle such as; loading of aggregate onto storage piles, equipment traffic in storage areas, wind erosion of pile surfaces and ground areas or loadout of aggregate for shipment. Our material is moved via conveyor while still wet into a roll of box that is covered when not in use. Once full the box is taken off site via winch truck.

Please contact me at (724) 289-7475 if you have any concerns or questions about the information in this report.

Sincerely,

Ryan Hall
Technical Director
Hillstone Environmental

Attachment L
EMISSIONS UNIT DATA SHEET
GENERAL

To be used for affected sources other than asphalt plants, foundries, incinerators, indirect heat exchangers, and quarries.

Identification Number (as assigned on *Equipment List Form*): SL-1

1. Name or type and model of proposed affected source: Dewatered Sludge Disposal - Some emissions will volitilize before leaving the facility.
2. On a separate sheet(s), furnish a sketch(es) of this affected source. If a modification is to be made to this source, clearly indicated the change(s). Provide a narrative description of all features of the affected source which may affect the production of air pollutants.
3. Name(s) and maximum amount of proposed process material(s) charged per hour:
4. Name(s) and maximum amount of proposed material(s) produced per hour: Dewatered Sludge - 29lb of sludge produced per hour
5. Give chemical reactions, if applicable, that will be involved in the generation of air pollutants: None

* The identification number which appears here must correspond to the air pollution control device identification number appearing on the *List Form*.

6. Combustion Data (if applicable):

(a) Type and amount in appropriate units of fuel(s) to be burned:

(b) Chemical analysis of proposed fuel(s), excluding coal, including maximum percent sulfur and ash:

(c) Theoretical combustion air requirement (ACF/unit of fuel):

@ °F and psia.

(d) Percent excess air:

(e) Type and BTU/hr of burners and all other firing equipment planned to be used:

(f) If coal is proposed as a source of fuel, identify supplier and seams and give sizing of the coal as it will be fired:

(g) Proposed maximum design heat input: × 10^6 BTU/hr.

7. Projected operating schedule:

Hours/Day	24	Days/Week	7	Weeks/Year	52

8. Projected amount of pollutants that would be emitted from this affected source if no control devices were used:

@ 40-80 °F and atmospheric psia

a.	NO_X		lb/hr	grains/ACF
b.	SO_2		lb/hr	grains/ACF
c.	CO		lb/hr	grains/ACF
d.	PM_{10}		lb/hr	grains/ACF
e.	Hydrocarbons		lb/hr	grains/ACF
f.	VOCs	0.06	lb/hr	grains/ACF
g.	Pb		lb/hr	grains/ACF
h.	Specify other(s)			
	Total HAPs	<0.01	lb/hr	grains/ACF
			lb/hr	grains/ACF
			lb/hr	grains/ACF
			lb/hr	grains/ACF

NOTE: (1) An Air Pollution Control Device Sheet must be completed for any air pollution device(s) used to control emissions from this affected source.

(2) Complete the Emission Points Data Sheet.

9. Proposed Monitoring, Recordkeeping, Reporting, and Testing
Please propose monitoring, recordkeeping, and reporting in order to demonstrate compliance with the proposed operating parameters. Please propose testing in order to demonstrate compliance with the proposed emissions limits.

MONITORING	RECORDKEEPING
See Attachment O	See Attachment O
REPORTING	TESTING
See Attachment O	See Attachment O

MONITORING. PLEASE LIST AND DESCRIBE THE PROCESS PARAMETERS AND RANGES THAT ARE PROPOSED TO BE MONITORED IN ORDER TO DEMONSTRATE COMPLIANCE WITH THE OPERATION OF THIS PROCESS EQUIPMENT OPERATION/AIR POLLUTION CONTROL DEVICE.

RECORDKEEPING. PLEASE DESCRIBE THE PROPOSED RECORDKEEPING THAT WILL ACCOMPANY THE MONITORING.

REPORTING. PLEASE DESCRIBE THE PROPOSED FREQUENCY OF REPORTING OF THE RECORDKEEPING.

TESTING. PLEASE DESCRIBE ANY PROPOSED EMISSIONS TESTING FOR THIS PROCESS EQUIPMENT/AIR POLLUTION CONTROL DEVICE.

10. Describe all operating ranges and maintenance procedures required by Manufacturer to maintain warranty
NONE

Attachment L
EMISSIONS UNIT DATA SHEET
STORAGE TANKS

Provide the following information for each new or modified bulk liquid storage tank as shown on the *Equipment List Form* and other parts of this application. A tank is considered modified if the material to be stored in the tank is different from the existing stored liquid.

IF USING US EPA'S TANKS EMISSION ESTIMATION PROGRAM (AVAILABLE AT **www.epa.gov/tnn/tanks.html**), APPLICANT MAY ATTACH THE SUMMARY SHEETS IN LIEU OF COMPLETING SECTIONS III, IV, & V OF THIS FORM. HOWEVER, SECTIONS I, II, AND VI OF THIS FORM MUST BE COMPLETED. US EPA'S AP-42, SECTION 7.1, "ORGANIC LIQUID STORAGE TANKS," MAY ALSO BE USED TO ESTIMATE VOC AND HAP EMISSIONS (**http://www.epa.gov/tnn/chief/**).

I. GENERAL INFORMATION (required)

1. Bulk Storage Area Name N/A	2. Tank Name Chemical Storage Day Tanks #1-4
3. Tank Equipment Identification No. (as assigned on *Equipment List Form*) DT1-4	4. Emission Point Identification No. (as assigned on *Equipment List Form*) 43E-46E
5. Date of Commencement of Construction (for existing tanks) N/A	
6. Type of change ☒ New Construction ☐ New Stored Material ☐ Other Tank Modification	
7. Description of Tank Modification (if applicable) N/A	
7A. Does the tank have more than one mode of operation? (e.g. Is there more than one product stored in the tank?) ☐ Yes ☒ No	
7B. If YES, explain and identify which mode is covered by this application (Note: A separate form must be completed for each mode).	
7C. Provide any limitations on source operation affecting emissions, any work practice standards (e.g. production variation, etc.): None	

II. TANK INFORMATION (required)

8. Design Capacity (specify barrels or gallons). Use the internal cross-sectional area multiplied by internal height. 300 gallons	
9A. Tank Internal Diameter (ft) 3ft	9B. Tank Internal Height (or Length) (ft) Length: 5.5ft
10A. Maximum Liquid Height (ft) ~2.75	10B. Average Liquid Height (ft) ~2.5
11A. Maximum Vapor Space Height (ft) ~0.25	11B. Average Vapor Space Height (ft) ~0.5
12. Nominal Capacity (specify barrels or gallons). This is also known as "working volume" and considers design liquid levels and overflow valve heights. ~250 gallons	

13A. Maximum annual throughput (gal/yr) N/A	13B. Maximum daily throughput (gal/day) N/A
14. Number of Turnovers per year (annual net throughput/maximum tank liquid volume) N/A	
15. Maximum tank fill rate (gal/min) N/A	
16. Tank fill method ☐ Submerged ☐ Splash ☒ Bottom Loading	
17. Complete 17A and 17B for Variable Vapor Space Tank Systems ☒ Does Not Apply	
17A. Volume Expansion Capacity of System (gal)	17B. Number of transfers into system per year

18. Type of tank (check all that apply):
- ☒ Fixed Roof ___ vertical _X_ horizontal __ flat roof ___ cone roof ___ dome roof ___ other (describe)
- ☐ External Floating Roof ___ pontoon roof ___ double deck roof
- ☐ Domed External (or Covered) Floating Roof
- ☐ Internal Floating Roof ___ vertical column support ___ self-supporting
- ☐ Variable Vapor Space ___ lifter roof ___ diaphragm
- ☐ Pressurized ___ spherical ___ cylindrical
- ☐ Underground
- ☐ Other (describe) Horizontal Open-Top Mixing Tank.

III. TANK CONSTRUCTION & OPERATION INFORMATION (optional if providing TANKS Summary Sheets)

19. Tank Shell Construction: ☐ Riveted ☐ Gunite lined ☐ Epoxy-coated rivets ☐ Other (describe)		
20A. Shell Color NS	20B. Roof Color NA	20C. Year Last Painted NA
21. Shell Condition (if metal and unlined): ☐ No Rust ☐ Light Rust ☐ Dense Rust ☒ Not applicable		
22A. Is the tank heated? ☐ YES ☒ NO		
22B. If YES, provide the operating temperature (°F)		
22C. If YES, please describe how heat is provided to tank.		
23. Operating Pressure Range (psig): atmospheric to atmospheric		
24. Complete the following section for **Vertical Fixed Roof Tanks** ☒ Does Not Apply		
24A. For dome roof, provide roof radius (ft)		
24B. For cone roof, provide slope (ft/ft)		
25. Complete the following section for **Floating Roof Tanks** ☒ Does Not Apply		
25A. Year Internal Floaters Installed:		
25B. Primary Seal Type: (check one) ☐ Metallic (Mechanical) Shoe Seal ☐ Vapor Mounted Resilient Seal ☐ Liquid Mounted Resilient Seal ☐ Other (describe):		
25C. Is the Floating Roof equipped with a Secondary Seal? ☐ YES ☐ NO		
25D. If YES, how is the secondary seal mounted? (check one) ☐ Shoe ☐ Rim ☐ Other (describe):		
25E. Is the Floating Roof equipped with a weather shield? ☐ YES ☐ NO		

25F. Describe deck fittings; indicate the number of each type of fitting:		
ACCESS HATCH		
BOLT COVER, GASKETED:	UNBOLTED COVER, GASKETED:	UNBOLTED COVER, UNGASKETED:
AUTOMATIC GAUGE FLOAT WELL		
BOLT COVER, GASKETED:	UNBOLTED COVER, GASKETED:	UNBOLTED COVER, UNGASKETED:
COLUMN WELL		
BUILT-UP COLUMN – SLIDING COVER, GASKETED:	BUILT-UP COLUMN – SLIDING COVER, UNGASKETED:	PIPE COLUMN – FLEXIBLE FABRIC SLEEVE SEAL:
LADDER WELL		
PIP COLUMN – SLIDING COVER, GASKETED:	PIPE COLUMN – SLIDING COVER, UNGASKETED:	
GAUGE-HATCH/SAMPLE PORT		
SLIDING COVER, GASKETED:	SLIDING COVER, UNGASKETED:	
ROOF LEG OR HANGER WELL		
WEIGHTED MECHANICAL ACTUATION, GASKETED:	WEIGHTED MECHANICAL ACTUATION, UNGASKETED:	SAMPLE WELL-SLIT FABRIC SEAL (10% OPEN AREA)
VACUUM BREAKER		
WEIGHTED MECHANICAL ACTUATION, GASKETED:	WEIGHTED MECHANICAL ACTUATION, UNGASKETED:	
RIM VENT		
WEIGHTED MECHANICAL ACTUATION GASKETED:	WEIGHTED MECHANICAL ACTUATION, UNGASKETED:	
DECK DRAIN (3-INCH DIAMETER)		
OPEN:	90% CLOSED:	
STUB DRAIN		
1-INCH DIAMETER:		
OTHER (DESCRIBE, ATTACH ADDITIONAL PAGES IF NECESSARY)		

26. Complete the following section for Internal Floating Roof Tanks ☒ Does Not Apply	
26A. Deck Type: ☐ Bolted ☐ Welded	
26B. For Bolted decks, provide deck construction:	
26C. Deck seam: ☐ Continuous sheet construction 5 feet wide ☐ Continuous sheet construction 6 feet wide ☐ Continuous sheet construction 7 feet wide ☐ Continuous sheet construction 5 × 7.5 feet wide ☐ Continuous sheet construction 5 × 12 feet wide ☐ Other (describe)	
26D. Deck seam length (ft)	26E. Area of deck (ft^2)
For column supported tanks: 26F. Number of columns:	26G. Diameter of each column:

IV. SITE INFORMANTION (optional if providing TANKS Summary Sheets)

27. Provide the city and state on which the data in this section are based. NA	
28. Daily Average Ambient Temperature (°F)	NA
29. Annual Average Maximum Temperature (°F)	NA
30. Annual Average Minimum Temperature (°F)	NA
31. Average Wind Speed (miles/hr)	NA
32. Annual Average Solar Insulation Factor (BTU/(ft^2·day))	NA
33. Atmospheric Pressure (psia)	NA

V. LIQUID INFORMATION (optional if providing TANKS Summary Sheets)

34. Average daily temperature range of bulk liquid:	
34A. Minimum (°F) NA	34B. Maximum (°F) NA
35. Average operating pressure range of tank:	
35A. Minimum (psig) NA	35B. Maximum (psig) NA
36A. Minimum Liquid Surface Temperature (°F) NA	36B. Corresponding Vapor Pressure (psia) NA
37A. Average Liquid Surface Temperature (°F) NA	37B. Corresponding Vapor Pressure (psia) NA
38A. Maximum Liquid Surface Temperature (°F) NA	38B. Corresponding Vapor Pressure (psia) NA

39. Provide the following for <u>each</u> liquid or gas to be stored in tank. Add additional pages if necessary.

39A. Material Name or Composition	Sodium Hydroxide Solutions	Shale Bind	Shaleclear Marcellus	ShaleFloc
39B. CAS Number	1310-73-2, 7647-14-5	64742-47-8, 69011-36-5	unknown	64742-47-8, 69011-36-5
39C. Liquid Density (lb/gal)	12.76	1.0-1.1	11.19-11.38	1.0-1.1
39D. Liquid Molecular Weight (lb/lb-mole)	40.1 g/mol	unknown	unknown	unknown
39E. Vapor Molecular Weight (lb/lb-mole)	unknown	unknown	unknown	unknown

Maximum Vapor Pressure 39F. True (psia) 39G. Reid (psia)	unknown	unknown	unknown	unknown
Months Storage per Year 39H. From 39I. To	Jan to Dec	Jan to Dec	Jan to Dec	Jan to Dec

VI. EMISSIONS AND CONTROL DEVICE DATA (required)

40. Emission Control Devices (check as many as apply): ☒ Does Not Apply

- ☐ Carbon Adsorption[1]
- ☐ Condenser[1]
- ☐ Conservation Vent (psig)
  - Vacuum Setting — Pressure Setting
- ☐ Emergency Relief Valve (psig)
- ☐ Inert Gas Blanket of
- ☐ Insulation of Tank with
- ☐ Liquid Absorption (scrubber)[1]
- ☐ Refrigeration of Tank
- ☐ Rupture Disc (psig)
- ☐ Vent to Incinerator[1]
- ☐ Other[1] (describe):

[1] Complete appropriate Air Pollution Control Device Sheet.

41. Expected Emission Rate (submit Test Data or Calculations here or elsewhere in the application).

Material Name & CAS No.	Breathing Loss (lb/hr)	Working Loss Amount	Working Loss Units	Annual Loss (lb/yr)	Estimation Method[1]
NONE					

[1] EPA = EPA Emission Factor, MB = Material Balance, SS = Similar Source, ST = Similar Source Test, Throughput Data, O = Other (specify)

☒ Remember to attach emissions calculations, including TANKS Summary Sheets if applicable.

Attachment L
EMISSIONS UNIT DATA SHEET
BULK LIQUID TRANSFER OPERATIONS

Furnish the following information for each new or modified bulk liquid transfer area or loading rack, as shown on the *Equipment List Form* and other parts of this application. This form is to be used for bulk liquid transfer operations such as to and from drums, marine vessels, rail tank cars, and tank trucks.

Identification Number (as assigned on *Equipment List Form*): WL-1

1. Loading Area Name: Water Loading

2. Type of cargo vessels accommodated at this rack or transfer point (check as many as apply):

G Drums G Marine Vessels G Rail Tank Cars X Tank Trucks

3. Loading Rack or Transfer Point Data:

Number of pumps	Located on trucks - 4
Number of liquids loaded	1 – effluent water
Maximum number of marine vessels, tank trucks, tank cars, and/or drums loading at one time	4 tank trucks could load simultaneously

4. Does ballasting of marine vessels occur at this loading area?

G Yes G No X Does not apply

5. Describe cleaning location, compounds and procedure for cargo vessels using this transfer point: N/A

6. Are cargo vessels pressure tested for leaks at this or any other location?

G Yes X No

If YES, describe:

7. Projected Maximum Operating Schedule (for rack or transfer point as a whole):

Maximum	Jan. - Mar.	Apr. - June	July - Sept.	Oct. - Dec.
hours/day	24	24	24	24
days/week	7	7	7	7
weeks/quarter	all	all	all	all

8. Bulk Liquid Data *(add pages as necessary):*								
Pump ID No.		N/A						
Liquid Name		Effluent Water						
Max. daily throughput (1000 gal/day)		420						
Max. annual throughput (1000 gal/yr)		153300						
Loading Method [1]		BF/SUB						
Max. Fill Rate (gal/min) [total of 4 pumps]		1600						
Average Fill Time (min/loading)		TBD						
Max. Bulk Liquid Temperature (°F) (TANKS4.09)		57.22						
True Vapor Pressure [2]		0.2864						
Cargo Vessel Condition [3]		U						
Control Equipment or Method [4]		None						
Minimum control efficiency (%)		0						
Maximum Emission Rate	Loading (lb/hr)	9						
	Annual (lb/yr)	7316						
Estimation Method [5]		EPA/O						

[1] BF = Bottom Fill SP = Splash Fill SUB = Submerged Fill

[2] At maximum bulk liquid temperature (from TANKS)

[3] B = Ballasted Vessel, C = Cleaned, U = Uncleaned (dedicated service), O = other (describe)

[4] List as many as apply (complete and submit appropriate *Air Pollution Control Device Sheets*):CA = Carbon Adsorption LOA = Lean Oil AdsorptionCO = Condensation SC = Scrubber (Absorption)CRA = Compressor-Refrigeration-Absorption TO = Thermal Oxidation or Incineration
CRC = Compression-Refrigeration-Condensation VB = Dedicated Vapor Balance (closed system)
O = other (descibe)

[5] EPA = EPA Emission Factor as stated in AP-42
MB = Material Balance
TM = Test Measurement based upon test data submittal
O = other (describe) speciated to exclude water from total since water has a vapor pressure and would appear in the total estimated by the Loading loss equation.

9. **Proposed Monitoring, Recordkeeping, Reporting, and Testing** Please propose monitoring, recordkeeping, and reporting in order to demonstrate compliance with the proposed operating parameters. Please propose testing in order to demonstrate compliance with the proposed emissions limits.	
MONITORING See Attachment O	RECORDKEEPING See Attachment O
REPORTING See Attachment O	TESTING See Attachment O
MONITORING. PLEASE LIST AND DESCRIBE THE PROCESS PARAMETERS AND RANGES THAT ARE PROPOSED TO BE MONITORED IN ORDER TO DEMONSTRATE COMPLIANCE WITH THE OPERATION OF THIS	
RECORDKEEPING. PLEASE DESCRIBE THE PROPOSED RECORDKEEPING THAT WILL ACCOMPANY THE MONITORING.	
REPORTING. PLEASE DESCRIBE THE PROPOSED FREQUENCY OF REPORTING OF THE RECORDKEEPING.	
TESTING. PLEASE DESCRIBE ANY PROPOSED EMISSIONS TESTING FOR THIS PROCESS EQUIPMENT/AIR POLLUTION CONTROL DEVICE.	
10. Manufacturer to maintain warranty	

Attachment L
EMISSIONS UNIT DATA SHEET
BULK LIQUID TRANSFER OPERATIONS

Furnish the following information for each new or modified bulk liquid transfer area or loading rack, as shown on the *Equipment List Form* and other parts of this application. This form is to be used for bulk liquid transfer operations such as to and from drums, marine vessels, rail tank cars, and tank trucks.

Identification Number (as assigned on *Equipment List Form*): W-2

1. Loading Area Name: Water Load-In

2. Type of cargo vessels accommodated at this rack or transfer point (check as many as apply):
G Drums G Marine Vessels G Rail Tank Cars X Tank Trucks

3. Loading Rack or Transfer Point Data:

Number of pumps	Located on trucks - 4
Number of liquids loaded	1 – effluent water
Maximum number of marine vessels, tank trucks, tank cars, and/or drums loading at one time	4 tank trucks could load in simultaneously

4. Does ballasting of marine vessels occur at this loading area?
G Yes G No X Does not apply

5. Describe cleaning location, compounds and procedure for cargo vessels using this transfer point: N/A

6. Are cargo vessels pressure tested for leaks at this or any other location?
G Yes X No
If YES, describe:

7. Projected Maximum Operating Schedule (for rack or transfer point as a whole):

Maximum	Jan. - Mar.	Apr. - June	July - Sept.	Oct. - Dec.
hours/day	24	24	24	24
days/week	7	7	7	7
weeks/quarter	all	all	all	all

8. Bulk Liquid Data *(add pages as necessary):*								
Pump ID No.		N/A						
Liquid Name		Effluent Water						
Max. daily throughput (1000 gal/day)		420						
Max. annual throughput (1000 gal/yr)		153300						
Loading Method [1]		BF/SUB						
Max. Fill Rate (gal/min) [total of 4 pumps]		1600						
Average Fill Time (min/loading)		TBD						
Max. Bulk Liquid Temperature (°F) (TANKS4.09)		57.22						
True Vapor Pressure [2]		0.2864						
Cargo Vessel Condition [3]		U						
Control Equipment or Method [4]		None						
Minimum control efficiency (%)		0						
Maximum Emission Rate	Loading (lb/hr)	9						
	Annual (lb/yr)	7316						
Estimation Method [5]		EPA/O						

[1] BF = Bottom Fill SP = Splash Fill SUB = Submerged Fill

[2] At maximum bulk liquid temperature (from TANKS)

[3] B = Ballasted Vessel, C = Cleaned, U = Uncleaned (dedicated service), O = other (describe)

[4] List as many as apply (complete and submit appropriate *Air Pollution Control Device Sheets*):CA = Carbon Adsorption LOA = Lean Oil AdsorptionCO = Condensation SC = Scrubber (Absorption)CRA = Compressor-Refrigeration-Absorption TO = Thermal Oxidation or Incineration
CRC = Compression-Refrigeration-Condensation VB = Dedicated Vapor Balance (closed system)
O = other (descibe)

[5] EPA = EPA Emission Factor as stated in AP-42
MB = Material Balance
TM = Test Measurement based upon test data submittal
O = other (describe) speciated to exclude water from total since water has a vapor pressure and would appear in the total estimated by the Loading loss equation.

9. **Proposed Monitoring, Recordkeeping, Reporting, and Testing**

Please propose monitoring, recordkeeping, and reporting in order to demonstrate compliance with the proposed operating parameters. Please propose testing in order to demonstrate compliance with the proposed emissions limits.

MONITORING	RECORDKEEPING
See Attachment O	See Attachment O
REPORTING	**TESTING**
See Attachment O	See Attachment O

MONITORING. PLEASE LIST AND DESCRIBE THE PROCESS PARAMETERS AND RANGES THAT ARE PROPOSED TO BE MONITORED IN ORDER TO DEMONSTRATE COMPLIANCE WITH THE OPERATION OF THIS

RECORDKEEPING. PLEASE DESCRIBE THE PROPOSED RECORDKEEPING THAT WILL ACCOMPANY THE MONITORING.

REPORTING. PLEASE DESCRIBE THE PROPOSED FREQUENCY OF REPORTING OF THE RECORDKEEPING.

TESTING. PLEASE DESCRIBE ANY PROPOSED EMISSIONS TESTING FOR THIS PROCESS EQUIPMENT/AIR POLLUTION CONTROL DEVICE.

10. Manufacturer to maintain warranty

Process Description

Waters, typically high in Total Suspended Solids (TSS), generated by Oil and Gas Exploration and Production activities will be collected in atmospheric tanker trucks at various client locations and sent to Central Station for recycle. Since all influent liquids have been subjected to significant weathering in an open atmosphere condition, flash emissions have occurred prior to shipping to Central Station.

When a truck enters the facility, a sample will be collected and reviewed to determine if the material is acceptable. Unacceptable materials will be immediately rejected. Acceptable material will be off-loaded (W2; 42E) via electrically operated pumps and sent to the influent storage tanks (ITS1-16; 1E-16E) via the influent header pipe system. If upon triage trucks are determined to have an influent with a TSS >50,000mg/L the client will have the option to bypass treatment and go directly to the filter press.

From the influent tanks the water will flow through a series of static mixers (WT1-2; 17E-18E) where treatment chemicals to adjust pH and flocculants to settle solids will be added. Treatment chemicals are brought to the site in totes and stored in four 300-gallon day tanks (DT1-4; 44E-47E). The materials, including sodium hydroxide, flocculants and settling agents, are non-volatile and will not contribute any criteria pollutant emissions. The water will then pass through a series of settling tanks (ST1-5; 19E-23E) allowing time for solids to settle. The post treatment water then flows to multiple effluent holding tanks (ET1-12; 24E-35E). From the holding tanks the water is pumped back into tanker trucks for reuse at oil and gas facilities. Additionally, a brine mixing tank may possibly be installed at the facility. A portion of effluent water would flow from the holding tanks to the 90 bbl open top brine mixing tank (BM1; 39E), which would employ two electrical pumps to mix salt and water up to a desired specific gravity. If installed, emissions from the brine mixing process would be de minimis.

Collected solids are pumped to several dewatering tanks where liquids are allowed settle (SI1-2; 36E-37E). The sludge is the processed through a filter press to render the wet cake material acceptable for landfilling (FT1; 38E). Any water decanted or pressed from the sludge is used for recycling purposes.

Process Flow Diagram

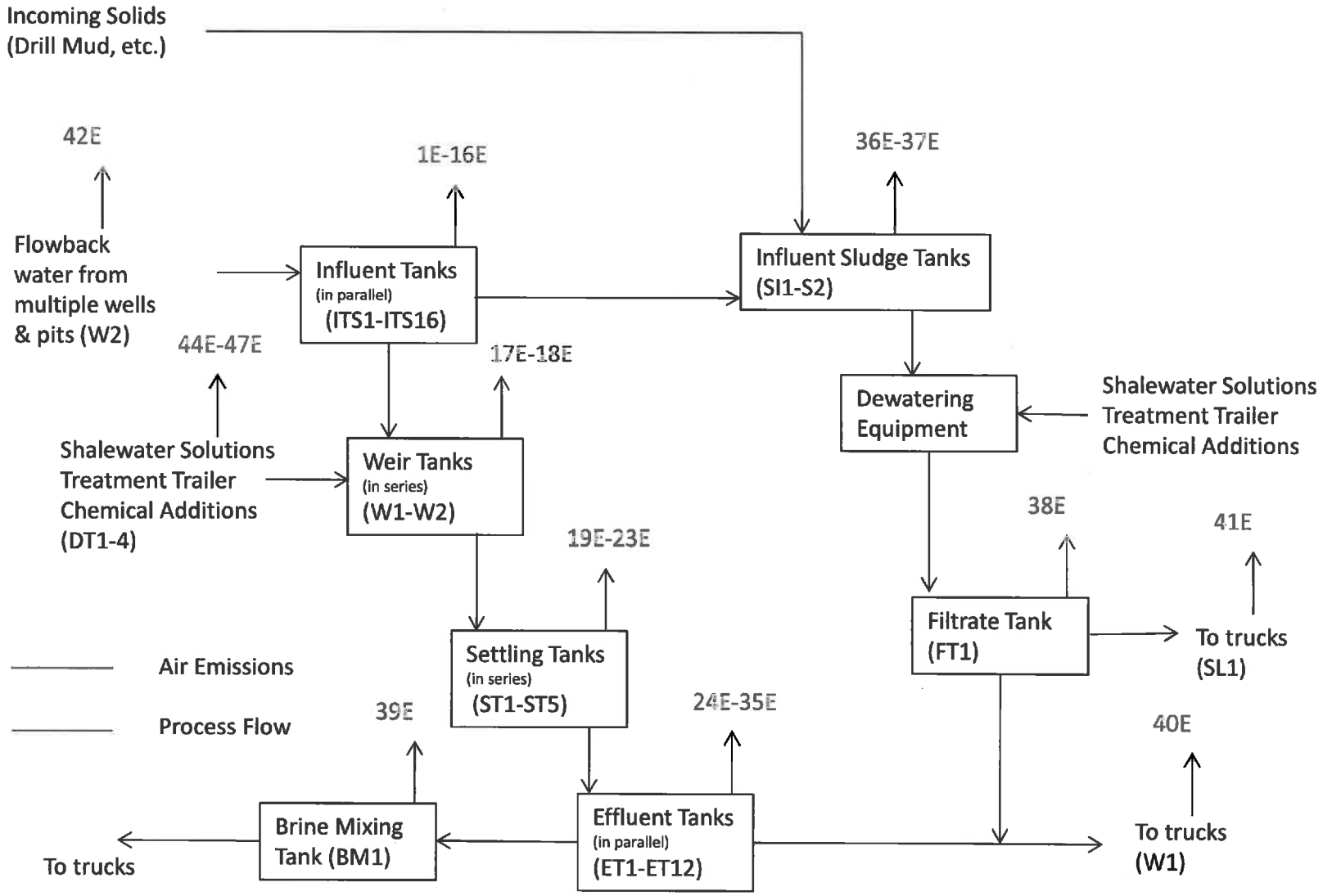

Attachment J

EMISSION POINTS DATA SUMMARY SHEET

Table 1: Emissions Data

Emission Point ID No. (Must match Emission Units Table-& Plot Plan)	Emission Point Type[1]	Emission Unit Vented Through This Point (Must match Emission Units Table & Plot Plan)		Air Pollution Control Device		Vent Time for Emission Unit (chemical processes only)		All Regulated Pollutants - Chemical Name/CAS[3] (Speciate VOCs & HAPS)	Maximum Potential Uncontrolled Emissions[4]		Maximum Potential Controlled Emissions[5]		Emission Form or Phase (At exit conditions, Solid, Liquid or Gas/Vapor)	Est. Method Used[6]	Emission Concentration[7] (ppmv or mg/m^4)
		ID No.	Source			Short Term[2]	Max (hr/yr)		lb/hr	ton/yr	lb/hr	ton/yr			
1E	Pressurized Relief Vent	ITS1	Influent Storage Tank #1			C	8760	VOC Benzene Toluene Ethylbenzene Xylene Total HAPS	0.03 <0.01 <0.01 <0.01 <0.01 <0.01	0.14 <0.01 <0.01 <0.01 <0.01 <0.01	0.03 <0.01 <0.01 <0.01 <0.01 <0.01	0.14 <0.01 <0.01 <0.01 <0.01 <0.01	Gas/Vapor	EE	
2E	Pressurized Relief Vent	ITS2	Influent Storage Tank #2			C	8760	VOC Benzene Toluene Ethylbenzene Xylene Total HAPS	0.03 <0.01 <0.01 <0.01 <0.01 <0.01	0.14 <0.01 <0.01 <0.01 <0.01 <0.01	0.03 <0.01 <0.01 <0.01 <0.01 <0.01	0.14 <0.01 <0.01 <0.01 <0.01 <0.01	Gas/Vapor	EE	

3E	Pressurized Relief Vent	ITS3	Influent Storage Tank #3			C	8760	VOC Benzene Toluene Ethylbenzene Xylene Total HAPS	0.03 <0.01 <0.01 <0.01 <0.01 <0.01	0.14 <0.01 <0.01 <0.01 <0.01 <0.01	0.03 <0.01 <0.01 <0.01 <0.01 <0.01	0.14 <0.01 <0.01 <0.01 <0.01 <0.01	Gas/Vapor	EE	
4E	Pressurized Relief Vent	ITS4	Influent Storage Tank #4			C	8760	VOC Benzene Toluene Ethylbenzene Xylene Total HAPS	0.03 <0.01 <0.01 <0.01 <0.01 <0.01	0.14 <0.01 <0.01 <0.01 <0.01 <0.01	0.03 <0.01 <0.01 <0.01 <0.01 <0.01	0.14 <0.01 <0.01 <0.01 <0.01 <0.01	Gas/Vapor	EE	
5E	Pressurized Relief Vent	ITS5	Influent Storage Tank #5			C	8760	VOC Benzene Toluene Ethylbenzene Xylene Total HAPS	0.03 <0.01 <0.01 <0.01 <0.01 <0.01	0.14 <0.01 <0.01 <0.01 <0.01 <0.01	0.03 <0.01 <0.01 <0.01 <0.01 <0.01	0.14 <0.01 <0.01 <0.01 <0.01 <0.01	Gas/Vapor	EE	
6E	Pressurized Relief Vent	ITS6	Influent Storage Tank #6			C	8760	VOC Benzene Toluene Ethylbenzene Xylene Total HAPS	0.03 <0.01 <0.01 <0.01 <0.01 <0.01	0.14 <0.01 <0.01 <0.01 <0.01 <0.01	0.03 <0.01 <0.01 <0.01 <0.01 <0.01	0.14 <0.01 <0.01 <0.01 <0.01 <0.01	Gas/Vapor	EE	

7E	Pressurized Relief Vent	ITS7	Influent Storage Tank #7			C	8760	VOC Benzene Toluene Ethylbenzene Xylene Total HAPS	0.03 <0.01 <0.01 <0.01 <0.01 <0.01	0.14 <0.01 <0.01 <0.01 <0.01 <0.01	0.03 <0.01 <0.01 <0.01 <0.01 <0.01	0.14 <0.01 <0.01 <0.01 <0.01 <0.01	Gas/Vapor	EE	
8E	Pressurized Relief Vent	ITS8	Influent Storage Tank #8			C	8760	VOC Benzene Toluene Ethylbenzene Xylene Total HAPS	0.03 <0.01 <0.01 <0.01 <0.01 <0.01	0.14 <0.01 <0.01 <0.01 <0.01 <0.01	0.03 <0.01 <0.01 <0.01 <0.01 <0.01	0.14 <0.01 <0.01 <0.01 <0.01 <0.01	Gas/Vapor	EE	
9E	Pressurized Relief Vent	ITS9	Influent Storage Tank #9			C	8760	VOC Benzene Toluene Ethylbenzene Xylene Total HAPS	0.03 <0.01 <0.01 <0.01 <0.01 <0.01	0.14 <0.01 <0.01 <0.01 <0.01 <0.01	0.03 <0.01 <0.01 <0.01 <0.01 <0.01	0.14 <0.01 <0.01 <0.01 <0.01 <0.01	Gas/Vapor	EE	
10E	Pressurized Relief Vent	ITS10	Influent Storage Tank #10			C	8760	VOC Benzene Toluene Ethylbenzene Xylene Total HAPS	0.03 <0.01 <0.01 <0.01 <0.01 <0.01	0.14 <0.01 <0.01 <0.01 <0.01 <0.01	0.03 <0.01 <0.01 <0.01 <0.01 <0.01	0.14 <0.01 <0.01 <0.01 <0.01 <0.01	Gas/Vapor	EE	

11E	Pressurized Relief Vent	ITS11	Influent Storage Tank #11			C	8760	VOC Benzene Toluene Ethylbenzene Xylene Total HAPS	0.03 <0.01 <0.01 <0.01 <0.01 <0.01	0.14 <0.01 <0.01 <0.01 <0.01 <0.01	0.03 <0.01 <0.01 <0.01 <0.01 <0.01	0.14 <0.01 <0.01 <0.01 <0.01 <0.01	Gas/Vapor	EE	
12E	Pressurized Relief Vent	ITS12	Influent Storage Tank #12			C	8760	VOC Benzene Toluene Ethylbenzene Xylene Total HAPS	0.03 <0.01 <0.01 <0.01 <0.01 <0.01	0.14 <0.01 <0.01 <0.01 <0.01 <0.01	0.03 <0.01 <0.01 <0.01 <0.01 <0.01	0.14 <0.01 <0.01 <0.01 <0.01 <0.01	Gas/Vapor	EE	
13E	Pressurized Relief Vent	ITS13	Influent Storage Tank #13			C	8760	VOC Benzene Toluene Ethylbenzene Xylene Total HAPS	0.03 <0.01 <0.01 <0.01 <0.01 <0.01	0.14 <0.01 <0.01 <0.01 <0.01 <0.01	0.03 <0.01 <0.01 <0.01 <0.01 <0.01	0.14 <0.01 <0.01 <0.01 <0.01 <0.01	Gas/Vapor	EE	
14E	Pressurized Relief Vent	ITS14	Influent Storage Tank #14			C	8760	VOC Benzene Toluene Ethylbenzene Xylene Total HAPS	0.03 <0.01 <0.01 <0.01 <0.01 <0.01	0.14 <0.01 <0.01 <0.01 <0.01 <0.01	0.03 <0.01 <0.01 <0.01 <0.01 <0.01	0.14 <0.01 <0.01 <0.01 <0.01 <0.01	Gas/Vapor	EE	

15E	Pressurized Relief Vent	ITS15	Influent Storage Tank #15			C	8760	VOC Benzene Toluene Ethylbenzene Xylene Total HAPS	0.03 <0.01 <0.01 <0.01 <0.01 <0.01	0.14 <0.01 <0.01 <0.01 <0.01 <0.01	0.03 <0.01 <0.01 <0.01 <0.01 <0.01	0.14 <0.01 <0.01 <0.01 <0.01 <0.01	Gas/Vapor	EE	
16E	Pressurized Relief Vent	ITS16	Influent Storage Tank #16			C	8760	VOC Benzene Toluene Ethylbenzene Xylene Total HAPS	0.03 <0.01 <0.01 <0.01 <0.01 <0.01	0.14 <0.01 <0.01 <0.01 <0.01 <0.01	0.03 <0.01 <0.01 <0.01 <0.01 <0.01	0.14 <0.01 <0.01 <0.01 <0.01 <0.01	Gas/Vapor	EE	
17E	Pressurized Relief Vent	W1	Weir Tank #1			C	8760	VOC Benzene Toluene Ethylbenzene Xylene Total HAPS	0.33 <0.01 <0.01 <0.01 <0.01 <0.01	1.45 0.021 <0.01 <0.01 <0.01 0.03	0.33 <0.01 <0.01 <0.01 <0.01 <0.01	1.45 0.021 <0.01 <0.01 <0.01 0.03	Gas/Vapor	EE	
18E	Pressurized Relief Vent	W2	Weir Tank #2			C	8760	VOC Benzene Toluene Ethylbenzene Xylene Total HAPS	0.33 <0.01 <0.01 <0.01 <0.01 <0.01	1.45 0.021 <0.01 <0.01 <0.01 0.03	0.33 <0.01 <0.01 <0.01 <0.01 <0.01	1.45 0.021 <0.01 <0.01 <0.01 0.03	Gas/Vapor	EE	

19E	Pressurized Relief Vent	ST1	Settling Tank #1			C	8760	VOC Benzene Toluene Ethylbenzene Xylene Total HAPS	0.33 <0.01 <0.01 <0.01 <0.01 <0.01	1.45 0.021 <0.01 <0.01 <0.01 0.03	0.33 <0.01 <0.01 <0.01 <0.01 <0.01	1.45 0.021 <0.01 <0.01 <0.01 0.03	Gas/Vapor	EE	
20E	Pressurized Relief Vent	ST2	Settling Tank #2			C	8760	VOC Benzene Toluene Ethylbenzene Xylene Total HAPS	0.33 <0.01 <0.01 <0.01 <0.01 <0.01	1.45 0.021 <0.01 <0.01 <0.01 0.03	0.33 <0.01 <0.01 <0.01 <0.01 <0.01	1.45 0.021 <0.01 <0.01 <0.01 0.03	Gas/Vapor	EE	
21E	Pressurized Relief Vent	ST3	Settling Tank #3			C	8760	VOC Benzene Toluene Ethylbenzene Xylene Total HAPS	0.33 <0.01 <0.01 <0.01 <0.01 <0.01	1.45 0.021 <0.01 <0.01 <0.01 0.03	0.33 <0.01 <0.01 <0.01 <0.01 <0.01	1.45 0.021 <0.01 <0.01 <0.01 0.03	Gas/Vapor	EE	
22E	Pressurized Relief Vent	ST4	Settling Tank #4			C	8760	VOC Benzene Toluene Ethylbenzene Xylene Total HAPS	0.33 <0.01 <0.01 <0.01 <0.01 <0.01	1.45 0.021 <0.01 <0.01 <0.01 0.03	0.33 <0.01 <0.01 <0.01 <0.01 <0.01	1.45 0.021 <0.01 <0.01 <0.01 0.03	Gas/Vapor	EE	

23E	Pressurized Relief Vent	ST5	Settling Tank #5			C	8760	VOC Benzene Toluene Ethylbenzene Xylene Total HAPS	0.33 <0.01 <0.01 <0.01 <0.01 <0.01	1.45 0.021 <0.01 <0.01 <0.01 0.03	0.33 <0.01 <0.01 <0.01 <0.01 <0.01	1.45 0.021 <0.01 <0.01 <0.01 0.03	Gas/Vapor	EE	
24E	Pressurized Relief Vent	ET1	Effluent Tank #1			C	8760	VOC Benzene Toluene Ethylbenzene Xylene Total HAPS	0.04 <0.01 <0.01 <0.01 <0.01 <0.01	0.16 <0.01 <0.01 <0.01 <0.01 <0.01	0.04 <0.01 <0.01 <0.01 <0.01 <0.01	0.16 <0.01 <0.01 <0.01 <0.01 <0.01	Gas/Vapor	EE	
25E	Pressurized Relief Vent	ET2	Effluent Tank #2			C	8760	VOC Benzene Toluene Ethylbenzene Xylene Total HAPS	0.04 <0.01 <0.01 <0.01 <0.01 <0.01	0.16 <0.01 <0.01 <0.01 <0.01 <0.01	0.04 <0.01 <0.01 <0.01 <0.01 <0.01	0.16 <0.01 <0.01 <0.01 <0.01 <0.01	Gas/Vapor	EE	
26E	Pressurized Relief Vent	ET3	Effluent Tank #3			C	8760	VOC Benzene Toluene Ethylbenzene Xylene Total HAPS	0.04 <0.01 <0.01 <0.01 <0.01 <0.01	0.16 <0.01 <0.01 <0.01 <0.01 <0.01	0.04 <0.01 <0.01 <0.01 <0.01 <0.01	0.16 <0.01 <0.01 <0.01 <0.01 <0.01	Gas/Vapor	EE	

27E	Pressurized Relief Vent	ET4	Effluent Tank #4			C	8760	VOC Benzene Toluene Ethylbenzene Xylene Total HAPS	0.04 <0.01 <0.01 <0.01 <0.01 <0.01	0.16 <0.01 <0.01 <0.01 <0.01 <0.01	0.04 <0.01 <0.01 <0.01 <0.01 <0.01	0.16 <0.01 <0.01 <0.01 <0.01 <0.01	Gas/Vapor	EE	
28E	Pressurized Relief Vent	ET5	Effluent Tank #5			C	8760	VOC Benzene Toluene Ethylbenzene Xylene Total HAPS	0.04 <0.01 <0.01 <0.01 <0.01 <0.01	0.16 <0.01 <0.01 <0.01 <0.01 <0.01	0.04 <0.01 <0.01 <0.01 <0.01 <0.01	0.16 <0.01 <0.01 <0.01 <0.01 <0.01	Gas/Vapor	EE	
29E	Pressurized Relief Vent	ET6	Effluent Tank #6			C	8760	VOC Benzene Toluene Ethylbenzene Xylene Total HAPS	0.04 <0.01 <0.01 <0.01 <0.01 <0.01	0.16 <0.01 <0.01 <0.01 <0.01 <0.01	0.04 <0.01 <0.01 <0.01 <0.01 <0.01	0.16 <0.01 <0.01 <0.01 <0.01 <0.01	Gas/Vapor	EE	
30E	Pressurized Relief Vent	ET7	Effluent Tank #7			C	8760	VOC Benzene Toluene Ethylbenzene Xylene Total HAPS	0.04 <0.01 <0.01 <0.01 <0.01 <0.01	0.16 <0.01 <0.01 <0.01 <0.01 <0.01	0.04 <0.01 <0.01 <0.01 <0.01 <0.01	0.16 <0.01 <0.01 <0.01 <0.01 <0.01	Gas/Vapor	EE	

31E	Pressurized Relief Vent	ET8	Effluent Tank #8			C	8760	VOC Benzene Toluene Ethylbenzene Xylene Total HAPS	0.04 <0.01 <0.01 <0.01 <0.01 <0.01	0.16 <0.01 <0.01 <0.01 <0.01 <0.01	0.04 <0.01 <0.01 <0.01 <0.01 <0.01	0.16 <0.01 <0.01 <0.01 <0.01 <0.01	Gas/Vapor	EE	
32E	Pressurized Relief Vent	ET9	Effluent Tank #9			C	8760	VOC Benzene Toluene Ethylbenzene Xylene Total HAPS	0.04 <0.01 <0.01 <0.01 <0.01 <0.01	0.16 <0.01 <0.01 <0.01 <0.01 <0.01	0.04 <0.01 <0.01 <0.01 <0.01 <0.01	0.16 <0.01 <0.01 <0.01 <0.01 <0.01	Gas/Vapor	EE	
33E	Pressurized Relief Vent	ET10	Effluent Tank #10			C	8760	VOC Benzene Toluene Ethylbenzene Xylene Total HAPS	0.04 <0.01 <0.01 <0.01 <0.01 <0.01	0.16 <0.01 <0.01 <0.01 <0.01 <0.01	0.04 <0.01 <0.01 <0.01 <0.01 <0.01	0.16 <0.01 <0.01 <0.01 <0.01 <0.01	Gas/Vapor	EE	
34E	Pressurized Relief Vent	ET11	Effluent Tank #11			C	8760	VOC Benzene Toluene Ethylbenzene Xylene Total HAPS	0.04 <0.01 <0.01 <0.01 <0.01 <0.01	0.16 <0.01 <0.01 <0.01 <0.01 <0.01	0.04 <0.01 <0.01 <0.01 <0.01 <0.01	0.16 <0.01 <0.01 <0.01 <0.01 <0.01	Gas/Vapor	EE	

35E	Pressurized Relief Vent	ET12	Effluent Tank #12			C	8760	VOC Benzene Toluene Ethylbenzene Xylene Total HAPS	0.04 <0.01 <0.01 <0.01 <0.01 <0.01	0.16 <0.01 <0.01 <0.01 <0.01 <0.01	0.04 <0.01 <0.01 <0.01 <0.01 <0.01	0.16 <0.01 <0.01 <0.01 <0.01 <0.01	Gas/Vapor	EE	
36E	Pressurized Relief Vent	SI1	Sludge Influent Tank #1			C	8760	VOC Benzene Toluene Ethylbenzene Xylene Total HAPS	0.04 <0.01 <0.01 <0.01 <0.01 <0.01	0.19 <0.01 <0.01 <0.01 <0.01 <0.01	0.04 <0.01 <0.01 <0.01 <0.01 <0.01	0.19 <0.01 <0.01 <0.01 <0.01 <0.01	Gas/Vapor	EE	
37E	Pressurized Relief Vent	SI2	Sludge Influent Tank #2			C	8760	VOC Benzene Toluene Ethylbenzene Xylene Total HAPS	0.04 <0.01 <0.01 <0.01 <0.01 <0.01	0.19 <0.01 <0.01 <0.01 <0.01 <0.01	0.04 <0.01 <0.01 <0.01 <0.01 <0.01	0.19 <0.01 <0.01 <0.01 <0.01 <0.01	Gas/Vapor	EE	
38E	Pressurized Relief Vent	F1	Filtrate Water #1			C	8760	VOC Benzene Toluene Ethylbenzene Xylene Total HAPS	0.03 <0.01 <0.01 <0.01 <0.01 <0.01	0.13 <0.01 <0.01 <0.01 <0.01 <0.01	0.03 <0.01 <0.01 <0.01 <0.01 <0.01	0.13 <0.01 <0.01 <0.01 <0.01 <0.01	Gas/Vapor	EE	

39E	Open Top Tank	BM1	Brine Mixing Tank 1			NA	8760	VOC Benzene Toluene Ethylbenzene Xylene Total HAPS	<0.01 <0.01 <0.01 <0.01 <0.01 <0.01	<0.01 <0.01 <0.01 <0.01 <0.01 <0.01	<0.01 <0.01 <0.01 <0.01 <0.01 <0.01	<0.01 <0.01 <0.01 <0.01 <0.01 <0.01	Gas/Vapor	EE	
40E	Loading Loss	W-1	Water Loadout			NA	8760	VOC Total HAPS	0.73 0.02	3.18 0.07	0.73 0.02	3.18 0.07	Gas/Vapor	EE	
41E	Loading Loss	SL-1	Sludge Loadout			NA	8760	VOC Total HAPS	0.05 <0.01	0.22 <0.01	0.05 <0.01	0.22 <0.01	Gas/Vapor	EE	
42E	Loading Loss	W-2	Water Load in			NA	8760	VOC Total HAPS	0.73 0.02	3.18 0.07	0.73 0.02	3.18 0.07	Gas/Vapor	EE	
43E	Fugitive	Unpaved Haul Road	Unpaved Haul Road			NA	8760	PM10	6.9	30.22	6.9	30.22	Gas/Vapor	EE	
44E	Pressurized Relief Vent	DT1	Chemical Storage Day Tank 1			NA	8760	None	NA	NA	NA	NA	Gas/Vapor	NA	
45E	Pressurized Relief Vent	DT2	Chemical Storage Day Tank 2			NA	8760	None	NA	NA	NA	NA	Gas/Vapor	NA	

46E	Pressurized Relief Vent	DT3	Chemical Storage Day Tank 3			NA	8760	None	NA	NA	NA	NA	Gas/Vapor	NA	
47E	Pressurized Relief Vent	DT4	Chemical Storage Day Tank 4			NA	8760	None	NA	NA	NA	NA	Gas/Vapor	NA	

The EMISSION POINTS DATA SUMMARY SHEET provides a summation of emissions by emission unit. Note that uncaptured process emission unit emissions are not typically considered to be fugitive and must be accounted for on the appropriate EMISSIONS UNIT DATA SHEET and on the EMISSION POINTS DATA SUMMARY SHEET. Please note that total emissions from the source are equal to all vented emissions, all fugitive emissions, plus all other emissions (e.g. uncaptured emissions). Please complete the FUGITIVE EMISSIONS DATA SUMMARY SHEET for fugitive emission activities.

[1] Please add descriptors such as upward vertical stack, downward vertical stack, horizontal stack, relief vent, rain cap, etc.

[2] Indicate by "C" if venting is continuous. Otherwise, specify the average short-term venting rate with units, for intermittent venting (ie., 15 min/hr). Indicate as many rates as needed to clarify frequency of venting (e.g., 5 min/day, 2 days/wk).

[3] List all regulated air pollutants. Speciate VOCs, including all HAPs. Follow chemical name with Chemical Abstracts Service (CAS) number. **LIST** Acids, CO, CS_2, VOCs, H_2S, Inorganics, Lead, Organics, O_3, NO, NO_2, SO_2, SO_3, all applicable Greenhouse Gases (including CO_2 and methane), etc. **DO NOT LIST** H_2, H_2O, N_2, O_2, and Noble Gases.

[4] Give maximum potential emission rate with no control equipment operating. If emissions occur for less than 1 hr, then record emissions per batch in minutes (e.g. 5 lb VOC/20 minute batch).

[5] Give maximum potential emission rate with proposed control equipment operating. If emissions occur for less than 1 hr, then record emissions per batch in minutes (e.g. 5 lb VOC/20 minute batch).

[6] Indicate method used to determine emission rate as follows: MB = material balance; ST = stack test (give date of test); EE = engineering estimate; O = other (specify).

[7] Provide for all pollutant emissions. Typically, the units of parts per million by volume (ppmv) are used. If the emission is a mineral acid (sulfuric, nitric, hydrochloric or phosphoric) use units of milligram per dry cubic meter (mg/m^3) at standard conditions (68 °F and 29.92 inches Hg) (see 45CSR7). If the pollutant is SO_2, use units of ppmv (See 45CSR10).

Attachment J

EMISSION POINTS DATA SUMMARY SHEET

Table 2: Release Parameter Data								
Emission Point ID No.	Inner Diameter (ft.)	Exit Gas			Emission Point Elevation (ft)		UTM Coordinates (km)	
		Temp. (°F)	Volumetric Flow [1] (acfm) *at operating conditions*	Velocity (fps)	Ground Level *(Height above mean sea level)*	Stack Height [2] *(Release height of emissions above ground level)*	Northing	Easting
1E	0.34	Atmospheric	Unknown	Unknown	810	9	4347954	516169
2E	0.34	Atmospheric	Unknown	Unknown	810	9	4347954	516169
3E	0.34	Atmospheric	Unknown	Unknown	810	9	4347954	516169
4E	0.34	Atmospheric	Unknown	Unknown	810	9	4347954	516169
5E	0.34	Atmospheric	Unknown	Unknown	810	9	4347954	516169
6E	0.34	Atmospheric	Unknown	Unknown	810	9	4347954	516169
7E	0.34	Atmospheric	Unknown	Unknown	810	9	4347954	516169
8E	0.34	Atmospheric	Unknown	Unknown	810	9	4347954	516169
9E	0.34	Atmospheric	Unknown	Unknown	810	9	4347954	516169
10E	0.34	Atmospheric	Unknown	Unknown	810	9	4347954	516169
11E	0.34	Atmospheric	Unknown	Unknown	810	9	4347954	516169
12E	0.34	Atmospheric	Unknown	Unknown	810	9	4347954	516169

13E	0.34	Atmospheric	Unknown	Unknown	810	9	4347954	516169
14E	0.34	Atmospheric	Unknown	Unknown	810	9	4347954	516169
15E	0.34	Atmospheric	Unknown	Unknown	810	9	4347954	516169
16E	0.34	Atmospheric	Unknown	Unknown	810	9	4347954	516169
17E	0.34	Atmospheric	Unknown	Unknown	810	9	4347954	516169
18E	0.34	Atmospheric	Unknown	Unknown	810	9	4347954	516169
19E	0.34	Atmospheric	Unknown	Unknown	810	9	4347954	516169
20E	0.34	Atmospheric	Unknown	Unknown	810	9	4347954	516169
21E	0.34	Atmospheric	Unknown	Unknown	810	9	4347954	516169
22E	0.34	Atmospheric	Unknown	Unknown	810	9	4347954	516169
23E	0.34	Atmospheric	Unknown	Unknown	810	9	4347954	516169
24E	0.34	Atmospheric	Unknown	Unknown	810	9	4347954	516169
25E	0.34	Atmospheric	Unknown	Unknown	810	9	4347954	516169
26E	0.34	Atmospheric	Unknown	Unknown	810	9	4347954	516169
27E	0.34	Atmospheric	Unknown	Unknown	810	9	4347954	516169
28E	0.34	Atmospheric	Unknown	Unknown	810	9	4347954	516169
29E	0.34	Atmospheric	Unknown	Unknown	810	9	4347954	516169
30E	0.34	Atmospheric	Unknown	Unknown	810	9	4347954	516169
31E	0.34	Atmospheric	Unknown	Unknown	810	9	4347954	516169
32E	0.34	Atmospheric	Unknown	Unknown	810	9	4347954	516169
33E	0.34	Atmospheric	Unknown	Unknown	810	9	4347954	516169
34E	0.34	Atmospheric	Unknown	Unknown	810	9	4347954	516169

35E	0.34	Atmospheric	Unknown	Unknown	810	9	4347954	516169
36E	0.34	Atmospheric	Unknown	Unknown	810	9	4347954	516169
37E	0.34	Atmospheric	Unknown	Unknown	810	9	4347954	516169
38E	0.34	Atmospheric	Unknown	Unknown	810	9	4347954	516169
39E	NA	Atmospheric	Unknown	Unknown	810	10	4347954	516169
40E	NA	Atmospheric	Unknown	Unknown	NA	NA	4347954	516169
41E	NA	Atmospheric	Unknown	Unknown	NA	NA	4347954	516169
42E	NA	Atmospheric	Unknown	Unknown	NA	NA	4347954	516169
43E	NA	Atmospheric	Unknown	Unknown	NA	NA	4347954	516169
44E	Unknown	Unknown	Unknown	Unknown	810	6	4347954	516169
45E	Unknown	Unknown	Unknown	Unknown	810	6	4347954	516169
46E	Unknown	Unknown	Unknown	Unknown	810	6	4347954	516169
47E	Unknown	Unknown	Unknown	Unknown	810	6	4347954	516169

[1] Give at operating conditions. Include inerts.

[2] Release height of emissions above ground level.

Emissions Summary - Shalewater Solutions Facility

Based on: 10,000 bbl/day 153,300,000 gal /yr total thoroughput

6/6/2016

Emission Point #	Source	Tank Characteristics: Volume (Gals)	Dimensions (Dia x Ht ft)	Material	Throughput (Gals/Yr)	Emissions Results VOC Emissions Lbs/Hr	VOC Tons/Yr	Emissions Results HAPS Lbs/Hr	HAPS Tons/Yr	Comments	Assumptions	TANKS Results (lbs/yr): Water	BTEX Total	VOCs Tot	Benz	Ethyl	Toluene	Xylenes	Gasoline	TOTAL
1E	Influent Storage Tank 1 (ITS 1)	21,000	8.5 x 45	Steel	9,581,250	0.031	0.137	0.001	0.003	Influent water storage, closed top frack tanks manifolded together for storage and equalization; 1/16 of influent material goes through each tank	Assuming 100,000ppm VOC (10%); RVP 6 plus BTEX (MW adjusted to 22)	318.31	5.83	274.02	4	0.38	1.14	0.31	268.19	592.33
8E	Influent Storage Tank 2 (ITS 2)	21,000	8.5 x 45	Steel	9,581,250	0.031	0.137	0.001	0.003			318.31	5.83	274.02	4	0.38	1.14	0.31	268.19	592.33
3E	Influent Storage Tank 3 (ITS 3)	21,000	8.5 x 45	Steel	9,581,250	0.031	0.137	0.001	0.003			318.31	5.83	274.02	4	0.38	1.14	0.31	268.19	592.33
4E	Influent Storage Tank 4 (ITS 4)	21,000	8.5 x 45	Steel	9,581,250	0.031	0.137	0.001	0.003			318.31	5.83	274.02	4	0.38	1.14	0.31	268.19	592.33
5E	Influent Storage Tank 5 (ITS 5)	21,000	8.5 x 45	Steel	9,581,250	0.031	0.137	0.001	0.003			318.31	5.83	274.02	4	0.38	1.14	0.31	268.19	592.33
6E	Influent Storage Tank 6 (ITS 6)	21,000	8.5 x 45	Steel	9,581,250	0.031	0.137	0.001	0.003			318.31	5.83	274.02	4	0.38	1.14	0.31	268.19	592.33
7E	Influent Storage Tank 7 (ITS 7)	21,000	8.5 x 45	Steel	9,581,250	0.031	0.137	0.001	0.003			318.31	5.83	274.02	4	0.38	1.14	0.31	268.19	592.33
8E	Influent Storage Tank 8 (ITS 8)	21,000	8.5 x 45	Steel	9,581,250	0.031	0.137	0.001	0.003			318.31	5.83	274.02	4	0.38	1.14	0.31	268.19	592.33
9E	Influent Storage Tank 9 (ITS 9)	21,000	8.5 x 45	Steel	9,581,250	0.031	0.137	0.001	0.003			318.31	5.83	274.02	4	0.38	1.14	0.31	268.19	592.33
10E	Influent Storage Tank 10 (ITS 10)	21,000	8.5 x 45	Steel	9,581,250	0.031	0.137	0.001	0.003			318.31	5.83	274.02	4	0.38	1.14	0.31	268.19	592.33
11E	Influent Storage Tank 11 (ITS 11)	21,000	8.5 x 45	Steel	9,581,250	0.031	0.137	0.001	0.003			318.31	5.83	274.02	4	0.38	1.14	0.31	268.19	592.33
12E	Influent Storage Tank 12 (ITS 12)	21,000	8.5 x 45	Steel	9,581,250	0.031	0.137	0.001	0.003			318.31	5.83	274.02	4	0.38	1.14	0.31	268.19	592.33
13E	Influent Storage Tank 13 (ITS 13)	21,000	8.5 x 45	Steel	9,581,250	0.031	0.137	0.001	0.003			318.31	5.83	274.02	4	0.38	1.14	0.31	268.19	592.33
14E	Influent Storage Tank 14 (ITS 14)	21,000	8.5 x 45	Steel	9,581,250	0.031	0.137	0.001	0.003			318.31	5.83	274.02	4	0.38	1.14	0.31	268.19	592.33
15E	Influent Storage Tank 15 (ITS 15)	21,000	8.5 x 45	Steel	9,581,250	0.031	0.137	0.001	0.003			318.31	5.83	274.02	4	0.38	1.14	0.31	268.19	592.33
16E	Influent Storage Tank 16 (ITS 16)	21,000	8.5 x 45	Steel	9,581,250	0.031	0.137	0.001	0.003			318.31	5.83	274.02	4	0.38	1.14	0.31	268.19	592.33
[illegible]	Weir Tank 1 (WT 1)	21,000	8.5 x 45	Steel	153,300,000	[illegible]	1.445	[illegible]	[illegible]	Closed top frac tank w/ internal weirs	Assuming 100,000ppm VOC (10%); RVP 6 plus BTEX (MW adjusted to 22)	3357.9	61.4	2890.61	42.16	3.96	11.98	3.3	2829.21	6248.51
[illegible]	Weir Tank 2 (WT 2)	21,000	8.5 x 45	Steel	153,300,000	0.330	1.445	0.007	0.031			3357.9	61.4	2890.61	42.16	3.96	11.98	3.3	2829.21	6248.51
19E	Settling Tank 1 (ST 1)	21,000	8.5 x 45	Steel	153,300,000	0.330	1.445	0.007	0.031	Closed top frac tanks used for settling	Assuming 100,000ppm VOC (10%); RVP 6 plus BTEX (MW adjusted to 22)	3357.9	61.4	2890.61	42.16	3.96	11.98	3.3	2829.21	6248.51
20E	Settling Tank 2 (ST 2)	21,000	8.5 x 45	Steel	153,300,000	0.330	1.445	0.007	0.031			3357.9	61.4	2890.61	42.16	3.96	11.98	3.3	2829.21	6248.51
21E	Settling Tank 3 (ST 3)	21,000	8.5 x 45	Steel	153,300,000	0.330	1.445	0.007	0.031			3357.9	61.4	2890.61	42.16	3.96	11.98	3.3	2829.21	6248.51
22E	Settling Tank 4 (ST 4)	21,000	8.5 x 45	Steel	153,300,000	0.330	1.445	0.007	0.031			3357.9	61.4	2890.61	42.16	3.96	11.98	3.3	2829.21	6248.51
23E	Settling Tank 5 (ST 5)	21,000	8.5 x 45	Steel	153,300,000	0.330	1.445	0.007	0.031			3357.9	61.4	2890.61	42.16	3.96	11.98	3.3	2829.21	6248.51
24E	Effluent Tank 1 (ET 1)	21,000	8.5 x 45	Steel	12,775,000	0.037	0.164	0.001	0.004	Effluent water storage, closed top frac tanks manifolded together; 1/12 of material goes through each tank	Assuming 100,000ppm VOC (10%); RVP 6 plus BTEX (MW adjusted to 22)	[illegible]	7.05	[illegible]	[illegible]	[illegible]	[illegible]	[illegible]	[illegible]	[illegible]
[illegible]	Effluent Tank 2 (ET 2)	21,000	8.5 x 45	Steel	12,775,000	0.037	0.164	[illegible]	0.004			[illegible]	7.05	[illegible]	[illegible]	[illegible]	[illegible]	[illegible]	[illegible]	[illegible]
26E	Effluent Tank 3 (ET 3)	21,000	8.5 x 45	Steel	12,775,000	0.037	0.164	0.001	0.004			[illegible]	7.05	[illegible]	4.83	[illegible]	[illegible]	0.38	[illegible]	[illegible]
[illegible]	Effluent Tank 4 (ET 4)	21,000	8.5 x 45	Steel	12,775,000	0.037	0.164	[illegible]	0.004			[illegible]	7.05	[illegible]	[illegible]	[illegible]	[illegible]	[illegible]	[illegible]	[illegible]
[illegible]	Effluent Tank 5 (ET 5)	21,000	8.5 x 45	Steel	12,775,000	0.037	0.164	0.001	0.004			[illegible]	7.05	[illegible]	[illegible]	[illegible]	[illegible]	[illegible]	[illegible]	[illegible]
[illegible]	Effluent Tank 6 (ET 6)	21,000	8.5 x 45	Steel	12,775,000	0.037	0.164	0.001	0.004			[illegible]	7.05	[illegible]	4.83	[illegible]	[illegible]	[illegible]	[illegible]	[illegible]
30E	Effluent Tank 7 (ET 7)	21,000	8.5 x 45	Steel	12,775,000	0.037	0.164	0.001	0.004			[illegible]	7.05	[illegible]	4.83	[illegible]	[illegible]	[illegible]	[illegible]	[illegible]
[illegible]	Effluent Tank 8 (ET 8)	21,000	8.5 x 45	Steel	12,775,000	0.037	0.164	[illegible]	0.004			[illegible]	7.05	[illegible]	[illegible]	[illegible]	[illegible]	[illegible]	[illegible]	[illegible]
[illegible]	Effluent Tank 9 (ET 9)	21,000	8.5 x 45	Steel	12,775,000	0.037	0.164	[illegible]	[illegible]			[illegible]	7.05	[illegible]	[illegible]	0.46	[illegible]	[illegible]	[illegible]	[illegible]
[illegible]	Effluent Tank 10 (ET 10)	21,000	8.5 x 45	Steel	12,775,000	0.037	0.164	[illegible]	[illegible]			[illegible]	[illegible]	[illegible]	[illegible]	[illegible]	[illegible]	[illegible]	[illegible]	[illegible]
[illegible]	Effluent Tank 11 (ET 11)	21,000	8.5 x 45	Steel	12,775,000	[illegible]	0.164	[illegible]	0.004			[illegible]	[illegible]	[illegible]	[illegible]	[illegible]	[illegible]	[illegible]	[illegible]	[illegible]
[illegible]	Effluent Tank 12 (ET 12)	21,000	[illegible]	Steel	12,775,000	[illegible]	0.164	0.001	[illegible]			[illegible]	7.05	[illegible]	[illegible]	[illegible]	[illegible]	[illegible]	[illegible]	[illegible]
36E	Sludge Influent Tank 1 (SI1)	21,000	8.5 x 45	Steel	15,069,390	0.043	0.187	0.001	0.004	Closed top frac tank to feed press	Assuming 100,000ppm VOC (10%); RVP 6 plus BTEX (MW adjusted to 22)	434.38	7.94	373.93	5.45	0.51	1.55	0.43	365.99	808.31
37E	Sludge Influent Tank 2 (SI2)	21,000	8.5 x 45	Steel	15,069,390	0.043	0.187	0.001	0.004			434.38	7.94	373.93	5.45	0.51	1.55	0.43	365.99	808.31
38E	Filtrate Water 1 (F1)	21,000	8.5 x 45	Steel	[illegible]	[illegible]	[illegible]	[illegible]	[illegible]	Closed top frac tank containing press filtrate	Assuming 100,000ppm VOC (10%); RVP 6 plus BTEX (MW adjusted to 22)	[illegible]	5.62	[illegible]	3.85	[illegible]	[illegible]	[illegible]	[illegible]	[illegible]
39E	Brine Mixing Tank 1 (BM1)	[illegible]	[illegible]	Steel	260,000	0.002	0.009	0.00004	0.0002	Open top tank received as 3/0 with pressure	Assuming 100,000ppm VOC (10%); RVP 6 plus BTEX (MW adjusted to 22)	20	0.37	18.11	[illegible]	0.02	[illegible]	[illegible]	[illegible]	[illegible]
40E - Water Loadout (WL-1)						[illegible]	[illegible]	[illegible]	[illegible]	(see "Water Loadout" tab)										
41E - Water Loadin (WL-2)						[illegible]	[illegible]	[illegible]	[illegible]	(see "Water Loadin" tab)										
32E - Sludge Loadout (SL-1)						[illegible]	[illegible]	[illegible]	[illegible]	(see "Sludge Loadout" tab)										

VOC emissions lb/hr	VOC emissions ton/yr	HAP emissions lb/hr	HAP emissions ton/yr
4.880	21.372	0.104	0.455

	B	T	E	X
	4	0.38	1.14	0.31
lb/hr	0.000	0.000	0.000	0.000
ton/yr	0.002	0.000	0.001	0.000

	B	T	E	X
	[illegible]	[illegible]	[illegible]	[illegible]
lb/hr	0.005	0.000	0.001	0.000
ton/yr	0.021	0.002	0.006	0.002

	B	T	E	X	
	[illegible]	[illegible]	[illegible]	0.38	[illegible]
lb/hr	0.001	0.000	0.000	0.000	
ton/yr	0.002	0.000	0.001	0.000	

	B	T	E	X
	5.45	0.51	1.55	0.43
lb/hr	0.001	0.000	0.000	0.000
ton/yr	0.003	0.000	0.001	0.000
	3.85	[illegible]	[illegible]	[illegible]
lb/hr	0.0004	0.0000	0.0001	0.0000
ton/yr	0.0019	0.0002	0.0006	0.0002
	[illegible]	[illegible]	[illegible]	[illegible]
	[illegible]	[illegible]	[illegible]	[illegible]
lb/hr	0.0000	0.0000	0.0000	0.0000
ton/yr	0.0001	0.0000	0.0000	0.0000

Water Loadout (W-1) Calculations

Assumptions: Based on January- 100,000 ppm (10%) mass fraction of emissions **(lb)**
Based on 420,000 gal/day
Used TANKS data for speciation

Equation: 12.46 SPM/T

6/6/2016

Emissions from ET - TANKS Calculation			W-1 Emissions based on Loadout	
lbs/year	%total		lb/day	ton/year
719.79	1.0000	TOTAL	38.25	6.98
4.83	0.0067	**Benzene**	0.26	0.05
0.46	0.0006	**Ethylbenzene**	0.02	0.004
320.83	0.4457	**Gasoline**	17.05	3.11
1.38	0.0019	**Toluene**	0.07	0.01
391.91	0.5445	**Water**	20.83	3.80
0.38	0.0005	**Xylene**	0.02	0.002
		HAPS	**0.375**	**0.067** **HAPS Loadout Emissions in Tons/YR**
		VOCs	**17.424**	**3.178** **VOCs Loadout Emissions in Tons/YR**

Variable	Value	Unit	
T	517.22	R	Liquid Bulk Temperature from TANKS
M	22	lb/lb - mole	Molecular Weight from TANKS
P	0.2864	psia	At Liquid Bulk Temperature from TANKS
S	0.6	saturation factor	

0.09 lb/10^3 gal
38.25 lb/day based on 10,000 bbl / day
6.98 ton/yr
Total Emissions

Water Loadin (W-2) Calculations

Assumptions: Based on January- 100,000 ppm (10%) mass fraction of emissions (lb)
Based on 420,000 gal/day
Used TANKS data for speciation

Equation: 12.46 SPM/T

6/6/2016

Emissions from ET - TANKS Calculation			W-2 Emissions based on Loadout	
lbs/year	%total		lb/day	ton/year
719.79	1.0000	TOTAL	38.25	6.98
4.83	0.0067	**Benzene**	0.26	0.05
0.46	0.0006	**Ethylbenzene**	0.02	0.004
320.83	0.4457	**Gasoline**	17.05	3.11
1.38	0.0019	**Toluene**	0.07	0.01
391.91	0.5445	**Water**	20.83	3.80
0.38	0.0005	**Xylene**	0.02	0.002
		HAPS	**0.375**	**0.067** **HAPS Loadout Emissions in Tons/YR**
		VOCs	**17.424**	**3.178** **VOCs Loadout Emissions in Tons/YR**

Variable	Value	Unit	
T	517.22	R	Liquid Bulk Temperature from TANKS
M	22	lb/lb - mole	Molecular Weight from TANKS
P	0.2864	psia	At Liquid Bulk Temperature from TANKS
S	0.6	saturation factor	

0.09 lb/10^3 gal
38.25 lb/day based on 10,000 bbl / day
6.98 ton/yr
Total Emissions

Sludge Loadout (SL-1) Calculations

6/6/2016

Assumptions: Based on January -100,000ppm mass fraction of emissions (lb); 700bbl/day of sludge
700 bbl of sludge per day @ 60% moisture. Liquid assumed to be 100,000ppm VOC.
700 bbl based on proposed process water balance of 70bbl of sludge per 1000bbl of influent.

Emissions from ET - TANKS Calculation			W-1 Emissions based on Loadout	
lbs/year	%total		lb/day	ton/year
719.79	1.0000	TOTAL	2.68	0.49
4.83	0.0067	**Benzene**	0.02	0.00
0.46	0.0006	**Ethylene**	0.00	0.000
320.83	0.4457	**Gasoline**	1.19	0.22
1.38	0.0019	**Toluene**	0.01	0.00
391.91	0.5445	**Water**	1.46	0.27
0.38	0.0005	**Xylene**	0.00	0.002
		HAPS	**0.026**	**0.007**
		VOCs	**1.220**	**0.224**

Equation: 12.46 SPM/T

Variable	Value	Unit	
T	517.22	R	Liquid Bulk Temperature from TANKS
M	22	lb/lb - mole	Molecular Weight from TANKS
P	0.2864	psia	At Liquid Bulk Temperature from TANKS
S	0.6	saturation factor	

0.09 lb/10^3 gal

2.68 lb/day based on 700 **bbl** / day

0.49 ton/yr

Total Emissions

Attachment L
EMISSIONS UNIT DATA SHEET
STORAGE TANKS

Provide the following information for each new or modified bulk liquid storage tank as shown on the *Equipment List Form* and other parts of this application. A tank is considered modified if the material to be stored in the tank is different from the existing stored liquid.

IF USING US EPA'S TANKS EMISSION ESTIMATION PROGRAM (AVAILABLE AT **www.epa.gov/tnn/tanks.html**), APPLICANT MAY ATTACH THE SUMMARY SHEETS IN LIEU OF COMPLETING SECTIONS III, IV, & V OF THIS FORM. HOWEVER, SECTIONS I, II, AND VI OF THIS FORM MUST BE COMPLETED. US EPA'S AP-42, SECTION 7.1, "ORGANIC LIQUID STORAGE TANKS," MAY ALSO BE USED TO ESTIMATE VOC AND HAP EMISSIONS (**http://www.epa.gov/tnn/chief/**).

I. GENERAL INFORMATION (required)

1. Bulk Storage Area Name N/A	2. Tank Name Influent Storage Tanks #1-#16
3. Tank Equipment Identification No. (as assigned on *Equipment List Form*) IST1 - IST16	4. Emission Point Identification No. (as assigned on *Equipment List Form*) 1E - 16E
5. Date of Commencement of Construction (for existing tanks) N/A	
6. Type of change ☒ New Construction ☐ New Stored Material ☐ Other Tank Modification	
7. Description of Tank Modification (if applicable) N/A	
7A. Does the tank have more than one mode of operation? (e.g. Is there more than one product stored in the tank?) ☐ Yes ☒ No	
7B. If YES, explain and identify which mode is covered by this application (Note: A separate form must be completed for each mode).	
7C. Provide any limitations on source operation affecting emissions, any work practice standards (e.g. production variation, etc.): None	

II. TANK INFORMATION (required)

8. Design Capacity (specify barrels or gallons). Use the internal cross-sectional area multiplied by internal height. 21,000 gallons each	
9A. Tank Internal Diameter (ft) 8.5 (Height) x 8 (Width) - Rectangular Tank	9B. Tank Internal Height (or Length) (ft) Length: 45
10A. Maximum Liquid Height (ft) ~8	10B. Average Liquid Height (ft) ~6.5
11A. Maximum Vapor Space Height (ft) ~0.5	11B. Average Vapor Space Height (ft) ~2
12. Nominal Capacity (specify barrels or gallons). This is also known as "working volume" and considers design liquid levels and overflow valve heights. ~17,000 gallons each	

13A. Maximum annual throughput (gal/yr)	13B. Maximum daily throughput (gal/day)
9581250 each	26250 each

14. Number of Turnovers per year (annual net throughput/maximum tank liquid volume): 564 each

15. Maximum tank fill rate (gal/min): 18.2 each

16. Tank fill method: ☒ Submerged ☐ Splash ☒ Bottom Loading

17. Complete 17A and 17B for Variable Vapor Space Tank Systems ☒ Does Not Apply

17A. Volume Expansion Capacity of System (gal)	17B. Number of transfers into system per year

18. Type of tank (check all that apply):

☒ Fixed Roof ___ vertical X horizontal X flat roof ___ cone roof ___ dome roof ___ other (describe)

☐ External Floating Roof ___ pontoon roof ___ double deck roof

☐ Domed External (or Covered) Floating Roof

☐ Internal Floating Roof ___ vertical column support ___ self-supporting

☐ Variable Vapor Space ___ lifter roof ___ diaphragm

☐ Pressurized ___ spherical ___ cylindrical

☐ Underground

☐ Other (describe)

III. TANK CONSTRUCTION & OPERATION INFORMATION (optional if providing TANKS Summary Sheets)

19. Tank Shell Construction:

☐ Riveted ☐ Gunite lined ☐ Epoxy-coated rivets ☐ Other (describe)

20A. Shell Color	20B. Roof Color	20C. Year Last Painted

21. Shell Condition (if metal and unlined):

☐ No Rust ☐ Light Rust ☐ Dense Rust ☐ Not applicable

22A. Is the tank heated? ☐ YES ☐ NO

22B. If YES, provide the operating temperature (°F)

22C. If YES, please describe how heat is provided to tank.

23. Operating Pressure Range (psig): atmospheric to

24. Complete the following section for **Vertical Fixed Roof Tanks** ☐ Does Not Apply

24A. For dome roof, provide roof radius (ft)

24B. For cone roof, provide slope (ft/ft)

25. Complete the following section for **Floating Roof Tanks** ☐ Does Not Apply

25A. Year Internal Floaters Installed:

25B. Primary Seal Type: (check one) ☐ Metallic (Mechanical) Shoe Seal ☐ Liquid Mounted Resilient Seal ☐ Vapor Mounted Resilient Seal ☐ Other (describe):

25C. Is the Floating Roof equipped with a Secondary Seal? ☐ YES ☐ NO

25D. If YES, how is the secondary seal mounted? (check one) ☐ Shoe ☐ Rim ☐ Other (describe):

25E. Is the Floating Roof equipped with a weather shield? ☐ YES ☐ NO

25F. Describe deck fittings; indicate the number of each type of fitting:		
ACCESS HATCH		
BOLT COVER, GASKETED:	UNBOLTED COVER, GASKETED:	UNBOLTED COVER, UNGASKETED:
AUTOMATIC GAUGE FLOAT WELL		
BOLT COVER, GASKETED:	UNBOLTED COVER, GASKETED:	UNBOLTED COVER, UNGASKETED:
COLUMN WELL		
BUILT-UP COLUMN – SLIDING COVER, GASKETED:	BUILT-UP COLUMN – SLIDING COVER, UNGASKETED:	PIPE COLUMN – FLEXIBLE FABRIC SLEEVE SEAL:
LADDER WELL		
PIP COLUMN – SLIDING COVER, GASKETED:	PIPE COLUMN – SLIDING COVER, UNGASKETED:	
GAUGE-HATCH/SAMPLE PORT		
SLIDING COVER, GASKETED:	SLIDING COVER, UNGASKETED:	
ROOF LEG OR HANGER WELL		
WEIGHTED MECHANICAL ACTUATION, GASKETED:	WEIGHTED MECHANICAL ACTUATION, UNGASKETED:	SAMPLE WELL-SLIT FABRIC SEAL (10% OPEN AREA)
VACUUM BREAKER		
WEIGHTED MECHANICAL ACTUATION, GASKETED:	WEIGHTED MECHANICAL ACTUATION, UNGASKETED:	
RIM VENT		
WEIGHTED MECHANICAL ACTUATION GASKETED:	WEIGHTED MECHANICAL ACTUATION, UNGASKETED:	
DECK DRAIN (3-INCH DIAMETER)		
OPEN:	90% CLOSED:	
STUB DRAIN		
1-INCH DIAMETER:		
OTHER (DESCRIBE, ATTACH ADDITIONAL PAGES IF NECESSARY)		

26. Complete the following section for Internal Floating Roof Tanks ☐ Does Not Apply	
26A. Deck Type: ☐ Bolted ☐ Welded	
26B. For Bolted decks, provide deck construction:	
26C. Deck seam: ☐ Continuous sheet construction 5 feet wide ☐ Continuous sheet construction 6 feet wide ☐ Continuous sheet construction 7 feet wide ☐ Continuous sheet construction 5 × 7.5 feet wide ☐ Continuous sheet construction 5 × 12 feet wide ☐ Other (describe)	
26D. Deck seam length (ft)	26E. Area of deck (ft^2)
For column supported tanks: 26F. Number of columns:	26G. Diameter of each column:

IV. SITE INFORMANTION (optional if providing TANKS Summary Sheets)

27. Provide the city and state on which the data in this section are based.
28. Daily Average Ambient Temperature (°F)
29. Annual Average Maximum Temperature (°F)
30. Annual Average Minimum Temperature (°F)
31. Average Wind Speed (miles/hr)
32. Annual Average Solar Insulation Factor (BTU/(ft^2·day))
33. Atmospheric Pressure (psia)

V. LIQUID INFORMATION (optional if providing TANKS Summary Sheets)

34. Average daily temperature range of bulk liquid:	
34A. Minimum (°F)	34B. Maximum (°F)
35. Average operating pressure range of tank:	
35A. Minimum (psig)	35B. Maximum (psig)
36A. Minimum Liquid Surface Temperature (°F)	36B. Corresponding Vapor Pressure (psia)
37A. Average Liquid Surface Temperature (°F)	37B. Corresponding Vapor Pressure (psia)
38A. Maximum Liquid Surface Temperature (°F)	38B. Corresponding Vapor Pressure (psia)

39. Provide the following for <u>each</u> liquid or gas to be stored in tank. Add additional pages if necessary.

39A.	Material Name or Composition			
39B.	CAS Number			
39C.	Liquid Density (lb/gal)			
39D.	Liquid Molecular Weight (lb/lb-mole)			
39E.	Vapor Molecular Weight (lb/lb-mole)			

Maximum Vapor Pressure 39F. True (psia) 39G. Reid (psia)			
Months Storage per Year 39H. From 39I. To			

VI. EMISSIONS AND CONTROL DEVICE DATA (required)

40. Emission Control Devices (check as many as apply): ☐ Does Not Apply

- ☐ Carbon Adsorption[1]
- ☐ Condenser[1]
- ☒ Conservation Vent (psig)
  - Vacuum Setting 0.03 Pressure Setting 0.03
- ☐ Emergency Relief Valve (psig)
- ☐ Inert Gas Blanket of
- ☐ Insulation of Tank with
- ☐ Liquid Absorption (scrubber)[1]
- ☐ Refrigeration of Tank
- ☐ Rupture Disc (psig)
- ☐ Vent to Incinerator[1]
- ☐ Other[1] (describe):

[1] Complete appropriate Air Pollution Control Device Sheet.

41. Expected Emission Rate (submit Test Data or Calculations here or elsewhere in the application).

Material Name & CAS No.	Breathing Loss (lb/hr)	Working Loss Amount	Working Loss Units	Annual Loss (lb/yr)	Estimation Method[1]
VOCs as RVP				4834.32	O, TANKS (combined total for IST1-16)
Benzene				64.00	O, TANKS (combined total for IST1-16)
Toluene				18.24	O, TANKS (combined total for IST1-16)
Ethylbenzene				6.08	O, TANKS (combined total for IST1-16)
Xylene				4.96	O, TANKS (combined total for IST1-16)

[1] EPA = EPA Emission Factor, MB = Material Balance, SS = Similar Source, ST = Similar Source Test, Throughput Data, O = Other (specify)

☒ Remember to attach emissions calculations, including TANKS Summary Sheets if applicable.

Attachment L
EMISSIONS UNIT DATA SHEET
STORAGE TANKS

Provide the following information for each new or modified bulk liquid storage tank as shown on the *Equipment List Form* and other parts of this application. A tank is considered modified if the material to be stored in the tank is different from the existing stored liquid.

IF USING US EPA'S TANKS EMISSION ESTIMATION PROGRAM (AVAILABLE AT **www.epa.gov/tnn/tanks.html**), APPLICANT MAY ATTACH THE SUMMARY SHEETS IN LIEU OF COMPLETING SECTIONS III, IV, & V OF THIS FORM. HOWEVER, SECTIONS I, II, AND VI OF THIS FORM MUST BE COMPLETED. US EPA'S AP-42, SECTION 7.1, "ORGANIC LIQUID STORAGE TANKS," MAY ALSO BE USED TO ESTIMATE VOC AND HAP EMISSIONS (**http://www.epa.gov/tnn/chief/**).

I. GENERAL INFORMATION (required)

1. Bulk Storage Area Name N/A	2. Tank Name Weir Tanks #1 & #2
3. Tank Equipment Identification No. (as assigned on *Equipment List Form*) WT 1 & WT2	4. Emission Point Identification No. (as assigned on *Equipment List Form*) 17E & 18E
5. Date of Commencement of Construction (for existing tanks) N/A	
6. Type of change ☒ New Construction ☐ New Stored Material ☐ Other Tank Modification	
7. Description of Tank Modification (if applicable) N/A	
7A. Does the tank have more than one mode of operation? (e.g. Is there more than one product stored in the tank?) ☐ Yes ☒ No	
7B. If YES, explain and identify which mode is covered by this application (Note: A separate form must be completed for each mode).	
7C. Provide any limitations on source operation affecting emissions, any work practice standards (e.g. production variation, etc.): None	

II. TANK INFORMATION (required)

8. Design Capacity (specify barrels or gallons). Use the internal cross-sectional area multiplied by internal height. 21,000 gallons each	
9A. Tank Internal Diameter (ft) 8.5 (Height) x 8 (Width) - Rectangular Tank	9B. Tank Internal Height (or Length) (ft) Length: 45
10A. Maximum Liquid Height (ft) ~8	10B. Average Liquid Height (ft) ~6.5
11A. Maximum Vapor Space Height (ft) ~0.5	11B. Average Vapor Space Height (ft) ~2
12. Nominal Capacity (specify barrels or gallons). This is also known as "working volume" and considers design liquid levels and overflow valve heights. ~17,000 gallons each	

13A. Maximum annual throughput (gal/yr)	13B. Maximum daily throughput (gal/day)
153300000 each	420000 each

14. Number of Turnovers per year (annual net throughput/maximum tank liquid volume): 9018 each

15. Maximum tank fill rate (gal/min): 292 each

16. Tank fill method: ☐ Submerged ☐ Splash ☒ Bottom Loading

17. Complete 17A and 17B for Variable Vapor Space Tank Systems ☒ Does Not Apply

17A. Volume Expansion Capacity of System (gal)	17B. Number of transfers into system per year

18. Type of tank (check all that apply):

☒ Fixed Roof ___ vertical X horizontal X flat roof ___ cone roof ___ dome roof ___ other (describe)

☐ External Floating Roof ___ pontoon roof ___ double deck roof

☐ Domed External (or Covered) Floating Roof

☐ Internal Floating Roof ___ vertical column support ___ self-supporting

☐ Variable Vapor Space ___ lifter roof ___ diaphragm

☐ Pressurized ___ spherical ___ cylindrical

☐ Underground

☐ Other (describe)

III. TANK CONSTRUCTION & OPERATION INFORMATION (optional if providing TANKS Summary Sheets)

19. Tank Shell Construction:

☐ Riveted ☐ Gunite lined ☐ Epoxy-coated rivets ☐ Other (describe)

20A. Shell Color	20B. Roof Color	20C. Year Last Painted

21. Shell Condition (if metal and unlined):

☐ No Rust ☐ Light Rust ☐ Dense Rust ☐ Not applicable

22A. Is the tank heated? ☐ YES ☐ NO

22B. If YES, provide the operating temperature (°F)

22C. If YES, please describe how heat is provided to tank.

23. Operating Pressure Range (psig): atmospheric to

24. Complete the following section for **Vertical Fixed Roof Tanks** ☐ Does Not Apply

24A. For dome roof, provide roof radius (ft)

24B. For cone roof, provide slope (ft/ft)

25. Complete the following section for **Floating Roof Tanks** ☐ Does Not Apply

25A. Year Internal Floaters Installed:

25B. Primary Seal Type: (check one) ☐ Metallic (Mechanical) Shoe Seal ☐ Liquid Mounted Resilient Seal ☐ Vapor Mounted Resilient Seal ☐ Other (describe):

25C. Is the Floating Roof equipped with a Secondary Seal? ☐ YES ☐ NO

25D. If YES, how is the secondary seal mounted? (check one) ☐ Shoe ☐ Rim ☐ Other (describe):

25E. Is the Floating Roof equipped with a weather shield? ☐ YES ☐ NO

25F. Describe deck fittings; indicate the number of each type of fitting:		
ACCESS HATCH		
BOLT COVER, GASKETED:	UNBOLTED COVER, GASKETED:	UNBOLTED COVER, UNGASKETED:
AUTOMATIC GAUGE FLOAT WELL		
BOLT COVER, GASKETED:	UNBOLTED COVER, GASKETED:	UNBOLTED COVER, UNGASKETED:
COLUMN WELL		
BUILT-UP COLUMN – SLIDING COVER, GASKETED:	BUILT-UP COLUMN – SLIDING COVER, UNGASKETED:	PIPE COLUMN – FLEXIBLE FABRIC SLEEVE SEAL:
LADDER WELL		
PIP COLUMN – SLIDING COVER, GASKETED:	PIPE COLUMN – SLIDING COVER, UNGASKETED:	
GAUGE-HATCH/SAMPLE PORT		
SLIDING COVER, GASKETED:	SLIDING COVER, UNGASKETED:	
ROOF LEG OR HANGER WELL		
WEIGHTED MECHANICAL ACTUATION, GASKETED:	WEIGHTED MECHANICAL ACTUATION, UNGASKETED:	SAMPLE WELL-SLIT FABRIC SEAL (10% OPEN AREA)
VACUUM BREAKER		
WEIGHTED MECHANICAL ACTUATION, GASKETED:	WEIGHTED MECHANICAL ACTUATION, UNGASKETED:	
RIM VENT		
WEIGHTED MECHANICAL ACTUATION GASKETED:	WEIGHTED MECHANICAL ACTUATION, UNGASKETED:	
DECK DRAIN (3-INCH DIAMETER)		
OPEN:	90% CLOSED:	
STUB DRAIN		
1-INCH DIAMETER:		
OTHER (DESCRIBE, ATTACH ADDITIONAL PAGES IF NECESSARY)		

26. Complete the following section for Internal Floating Roof Tanks ☐ Does Not Apply		
26A. Deck Type: ☐ Bolted ☐ Welded		
26B. For Bolted decks, provide deck construction:		
26C. Deck seam: ☐ Continuous sheet construction 5 feet wide ☐ Continuous sheet construction 6 feet wide ☐ Continuous sheet construction 7 feet wide ☐ Continuous sheet construction 5 × 7.5 feet wide ☐ Continuous sheet construction 5 × 12 feet wide ☐ Other (describe)		
26D. Deck seam length (ft)	26E. Area of deck (ft^2)	
For column supported tanks: 26F. Number of columns:	26G. Diameter of each column:	

IV. SITE INFORMANTION (optional if providing TANKS Summary Sheets)

27. Provide the city and state on which the data in this section are based.
28. Daily Average Ambient Temperature (°F)
29. Annual Average Maximum Temperature (°F)
30. Annual Average Minimum Temperature (°F)
31. Average Wind Speed (miles/hr)
32. Annual Average Solar Insulation Factor (BTU/(ft^2·day))
33. Atmospheric Pressure (psia)

V. LIQUID INFORMATION (optional if providing TANKS Summary Sheets)

34. Average daily temperature range of bulk liquid:			
34A. Minimum (°F)		34B. Maximum (°F)	
35. Average operating pressure range of tank:			
35A. Minimum (psig)		35B. Maximum (psig)	
36A. Minimum Liquid Surface Temperature (°F)		36B. Corresponding Vapor Pressure (psia)	
37A. Average Liquid Surface Temperature (°F)		37B. Corresponding Vapor Pressure (psia)	
38A. Maximum Liquid Surface Temperature (°F)		38B. Corresponding Vapor Pressure (psia)	
39. Provide the following for <u>each</u> liquid or gas to be stored in tank. Add additional pages if necessary.			
39A. Material Name or Composition			
39B. CAS Number			
39C. Liquid Density (lb/gal)			
39D. Liquid Molecular Weight (lb/lb-mole)			
39E. Vapor Molecular Weight (lb/lb-mole)			

Maximum Vapor Pressure 39F. True (psia) 39G. Reid (psia)			
Months Storage per Year 39H. From 39I. To			

VI. EMISSIONS AND CONTROL DEVICE DATA (required)

40. Emission Control Devices (check as many as apply): ☐ Does Not Apply

- ☐ Carbon Adsorption[1]
- ☐ Condenser[1]
- ☒ Conservation Vent (psig)
  - Vacuum Setting 0.03 Pressure Setting 0.03
- ☐ Emergency Relief Valve (psig)
- ☐ Inert Gas Blanket of
- ☐ Insulation of Tank with
- ☐ Liquid Absorption (scrubber)[1]
- ☐ Refrigeration of Tank
- ☐ Rupture Disc (psig)
- ☐ Vent to Incinerator[1]
- ☐ Other[1] (describe):

[1] Complete appropriate Air Pollution Control Device Sheet.

41. Expected Emission Rate (submit Test Data or Calculations here or elsewhere in the application).

Material Name & CAS No.	Breathing Loss (lb/hr)	Working Loss Amount	Working Loss Units	Annual Loss (lb/yr)	Estimation Method[1]
VOCs as RVP				5781.22	O, TANKS (combined total for WT1 & WT2)
Benzene				84.32	O, TANKS (combined total for WT1 & WT2)
Toluene				23.96	O, TANKS (combined total for WT1 & WT2)
Ethylbenzene				7.92	O, TANKS (combined total for WT1 & WT2)
Xylene				6.6	O, TANKS (combined total for WT1 & WT2)

[1] EPA = EPA Emission Factor, MB = Material Balance, SS = Similar Source, ST = Similar Source Test, Throughput Data, O = Other (specify)

☒ Remember to attach emissions calculations, including TANKS Summary Sheets if applicable.

Attachment L
EMISSIONS UNIT DATA SHEET
STORAGE TANKS

Provide the following information for each new or modified bulk liquid storage tank as shown on the *Equipment List Form* and other parts of this application. A tank is considered modified if the material to be stored in the tank is different from the existing stored liquid.

IF USING US EPA'S TANKS EMISSION ESTIMATION PROGRAM (AVAILABLE AT www.epa.gov/tnn/tanks.html), APPLICANT MAY ATTACH THE SUMMARY SHEETS IN LIEU OF COMPLETING SECTIONS III, IV, & V OF THIS FORM. HOWEVER, SECTIONS I, II, AND VI OF THIS FORM MUST BE COMPLETED. US EPA'S AP-42, SECTION 7.1, "ORGANIC LIQUID STORAGE TANKS," MAY ALSO BE USED TO ESTIMATE VOC AND HAP EMISSIONS (http://www.epa.gov/tnn/chief/).

I. GENERAL INFORMATION (required)

1. Bulk Storage Area Name N/A	2. Tank Name Settling Tanks #1 - #5
3. Tank Equipment Identification No. (as assigned on *Equipment List Form*) ST1 - ST5	4. Emission Point Identification No. (as assigned on *Equipment List Form*) 19E - 23E
5. Date of Commencement of Construction (for existing tanks) N/A	
6. Type of change ☒ New Construction ☐ New Stored Material ☐ Other Tank Modification	
7. Description of Tank Modification (if applicable) N/A	
7A. Does the tank have more than one mode of operation? (e.g. Is there more than one product stored in the tank?) ☐ Yes ☒ No	
7B. If YES, explain and identify which mode is covered by this application (Note: A separate form must be completed for each mode).	
7C. Provide any limitations on source operation affecting emissions, any work practice standards (e.g. production variation, etc.): None	

II. TANK INFORMATION (required)

8. Design Capacity (specify barrels or gallons). Use the internal cross-sectional area multiplied by internal height. 21,000 gallons each	
9A. Tank Internal Diameter (ft) 8.5 (Height) x 8 (Width) - Rectangular Tank	9B. Tank Internal Height (or Length) (ft) Length: 45
10A. Maximum Liquid Height (ft) ~8	10B. Average Liquid Height (ft) ~6.5
11A. Maximum Vapor Space Height (ft) ~0.5	11B. Average Vapor Space Height (ft) ~2
12. Nominal Capacity (specify barrels or gallons). This is also known as "working volume" and considers design liquid levels and overflow valve heights. ~17,000 gallons each	

13A. Maximum annual throughput (gal/yr)	13B. Maximum daily throughput (gal/day)
153300000 each	420000 each

14. Number of Turnovers per year (annual net throughput/maximum tank liquid volume): 9018 each

15. Maximum tank fill rate (gal/min): 292 each

16. Tank fill method: ☐ Submerged ☐ Splash ☒ Bottom Loading

17. Complete 17A and 17B for Variable Vapor Space Tank Systems ☒ Does Not Apply

17A. Volume Expansion Capacity of System (gal)	17B. Number of transfers into system per year

18. Type of tank (check all that apply):

☒ Fixed Roof ___ vertical X horizontal X flat roof ___ cone roof ___ dome roof ___ other (describe)

☐ External Floating Roof ___ pontoon roof ___ double deck roof

☐ Domed External (or Covered) Floating Roof

☐ Internal Floating Roof ___ vertical column support ___ self-supporting

☐ Variable Vapor Space ___ lifter roof ___ diaphragm

☐ Pressurized ___ spherical ___ cylindrical

☐ Underground

☐ Other (describe)

III. TANK CONSTRUCTION & OPERATION INFORMATION (optional if providing TANKS Summary Sheets)

19. Tank Shell Construction:

☐ Riveted ☐ Gunite lined ☐ Epoxy-coated rivets ☐ Other (describe)

20A. Shell Color	20B. Roof Color	20C. Year Last Painted

21. Shell Condition (if metal and unlined):

☐ No Rust ☐ Light Rust ☐ Dense Rust ☐ Not applicable

22A. Is the tank heated? ☐ YES ☐ NO

22B. If YES, provide the operating temperature (°F)

22C. If YES, please describe how heat is provided to tank.

23. Operating Pressure Range (psig): atmospheric to

24. Complete the following section for **Vertical Fixed Roof Tanks** ☐ Does Not Apply

24A. For dome roof, provide roof radius (ft)

24B. For cone roof, provide slope (ft/ft)

25. Complete the following section for **Floating Roof Tanks** ☐ Does Not Apply

25A. Year Internal Floaters Installed:

25B. Primary Seal Type: (check one) ☐ Metallic (Mechanical) Shoe Seal ☐ Liquid Mounted Resilient Seal ☐ Vapor Mounted Resilient Seal ☐ Other (describe):

25C. Is the Floating Roof equipped with a Secondary Seal? ☐ YES ☐ NO

25D. If YES, how is the secondary seal mounted? (check one) ☐ Shoe ☐ Rim ☐ Other (describe):

25E. Is the Floating Roof equipped with a weather shield? ☐ YES ☐ NO

25F. Describe deck fittings; indicate the number of each type of fitting:		
ACCESS HATCH		
BOLT COVER, GASKETED:	UNBOLTED COVER, GASKETED:	UNBOLTED COVER, UNGASKETED:
AUTOMATIC GAUGE FLOAT WELL		
BOLT COVER, GASKETED:	UNBOLTED COVER, GASKETED:	UNBOLTED COVER, UNGASKETED:
COLUMN WELL		
BUILT-UP COLUMN – SLIDING COVER, GASKETED:	BUILT-UP COLUMN – SLIDING COVER, UNGASKETED:	PIPE COLUMN – FLEXIBLE FABRIC SLEEVE SEAL:
LADDER WELL		
PIP COLUMN – SLIDING COVER, GASKETED:	PIPE COLUMN – SLIDING COVER, UNGASKETED:	
GAUGE-HATCH/SAMPLE PORT		
SLIDING COVER, GASKETED:	SLIDING COVER, UNGASKETED:	
ROOF LEG OR HANGER WELL		
WEIGHTED MECHANICAL ACTUATION, GASKETED:	WEIGHTED MECHANICAL ACTUATION, UNGASKETED:	SAMPLE WELL-SLIT FABRIC SEAL (10% OPEN AREA)
VACUUM BREAKER		
WEIGHTED MECHANICAL ACTUATION, GASKETED:	WEIGHTED MECHANICAL ACTUATION, UNGASKETED:	
RIM VENT		
WEIGHTED MECHANICAL ACTUATION GASKETED:	WEIGHTED MECHANICAL ACTUATION, UNGASKETED:	
DECK DRAIN (3-INCH DIAMETER)		
OPEN:	90% CLOSED:	
STUB DRAIN		
1-INCH DIAMETER:		
OTHER (DESCRIBE, ATTACH ADDITIONAL PAGES IF NECESSARY)		

26. Complete the following section for Internal Floating Roof Tanks ☐ Does Not Apply			
26A. Deck Type: ☐ Bolted ☐ Welded			
26B. For Bolted decks, provide deck construction:			
26C. Deck seam: ☐ Continuous sheet construction 5 feet wide ☐ Continuous sheet construction 6 feet wide ☐ Continuous sheet construction 7 feet wide ☐ Continuous sheet construction 5 × 7.5 feet wide ☐ Continuous sheet construction 5 × 12 feet wide ☐ Other (describe)			
26D. Deck seam length (ft)		26E. Area of deck (ft^2)	
For column supported tanks: 26F. Number of columns:		26G. Diameter of each column:	

IV. SITE INFORMANTION (optional if providing TANKS Summary Sheets)

27. Provide the city and state on which the data in this section are based.
28. Daily Average Ambient Temperature (°F)
29. Annual Average Maximum Temperature (°F)
30. Annual Average Minimum Temperature (°F)
31. Average Wind Speed (miles/hr)
32. Annual Average Solar Insulation Factor (BTU/(ft^2·day))
33. Atmospheric Pressure (psia)

V. LIQUID INFORMATION (optional if providing TANKS Summary Sheets)

34. Average daily temperature range of bulk liquid:			
34A. Minimum (°F)		34B. Maximum (°F)	
35. Average operating pressure range of tank:			
35A. Minimum (psig)		35B. Maximum (psig)	
36A. Minimum Liquid Surface Temperature (°F)		36B. Corresponding Vapor Pressure (psia)	
37A. Average Liquid Surface Temperature (°F)		37B. Corresponding Vapor Pressure (psia)	
38A. Maximum Liquid Surface Temperature (°F)		38B. Corresponding Vapor Pressure (psia)	
39. Provide the following for <u>each</u> liquid or gas to be stored in tank. Add additional pages if necessary.			
39A. Material Name or Composition			
39B. CAS Number			
39C. Liquid Density (lb/gal)			
39D. Liquid Molecular Weight (lb/lb-mole)			
39E. Vapor Molecular Weight (lb/lb-mole)			

Maximum Vapor Pressure 39F. True (psia) 39G. Reid (psia)			
Months Storage per Year 39H. From 39I. To			

VI. EMISSIONS AND CONTROL DEVICE DATA (required)

40. Emission Control Devices (check as many as apply): ☐ Does Not Apply

- ☐ Carbon Adsorption[1]
- ☐ Condenser[1]
- ☒ Conservation Vent (psig)
  - Vacuum Setting 0.03 Pressure Setting 0.03
- ☐ Emergency Relief Valve (psig)
- ☐ Inert Gas Blanket of
- ☐ Insulation of Tank with
- ☐ Liquid Absorption (scrubber)[1]
- ☐ Refrigeration of Tank
- ☐ Rupture Disc (psig)
- ☐ Vent to Incinerator[1]
- ☐ Other[1] (describe):

[1] Complete appropriate Air Pollution Control Device Sheet.

41. Expected Emission Rate (submit Test Data or Calculations here or elsewhere in the application).

Material Name & CAS No.	Breathing Loss (lb/hr)	Working Loss Amount	Working Loss Units	Annual Loss (lb/yr)	Estimation Method[1]
VOCs as RVP				14453.05	O, TANKS (combined total for ST1-ST5)
Benzene				210.8	O, TANKS (combined total for ST1-ST5)
Toluene				59.9	O, TANKS (combined total for ST1-ST5)
Ethylbenzene				19.8	O, TANKS (combined total for ST1-ST5)
Xylene				16.5	O, TANKS (combined total for ST1-ST5)

[1] EPA = EPA Emission Factor, MB = Material Balance, SS = Similar Source, ST = Similar Source Test, Throughput Data, O = Other (specify)

☒ Remember to attach emissions calculations, including TANKS Summary Sheets if applicable.

Attachment L
EMISSIONS UNIT DATA SHEET
STORAGE TANKS

Provide the following information for each new or modified bulk liquid storage tank as shown on the *Equipment List Form* and other parts of this application. A tank is considered modified if the material to be stored in the tank is different from the existing stored liquid.

IF USING US EPA'S TANKS EMISSION ESTIMATION PROGRAM (AVAILABLE AT **www.epa.gov/tnn/tanks.html**), APPLICANT MAY ATTACH THE SUMMARY SHEETS IN LIEU OF COMPLETING SECTIONS III, IV, & V OF THIS FORM. HOWEVER, SECTIONS I, II, AND VI OF THIS FORM MUST BE COMPLETED. US EPA'S AP-42, SECTION 7.1, "ORGANIC LIQUID STORAGE TANKS," MAY ALSO BE USED TO ESTIMATE VOC AND HAP EMISSIONS (**http://www.epa.gov/tnn/chief/**).

I. GENERAL INFORMATION (required)

1. Bulk Storage Area Name N/A	2. Tank Name Effluent Tanks #1 - #12
3. Tank Equipment Identification No. (as assigned on *Equipment List Form*) ET1 - ET12	4. Emission Point Identification No. (as assigned on *Equipment List Form*) 24E - 35E
5. Date of Commencement of Construction (for existing tanks) N/A	
6. Type of change ☒ New Construction ☐ New Stored Material ☐ Other Tank Modification	
7. Description of Tank Modification (if applicable) N/A	
7A. Does the tank have more than one mode of operation? (e.g. Is there more than one product stored in the tank?) ☐ Yes ☒ No	
7B. If YES, explain and identify which mode is covered by this application (Note: A separate form must be completed for each mode).	
7C. Provide any limitations on source operation affecting emissions, any work practice standards (e.g. production variation, etc.): None	

II. TANK INFORMATION (required)

8. Design Capacity (specify barrels or gallons). Use the internal cross-sectional area multiplied by internal height. 21,000 gallons each	
9A. Tank Internal Diameter (ft) 8.5 (Height) x 8 (Width) - Rectangular Tank	9B. Tank Internal Height (or Length) (ft) Length: 45
10A. Maximum Liquid Height (ft) ~8	10B. Average Liquid Height (ft) ~6.5
11A. Maximum Vapor Space Height (ft) ~0.5	11B. Average Vapor Space Height (ft) ~2
12. Nominal Capacity (specify barrels or gallons). This is also known as "working volume" and considers design liquid levels and overflow valve heights. ~17,000 gallons each	

13A. Maximum annual throughput (gal/yr)	13B. Maximum daily throughput (gal/day)
12775000 each	35000 each

14. Number of Turnovers per year (annual net throughput/maximum tank liquid volume): 752 each

15. Maximum tank fill rate (gal/min): 24.3 each

16. Tank fill method: ☒ Submerged ☐ Splash ☒ Bottom Loading

17. Complete 17A and 17B for Variable Vapor Space Tank Systems ☒ Does Not Apply

17A. Volume Expansion Capacity of System (gal)	17B. Number of transfers into system per year

18. Type of tank (check all that apply):

☒ Fixed Roof ___ vertical X horizontal X flat roof ___ cone roof ___ dome roof ___ other (describe)

☐ External Floating Roof ___ pontoon roof ___ double deck roof

☐ Domed External (or Covered) Floating Roof

☐ Internal Floating Roof ___ vertical column support ___ self-supporting

☐ Variable Vapor Space ___ lifter roof ___ diaphragm

☐ Pressurized ___ spherical ___ cylindrical

☐ Underground

☐ Other (describe)

III. TANK CONSTRUCTION & OPERATION INFORMATION (optional if providing TANKS Summary Sheets)

19. Tank Shell Construction:

☐ Riveted ☐ Gunite lined ☐ Epoxy-coated rivets ☐ Other (describe)

20A. Shell Color	20B. Roof Color	20C. Year Last Painted

21. Shell Condition (if metal and unlined):

☐ No Rust ☐ Light Rust ☐ Dense Rust ☐ Not applicable

22A. Is the tank heated? ☐ YES ☐ NO

22B. If YES, provide the operating temperature (°F)

22C. If YES, please describe how heat is provided to tank.

23. Operating Pressure Range (psig): atmospheric to

24. Complete the following section for **Vertical Fixed Roof Tanks** ☐ Does Not Apply

24A. For dome roof, provide roof radius (ft)

24B. For cone roof, provide slope (ft/ft)

25. Complete the following section for **Floating Roof Tanks** ☐ Does Not Apply

25A. Year Internal Floaters Installed:

25B. Primary Seal Type: (check one) ☐ Metallic (Mechanical) Shoe Seal ☐ Liquid Mounted Resilient Seal ☐ Vapor Mounted Resilient Seal ☐ Other (describe):

25C. Is the Floating Roof equipped with a Secondary Seal? ☐ YES ☐ NO

25D. If YES, how is the secondary seal mounted? (check one) ☐ Shoe ☐ Rim ☐ Other (describe):

25E. Is the Floating Roof equipped with a weather shield? ☐ YES ☐ NO

25F. Describe deck fittings; indicate the number of each type of fitting:		
ACCESS HATCH		
BOLT COVER, GASKETED:	UNBOLTED COVER, GASKETED:	UNBOLTED COVER, UNGASKETED:
AUTOMATIC GAUGE FLOAT WELL		
BOLT COVER, GASKETED:	UNBOLTED COVER, GASKETED:	UNBOLTED COVER, UNGASKETED:
COLUMN WELL		
BUILT-UP COLUMN – SLIDING COVER, GASKETED:	BUILT-UP COLUMN – SLIDING COVER, UNGASKETED:	PIPE COLUMN – FLEXIBLE FABRIC SLEEVE SEAL:
LADDER WELL		
PIP COLUMN – SLIDING COVER, GASKETED:	PIPE COLUMN – SLIDING COVER, UNGASKETED:	
GAUGE-HATCH/SAMPLE PORT		
SLIDING COVER, GASKETED:	SLIDING COVER, UNGASKETED:	
ROOF LEG OR HANGER WELL		
WEIGHTED MECHANICAL ACTUATION, GASKETED:	WEIGHTED MECHANICAL ACTUATION, UNGASKETED:	SAMPLE WELL-SLIT FABRIC SEAL (10% OPEN AREA)
VACUUM BREAKER		
WEIGHTED MECHANICAL ACTUATION, GASKETED:	WEIGHTED MECHANICAL ACTUATION, UNGASKETED:	
RIM VENT		
WEIGHTED MECHANICAL ACTUATION GASKETED:	WEIGHTED MECHANICAL ACTUATION, UNGASKETED:	
DECK DRAIN (3-INCH DIAMETER)		
OPEN:	90% CLOSED:	
STUB DRAIN		
1-INCH DIAMETER:		
OTHER (DESCRIBE, ATTACH ADDITIONAL PAGES IF NECESSARY)		

26. Complete the following section for Internal Floating Roof Tanks ☐ Does Not Apply	
26A. Deck Type: ☐ Bolted ☐ Welded	
26B. For Bolted decks, provide deck construction:	
26C. Deck seam: ☐ Continuous sheet construction 5 feet wide ☐ Continuous sheet construction 6 feet wide ☐ Continuous sheet construction 7 feet wide ☐ Continuous sheet construction 5 × 7.5 feet wide ☐ Continuous sheet construction 5 × 12 feet wide ☐ Other (describe)	
26D. Deck seam length (ft)	26E. Area of deck (ft^2)
For column supported tanks: 26F. Number of columns:	26G. Diameter of each column:

IV. SITE INFORMANTION (optional if providing TANKS Summary Sheets)

27. Provide the city and state on which the data in this section are based.
28. Daily Average Ambient Temperature (°F)
29. Annual Average Maximum Temperature (°F)
30. Annual Average Minimum Temperature (°F)
31. Average Wind Speed (miles/hr)
32. Annual Average Solar Insulation Factor (BTU/(ft^2·day))
33. Atmospheric Pressure (psia)

V. LIQUID INFORMATION (optional if providing TANKS Summary Sheets)

34. Average daily temperature range of bulk liquid:	
34A. Minimum (°F)	34B. Maximum (°F)
35. Average operating pressure range of tank:	
35A. Minimum (psig)	35B. Maximum (psig)
36A. Minimum Liquid Surface Temperature (°F)	36B. Corresponding Vapor Pressure (psia)
37A. Average Liquid Surface Temperature (°F)	37B. Corresponding Vapor Pressure (psia)
38A. Maximum Liquid Surface Temperature (°F)	38B. Corresponding Vapor Pressure (psia)

39. Provide the following for <u>each</u> liquid or gas to be stored in tank. Add additional pages if necessary.

39A. Material Name or Composition			
39B. CAS Number			
39C. Liquid Density (lb/gal)			
39D. Liquid Molecular Weight (lb/lb-mole)			
39E. Vapor Molecular Weight (lb/lb-mole)			

Maximum Vapor Pressure 39F. True (psia) 39G. Reid (psia)			
Months Storage per Year 39H. From 39I. To			

VI. EMISSIONS AND CONTROL DEVICE DATA (required)

40. Emission Control Devices (check as many as apply): ☐ Does Not Apply

- ☐ Carbon Adsorption[1]
- ☐ Condenser[1]
- ☒ Conservation Vent (psig)
  - Vacuum Setting 0.03 Pressure Setting 0.03
- ☐ Emergency Relief Valve (psig)
- ☐ Inert Gas Blanket of
- ☐ Insulation of Tank with
- ☐ Liquid Absorption (scrubber)[1]
- ☐ Refrigeration of Tank
- ☐ Rupture Disc (psig)
- ☐ Vent to Incinerator[1]
- ☐ Other[1] (describe):

[1] Complete appropriate Air Pollution Control Device Sheet.

41. Expected Emission Rate (submit Test Data or Calculations here or elsewhere in the application).

Material Name & CAS No.	Breathing Loss (lb/hr)	Working Loss Amount	Working Loss Units	Annual Loss (lb/yr)	Estimation Method[1]
VOCs as RVP6				3934.56	O, TANKS (combined total for ET1-ET12)
Benzene				57.96	O, TANKS (combined total for ET1-ET12)
Toluene				16.56	O, TANKS (combined total for ET1-ET12)
Ethylbenzene				5.52	O, TANKS (combined total for ET1-ET12)
Xylene				4.56	O, TANKS (combined total for ET1-ET12)

[1] EPA = EPA Emission Factor, MB = Material Balance, SS = Similar Source, ST = Similar Source Test, Throughput Data, O = Other (specify)

☒ Remember to attach emissions calculations, including TANKS Summary Sheets if applicable.

Attachment L
EMISSIONS UNIT DATA SHEET
STORAGE TANKS

Provide the following information for each new or modified bulk liquid storage tank as shown on the *Equipment List Form* and other parts of this application. A tank is considered modified if the material to be stored in the tank is different from the existing stored liquid.

IF USING US EPA'S TANKS EMISSION ESTIMATION PROGRAM (AVAILABLE AT **www.epa.gov/tnn/tanks.html**), APPLICANT MAY ATTACH THE SUMMARY SHEETS IN LIEU OF COMPLETING SECTIONS III, IV, & V OF THIS FORM. HOWEVER, SECTIONS I, II, AND VI OF THIS FORM MUST BE COMPLETED. US EPA'S AP-42, SECTION 7.1, "ORGANIC LIQUID STORAGE TANKS," MAY ALSO BE USED TO ESTIMATE VOC AND HAP EMISSIONS (**http://www.epa.gov/tnn/chief/**).

I. GENERAL INFORMATION (required)

1. Bulk Storage Area Name N/A	2. Tank Name Sludge Influent Tanks #1 & #2
3. Tank Equipment Identification No. (as assigned on *Equipment List Form*) SI1 & SI2	4. Emission Point Identification No. (as assigned on *Equipment List Form*) 36E & 37E
5. Date of Commencement of Construction (for existing tanks) N/A	
6. Type of change ☒ New Construction ☐ New Stored Material ☐ Other Tank Modification	
7. Description of Tank Modification (if applicable) N/A	
7A. Does the tank have more than one mode of operation? (e.g. Is there more than one product stored in the tank?) ☐ Yes ☒ No	
7B. If YES, explain and identify which mode is covered by this application (Note: A separate form must be completed for each mode).	
7C. Provide any limitations on source operation affecting emissions, any work practice standards (e.g. production variation, etc.): None	

II. TANK INFORMATION (required)

8. Design Capacity (specify barrels or gallons). Use the internal cross-sectional area multiplied by internal height. 21,000 gallons each	
9A. Tank Internal Diameter (ft) 8.5 (Height) x 8 (Width) - Rectangular Tank	9B. Tank Internal Height (or Length) (ft) Length: 45
10A. Maximum Liquid Height (ft) ~8	10B. Average Liquid Height (ft) ~6.5
11A. Maximum Vapor Space Height (ft) ~0.5	11B. Average Vapor Space Height (ft) ~2
12. Nominal Capacity (specify barrels or gallons). This is also known as "working volume" and considers design liquid levels and overflow valve heights. ~17,000 gallons each	

13A. Maximum annual throughput (gal/yr) 15069390 each	13B. Maximum daily throughput (gal/day) 41286 each
14. Number of Turnovers per year (annual net throughput/maximum tank liquid volume) 886 each	
15. Maximum tank fill rate (gal/min) 28.7 each	
16. Tank fill method ☐ Submerged ☐ Splash ☒ Bottom Loading	
17. Complete 17A and 17B for Variable Vapor Space Tank Systems ☒ Does Not Apply	
17A. Volume Expansion Capacity of System (gal)	17B. Number of transfers into system per year

18. Type of tank (check all that apply):
- ☒ Fixed Roof ___ vertical X horizontal X flat roof ___ cone roof ___ dome roof ___ other (describe)
- ☐ External Floating Roof ___ pontoon roof ___ double deck roof
- ☐ Domed External (or Covered) Floating Roof
- ☐ Internal Floating Roof ___ vertical column support ___ self-supporting
- ☐ Variable Vapor Space ___ lifter roof ___ diaphragm
- ☐ Pressurized ___ spherical ___ cylindrical
- ☐ Underground
- ☐ Other (describe)

III. TANK CONSTRUCTION & OPERATION INFORMATION (optional if providing TANKS Summary Sheets)

19. Tank Shell Construction:
☐ Riveted ☐ Gunite lined ☐ Epoxy-coated rivets ☐ Other (describe)

20A. Shell Color	20B. Roof Color	20C. Year Last Painted

21. Shell Condition (if metal and unlined):
☐ No Rust ☐ Light Rust ☐ Dense Rust ☐ Not applicable

22A. Is the tank heated? ☐ YES ☐ NO

22B. If YES, provide the operating temperature (°F)

22C. If YES, please describe how heat is provided to tank.

23. Operating Pressure Range (psig): atmospheric to

24. Complete the following section for **Vertical Fixed Roof Tanks** ☐ Does Not Apply

24A. For dome roof, provide roof radius (ft)

24B. For cone roof, provide slope (ft/ft)

25. Complete the following section for **Floating Roof Tanks** ☐ Does Not Apply

25A. Year Internal Floaters Installed:

25B. Primary Seal Type: (check one)
☐ Metallic (Mechanical) Shoe Seal ☐ Liquid Mounted Resilient Seal
☐ Vapor Mounted Resilient Seal ☐ Other (describe):

25C. Is the Floating Roof equipped with a Secondary Seal? ☐ YES ☐ NO

25D. If YES, how is the secondary seal mounted? (check one) ☐ Shoe ☐ Rim ☐ Other (describe):

25E. Is the Floating Roof equipped with a weather shield? ☐ YES ☐ NO

25F. Describe deck fittings; indicate the number of each type of fitting:		
ACCESS HATCH		
BOLT COVER, GASKETED:	UNBOLTED COVER, GASKETED:	UNBOLTED COVER, UNGASKETED:
AUTOMATIC GAUGE FLOAT WELL		
BOLT COVER, GASKETED:	UNBOLTED COVER, GASKETED:	UNBOLTED COVER, UNGASKETED:
COLUMN WELL		
BUILT-UP COLUMN – SLIDING COVER, GASKETED:	BUILT-UP COLUMN – SLIDING COVER, UNGASKETED:	PIPE COLUMN – FLEXIBLE FABRIC SLEEVE SEAL:
LADDER WELL		
PIP COLUMN – SLIDING COVER, GASKETED:	PIPE COLUMN – SLIDING COVER, UNGASKETED:	
GAUGE-HATCH/SAMPLE PORT		
SLIDING COVER, GASKETED:	SLIDING COVER, UNGASKETED:	
ROOF LEG OR HANGER WELL		
WEIGHTED MECHANICAL ACTUATION, GASKETED:	WEIGHTED MECHANICAL ACTUATION, UNGASKETED:	SAMPLE WELL-SLIT FABRIC SEAL (10% OPEN AREA)
VACUUM BREAKER		
WEIGHTED MECHANICAL ACTUATION, GASKETED:	WEIGHTED MECHANICAL ACTUATION, UNGASKETED:	
RIM VENT		
WEIGHTED MECHANICAL ACTUATION GASKETED:	WEIGHTED MECHANICAL ACTUATION, UNGASKETED:	
DECK DRAIN (3-INCH DIAMETER)		
OPEN:	90% CLOSED:	
STUB DRAIN		
1-INCH DIAMETER:		
OTHER (DESCRIBE, ATTACH ADDITIONAL PAGES IF NECESSARY)		

26. Complete the following section for Internal Floating Roof Tanks ☐ Does Not Apply	
26A. Deck Type: ☐ Bolted ☐ Welded	
26B. For Bolted decks, provide deck construction:	
26C. Deck seam: ☐ Continuous sheet construction 5 feet wide ☐ Continuous sheet construction 6 feet wide ☐ Continuous sheet construction 7 feet wide ☐ Continuous sheet construction 5 × 7.5 feet wide ☐ Continuous sheet construction 5 × 12 feet wide ☐ Other (describe)	
26D. Deck seam length (ft)	26E. Area of deck (ft^2)
For column supported tanks: 26F. Number of columns:	26G. Diameter of each column:

IV. SITE INFORMANTION (optional if providing TANKS Summary Sheets)

27. Provide the city and state on which the data in this section are based.
28. Daily Average Ambient Temperature (°F)
29. Annual Average Maximum Temperature (°F)
30. Annual Average Minimum Temperature (°F)
31. Average Wind Speed (miles/hr)
32. Annual Average Solar Insulation Factor (BTU/(ft^2·day))
33. Atmospheric Pressure (psia)

V. LIQUID INFORMATION (optional if providing TANKS Summary Sheets)

34. Average daily temperature range of bulk liquid:	
34A. Minimum (°F)	34B. Maximum (°F)
35. Average operating pressure range of tank:	
35A. Minimum (psig)	35B. Maximum (psig)
36A. Minimum Liquid Surface Temperature (°F)	36B. Corresponding Vapor Pressure (psia)
37A. Average Liquid Surface Temperature (°F)	37B. Corresponding Vapor Pressure (psia)
38A. Maximum Liquid Surface Temperature (°F)	38B. Corresponding Vapor Pressure (psia)

39. Provide the following for <u>each</u> liquid or gas to be stored in tank. Add additional pages if necessary.			
39A. Material Name or Composition			
39B. CAS Number			
39C. Liquid Density (lb/gal)			
39D. Liquid Molecular Weight (lb/lb-mole)			
39E. Vapor Molecular Weight (lb/lb-mole)			

Maximum Vapor Pressure 39F. True (psia) 39G. Reid (psia)			
Months Storage per Year 39H. From 39I. To			

VI. EMISSIONS AND CONTROL DEVICE DATA (required)

40. Emission Control Devices (check as many as apply): ☐ Does Not Apply

- ☐ Carbon Adsorption[1]
- ☐ Condenser[1]
- ☒ Conservation Vent (psig)
  - Vacuum Setting 0.03 Pressure Setting 0.03
- ☐ Emergency Relief Valve (psig)
- ☐ Inert Gas Blanket of
- ☐ Insulation of Tank with
- ☐ Liquid Absorption (scrubber)[1]
- ☐ Refrigeration of Tank
- ☐ Rupture Disc (psig)
- ☐ Vent to Incinerator[1]
- ☐ Other[1] (describe):

[1] Complete appropriate Air Pollution Control Device Sheet.

41. Expected Emission Rate (submit Test Data or Calculations here or elsewhere in the application).

Material Name & CAS No.	Breathing Loss (lb/hr)	Working Loss Amount	Working Loss Units	Annual Loss (lb/yr)	Estimation Method[1]
VOCs as RVP				747.86	O, TANKS (combined total for SI1 & SI2)
Benzene				10.9	O, TANKS (combined total for SI1 & SI2)
Toluene				3.1	O, TANKS (combined total for SI1 & SI2)
Ethylbenzene				1.02	O, TANKS (combined total for SI1 & SI2)
Xylene				0.86	O, TANKS (combined total for SI1 & SI2)

[1] EPA = EPA Emission Factor, MB = Material Balance, SS = Similar Source, ST = Similar Source Test, Throughput Data, O = Other (specify)

☒ Remember to attach emissions calculations, including TANKS Summary Sheets if applicable.

Attachment L
EMISSIONS UNIT DATA SHEET
STORAGE TANKS

Provide the following information for each new or modified bulk liquid storage tank as shown on the *Equipment List Form* and other parts of this application. A tank is considered modified if the material to be stored in the tank is different from the existing stored liquid.

IF USING US EPA's TANKS EMISSION ESTIMATION PROGRAM (AVAILABLE AT **www.epa.gov/tnn/tanks.html**), APPLICANT MAY ATTACH THE SUMMARY SHEETS IN LIEU OF COMPLETING SECTIONS III, IV, & V OF THIS FORM. HOWEVER, SECTIONS I, II, AND VI OF THIS FORM MUST BE COMPLETED. US EPA's AP-42, SECTION 7.1, "ORGANIC LIQUID STORAGE TANKS," MAY ALSO BE USED TO ESTIMATE VOC AND HAP EMISSIONS (**http://www.epa.gov/tnn/chief/**).

I. GENERAL INFORMATION (required)

1. Bulk Storage Area Name N/A	2. Tank Name Filtrate Water #1
3. Tank Equipment Identification No. (as assigned on *Equipment List Form*) FT1	4. Emission Point Identification No. (as assigned on *Equipment List Form*) 38E
5. Date of Commencement of Construction (for existing tanks) N/A	
6. Type of change ☒ New Construction ☐ New Stored Material ☐ Other Tank Modification	
7. Description of Tank Modification (if applicable) N/A	
7A. Does the tank have more than one mode of operation? (e.g. Is there more than one product stored in the tank?) ☐ Yes ☒ No	
7B. If YES, explain and identify which mode is covered by this application (Note: A separate form must be completed for each mode).	
7C. Provide any limitations on source operation affecting emissions, any work practice standards (e.g. production variation, etc.): None	

II. TANK INFORMATION (required)

8. Design Capacity (specify barrels or gallons). Use the internal cross-sectional area multiplied by internal height. 21,000 gallons	
9A. Tank Internal Diameter (ft) 8.5 (Height) x 8 (Width) - Rectangular Tank	9B. Tank Internal Height (or Length) (ft) Length: 45
10A. Maximum Liquid Height (ft) ~8	10B. Average Liquid Height (ft) ~6.5
11A. Maximum Vapor Space Height (ft) ~0.5	11B. Average Vapor Space Height (ft) ~2
12. Nominal Capacity (specify barrels or gallons). This is also known as "working volume" and considers design liquid levels and overflow valve heights. ~17,000 gallons	

25F. Describe deck fittings; indicate the number of each type of fitting:		
ACCESS HATCH		
BOLT COVER, GASKETED:	UNBOLTED COVER, GASKETED:	UNBOLTED COVER, UNGASKETED:
AUTOMATIC GAUGE FLOAT WELL		
BOLT COVER, GASKETED:	UNBOLTED COVER, GASKETED:	UNBOLTED COVER, UNGASKETED:
COLUMN WELL		
BUILT-UP COLUMN – SLIDING COVER, GASKETED:	BUILT-UP COLUMN – SLIDING COVER, UNGASKETED:	PIPE COLUMN – FLEXIBLE FABRIC SLEEVE SEAL:
LADDER WELL		
PIP COLUMN – SLIDING COVER, GASKETED:	PIPE COLUMN – SLIDING COVER, UNGASKETED:	
GAUGE-HATCH/SAMPLE PORT		
SLIDING COVER, GASKETED:	SLIDING COVER, UNGASKETED:	
ROOF LEG OR HANGER WELL		
WEIGHTED MECHANICAL ACTUATION, GASKETED:	WEIGHTED MECHANICAL ACTUATION, UNGASKETED:	SAMPLE WELL-SLIT FABRIC SEAL (10% OPEN AREA)
VACUUM BREAKER		
WEIGHTED MECHANICAL ACTUATION, GASKETED:	WEIGHTED MECHANICAL ACTUATION, UNGASKETED:	
RIM VENT		
WEIGHTED MECHANICAL ACTUATION GASKETED:	WEIGHTED MECHANICAL ACTUATION, UNGASKETED:	
DECK DRAIN (3-INCH DIAMETER)		
OPEN:	90% CLOSED:	
STUB DRAIN		
1-INCH DIAMETER:		
OTHER (DESCRIBE, ATTACH ADDITIONAL PAGES IF NECESSARY)		

26. Complete the following section for Internal Floating Roof Tanks ☐ Does Not Apply		
26A. Deck Type: ☐ Bolted ☐ Welded		
26B. For Bolted decks, provide deck construction:		
26C. Deck seam: ☐ Continuous sheet construction 5 feet wide ☐ Continuous sheet construction 6 feet wide ☐ Continuous sheet construction 7 feet wide ☐ Continuous sheet construction 5 × 7.5 feet wide ☐ Continuous sheet construction 5 × 12 feet wide ☐ Other (describe)		
26D. Deck seam length (ft)	26E. Area of deck (ft^2)	
For column supported tanks: 26F. Number of columns:	26G. Diameter of each column:	

IV. SITE INFORMANTION (optional if providing TANKS Summary Sheets)

27. Provide the city and state on which the data in this section are based.
28. Daily Average Ambient Temperature (°F)
29. Annual Average Maximum Temperature (°F)
30. Annual Average Minimum Temperature (°F)
31. Average Wind Speed (miles/hr)
32. Annual Average Solar Insulation Factor (BTU/(ft^2·day))
33. Atmospheric Pressure (psia)

V. LIQUID INFORMATION (optional if providing TANKS Summary Sheets)

34. Average daily temperature range of bulk liquid:			
34A. Minimum (°F)		34B. Maximum (°F)	
35. Average operating pressure range of tank:			
35A. Minimum (psig)		35B. Maximum (psig)	
36A. Minimum Liquid Surface Temperature (°F)		36B. Corresponding Vapor Pressure (psia)	
37A. Average Liquid Surface Temperature (°F)		37B. Corresponding Vapor Pressure (psia)	
38A. Maximum Liquid Surface Temperature (°F)		38B. Corresponding Vapor Pressure (psia)	
39. Provide the following for <u>each</u> liquid or gas to be stored in tank. Add additional pages if necessary.			
39A. Material Name or Composition			
39B. CAS Number			
39C. Liquid Density (lb/gal)			
39D. Liquid Molecular Weight (lb/lb-mole)			
39E. Vapor Molecular Weight (lb/lb-mole)			

Maximum Vapor Pressure 39F. True (psia) 39G. Reid (psia)			
Months Storage per Year 39H. From 39I. To			

VI. EMISSIONS AND CONTROL DEVICE DATA (required)

40. Emission Control Devices (check as many as apply): ☐ Does Not Apply

- ☐ Carbon Adsorption[1]
- ☐ Condenser[1]
- ☒ Conservation Vent (psig)
  - Vacuum Setting 0.03 Pressure Setting 0.03
- ☐ Emergency Relief Valve (psig)
- ☐ Inert Gas Blanket of
- ☐ Insulation of Tank with
- ☐ Liquid Absorption (scrubber)[1]
- ☐ Refrigeration of Tank
- ☐ Rupture Disc (psig)
- ☐ Vent to Incinerator[1]
- ☐ Other[1] (describe):

[1] Complete appropriate Air Pollution Control Device Sheet.

41. Expected Emission Rate (submit Test Data or Calculations here or elsewhere in the application).

Material Name & CAS No.	Breathing Loss (lb/hr)	Working Loss Amount	Working Loss Units	Annual Loss (lb/yr)	Estimation Method[1]
VOCs as RVP				264.19	O, TANKS
Benzene				3.85	O, TANKS
Toluene				1.10	O, TANKS
Ethylbenzene				0.36	O, TANKS
Xylene				0.30	O, TANKS

[1] EPA = EPA Emission Factor, MB = Material Balance, SS = Similar Source, ST = Similar Source Test, Throughput Data, O = Other (specify)

☒ Remember to attach emissions calculations, including TANKS Summary Sheets if applicable.

Attachment L
EMISSIONS UNIT DATA SHEET
STORAGE TANKS

Provide the following information for each new or modified bulk liquid storage tank as shown on the *Equipment List Form* and other parts of this application. A tank is considered modified if the material to be stored in the tank is different from the existing stored liquid.

IF USING US EPA'S TANKS EMISSION ESTIMATION PROGRAM (AVAILABLE AT www.epa.gov/tnn/tanks.html), APPLICANT MAY ATTACH THE SUMMARY SHEETS IN LIEU OF COMPLETING SECTIONS III, IV, & V OF THIS FORM. HOWEVER, SECTIONS I, II, AND VI OF THIS FORM MUST BE COMPLETED. US EPA'S AP-42, SECTION 7.1, "ORGANIC LIQUID STORAGE TANKS," MAY ALSO BE USED TO ESTIMATE VOC AND HAP EMISSIONS (http://www.epa.gov/tnn/chief/).

I. GENERAL INFORMATION (required)

1. Bulk Storage Area Name N/A	2. Tank Name Brine Mixing Tank #1
3. Tank Equipment Identification No. (as assigned on *Equipment List Form*) BT1	4. Emission Point Identification No. (as assigned on *Equipment List Form*) 39E
5. Date of Commencement of Construction (for existing tanks) N/A	
6. Type of change ☒ New Construction ☐ New Stored Material ☐ Other Tank Modification	
7. Description of Tank Modification (if applicable) N/A	
7A. Does the tank have more than one mode of operation? (e.g. Is there more than one product stored in the tank?) ☐ Yes ☒ No	
7B. If YES, explain and identify which mode is covered by this application (Note: A separate form must be completed for each mode).	
7C. Provide any limitations on source operation affecting emissions, any work practice standards (e.g. production variation, etc.): None	

II. TANK INFORMATION (required)

8. Design Capacity (specify barrels or gallons). Use the internal cross-sectional area multiplied by internal height. 3780 gallons	
9A. Tank Internal Diameter (ft) 7 (Height) x 6.5 (Width) - Rectangular Tank	9B. Tank Internal Height (or Length) (ft) Length: 10ft
10A. Maximum Liquid Height (ft) ~6.5	10B. Average Liquid Height (ft) ~5
11A. Maximum Vapor Space Height (ft) ~0.5	11B. Average Vapor Space Height (ft) ~2
12. Nominal Capacity (specify barrels or gallons). This is also known as "working volume" and considers design liquid levels and overflow valve heights. ~3,000 gallons	

13A. Maximum annual throughput (gal/yr)	13B. Maximum daily throughput (gal/day)
360,000	1000

14. Number of Turnovers per year (annual net throughput/maximum tank liquid volume): 120

15. Maximum tank fill rate (gal/min): 17.2

16. Tank fill method: ☐ Submerged ☐ Splash ☒ Bottom Loading

17. Complete 17A and 17B for Variable Vapor Space Tank Systems ☒ Does Not Apply

17A. Volume Expansion Capacity of System (gal)	17B. Number of transfers into system per year

18. Type of tank (check all that apply):

☐ Fixed Roof ___ vertical ___ horizontal ___ flat roof ___ cone roof ___ dome roof
___ other (describe)

☐ External Floating Roof ___ pontoon roof ___ double deck roof

☐ Domed External (or Covered) Floating Roof

☐ Internal Floating Roof ___ vertical column support ___ self-supporting

☐ Variable Vapor Space ___ lifter roof ___ diaphragm

☐ Pressurized ___ spherical ___ cylindrical

☐ Underground

☒ Other (describe) Horizontal Open-Top Mixing Tank.

III. TANK CONSTRUCTION & OPERATION INFORMATION (optional if providing TANKS Summary Sheets)

19. Tank Shell Construction:

☐ Riveted ☐ Gunite lined ☐ Epoxy-coated rivets ☐ Other (describe)

20A. Shell Color	20B. Roof Color	20C. Year Last Painted

21. Shell Condition (if metal and unlined):

☐ No Rust ☐ Light Rust ☐ Dense Rust ☐ Not applicable

22A. Is the tank heated? ☐ YES ☐ NO

22B. If YES, provide the operating temperature (°F)

22C. If YES, please describe how heat is provided to tank.

23. Operating Pressure Range (psig): atmospheric to

24. Complete the following section for **Vertical Fixed Roof Tanks** ☐ Does Not Apply

24A. For dome roof, provide roof radius (ft)

24B. For cone roof, provide slope (ft/ft)

25. Complete the following section for **Floating Roof Tanks** ☐ Does Not Apply

25A. Year Internal Floaters Installed:

25B. Primary Seal Type: (check one)
☐ Metallic (Mechanical) Shoe Seal ☐ Liquid Mounted Resilient Seal
☐ Vapor Mounted Resilient Seal ☐ Other (describe):

25C. Is the Floating Roof equipped with a Secondary Seal? ☐ YES ☐ NO

25D. If YES, how is the secondary seal mounted? (check one) ☐ Shoe ☐ Rim ☐ Other (describe):

25E. Is the Floating Roof equipped with a weather shield? ☐ YES ☐ NO

25F. Describe deck fittings; indicate the number of each type of fitting:		
ACCESS HATCH		
BOLT COVER, GASKETED:	UNBOLTED COVER, GASKETED:	UNBOLTED COVER, UNGASKETED:
AUTOMATIC GAUGE FLOAT WELL		
BOLT COVER, GASKETED:	UNBOLTED COVER, GASKETED:	UNBOLTED COVER, UNGASKETED:
COLUMN WELL		
BUILT-UP COLUMN – SLIDING COVER, GASKETED:	BUILT-UP COLUMN – SLIDING COVER, UNGASKETED:	PIPE COLUMN – FLEXIBLE FABRIC SLEEVE SEAL:
LADDER WELL		
PIP COLUMN – SLIDING COVER, GASKETED:	PIPE COLUMN – SLIDING COVER, UNGASKETED:	
GAUGE-HATCH/SAMPLE PORT		
SLIDING COVER, GASKETED:	SLIDING COVER, UNGASKETED:	
ROOF LEG OR HANGER WELL		
WEIGHTED MECHANICAL ACTUATION, GASKETED:	WEIGHTED MECHANICAL ACTUATION, UNGASKETED:	SAMPLE WELL-SLIT FABRIC SEAL (10% OPEN AREA)
VACUUM BREAKER		
WEIGHTED MECHANICAL ACTUATION, GASKETED:	WEIGHTED MECHANICAL ACTUATION, UNGASKETED:	
RIM VENT		
WEIGHTED MECHANICAL ACTUATION GASKETED:	WEIGHTED MECHANICAL ACTUATION, UNGASKETED:	
DECK DRAIN (3-INCH DIAMETER)		
OPEN:	90% CLOSED:	
STUB DRAIN		
1-INCH DIAMETER:		
OTHER (DESCRIBE, ATTACH ADDITIONAL PAGES IF NECESSARY)		

26. Complete the following section for Internal Floating Roof Tanks ☐ Does Not Apply	
26A. Deck Type: ☐ Bolted ☐ Welded	
26B. For Bolted decks, provide deck construction:	
26C. Deck seam: ☐ Continuous sheet construction 5 feet wide ☐ Continuous sheet construction 6 feet wide ☐ Continuous sheet construction 7 feet wide ☐ Continuous sheet construction 5 × 7.5 feet wide ☐ Continuous sheet construction 5 × 12 feet wide ☐ Other (describe)	
26D. Deck seam length (ft)	26E. Area of deck (ft^2)
For column supported tanks: 26F. Number of columns:	26G. Diameter of each column:

IV. SITE INFORMANTION (optional if providing TANKS Summary Sheets)

27. Provide the city and state on which the data in this section are based.
28. Daily Average Ambient Temperature (°F)
29. Annual Average Maximum Temperature (°F)
30. Annual Average Minimum Temperature (°F)
31. Average Wind Speed (miles/hr)
32. Annual Average Solar Insulation Factor (BTU/(ft^2·day))
33. Atmospheric Pressure (psia)

V. LIQUID INFORMATION (optional if providing TANKS Summary Sheets)

34. Average daily temperature range of bulk liquid:	
34A. Minimum (°F)	34B. Maximum (°F)
35. Average operating pressure range of tank:	
35A. Minimum (psig)	35B. Maximum (psig)
36A. Minimum Liquid Surface Temperature (°F)	36B. Corresponding Vapor Pressure (psia)
37A. Average Liquid Surface Temperature (°F)	37B. Corresponding Vapor Pressure (psia)
38A. Maximum Liquid Surface Temperature (°F)	38B. Corresponding Vapor Pressure (psia)

39. Provide the following for <u>each</u> liquid or gas to be stored in tank. Add additional pages if necessary.			
39A. Material Name or Composition			
39B. CAS Number			
39C. Liquid Density (lb/gal)			
39D. Liquid Molecular Weight (lb/lb-mole)			
39E. Vapor Molecular Weight (lb/lb-mole)			

Maximum Vapor Pressure 39F. True (psia) 39G. Reid (psia)			
Months Storage per Year 39H. From 39I. To			

VI. EMISSIONS AND CONTROL DEVICE DATA (required)

40. Emission Control Devices (check as many as apply): ☒ Does Not Apply

- ☐ Carbon Adsorption[1]
- ☐ Condenser[1]
- ☐ Conservation Vent (psig)
  - Vacuum Setting — Pressure Setting
- ☐ Emergency Relief Valve (psig)
- ☐ Inert Gas Blanket of
- ☐ Insulation of Tank with
- ☐ Liquid Absorption (scrubber)[1]
- ☐ Refrigeration of Tank
- ☐ Rupture Disc (psig)
- ☐ Vent to Incinerator[1]
- ☐ Other[1] (describe):

[1] Complete appropriate Air Pollution Control Device Sheet.

41. Expected Emission Rate (submit Test Data or Calculations here or elsewhere in the application).

Material Name & CAS No.	Breathing Loss (lb/hr)	Working Loss Amount	Working Loss Units	Annual Loss (lb/yr)	Estimation Method[1]
VOCs as RVP 6				18.11	O, TANKS
Benzene				0.26	O, TANKS
Toluene				0.07	O, TANKS
Ethylbenzene				0.02	O, TANKS
Xylene				0.02	O, TANKS

[1] EPA = EPA Emission Factor, MB = Material Balance, SS = Similar Source, ST = Similar Source Test, Throughput Data, O = Other (specify)

☒ Remember to attach emissions calculations, including TANKS Summary Sheets if applicable.

TANKS 4.0.9d
Emissions Report - Detail Format
Tank Indentification and Physical Characteristics

Identification

User Identification:	ITS 1-16
City:	
State:	West Virginia
Company:	Shalewater Solutions LLC.
Type of Tank:	Horizontal Tank
Description:	16 - 21,000gal Influent Storage Tanks (closed-roof frac tanks)

Tank Dimensions

Shell Length (ft):	45.00
Diameter (ft):	8.50
Volume (gallons):	20,000.00
Turnovers:	479.06
Net Throughput(gal/yr):	9,581,250.00
Is Tank Heated (y/n):	N
Is Tank Underground (y/n):	N

Paint Characteristics

Shell Color/Shade:	Gray/Light
Shell Condition	Good

Breather Vent Settings

Vacuum Settings (psig):	-0.03
Pressure Settings (psig)	0.03

Meterological Data used in Emissions Calculations: Charleston, West Virginia (Avg Atmospheric Pressure = 14.25 psia)

TANKS 4.0.9d
Emissions Report - Detail Format
Liquid Contents of Storage Tank

ITS 1-16 - Horizontal Tank
, West Virginia

Mixture/Component	Month	Daily Liquid Surf. Temperature (deg F) Avg.	Min.	Max.	Liquid Bulk Temp (deg F)	Vapor Pressure (psia) Avg.	Min.	Max.	Vapor Mol. Weight.	Liquid Mass Fract.	Vapor Mass Fract.	Mol. Weight	Basis for Vapor Pressure Calculations
100,000ppm VOC MW22 Shalewater	All	61.57	52.97	70.18	57.22	0.3297	0.2483	0.4344	30.0803			21.94	
Benzene						1.2197	0.9578	1.5385	78.1100	0.0025	0.0067	78.11	Option 2: A=6.905, B=1211.033, C=220.79
Ethylbenzene						0.1146	0.0846	0.1534	106.1700	0.0025	0.0006	106.17	Option 2: A=6.975, B=1424.255, C=213.21
Gasoline (RVP 6)						3.0318	2.5304	3.6112	69.0000	0.0900	0.4528	92.00	Option 4: RVP=6, ASTM Slope=3
Toluene						0.3466	0.2642	0.4499	92.1300	0.0025	0.0019	92.13	Option 2: A=6.954, B=1344.8, C=219.48
Water						0.2699	0.1977	0.3641	20.2300	0.9000	0.5374	20.23	Option 2: A=8.07131, B=1730.63, C=233.426
Xylenes (mixed isomers)						0.0955	0.0703	0.1281	106.1700	0.0025	0.0005	106.17	Option 2: A=7.009, B=1462.266, C=215.11

TANKS 4.0.9d
Emissions Report - Detail Format
Detail Calculations (AP-42)

ITS 1-16 - Horizontal Tank
, West Virginia

Annual Emission Calcaulations	
Standing Losses (lb):	73.5666
Vapor Space Volume (cu ft):	1,626.4495
Vapor Density (lb/cu ft):	0.0018
Vapor Space Expansion Factor:	0.0751
Vented Vapor Saturation Factor:	0.9309
Tank Vapor Space Volume:	
Vapor Space Volume (cu ft):	1,626.4495
Tank Diameter (ft):	8.5000
Effective Diameter (ft):	22.0740
Vapor Space Outage (ft):	4.2500
Tank Shell Length (ft):	45.0000
Vapor Density	
Vapor Density (lb/cu ft):	0.0018
Vapor Molecular Weight (lb/lb-mole):	30.0803
Vapor Pressure at Daily Average Liquid Surface Temperature (psia):	0.3297
Daily Avg. Liquid Surface Temp. (deg. R):	521.2427
Daily Average Ambient Temp. (deg. F):	54.9833
Ideal Gas Constant R (psia cuft / (lb-mol-deg R)):	10.731
Liquid Bulk Temperature (deg. R):	516.8933
Tank Paint Solar Absorptance (Shell):	0.5400
Daily Total Solar Insulation Factor (Btu/sqft day):	1,250.5726
Vapor Space Expansion Factor	
Vapor Space Expansion Factor:	0.0751
Daily Vapor Temperature Range (deg. R):	34.4127
Daily Vapor Pressure Range (psia):	0.1862
Breather Vent Press. Setting Range(psia):	0.0600
Vapor Pressure at Daily Average Liquid Surface Temperature (psia):	0.3297
Vapor Pressure at Daily Minimum Liquid Surface Temperature (psia):	0.2483
Vapor Pressure at Daily Maximum Liquid Surface Temperature (psia):	0.4344
Daily Avg. Liquid Surface Temp. (deg R):	521.2427
Daily Min. Liquid Surface Temp. (deg R):	512.6395
Daily Max. Liquid Surface Temp. (deg R):	529.8458
Daily Ambient Temp. Range (deg. R):	21.5333
Vented Vapor Saturation Factor	
Vented Vapor Saturation Factor:	0.9309
Vapor Pressure at Daily Average Liquid: Surface Temperature (psia):	0.3297
Vapor Space Outage (ft):	4.2500
Working Losses (lb):	518.7597
Vapor Molecular Weight (lb/lb-mole):	30.0803
Vapor Pressure at Daily Average Liquid Surface Temperature (psia):	0.3297
Annual Net Throughput (gal/yr.):	9,581,250.0000
Annual Turnovers:	479.0625
Turnover Factor:	0.2293

Tank Diameter (ft):	8.5000
Working Loss Product Factor:	1.0000
Total Losses (lb):	592.3263

TANKS 4.0.9d
Emissions Report - Detail Format
Individual Tank Emission Totals

Emissions Report for: Annual

ITS 1-16 - Horizontal Tank
, West Virginia

	Losses(lbs)		
Components	Working Loss	Breathing Loss	Total Emissions
100,000ppm VOC MW22 Shalewater	518.76	73.57	592.33
Gasoline (RVP 6)	234.88	33.31	268.19
Water	278.78	39.53	318.31
Benzene	3.50	0.50	4.00
Ethylbenzene	0.33	0.05	0.38
Toluene	0.99	0.14	1.14
Xylenes (mixed isomers)	0.27	0.04	0.31

TANKS 4.0.9d
Emissions Report - Detail Format
Tank Indentification and Physical Characteristics

Identification

User Identification:	WT 1-2
City:	
State:	West Virginia
Company:	HEP Shalewater Solutions LLC.
Type of Tank:	Horizontal Tank
Description:	2 - 21,000gal Weir Tanks (closed-roof frac tanks)

Tank Dimensions

Shell Length (ft):	45.00
Diameter (ft):	8.50
Volume (gallons):	20,000.00
Turnovers:	7,665.00
Net Throughput(gal/yr):	153,300,000.00
Is Tank Heated (y/n):	N
Is Tank Underground (y/n):	N

Paint Characteristics

Shell Color/Shade:	Gray/Light
Shell Condition	Good

Breather Vent Settings

Vacuum Settings (psig):	-0.03
Pressure Settings (psig)	0.03

Meterological Data used in Emissions Calculations: Charleston, West Virginia (Avg Atmospheric Pressure = 14.25 psia)

TANKS 4.0.9d
Emissions Report - Detail Format
Liquid Contents of Storage Tank

WT 1-2 - Horizontal Tank
, West Virginia

Mixture/Component	Month	Daily Liquid Surf. Temperature (deg F) Avg.	Min.	Max.	Liquid Bulk Temp (deg F)	Vapor Pressure (psia) Avg.	Min.	Max.	Vapor Mol. Weight.	Liquid Mass Fract.	Vapor Mass Fract.	Mol. Weight	Basis for Vapor Pressure Calculations
100,000ppm VOC MW22 Shalewater	All	61.57	52.97	70.18	57.22	0.3297	0.2483	0.4344	30.0803			21.94	
Benzene						1.2197	0.9578	1.5385	78.1100	0.0025	0.0067	78.11	Option 2: A=6.905, B=1211.033, C=220.79
Ethylbenzene						0.1146	0.0846	0.1534	106.1700	0.0025	0.0006	106.17	Option 2: A=6.975, B=1424.255, C=213.21
Gasoline (RVP 6)						3.0318	2.5304	3.6112	69.0000	0.0900	0.4528	92.00	Option 4: RVP=6, ASTM Slope=3
Toluene						0.3466	0.2642	0.4499	92.1300	0.0025	0.0019	92.13	Option 2: A=6.954, B=1344.8, C=219.48
Water						0.2699	0.1977	0.3641	20.2300	0.9000	0.5374	20.23	Option 2: A=8.07131, B=1730.63, C=233.426
Xylenes (mixed isomers)						0.0955	0.0703	0.1281	106.1700	0.0025	0.0005	106.17	Option 2: A=7.009, B=1462.266, C=215.11

TANKS 4.0.9d
Emissions Report - Detail Format
Detail Calculations (AP-42)

WT 1-2 - Horizontal Tank
, West Virginia

Annual Emission Calcaulations	
Standing Losses (lb):	73.5666
Vapor Space Volume (cu ft):	1,626.4495
Vapor Density (lb/cu ft):	0.0018
Vapor Space Expansion Factor:	0.0751
Vented Vapor Saturation Factor:	0.9309
Tank Vapor Space Volume:	
Vapor Space Volume (cu ft):	1,626.4495
Tank Diameter (ft):	8.5000
Effective Diameter (ft):	22.0740
Vapor Space Outage (ft):	4.2500
Tank Shell Length (ft):	45.0000
Vapor Density	
Vapor Density (lb/cu ft):	0.0018
Vapor Molecular Weight (lb/lb-mole):	30.0803
Vapor Pressure at Daily Average Liquid Surface Temperature (psia):	0.3297
Daily Avg. Liquid Surface Temp. (deg. R):	521.2427
Daily Average Ambient Temp. (deg. F):	54.9833
Ideal Gas Constant R (psia cuft / (lb-mol-deg R)):	10.731
Liquid Bulk Temperature (deg. R):	516.8933
Tank Paint Solar Absorptance (Shell):	0.5400
Daily Total Solar Insulation Factor (Btu/sqft day):	1,250.5726
Vapor Space Expansion Factor	
Vapor Space Expansion Factor:	0.0751
Daily Vapor Temperature Range (deg. R):	34.4127
Daily Vapor Pressure Range (psia):	0.1862
Breather Vent Press. Setting Range(psia):	0.0600
Vapor Pressure at Daily Average Liquid Surface Temperature (psia):	0.3297
Vapor Pressure at Daily Minimum Liquid Surface Temperature (psia):	0.2483
Vapor Pressure at Daily Maximum Liquid Surface Temperature (psia):	0.4344
Daily Avg. Liquid Surface Temp. (deg R):	521.2427
Daily Min. Liquid Surface Temp. (deg R):	512.6395
Daily Max. Liquid Surface Temp. (deg R):	529.8458
Daily Ambient Temp. Range (deg. R):	21.5333
Vented Vapor Saturation Factor	
Vented Vapor Saturation Factor:	0.9309
Vapor Pressure at Daily Average Liquid Surface Temperature (psia):	0.3297
Vapor Space Outage (ft):	4.2500
Working Losses (lb):	6,174.9380
Vapor Molecular Weight (lb/lb-mole):	30.0803
Vapor Pressure at Daily Average Liquid Surface Temperature (psia):	0.3297
Annual Net Throughput (gal/yr.):	153,300,000.0000
Annual Turnovers:	7,665.0000
Turnover Factor:	0.1706

Tank Diameter (ft):	8.5000
Working Loss Product Factor:	1.0000
Total Losses (lb):	6,248.5046

TANKS 4.0.9d
Emissions Report - Detail Format
Individual Tank Emission Totals

Emissions Report for: Annual

WT 1-2 - Horizontal Tank
, West Virginia

	Losses(lbs)		
Components	Working Loss	Breathing Loss	Total Emissions
100,000ppm VOC MW22 Shalewater	6,174.94	73.57	6,248.50
Gasoline (RVP 6)	2,795.90	33.31	2,829.21
Benzene	41.66	0.50	42.16
Ethylbenzene	3.91	0.05	3.96
Toluene	11.84	0.14	11.98
Xylenes (mixed isomers)	3.26	0.04	3.30
Water	3,318.36	39.53	3,357.90

TANKS 4.0.9d
Emissions Report - Detail Format
Tank Indentification and Physical Characteristics

Identification

User Identification:	ST 1-5
City:	
State:	West Virginia
Company:	HEP Shalewater Solutions LLC.
Type of Tank:	Horizontal Tank
Description:	5 - 21,000gal Settling Tanks (closed-roof frac tanks)

Tank Dimensions

Shell Length (ft):	45.00
Diameter (ft):	8.50
Volume (gallons):	20,000.00
Turnovers:	7,665.00
Net Throughput(gal/yr):	153,300,000.00
Is Tank Heated (y/n):	N
Is Tank Underground (y/n):	N

Paint Characteristics

Shell Color/Shade:	Gray/Light
Shell Condition	Good

Breather Vent Settings

Vacuum Settings (psig):	-0.03
Pressure Settings (psig)	0.03

Meterological Data used in Emissions Calculations: Charleston, West Virginia (Avg Atmospheric Pressure = 14.25 psia)

TANKS 4.0.9d
Emissions Report - Detail Format
Liquid Contents of Storage Tank

ST 1-5 - Horizontal Tank
, West Virginia

Mixture/Component	Month	Daily Liquid Surf. Temperature (deg F) Avg.	Min.	Max.	Liquid Bulk Temp (deg F)	Vapor Pressure (psia) Avg.	Min.	Max.	Vapor Mol. Weight.	Liquid Mass Fract.	Vapor Mass Fract.	Mol. Weight	Basis for Vapor Pressure Calculations
100,000ppm VOC MW22 Shalewater	All	61.57	52.97	70.18	57.22	0.3297	0.2483	0.4344	30.0803			21.94	
Benzene						1.2197	0.9578	1.5385	78.1100	0.0025	0.0067	78.11	Option 2: A=6.905, B=1211.033, C=220.79
Ethylbenzene						0.1146	0.0846	0.1534	106.1700	0.0025	0.0006	106.17	Option 2: A=6.975, B=1424.255, C=213.21
Gasoline (RVP 6)						3.0318	2.5304	3.6112	69.0000	0.0900	0.4528	92.00	Option 4: RVP=6, ASTM Slope=3
Toluene						0.3466	0.2642	0.4499	92.1300	0.0025	0.0019	92.13	Option 2: A=6.954, B=1344.8, C=219.48
Water						0.2699	0.1977	0.3641	20.2300	0.9000	0.5374	20.23	Option 2: A=8.07131, B=1730.63, C=233.426
Xylenes (mixed isomers)						0.0955	0.0703	0.1281	106.1700	0.0025	0.0005	106.17	Option 2: A=7.009, B=1462.266, C=215.11

TANKS 4.0.9d
Emissions Report - Detail Format
Detail Calculations (AP-42)

ST 1-5 - Horizontal Tank
, West Virginia

Annual Emission Calcaulations	
Standing Losses (lb):	73.5666
Vapor Space Volume (cu ft):	1,626.4495
Vapor Density (lb/cu ft):	0.0018
Vapor Space Expansion Factor:	0.0751
Vented Vapor Saturation Factor:	0.9309
Tank Vapor Space Volume:	
Vapor Space Volume (cu ft):	1,626.4495
Tank Diameter (ft):	8.5000
Effective Diameter (ft):	22.0740
Vapor Space Outage (ft):	4.2500
Tank Shell Length (ft):	45.0000
Vapor Density	
Vapor Density (lb/cu ft):	0.0018
Vapor Molecular Weight (lb/lb-mole):	30.0803
Vapor Pressure at Daily Average Liquid Surface Temperature (psia):	0.3297
Daily Avg. Liquid Surface Temp. (deg. R):	521.2427
Daily Average Ambient Temp. (deg. F):	54.9833
Ideal Gas Constant R (psia cuft / (lb-mol-deg R)):	10.731
Liquid Bulk Temperature (deg. R):	516.8933
Tank Paint Solar Absorptance (Shell):	0.5400
Daily Total Solar Insulation Factor (Btu/sqft day):	1,250.5726
Vapor Space Expansion Factor	
Vapor Space Expansion Factor:	0.0751
Daily Vapor Temperature Range (deg. R):	34.4127
Daily Vapor Pressure Range (psia):	0.1862
Breather Vent Press. Setting Range(psia):	0.0600
Vapor Pressure at Daily Average Liquid Surface Temperature (psia):	0.3297
Vapor Pressure at Daily Minimum Liquid Surface Temperature (psia):	0.2483
Vapor Pressure at Daily Maximum Liquid Surface Temperature (psia):	0.4344
Daily Avg. Liquid Surface Temp. (deg R):	521.2427
Daily Min. Liquid Surface Temp. (deg R):	512.6395
Daily Max. Liquid Surface Temp. (deg R):	529.8458
Daily Ambient Temp. Range (deg. R):	21.5333
Vented Vapor Saturation Factor	
Vented Vapor Saturation Factor:	0.9309
Vapor Pressure at Daily Average Liquid: Surface Temperature (psia):	0.3297
Vapor Space Outage (ft):	4.2500
Working Losses (lb):	6,174.9380
Vapor Molecular Weight (lb/lb-mole):	30.0803
Vapor Pressure at Daily Average Liquid Surface Temperature (psia):	0.3297
Annual Net Throughput (gal/yr.):	153,300,000.0000
Annual Turnovers:	7,665.0000
Turnover Factor:	0.1706

Tank Diameter (ft):	8.5000
Working Loss Product Factor:	1.0000
Total Losses (lb):	6,248.5046

TANKS 4.0.9d
Emissions Report - Detail Format
Individual Tank Emission Totals

Emissions Report for: Annual

ST 1-5 - Horizontal Tank
, West Virginia

	Losses(lbs)		
Components	Working Loss	Breathing Loss	Total Emissions
100,000ppm VOC MW22 Shalewater	6,174.94	73.57	6,248.50
Gasoline (RVP 6)	2,795.90	33.31	2,829.21
Benzene	41.66	0.50	42.16
Ethylbenzene	3.91	0.05	3.96
Toluene	11.84	0.14	11.98
Xylenes (mixed isomers)	3.26	0.04	3.30
Water	3,318.36	39.53	3,357.90

TANKS 4.0.9d
Emissions Report - Detail Format
Tank Indentification and Physical Characteristics

Identification

User Identification:	ET 1-12
City:	
State:	West Virginia
Company:	HEP Shalewater Solutions LLC.
Type of Tank:	Horizontal Tank
Description:	12 - 21,000gal Effluent Tanks (closed-roof frac tanks)

Tank Dimensions

Shell Length (ft):	45.00
Diameter (ft):	8.50
Volume (gallons):	17,000.00
Turnovers:	751.47
Net Throughput(gal/yr):	12,775,000.00
Is Tank Heated (y/n):	N
Is Tank Underground (y/n):	N

Paint Characteristics

Shell Color/Shade:	Gray/Light
Shell Condition	Good

Breather Vent Settings

Vacuum Settings (psig):	-0.03
Pressure Settings (psig)	0.03

Meterological Data used in Emissions Calculations: Charleston, West Virginia (Avg Atmospheric Pressure = 14.25 psia)

TANKS 4.0.9d
Emissions Report - Detail Format
Liquid Contents of Storage Tank

ET 1-12 - Horizontal Tank
, West Virginia

Mixture/Component	Month	Daily Liquid Surf. Temperature (deg F) Avg.	Min.	Max.	Liquid Bulk Temp (deg F)	Vapor Pressure (psia) Avg.	Min.	Max.	Vapor Mol. Weight.	Liquid Mass Fract.	Vapor Mass Fract.	Mol. Weight	Basis for Vapor Pressure Calculations
100,000ppm VOC (10%) HEP Shalewater	Jan	48.84	43.20	54.48	57.22	0.2160	0.1781	0.2611	31.6820			21.94	
Benzene						0.8499	0.7189	1.0001	78.1100	0.0025	0.0068	78.11	Option 2: A=6.905, B=1211.033, C=220.79
Ethylbenzene						0.0728	0.0590	0.0893	106.1700	0.0025	0.0006	106.17	Option 2: A=6.975, B=1424.255, C=213.21
Gasoline (RVP 6)						2.3151	2.0453	2.6133	69.0000	0.0900	0.5010	92.00	Option 4: RVP=6, ASTM Slope=3
Toluene						0.2310	0.1914	0.2774	92.1300	0.0025	0.0019	92.13	Option 2: A=6.954, B=1344.8, C=219.48
Water						0.1696	0.1368	0.2090	20.2300	0.9000	0.4893	20.23	Option 2: A=8.07131, B=1730.63, C=233.426
Xylenes (mixed isomers)						0.0604	0.0488	0.0742	106.1700	0.0025	0.0005	106.17	Option 2: A=7.009, B=1462.266, C=215.11
100,000ppm VOC (10%) HEP Shalewater	Feb	51.29	44.55	58.03	57.22	0.2347	0.1866	0.2937	31.3509			21.94	
Benzene						0.9127	0.7487	1.1056	78.1100	0.0025	0.0068	78.11	Option 2: A=6.905, B=1211.033, C=220.79
Ethylbenzene						0.0796	0.0621	0.1013	106.1700	0.0025	0.0006	106.17	Option 2: A=6.975, B=1424.255, C=213.21
Gasoline (RVP 6)						2.4411	2.1076	2.8166	69.0000	0.0900	0.4914	92.00	Option 4: RVP=6, ASTM Slope=3
Toluene						0.2503	0.2004	0.3104	92.1300	0.0025	0.0019	92.13	Option 2: A=6.954, B=1344.8, C=219.48
Water						0.1858	0.1441	0.2378	20.2300	0.9000	0.4988	20.23	Option 2: A=8.07131, B=1730.63, C=233.426
Xylenes (mixed isomers)						0.0661	0.0514	0.0843	106.1700	0.0025	0.0005	106.17	Option 2: A=7.009, B=1462.266, C=215.11
100,000ppm VOC (10%) HEP Shalewater	Mar	57.27	48.89	65.66	57.22	0.2864	0.2164	0.3762	30.5895			21.94	
Benzene						1.0823	0.8511	1.3634	78.1100	0.0025	0.0068	78.11	Option 2: A=6.905, B=1211.033, C=220.79
Ethylbenzene						0.0986	0.0729	0.1318	106.1700	0.0025	0.0006	106.17	Option 2: A=6.975, B=1424.255, C=213.21
Gasoline (RVP 6)						2.7720	2.3176	3.2966	69.0000	0.0900	0.4686	92.00	Option 4: RVP=6, ASTM Slope=3
Toluene						0.3031	0.2314	0.3928	92.1300	0.0025	0.0019	92.13	Option 2: A=6.954, B=1344.8, C=219.48
Water						0.2314	0.1699	0.3115	20.2300	0.9000	0.5215	20.23	Option 2: A=8.07131, B=1730.63, C=233.426
Xylenes (mixed isomers)						0.0821	0.0605	0.1100	106.1700	0.0025	0.0005	106.17	Option 2: A=7.009, B=1462.266, C=215.11
100,000ppm VOC (10%) HEP Shalewater	Apr	62.62	52.57	72.66	57.22	0.3411	0.2450	0.4698	29.9611			21.94	
Benzene						1.2553	0.9470	1.6425	78.1100	0.0025	0.0067	78.11	Option 2: A=6.905, B=1211.033, C=220.79
Ethylbenzene						0.1188	0.0834	0.1665	106.1700	0.0025	0.0006	106.17	Option 2: A=6.975, B=1424.255, C=213.21
Gasoline (RVP 6)						3.0979	2.5091	3.7946	69.0000	0.0900	0.4490	92.00	Option 4: RVP=6, ASTM Slope=3
Toluene						0.3580	0.2609	0.4842	92.1300	0.0025	0.0019	92.13	Option 2: A=6.954, B=1344.8, C=219.48
Water						0.2801	0.1949	0.3962	20.2300	0.9000	0.5412	20.23	Option 2: A=8.07131, B=1730.63, C=233.426
Xylenes (mixed isomers)						0.0990	0.0693	0.1392	106.1700	0.0025	0.0005	106.17	Option 2: A=7.009, B=1462.266, C=215.11
100,000ppm VOC (10%) HEP Shalewater	May	67.58	56.53	78.63	57.22	0.4001	0.2795	0.5653	29.4188			21.94	
Benzene						1.4358	1.0599	1.9158	78.1100	0.0025	0.0067	78.11	Option 2: A=6.905, B=1211.033, C=220.79
Ethylbenzene						0.1406	0.0961	0.2018	106.1700	0.0025	0.0007	106.17	Option 2: A=6.975, B=1424.255, C=213.21
Gasoline (RVP 6)						3.4276	2.7290	4.2650	69.0000	0.0900	0.4314	92.00	Option 4: RVP=6, ASTM Slope=3
Toluene						0.4163	0.2961	0.5755	92.1300	0.0025	0.0019	92.13	Option 2: A=6.954, B=1344.8, C=219.48
Water						0.3330	0.2252	0.4833	20.2300	0.9000	0.5588	20.23	Option 2: A=8.07131, B=1730.63, C=233.426
Xylenes (mixed isomers)						0.1174	0.0799	0.1691	106.1700	0.0025	0.0005	106.17	Option 2: A=7.009, B=1462.266, C=215.11
100,000ppm VOC (10%) HEP Shalewater	Jun	71.63	60.22	83.05	57.22	0.4548	0.3155	0.6468	29.0030			21.94	
Benzene						1.5988	1.1749	2.1416	78.1100	0.0025	0.0066	78.11	Option 2: A=6.905, B=1211.033, C=220.79
Ethylbenzene						0.1609	0.1094	0.2321	106.1700	0.0025	0.0007	106.17	Option 2: A=6.975, B=1424.255, C=213.21
Gasoline (RVP 6)						3.7178	2.9479	4.6432	69.0000	0.0900	0.4174	92.00	Option 4: RVP=6, ASTM Slope=3
Toluene						0.4697	0.3324	0.6521	92.1300	0.0025	0.0020	92.13	Option 2: A=6.954, B=1344.8, C=219.48
Water						0.3826	0.2572	0.5583	20.2300	0.9000	0.5727	20.23	Option 2: A=8.07131, B=1730.63, C=233.426
Xylenes (mixed isomers)						0.1345	0.0911	0.1947	106.1700	0.0025	0.0006	106.17	Option 2: A=7.009, B=1462.266, C=215.11
100,000ppm VOC (10%) HEP Shalewater	Jul	72.90	62.13	83.68	57.22	0.4733	0.3357	0.6593	28.8776			21.94	
Benzene						1.6529	1.2384	2.1756	78.1100	0.0025	0.0066	78.11	Option 2: A=6.905, B=1211.033, C=220.79

Ethylbenzene					0.1678	0.1168	0.2367	106.1700	0.0025	0.0007	106.17	Option 2: A=6.975, B=1424.255, C=213.21
Gasoline (RVP 6)					3.8127	3.0666	4.6994	69.0000	0.0900	0.4131	92.00	Option 4: RVP=6, ASTM Slope=3
Toluene					0.4876	0.3526	0.6637	92.1300	0.0025	0.0020	92.13	Option 2: A=6.954, B=1344.8, C=219.48
Water					0.3994	0.2752	0.5698	20.2300	0.9000	0.5770	20.23	Option 2: A=8.07131, B=1730.63, C=233.426
Xylenes (mixed isomers)					0.1403	0.0974	0.1987	106.1700	0.0025	0.0006	106.17	Option 2: A=7.009, B=1462.266, C=215.11
100,000ppm VOC (10%) HEP Shalewater	Aug	71.71	61.60	81.82	57.22	0.4559	0.3299	0.6232	28.9956			21.94	
Benzene						1.6019	1.2205	2.0768	78.1100	0.0025	0.0066	78.11	Option 2: A=6.905, B=1211.033, C=220.79
Ethylbenzene						0.1613	0.1147	0.2233	106.1700	0.0025	0.0007	106.17	Option 2: A=6.975, B=1424.255, C=213.21
Gasoline (RVP 6)						3.7233	3.0332	4.5356	69.0000	0.0900	0.4172	92.00	Option 4: RVP=6, ASTM Slope=3
Toluene						0.4707	0.3469	0.6300	92.1300	0.0025	0.0020	92.13	Option 2: A=6.954, B=1344.8, C=219.48
Water						0.3836	0.2701	0.5365	20.2300	0.9000	0.5730	20.23	Option 2: A=8.07131, B=1730.63, C=233.426
Xylenes (mixed isomers)						0.1349	0.0956	0.1873	106.1700	0.0025	0.0006	106.17	Option 2: A=7.009, B=1462.266, C=215.11
100,000ppm VOC (10%) HEP Shalewater	Sep	67.66	58.46	76.85	57.22	0.4010	0.2978	0.5351	29.4108			21.94	
Benzene						1.4387	1.1190	1.8306	78.1100	0.0025	0.0067	78.11	Option 2: A=6.905, B=1211.033, C=220.79
Ethylbenzene						0.1410	0.1029	0.1907	106.1700	0.0025	0.0007	106.17	Option 2: A=6.975, B=1424.255, C=213.21
Gasoline (RVP 6)						3.4329	2.8420	4.1199	69.0000	0.0900	0.4311	92.00	Option 4: RVP=6, ASTM Slope=3
Toluene						0.4172	0.3147	0.5468	92.1300	0.0025	0.0019	92.13	Option 2: A=6.954, B=1344.8, C=219.48
Water						0.3339	0.2415	0.4557	20.2300	0.9000	0.5591	20.23	Option 2: A=8.07131, B=1730.63, C=233.426
Xylenes (mixed isomers)						0.1177	0.0856	0.1597	106.1700	0.0025	0.0005	106.17	Option 2: A=7.009, B=1462.266, C=215.11
100,000ppm VOC (10%) HEP Shalewater	Oct	61.24	52.96	69.51	57.22	0.3261	0.2482	0.4254	30.1192			21.94	
Benzene						1.2085	0.9576	1.5116	78.1100	0.0025	0.0067	78.11	Option 2: A=6.905, B=1211.033, C=220.79
Ethylbenzene						0.1133	0.0846	0.1500	106.1700	0.0025	0.0006	106.17	Option 2: A=6.975, B=1424.255, C=213.21
Gasoline (RVP 6)						3.0107	2.5300	3.5634	69.0000	0.0900	0.4540	92.00	Option 4: RVP=6, ASTM Slope=3
Toluene						0.3431	0.2642	0.4410	92.1300	0.0025	0.0019	92.13	Option 2: A=6.954, B=1344.8, C=219.48
Water						0.2667	0.1977	0.3559	20.2300	0.9000	0.5362	20.23	Option 2: A=8.07131, B=1730.63, C=233.426
Xylenes (mixed isomers)						0.0944	0.0703	0.1253	106.1700	0.0025	0.0005	106.17	Option 2: A=7.009, B=1462.266, C=215.11
100,000ppm VOC (10%) HEP Shalewater	Nov	55.53	49.19	61.88	57.22	0.2704	0.2186	0.3330	30.8044			21.94	
Benzene						1.0304	0.8585	1.2301	78.1100	0.0025	0.0068	78.11	Option 2: A=6.905, B=1211.033, C=220.79
Ethylbenzene						0.0927	0.0737	0.1158	106.1700	0.0025	0.0006	106.17	Option 2: A=6.975, B=1424.255, C=213.21
Gasoline (RVP 6)						2.6722	2.3326	3.0511	69.0000	0.0900	0.4752	92.00	Option 4: RVP=6, ASTM Slope=3
Toluene						0.2868	0.2337	0.3500	92.1300	0.0025	0.0019	92.13	Option 2: A=6.954, B=1344.8, C=219.48
Water						0.2172	0.1718	0.2728	20.2300	0.9000	0.5150	20.23	Option 2: A=8.07131, B=1730.63, C=233.426
Xylenes (mixed isomers)						0.0771	0.0612	0.0965	106.1700	0.0025	0.0005	106.17	Option 2: A=7.009, B=1462.266, C=215.11
100,000ppm VOC (10%) HEP Shalewater	Dec	50.60	45.34	55.85	57.22	0.2293	0.1918	0.2733	31.4433			21.94	
Benzene						0.8945	0.7666	1.0398	78.1100	0.0025	0.0068	78.11	Option 2: A=6.905, B=1211.033, C=220.79
Ethylbenzene						0.0776	0.0639	0.0938	106.1700	0.0025	0.0006	106.17	Option 2: A=6.975, B=1424.255, C=213.21
Gasoline (RVP 6)						2.4049	2.1448	2.6903	69.0000	0.0900	0.4941	92.00	Option 4: RVP=6, ASTM Slope=3
Toluene						0.2447	0.2058	0.2898	92.1300	0.0025	0.0019	92.13	Option 2: A=6.954, B=1344.8, C=219.48
Water						0.1811	0.1485	0.2198	20.2300	0.9000	0.4961	20.23	Option 2: A=8.07131, B=1730.63, C=233.426
Xylenes (mixed isomers)						0.0644	0.0530	0.0780	106.1700	0.0025	0.0005	106.17	Option 2: A=7.009, B=1462.266, C=215.11

TANKS 4.0.9d
Emissions Report - Detail Format
Detail Calculations (AP-42)

ET 1-12 - Horizontal Tank
, West Virginia

Month:	January	February	March	April	May	June	July	August	September	October	November	December
Standing Losses (lb):	2.7752	3.2581	5.3873	7.3351	9.6329	10.8151	10.9053	9.8617	7.6975	5.9380	3.8838	2.6968
Vapor Space Volume (cu ft):	1,626.4495	1,626.4495	1,626.4495	1,626.4495	1,626.4495	1,626.4495	1,626.4495	1,626.4495	1,626.4495	1,626.4495	1,626.4495	1,626.4495
Vapor Density (lb/cu ft):	0.0013	0.0013	0.0016	0.0018	0.0021	0.0023	0.0024	0.0023	0.0021	0.0018	0.0015	0.0013
Vapor Space Expansion Factor:	0.0460	0.0561	0.0720	0.0888	0.1001	0.1056	0.1001	0.0930	0.0825	0.0719	0.0532	0.0427
Vented Vapor Saturation Factor:	0.9536	0.9498	0.9394	0.9287	0.9173	0.9071	0.9037	0.9069	0.9172	0.9316	0.9426	0.9509
Tank Vapor Space Volume:												
Vapor Space Volume (cu ft):	1,626.4495	1,626.4495	1,626.4495	1,626.4495	1,626.4495	1,626.4495	1,626.4495	1,626.4495	1,626.4495	1,626.4495	1,626.4495	1,626.4495
Tank Diameter (ft):	8.5000	8.5000	8.5000	8.5000	8.5000	8.5000	8.5000	8.5000	8.5000	8.5000	8.5000	8.5000
Effective Diameter (ft):	22.0740	22.0740	22.0740	22.0740	22.0740	22.0740	22.0740	22.0740	22.0740	22.0740	22.0740	22.0740
Vapor Space Outage (ft):	4.2500	4.2500	4.2500	4.2500	4.2500	4.2500	4.2500	4.2500	4.2500	4.2500	4.2500	4.2500
Tank Shell Length (ft):	45.0000	45.0000	45.0000	45.0000	45.0000	45.0000	45.0000	45.0000	45.0000	45.0000	45.0000	45.0000
Vapor Density												
Vapor Density (lb/cu ft):	0.0013	0.0013	0.0016	0.0018	0.0021	0.0023	0.0024	0.0023	0.0021	0.0018	0.0015	0.0013
Vapor Molecular Weight (lb/lb-mole):	31.6820	31.3509	30.5895	29.9611	29.4188	29.0030	28.8776	28.9956	29.4108	30.1192	30.8044	31.4433
Vapor Pressure at Daily Average Liquid Surface Temperature (psia):	0.2160	0.2347	0.2864	0.3411	0.4001	0.4548	0.4733	0.4559	0.4010	0.3261	0.2704	0.2293
Daily Avg. Liquid Surface Temp. (deg. R):	508.5095	510.9624	516.9429	522.2886	527.2494	531.3037	532.5737	531.3788	527.3254	520.9055	515.2035	510.2689
Daily Average Ambient Temp. (deg. F):	32.1000	35.5000	45.8500	54.8000	63.5000	71.4500	75.0500	73.9000	67.6500	56.2000	46.8000	37.0000
Ideal Gas Constant R (psia cuft / (lb-mol-deg R)):	10.731	10.731	10.731	10.731	10.731	10.731	10.731	10.731	10.731	10.731	10.731	10.731
Liquid Bulk Temperature (deg. R):	516.8933	516.8933	516.8933	516.8933	516.8933	516.8933	516.8933	516.8933	516.8933	516.8933	516.8933	516.8933
Tank Paint Solar Absorptance (Shell):	0.5400	0.5400	0.5400	0.5400	0.5400	0.5400	0.5400	0.5400	0.5400	0.5400	0.5400	0.5400
Daily Total Solar Insulation Factor (Btu/sqft day):	625.9737	850.2836	1,184.6862	1,514.6470	1,780.2020	1,910.5999	1,836.9933	1,675.5029	1,369.9719	1,046.0392	678.9578	533.0136
Vapor Space Expansion Factor												
Vapor Space Expansion Factor:	0.0460	0.0561	0.0720	0.0888	0.1001	0.1056	0.1001	0.0930	0.0825	0.0719	0.0532	0.0427
Daily Vapor Temperature Range (deg. R):	22.5687	26.9683	33.5365	40.1815	44.1967	45.6643	43.1113	40.4536	36.7700	33.0961	25.3858	21.0192
Daily Vapor Pressure Range (psia):	0.0830	0.1071	0.1598	0.2248	0.2858	0.3313	0.3236	0.2932	0.2373	0.1772	0.1144	0.0815
Breather Vent Press. Setting Range(psia):	0.0600	0.0600	0.0600	0.0600	0.0600	0.0600	0.0600	0.0600	0.0600	0.0600	0.0600	0.0600
Vapor Pressure at Daily Average Liquid Surface Temperature (psia):	0.2160	0.2347	0.2864	0.3411	0.4001	0.4548	0.4733	0.4559	0.4010	0.3261	0.2704	0.2293
Vapor Pressure at Daily Minimum Liquid Surface Temperature (psia):	0.1781	0.1866	0.2164	0.2450	0.2795	0.3155	0.3357	0.3299	0.2978	0.2482	0.2186	0.1918
Vapor Pressure at Daily Maximum Liquid Surface Temperature (psia):	0.2611	0.2937	0.3762	0.4698	0.5653	0.6468	0.6593	0.6232	0.5351	0.4254	0.3330	0.2733
Daily Avg. Liquid Surface Temp. (deg R):	508.5095	510.9624	516.9429	522.2886	527.2494	531.3037	532.5737	531.3788	527.3254	520.9055	515.2035	510.2689
Daily Min. Liquid Surface Temp. (deg R):	502.8673	504.2203	508.5588	512.2432	516.2002	519.8876	521.7958	521.2654	518.1329	512.6314	508.8570	505.0141
Daily Max. Liquid Surface Temp. (deg R):	514.1517	517.7044	525.3271	532.3339	538.2986	542.7198	543.3515	541.4922	536.5179	529.1795	521.5500	515.5237
Daily Ambient Temp. Range (deg. R):	18.2000	19.6000	21.7000	24.0000	24.0000	23.3000	21.3000	21.0000	22.3000	24.0000	21.0000	18.0000
Vented Vapor Saturation Factor												
Vented Vapor Saturation Factor:	0.9536	0.9498	0.9394	0.9287	0.9173	0.9071	0.9037	0.9069	0.9172	0.9316	0.9426	0.9509
Vapor Pressure at Daily Average Liquid Surface Temperature (psia):	0.2160	0.2347	0.2864	0.3411	0.4001	0.4548	0.4733	0.4559	0.4010	0.3261	0.2704	0.2293
Vapor Space Outage (ft):	4.2500	4.2500	4.2500	4.2500	4.2500	4.2500	4.2500	4.2500	4.2500	4.2500	4.2500	4.2500
Working Losses (lb):	35.8398	38.5268	45.8757	53.5138	61.6280	69.0778	71.5750	69.2232	61.7605	51.4330	43.6152	37.7489
Vapor Molecular Weight (lb/lb-mole):	31.6820	31.3509	30.5895	29.9611	29.4188	29.0030	28.8776	28.9956	29.4108	30.1192	30.8044	31.4433
Vapor Pressure at Daily Average Liquid Surface Temperature (psia):	0.2160	0.2347	0.2864	0.3411	0.4001	0.4548	0.4733	0.4559	0.4010	0.3261	0.2704	0.2293
Net Throughput (gal/mo.):	1,064,583.3330	1,064,583.3330	1,064,583.3330	1,064,583.3330	1,064,583.3330	1,064,583.3330	1,064,583.3330	1,064,583.3330	1,064,583.3330	1,064,583.3330	1,064,583.3330	1,064,583.3330
Annual Turnovers:	751.4706	751.4706	751.4706	751.4706	751.4706	751.4706	751.4706	751.4706	751.4706	751.4706	751.4706	751.4706
Turnover Factor:	0.2066	0.2066	0.2066	0.2066	0.2066	0.2066	0.2066	0.2066	0.2066	0.2066	0.2066	0.2066

Tank Diameter (ft):	8.5000	8.5000	8.5000	8.5000	8.5000	8.5000	8.5000	8.5000	8.5000	8.5000	8.5000	8.5000
Working Loss Product Factor:	1.0000	1.0000	1.0000	1.0000	1.0000	1.0000	1.0000	1.0000	1.0000	1.0000	1.0000	1.0000
Total Losses (lb):	38.6150	41.7849	51.2630	60.8489	71.2608	79.8929	82.4803	79.0849	69.4580	57.3710	47.2990	40.4457

TANKS 4.0.9d
Emissions Report - Detail Format
Individual Tank Emission Totals

Emissions Report for: January, February, March, April, May, June, July, August, September, October, November, December

ET 1-12 - Horizontal Tank
, West Virginia

	Losses(lbs)		
Components	Working Loss	Breathing Loss	Total Emissions
100,000ppm VOC (10%) HEP Shalewater	639.82	79.99	719.80
Benzene	4.30	0.54	4.83
Ethylbenzene	0.41	0.05	0.46
Gasoline (RVP 6)	285.64	35.20	320.83
Toluene	1.23	0.15	1.38
Water	347.90	44.01	391.91
Xylenes (mixed isomers)	0.34	0.04	0.38

TANKS 4.0.9d
Emissions Report - Detail Format
Tank Indentification and Physical Characteristics

Identification
User Identification: S1 1-2
City: West Virginia
State: HEP Shalewater Solutions LLC.
Company: Horizontal Tank
Type of Tank: 2 - 21,000gal Sludge Influent Tanks
Description:

Tank Dimensions
Shell Length (ft): 45.00
Diameter (ft): 8.50
Volume (gallons): 20,000.00
Turnovers: 753.47
Net Throughput(gal/yr): 15,069,390.00
Is Tank Heated (y/n): N
Is Tank Underground (y/n): N

Paint Characteristics
Shell Color/Shade: Gray/Light
Shell Condition Good

Breather Vent Settings
Vacuum Settings (psig): -0.03
Pressure Settings (psig) 0.03

Meterological Data used in Emissions Calculations: Charleston, West Virginia (Avg Atmospheric Pressure = 14.25 psia)

TANKS 4.0.9d
Emissions Report - Detail Format
Liquid Contents of Storage Tank

S1 1-2 - Horizontal Tank
, West Virginia

Mixture/Component	Month	Daily Liquid Surf. Temperature (deg F) Avg.	Min.	Max.	Liquid Bulk Temp (deg F)	Vapor Pressure (psia) Avg.	Min.	Max.	Vapor Mol. Weight.	Liquid Mass Fract.	Vapor Mass Fract.	Mol. Weight	Basis for Vapor Pressure Calculations
100,000ppm VOC MW22 Shalewater	All	61.57	52.97	70.18	57.22	0.3297	0.2483	0.4344	30.0803			21.94	
Benzene						1.2197	0.9578	1.5385	78.1100	0.0025	0.0067	78.11	Option 2: A=6.905, B=1211.033, C=220.79
Ethylbenzene						0.1146	0.0846	0.1534	106.1700	0.0025	0.0006	106.17	Option 2: A=6.975, B=1424.255, C=213.21
Gasoline (RVP 6)						3.0318	2.5304	3.6112	69.0000	0.0900	0.4528	92.00	Option 4: RVP=6, ASTM Slope=3
Toluene						0.3466	0.2642	0.4499	92.1300	0.0025	0.0019	92.13	Option 2: A=6.954, B=1344.8, C=219.48
Water						0.2699	0.1977	0.3641	20.2300	0.9000	0.5374	20.23	Option 2: A=8.07131, B=1730.63, C=233.426
Xylenes (mixed isomers)						0.0955	0.0703	0.1281	106.1700	0.0025	0.0005	106.17	Option 2: A=7.009, B=1462.266, C=215.11

TANKS 4.0.9d
Emissions Report - Detail Format
Detail Calculations (AP-42)

S1 1-2 - Horizontal Tank
, West Virginia

Annual Emission Calcaulations	
Standing Losses (lb):	73.5666
Vapor Space Volume (cu ft):	1,626.4495
Vapor Density (lb/cu ft):	0.0018
Vapor Space Expansion Factor:	0.0751
Vented Vapor Saturation Factor:	0.9309
Tank Vapor Space Volume:	
Vapor Space Volume (cu ft):	1,626.4495
Tank Diameter (ft):	8.5000
Effective Diameter (ft):	22.0740
Vapor Space Outage (ft):	4.2500
Tank Shell Length (ft):	45.0000
Vapor Density	
Vapor Density (lb/cu ft):	0.0018
Vapor Molecular Weight (lb/lb-mole):	30.0803
Vapor Pressure at Daily Average Liquid Surface Temperature (psia):	0.3297
Daily Avg. Liquid Surface Temp. (deg. R):	521.2427
Daily Average Ambient Temp. (deg. F):	54.9833
Ideal Gas Constant R (psia cuft / (lb-mol-deg R)):	10.731
Liquid Bulk Temperature (deg. R):	516.8933
Tank Paint Solar Absorptance (Shell):	0.5400
Daily Total Solar Insulation Factor (Btu/sqft day):	1,250.5726
Vapor Space Expansion Factor	
Vapor Space Expansion Factor:	0.0751
Daily Vapor Temperature Range (deg. R):	34.4127
Daily Vapor Pressure Range (psia):	0.1862
Breather Vent Press. Setting Range(psia):	0.0600
Vapor Pressure at Daily Average Liquid Surface Temperature (psia):	0.3297
Vapor Pressure at Daily Minimum Liquid Surface Temperature (psia):	0.2483
Vapor Pressure at Daily Maximum Liquid Surface Temperature (psia):	0.4344
Daily Avg. Liquid Surface Temp. (deg R):	521.2427
Daily Min. Liquid Surface Temp. (deg R):	512.6395
Daily Max. Liquid Surface Temp. (deg R):	529.8458
Daily Ambient Temp. Range (deg. R):	21.5333
Vented Vapor Saturation Factor	
Vented Vapor Saturation Factor:	0.9309
Vapor Pressure at Daily Average Liquid: Surface Temperature (psia):	0.3297
Vapor Space Outage (ft):	4.2500
Working Losses (lb):	734.7503
Vapor Molecular Weight (lb/lb-mole):	30.0803
Vapor Pressure at Daily Average Liquid Surface Temperature (psia):	0.3297
Annual Net Throughput (gal/yr.):	15,069,390.0000
Annual Turnovers:	753.4695
Turnover Factor:	0.2065

Tank Diameter (ft):	8.5000
Working Loss Product Factor:	1.0000
Total Losses (lb):	808.3169

TANKS 4.0.9d
Emissions Report - Detail Format
Individual Tank Emission Totals

Emissions Report for: Annual

S1 1-2 - Horizontal Tank
, West Virginia

	Losses(lbs)		
Components	Working Loss	Breathing Loss	Total Emissions
100,000ppm VOC MW22 Shalewater	734.75	73.57	808.32
Gasoline (RVP 6)	332.68	33.31	365.99
Water	394.85	39.53	434.38
Benzene	4.96	0.50	5.45
Ethylbenzene	0.47	0.05	0.51
Toluene	1.41	0.14	1.55
Xylenes (mixed isomers)	0.39	0.04	0.43

TANKS 4.0.9d
Emissions Report - Detail Format
Tank Indentification and Physical Characteristics

Identification

User Identification:	FT 1
City:	
State:	West Virginia
Company:	HEP Shalewater Solutions LLC.
Type of Tank:	Horizontal Tank
Description:	1 - 21,000gal Filter Tank (closed-roof frac tanks)

Tank Dimensions

Shell Length (ft):	45.00
Diameter (ft):	8.50
Volume (gallons):	20,000.00
Turnovers:	452.08
Net Throughput(gal/yr):	9,041,634.00
Is Tank Heated (y/n):	N
Is Tank Underground (y/n):	N

Paint Characteristics

Shell Color/Shade:	Gray/Light
Shell Condition	Good

Breather Vent Settings

Vacuum Settings (psig):	-0.03
Pressure Settings (psig)	0.03

Meterological Data used in Emissions Calculations: Charleston, West Virginia (Avg Atmospheric Pressure = 14.25 psia)

TANKS 4.0.9d
Emissions Report - Detail Format
Liquid Contents of Storage Tank

FT 1 - Horizontal Tank
, West Virginia

Mixture/Component	Month	Daily Liquid Surf. Temperature (deg F) Avg.	Min.	Max.	Liquid Bulk Temp (deg F)	Vapor Pressure (psia) Avg.	Min.	Max.	Vapor Mol. Weight.	Liquid Mass Fract.	Vapor Mass Fract.	Mol. Weight	Basis for Vapor Pressure Calculations
100,000ppm VOC MW22 Shalewater	All	61.57	52.97	70.18	57.22	0.3297	0.2483	0.4344	30.0803			21.94	
Benzene						1.2197	0.9578	1.5385	78.1100	0.0025	0.0067	78.11	Option 2: A=6.905, B=1211.033, C=220.79
Ethylbenzene						0.1146	0.0846	0.1534	106.1700	0.0025	0.0006	106.17	Option 2: A=6.975, B=1424.255, C=213.21
Gasoline (RVP 6)						3.0318	2.5304	3.6112	69.0000	0.0900	0.4528	92.00	Option 4: RVP=6, ASTM Slope=3
Toluene						0.3466	0.2642	0.4499	92.1300	0.0025	0.0019	92.13	Option 2: A=6.954, B=1344.8, C=219.48
Water						0.2699	0.1977	0.3641	20.2300	0.9000	0.5374	20.23	Option 2: A=8.07131, B=1730.63, C=233.426
Xylenes (mixed isomers)						0.0955	0.0703	0.1281	106.1700	0.0025	0.0005	106.17	Option 2: A=7.009, B=1462.266, C=215.11

TANKS 4.0.9d
Emissions Report - Detail Format
Detail Calculations (AP-42)

FT 1 - Horizontal Tank
, West Virginia

Annual Emission Calcaulations	
Standing Losses (lb):	73.5666
Vapor Space Volume (cu ft):	1,626.4495
Vapor Density (lb/cu ft):	0.0018
Vapor Space Expansion Factor:	0.0751
Vented Vapor Saturation Factor:	0.9309
Tank Vapor Space Volume:	
Vapor Space Volume (cu ft):	1,626.4495
Tank Diameter (ft):	8.5000
Effective Diameter (ft):	22.0740
Vapor Space Outage (ft):	4.2500
Tank Shell Length (ft):	45.0000
Vapor Density	
Vapor Density (lb/cu ft):	0.0018
Vapor Molecular Weight (lb/lb-mole):	30.0803
Vapor Pressure at Daily Average Liquid Surface Temperature (psia):	0.3297
Daily Avg. Liquid Surface Temp. (deg. R):	521.2427
Daily Average Ambient Temp. (deg. F):	54.9833
Ideal Gas Constant R (psia cuft / (lb-mol-deg R)):	10.731
Liquid Bulk Temperature (deg. R):	516.8933
Tank Paint Solar Absorptance (Shell):	0.5400
Daily Total Solar Insulation Factor (Btu/sqft day):	1,250.5726
Vapor Space Expansion Factor	
Vapor Space Expansion Factor:	0.0751
Daily Vapor Temperature Range (deg. R):	34.4127
Daily Vapor Pressure Range (psia):	0.1862
Breather Vent Press. Setting Range(psia):	0.0600
Vapor Pressure at Daily Average Liquid Surface Temperature (psia):	0.3297
Vapor Pressure at Daily Minimum Liquid Surface Temperature (psia):	0.2483
Vapor Pressure at Daily Maximum Liquid Surface Temperature (psia):	0.4344
Daily Avg. Liquid Surface Temp. (deg R):	521.2427
Daily Min. Liquid Surface Temp. (deg R):	512.6395
Daily Max. Liquid Surface Temp. (deg R):	529.8458
Daily Ambient Temp. Range (deg. R):	21.5333
Vented Vapor Saturation Factor	
Vented Vapor Saturation Factor:	0.9309
Vapor Pressure at Daily Average Liquid: Surface Temperature (psia):	0.3297
Vapor Space Outage (ft):	4.2500
Working Losses (lb):	497.5227
Vapor Molecular Weight (lb/lb-mole):	30.0803
Vapor Pressure at Daily Average Liquid Surface Temperature (psia):	0.3297
Annual Net Throughput (gal/yr.):	9,041,634.0000
Annual Turnovers:	452.0817
Turnover Factor:	0.2330

Tank Diameter (ft):	8.5000
Working Loss Product Factor:	1.0000
Total Losses (lb):	571.0892

TANKS 4.0.9d
Emissions Report - Detail Format
Individual Tank Emission Totals

Emissions Report for: Annual

FT 1 - Horizontal Tank
, West Virginia

	Losses(lbs)		
Components	Working Loss	Breathing Loss	Total Emissions
100,000ppm VOC MW22 Shalewater	497.52	73.57	571.09
Gasoline (RVP 6)	225.27	33.31	258.58
Benzene	3.36	0.50	3.85
Ethylbenzene	0.32	0.05	0.36
Toluene	0.95	0.14	1.10
Xylenes (mixed isomers)	0.26	0.04	0.30
Water	267.36	39.53	306.90

TANKS 4.0.9d
Emissions Report - Detail Format
Tank Indentification and Physical Characteristics

Identification

User Identification:	Brine Mixing Tank
City:	Charleston
State:	West Virginia
Company:	HEP Shalewater Solutions, LLC.
Type of Tank:	Horizontal Tank
Description:	1 - 90bbl Brine Mixing Tank

Tank Dimensions

Shell Length (ft):	10.00
Diameter (ft):	7.00
Volume (gallons):	3,000.00
Turnovers:	120.00
Net Throughput(gal/yr):	360,000.00
Is Tank Heated (y/n):	N
Is Tank Underground (y/n):	N

Paint Characteristics

Shell Color/Shade:	White/White
Shell Condition	Good

Breather Vent Settings

Vacuum Settings (psig):	0.00
Pressure Settings (psig)	0.00

Meterological Data used in Emissions Calculations: Charleston, West Virginia (Avg Atmospheric Pressure = 14.25 psia)

TANKS 4.0.9d
Emissions Report - Detail Format
Liquid Contents of Storage Tank

Brine Mixing Tank - Horizontal Tank
Charleston, West Virginia

Mixture/Component	Month	Daily Liquid Surf. Temperature (deg F) Avg.	Min.	Max.	Liquid Bulk Temp (deg F)	Vapor Pressure (psia) Avg.	Min.	Max.	Vapor Mol. Weight.	Liquid Mass Fract.	Vapor Mass Fract.	Mol. Weight	Basis for Vapor Pressure Calculations
100,000 ppm VOC	Jan	45.77	41.75	49.79	55.00	0.1946	0.1694	0.2231	32.1130			21.94	
Benzene						0.7763	0.6881	0.8737	78.1100	0.0025	0.0068	78.11	Option 2: A=6.905, B=1211.033, C=220.79
Ethylbenzene						0.0650	0.0558	0.0754	106.1700	0.0025	0.0006	106.17	Option 2: A=6.975, B=1424.255, C=213.21
Gasoline (RVP 6)						2.1648	1.9803	2.3631	69.0000	0.0900	0.5132	92.00	Option 4: RVP=6, ASTM Slope=3
Toluene						0.2087	0.1823	0.2383	92.1300	0.0025	0.0018	92.13	Option 2: A=6.954, B=1344.8, C=219.48
Water						0.1510	0.1293	0.1757	20.2300	0.9000	0.4771	20.23	Option 2: A=8.07131, B=1730.63, C=233.426
Xylenes (mixed isomers)						0.0538	0.0462	0.0625	106.1700	0.0025	0.0005	106.17	Option 2: A=7.009, B=1462.266, C=215.11
100,000 ppm VOC	Feb	47.56	43.02	52.10	55.00	0.2069	0.1771	0.2412	31.8587			21.94	
Benzene						0.8186	0.7152	0.9343	78.1100	0.0025	0.0068	78.11	Option 2: A=6.905, B=1211.033, C=220.79
Ethylbenzene						0.0695	0.0586	0.0820	106.1700	0.0025	0.0006	106.17	Option 2: A=6.975, B=1424.255, C=213.21
Gasoline (RVP 6)						2.2517	2.0375	2.4840	69.0000	0.0900	0.5060	92.00	Option 4: RVP=6, ASTM Slope=3
Toluene						0.2215	0.1903	0.2570	92.1300	0.0025	0.0018	92.13	Option 2: A=6.954, B=1344.8, C=219.48
Water						0.1616	0.1359	0.1915	20.2300	0.9000	0.4843	20.23	Option 2: A=8.07131, B=1730.63, C=233.426
Xylenes (mixed isomers)						0.0576	0.0485	0.0681	106.1700	0.0025	0.0005	106.17	Option 2: A=7.009, B=1462.266, C=215.11
100,000 ppm VOC	Mar	52.57	47.25	57.88	55.00	0.2449	0.2047	0.2922	31.1832			21.94	
Benzene						0.9468	0.8111	1.1009	78.1100	0.0025	0.0068	78.11	Option 2: A=6.905, B=1211.033, C=220.79
Ethylbenzene						0.0834	0.0687	0.1008	106.1700	0.0025	0.0006	106.17	Option 2: A=6.975, B=1424.255, C=213.21
Gasoline (RVP 6)						2.5088	2.2364	2.8077	69.0000	0.0900	0.4865	92.00	Option 4: RVP=6, ASTM Slope=3
Toluene						0.2608	0.2192	0.3090	92.1300	0.0025	0.0019	92.13	Option 2: A=6.954, B=1344.8, C=219.48
Water						0.1948	0.1597	0.2365	20.2300	0.9000	0.5037	20.23	Option 2: A=8.07131, B=1730.63, C=233.426
Xylenes (mixed isomers)						0.0693	0.0569	0.0839	106.1700	0.0025	0.0005	106.17	Option 2: A=7.009, B=1462.266, C=215.11
100,000 ppm VOC	Apr	56.95	50.83	63.07	55.00	0.2833	0.2310	0.3461	30.6293			21.94	
Benzene						1.0724	0.9004	1.2709	78.1100	0.0025	0.0068	78.11	Option 2: A=6.905, B=1211.033, C=220.79
Ethylbenzene						0.0975	0.0783	0.1207	106.1700	0.0025	0.0006	106.17	Option 2: A=6.975, B=1424.255, C=213.21
Gasoline (RVP 6)						2.7531	2.4167	3.1268	69.0000	0.0900	0.4699	92.00	Option 4: RVP=6, ASTM Slope=3
Toluene						0.3000	0.2465	0.3630	92.1300	0.0025	0.0019	92.13	Option 2: A=6.954, B=1344.8, C=219.48
Water						0.2287	0.1826	0.2845	20.2300	0.9000	0.5203	20.23	Option 2: A=8.07131, B=1730.63, C=233.426
Xylenes (mixed isomers)						0.0811	0.0650	0.1006	106.1700	0.0025	0.0005	106.17	Option 2: A=7.009, B=1462.266, C=215.11
100,000 ppm VOC	May	61.13	54.69	67.57	55.00	0.3250	0.2630	0.3999	30.1310			21.94	
Benzene						1.2050	1.0062	1.4355	78.1100	0.0025	0.0068	78.11	Option 2: A=6.905, B=1211.033, C=220.79
Ethylbenzene						0.1129	0.0900	0.1406	106.1700	0.0025	0.0006	106.17	Option 2: A=6.975, B=1424.255, C=213.21
Gasoline (RVP 6)						3.0043	2.6251	3.4271	69.0000	0.0900	0.4544	92.00	Option 4: RVP=6, ASTM Slope=3
Toluene						0.3420	0.2793	0.4162	92.1300	0.0025	0.0019	92.13	Option 2: A=6.954, B=1344.8, C=219.48
Water						0.2657	0.2107	0.3329	20.2300	0.9000	0.5358	20.23	Option 2: A=8.07131, B=1730.63, C=233.426
Xylenes (mixed isomers)						0.0940	0.0748	0.1174	106.1700	0.0025	0.0005	106.17	Option 2: A=7.009, B=1462.266, C=215.11
100,000 ppm VOC	Jun	64.81	58.34	71.27	55.00	0.3661	0.2966	0.4497	29.7173			21.94	
Benzene						1.3324	1.1151	1.5837	78.1100	0.0025	0.0067	78.11	Option 2: A=6.905, B=1211.033, C=220.79
Ethylbenzene						0.1281	0.1024	0.1590	106.1700	0.0025	0.0006	106.17	Option 2: A=6.975, B=1424.255, C=213.21
Gasoline (RVP 6)						3.2400	2.8346	3.6912	69.0000	0.0900	0.4411	92.00	Option 4: RVP=6, ASTM Slope=3
Toluene						0.3828	0.3134	0.4647	92.1300	0.0025	0.0019	92.13	Option 2: A=6.954, B=1344.8, C=219.48
Water						0.3024	0.2404	0.3779	20.2300	0.9000	0.5490	20.23	Option 2: A=8.07131, B=1730.63, C=233.426
Xylenes (mixed isomers)						0.1068	0.0852	0.1329	106.1700	0.0025	0.0005	106.17	Option 2: A=7.009, B=1462.266, C=215.11
100,000 ppm VOC	Jul	66.29	60.27	72.31	55.00	0.3839	0.3160	0.4646	29.5560			21.94	
Benzene						1.3869	1.1767	1.6274	78.1100	0.0025	0.0067	78.11	Option 2: A=6.905, B=1211.033, C=220.79

Ethylbenzene						0.1347	0.1096	0.1645	106.1700	0.0025	0.0007	106.17	Option 2: A=6.975, B=1424.255, C=213.21
Gasoline (RVP 6)						3.3394	2.9511	3.7681	69.0000	0.0900	0.4359	92.00	Option 4: RVP=6, ASTM Slope=3
Toluene						0.4004	0.3329	0.4792	92.1300	0.0025	0.0019	92.13	Option 2: A=6.954, B=1344.8, C=219.48
Water						0.3185	0.2577	0.3915	20.2300	0.9000	0.5543	20.23	Option 2: A=8.07131, B=1730.63, C=233.426
Xylenes (mixed isomers)						0.1124	0.0912	0.1376	106.1700	0.0025	0.0005	106.17	Option 2: A=7.009, B=1462.266, C=215.11
100,000 ppm VOC	Aug	65.57	59.79	71.34	55.00	0.3751	0.3111	0.4507	29.6341			21.94	
Benzene						1.3602	1.1612	1.5865	78.1100	0.0025	0.0067	78.11	Option 2: A=6.905, B=1211.033, C=220.79
Ethylbenzene						0.1314	0.1078	0.1594	106.1700	0.0025	0.0006	106.17	Option 2: A=6.975, B=1424.255, C=213.21
Gasoline (RVP 6)						3.2907	2.9220	3.6963	69.0000	0.0900	0.4384	92.00	Option 4: RVP=6, ASTM Slope=3
Toluene						0.3918	0.3280	0.4657	92.1300	0.0025	0.0019	92.13	Option 2: A=6.954, B=1344.8, C=219.48
Water						0.3106	0.2533	0.3788	20.2300	0.9000	0.5517	20.23	Option 2: A=8.07131, B=1730.63, C=233.426
Xylenes (mixed isomers)						0.1096	0.0897	0.1332	106.1700	0.0025	0.0005	106.17	Option 2: A=7.009, B=1462.266, C=215.11
100,000 ppm VOC	Sep	62.41	56.76	68.05	55.00	0.3388	0.2816	0.4061	29.9850			21.94	
Benzene						1.2480	1.0669	1.4540	78.1100	0.0025	0.0067	78.11	Option 2: A=6.905, B=1211.033, C=220.79
Ethylbenzene						0.1180	0.0969	0.1429	106.1700	0.0025	0.0006	106.17	Option 2: A=6.975, B=1424.255, C=213.21
Gasoline (RVP 6)						3.0845	2.7425	3.4605	69.0000	0.0900	0.4498	92.00	Option 4: RVP=6, ASTM Slope=3
Toluene						0.3557	0.2983	0.4222	92.1300	0.0025	0.0019	92.13	Option 2: A=6.954, B=1344.8, C=219.48
Water						0.2780	0.2271	0.3385	20.2300	0.9000	0.5404	20.23	Option 2: A=8.07131, B=1730.63, C=233.426
Xylenes (mixed isomers)						0.0983	0.0806	0.1193	106.1700	0.0025	0.0005	106.17	Option 2: A=7.009, B=1462.266, C=215.11
100,000 ppm VOC	Oct	56.93	51.37	62.50	55.00	0.2832	0.2353	0.3398	30.6309			21.94	
Benzene						1.0720	0.9147	1.2512	78.1100	0.0025	0.0068	78.11	Option 2: A=6.905, B=1211.033, C=220.79
Ethylbenzene						0.0975	0.0799	0.1183	106.1700	0.0025	0.0006	106.17	Option 2: A=6.975, B=1424.255, C=213.21
Gasoline (RVP 6)						2.7524	2.4452	3.0903	69.0000	0.0900	0.4699	92.00	Option 4: RVP=6, ASTM Slope=3
Toluene						0.2999	0.2509	0.3567	92.1300	0.0025	0.0019	92.13	Option 2: A=6.954, B=1344.8, C=219.48
Water						0.2286	0.1864	0.2789	20.2300	0.9000	0.5203	20.23	Option 2: A=8.07131, B=1730.63, C=233.426
Xylenes (mixed isomers)						0.0811	0.0663	0.0986	106.1700	0.0025	0.0005	106.17	Option 2: A=7.009, B=1462.266, C=215.11
100,000 ppm VOC	Nov	52.31	47.72	56.89	55.00	0.2428	0.2080	0.2828	31.2173			21.94	
Benzene						0.9397	0.8224	1.0708	78.1100	0.0025	0.0068	78.11	Option 2: A=6.905, B=1211.033, C=220.79
Ethylbenzene						0.0826	0.0698	0.0973	106.1700	0.0025	0.0006	106.17	Option 2: A=6.975, B=1424.255, C=213.21
Gasoline (RVP 6)						2.4948	2.2593	2.7500	69.0000	0.0900	0.4875	92.00	Option 4: RVP=6, ASTM Slope=3
Toluene						0.2586	0.2226	0.2995	92.1300	0.0025	0.0019	92.13	Option 2: A=6.954, B=1344.8, C=219.48
Water						0.1929	0.1626	0.2282	20.2300	0.9000	0.5027	20.23	Option 2: A=8.07131, B=1730.63, C=233.426
Xylenes (mixed isomers)						0.0686	0.0579	0.0810	106.1700	0.0025	0.0005	106.17	Option 2: A=7.009, B=1462.266, C=215.11
100,000 ppm VOC	Dec	47.80	43.92	51.67	55.00	0.2085	0.1826	0.2377	31.8260			21.94	
Benzene						0.8243	0.7348	0.9227	78.1100	0.0025	0.0068	78.11	Option 2: A=6.905, B=1211.033, C=220.79
Ethylbenzene						0.0701	0.0606	0.0807	106.1700	0.0025	0.0006	106.17	Option 2: A=6.975, B=1424.255, C=213.21
Gasoline (RVP 6)						2.2632	2.0785	2.4611	69.0000	0.0900	0.5051	92.00	Option 4: RVP=6, ASTM Slope=3
Toluene						0.2232	0.1962	0.2534	92.1300	0.0025	0.0018	92.13	Option 2: A=6.954, B=1344.8, C=219.48
Water						0.1630	0.1407	0.1885	20.2300	0.9000	0.4852	20.23	Option 2: A=8.07131, B=1730.63, C=233.426
Xylenes (mixed isomers)						0.0581	0.0502	0.0670	106.1700	0.0025	0.0005	106.17	Option 2: A=7.009, B=1462.266, C=215.11

TANKS 4.0.9d
Emissions Report - Detail Format
Detail Calculations (AP-42)

Brine Mixing Tank - Horizontal Tank
Charleston, West Virginia

Month:	January	February	March	April	May	June	July	August	September	October	November	December
Standing Losses (lb):	0.3011	0.3230	0.4824	0.6086	0.7445	0.8032	0.8057	0.7570	0.6547	0.5713	0.3999	0.3072
Vapor Space Volume (cu ft):	245.1243	245.1243	245.1243	245.1243	245.1243	245.1243	245.1243	245.1243	245.1243	245.1243	245.1243	245.1243
Vapor Density (lb/cu ft):	0.0012	0.0012	0.0014	0.0016	0.0018	0.0019	0.0020	0.0020	0.0018	0.0016	0.0014	0.0012
Vapor Space Expansion Factor:	0.0356	0.0404	0.0478	0.0556	0.0593	0.0603	0.0565	0.0540	0.0522	0.0506	0.0412	0.0345
Vented Vapor Saturation Factor:	0.9652	0.9630	0.9565	0.9501	0.9431	0.9364	0.9335	0.9349	0.9409	0.9501	0.9569	0.9628
Tank Vapor Space Volume:												
Vapor Space Volume (cu ft):	245.1243	245.1243	245.1243	245.1243	245.1243	245.1243	245.1243	245.1243	245.1243	245.1243	245.1243	245.1243
Tank Diameter (ft):	7.0000	7.0000	7.0000	7.0000	7.0000	7.0000	7.0000	7.0000	7.0000	7.0000	7.0000	7.0000
Effective Diameter (ft):	9.4431	9.4431	9.4431	9.4431	9.4431	9.4431	9.4431	9.4431	9.4431	9.4431	9.4431	9.4431
Vapor Space Outage (ft):	3.5000	3.5000	3.5000	3.5000	3.5000	3.5000	3.5000	3.5000	3.5000	3.5000	3.5000	3.5000
Tank Shell Length (ft):	10.0000	10.0000	10.0000	10.0000	10.0000	10.0000	10.0000	10.0000	10.0000	10.0000	10.0000	10.0000
Vapor Density												
Vapor Density (lb/cu ft):	0.0012	0.0012	0.0014	0.0016	0.0018	0.0019	0.0020	0.0020	0.0018	0.0016	0.0014	0.0012
Vapor Molecular Weight (lb/lb-mole):	32.1130	31.8587	31.1832	30.6293	30.1310	29.7173	29.5560	29.6341	29.9850	30.6309	31.2173	31.8260
Vapor Pressure at Daily Average Liquid Surface Temperature (psia):	0.1946	0.2069	0.2449	0.2833	0.3250	0.3661	0.3839	0.3751	0.3388	0.2832	0.2428	0.2085
Daily Avg. Liquid Surface Temp. (deg. R):	505.4365	507.2338	512.2369	516.6180	520.8027	524.4758	525.9609	525.2381	522.0777	516.6047	511.9757	507.4677
Daily Average Ambient Temp. (deg. F):	32.1000	35.5000	45.8500	54.8000	63.5000	71.4500	75.0500	73.9000	67.6500	56.2000	46.8000	37.0000
Ideal Gas Constant R (psia cuft / (lb-mol-deg R)):	10.731	10.731	10.731	10.731	10.731	10.731	10.731	10.731	10.731	10.731	10.731	10.731
Liquid Bulk Temperature (deg. R):	514.6733	514.6733	514.6733	514.6733	514.6733	514.6733	514.6733	514.6733	514.6733	514.6733	514.6733	514.6733
Tank Paint Solar Absorptance (Shell):	0.1700	0.1700	0.1700	0.1700	0.1700	0.1700	0.1700	0.1700	0.1700	0.1700	0.1700	0.1700
Daily Total Solar Insulation Factor (Btu/sqft day):	625.9737	850.2836	1,184.6862	1,514.6470	1,780.2020	1,910.5999	1,836.9933	1,675.5029	1,369.9719	1,046.0392	678.9578	533.0136
Vapor Space Expansion Factor												
Vapor Space Expansion Factor:	0.0356	0.0404	0.0478	0.0556	0.0593	0.0603	0.0565	0.0540	0.0522	0.0506	0.0412	0.0345
Daily Vapor Temperature Range (deg. R):	16.0836	18.1593	21.2631	24.4897	25.7538	25.8705	24.0801	23.0954	22.5771	22.2591	18.3518	15.4971
Daily Vapor Pressure Range (psia):	0.0537	0.0641	0.0875	0.1151	0.1370	0.1531	0.1486	0.1396	0.1245	0.1045	0.0749	0.0551
Breather Vent Press. Setting Range(psia):	0.0000	0.0000	0.0000	0.0000	0.0000	0.0000	0.0000	0.0000	0.0000	0.0000	0.0000	0.0000
Vapor Pressure at Daily Average Liquid Surface Temperature (psia):	0.1946	0.2069	0.2449	0.2833	0.3250	0.3661	0.3839	0.3751	0.3388	0.2832	0.2428	0.2085
Vapor Pressure at Daily Minimum Liquid Surface Temperature (psia):	0.1694	0.1771	0.2047	0.2310	0.2630	0.2966	0.3160	0.3111	0.2816	0.2353	0.2080	0.1826
Vapor Pressure at Daily Maximum Liquid Surface Temperature (psia):	0.2231	0.2412	0.2922	0.3461	0.3999	0.4497	0.4646	0.4507	0.4061	0.3398	0.2828	0.2377
Daily Avg. Liquid Surface Temp. (deg R):	505.4365	507.2338	512.2369	516.6180	520.8027	524.4758	525.9609	525.2381	522.0777	516.6047	511.9757	507.4677
Daily Min. Liquid Surface Temp. (deg R):	501.4156	502.6940	506.9211	510.4956	514.3642	518.0082	519.9409	519.4642	516.4335	511.0399	507.3877	503.5934
Daily Max. Liquid Surface Temp. (deg R):	509.4575	511.7736	517.5527	522.7405	527.2411	530.9434	531.9810	531.0119	527.7220	522.1695	516.5637	511.3420
Daily Ambient Temp. Range (deg. R):	18.2000	19.6000	21.7000	24.0000	24.0000	23.3000	21.3000	21.0000	22.3000	24.0000	21.0000	18.0000
Vented Vapor Saturation Factor												
Vented Vapor Saturation Factor:	0.9652	0.9630	0.9565	0.9501	0.9431	0.9364	0.9335	0.9349	0.9409	0.9501	0.9569	0.9628
Vapor Pressure at Daily Average Liquid Surface Temperature (psia):	0.1946	0.2069	0.2449	0.2833	0.3250	0.3661	0.3839	0.3751	0.3388	0.2832	0.2428	0.2085
Vapor Space Outage (ft):	3.5000	3.5000	3.5000	3.5000	3.5000	3.5000	3.5000	3.5000	3.5000	3.5000	3.5000	3.5000
Working Losses (lb):	1.8596	1.9615	2.2732	2.5829	2.9146	3.2375	3.3771	3.3085	3.0232	2.5819	2.2558	1.9752
Vapor Molecular Weight (lb/lb-mole):	32.1130	31.8587	31.1832	30.6293	30.1310	29.7173	29.5560	29.6341	29.9850	30.6309	31.2173	31.8260
Vapor Pressure at Daily Average Liquid Surface Temperature (psia):	0.1946	0.2069	0.2449	0.2833	0.3250	0.3661	0.3839	0.3751	0.3388	0.2832	0.2428	0.2085
Net Throughput (gal/mo.):	30,000.0000	30,000.0000	30,000.0000	30,000.0000	30,000.0000	30,000.0000	30,000.0000	30,000.0000	30,000.0000	30,000.0000	30,000.0000	30,000.0000
Annual Turnovers:	120.0000	120.0000	120.0000	120.0000	120.0000	120.0000	120.0000	120.0000	120.0000	120.0000	120.0000	120.0000
Turnover Factor:	0.4167	0.4167	0.4167	0.4167	0.4167	0.4167	0.4167	0.4167	0.4167	0.4167	0.4167	0.4167

Tank Diameter (ft):	7.0000	7.0000	7.0000	7.0000	7.0000	7.0000	7.0000	7.0000	7.0000	7.0000	7.0000	7.0000
Working Loss Product Factor:	1.0000	1.0000	1.0000	1.0000	1.0000	1.0000	1.0000	1.0000	1.0000	1.0000	1.0000	1.0000
Total Losses (lb):	2.1607	2.2846	2.7555	3.1915	3.6592	4.0408	4.1829	4.0655	3.6780	3.1532	2.6557	2.2824

TANKS 4.0.9d
Emissions Report - Detail Format
Individual Tank Emission Totals

Emissions Report for: January, February, March, April, May, June, July, August, September, October, November, December

Brine Mixing Tank - Horizontal Tank
Charleston, West Virginia

	Losses(lbs)		
Components	Working Loss	Breathing Loss	Total Emissions
100,000 ppm VOC	31.35	6.76	38.11
Benzene	0.21	0.05	0.26
Ethylbenzene	0.02	0.00	0.02
Gasoline (RVP 6)	14.61	3.13	17.74
Toluene	0.06	0.01	0.07
Water	16.43	3.57	20.00
Xylenes (mixed isomers)	0.02	0.00	0.02

Attachment I

Emission Units Table

(includes all emission units and air pollution control devices that will be part of this permit application review, regardless of permitting status)

Emission Unit ID[1]	Emission Point ID[2]	Emission Unit Description	Year Installed/ Modified	Design Capacity	Type[3] and Date of Change	Control Device[4]
ITS1	1E	Influent Storage Tank #1	2016	21,000 GAL	New	NA
ITS2	2E	Influent Storage Tank #2	2016	21,000 GAL	New	NA
ITS3	3E	Influent Storage Tank #3	2016	21,000 GAL	New	NA
ITS4	4E	Influent Storage Tank #4	2016	21,000 GAL	New	NA
ITS5	5E	Influent Storage Tank #5	2016	21,000 GAL	New	NA
ITS6	6E	Influent Storage Tank #6	2016	21,000 GAL	New	NA
ITS7	7E	Influent Storage Tank #7	2016	21,000 GAL	New	NA
ITS8	8E	Influent Storage Tank #8	2016	21,000 GAL	New	NA
ITS9	9E	Influent Storage Tank #9	2016	21,000 GAL	New	NA
ITS10	10E	Influent Storage Tank #10	2016	21,000 GAL	New	NA
ITS11	11E	Influent Storage Tank #11	2016	21,000 GAL	New	NA
ITS12	12E	Influent Storage Tank #12	2016	21,000 GAL	New	NA
ITS13	13E	Influent Storage Tank #13	2016	21,000 GAL	New	NA
ITS14	14E	Influent Storage Tank #14	2016	21,000 GAL	New	NA
ITS15	15E	Influent Storage Tank #15	2016	21,000 GAL	New	NA
ITS16	16E	Influent Storage Tank #16	2016	21,000 GAL	New	NA
W1	17E	Weir Tank #1	2016	21,000 GAL	New	NA
W2	18E	Weir Tank #2	2016	21,000 GAL	New	NA
ST1	19E	Settling Tank #1	2016	21,000 GAL	New	NA
ST2	20E	Settling Tank #2	2016	21,000 GAL	New	NA
ST3	21E	Settling Tank #3	2016	21,000 GAL	New	NA
ST4	22E	Settling Tank #4	2016	21,000 GAL	New	NA

ST5	23E	Settling Tank #5	2016	21,000 GAL	New	NA
ET1	24E	Effluent Tank #1	2016	21,000 GAL	New	NA
ET2	25E	Effluent Tank #2	2016	21,000 GAL	New	NA
ET3	26E	Effluent Tank #3	2016	21,000 GAL	New	NA
ET4	27E	Effluent Tank #4	2016	21,000 GAL	New	NA
ET5	28E	Effluent Tank #5	2016	21,000 GAL	New	NA
ET6	29E	Effluent Tank #6	2016	21,000 GAL	New	NA
ET7	30E	Effluent Tank #7	2016	21,000 GAL	New	NA
ET8	31E	Effluent Tank #8	2016	21,000 GAL	New	NA
ET9	32E	Effluent Tank #9	2016	21,000 GAL	New	NA
ET10	33E	Effluent Tank #10	2016	21,000 GAL	New	NA
ET11	34E	Effluent Tank #11	2016	21,000 GAL	New	NA
ET12	35E	Effluent Tank #12	2016	21,000 GAL	New	NA
SI1	36E	Sludge Influent Tank #1	2016	21,000 GAL	New	NA
SI2	37E	Sludge Influent Tank #2	2016	21,000 GAL	New	NA
FT1	38E	Filtrate Water #1	2016	21,000 GAL	New	NA
BM1	39E	Brine Mixing Tank #1	2016	3,780 GAL	New	NA
W-1	40E	Water Loadout	2016	NA	New	NA
SL-1	41E	Sludge Loadout	2016	NA	New	NA
W-2	42E	Water Load in	2016	NA	New	NA
Unpaved Haul Road	43E	Unpaved Haul Road	2016	NA	New	NA
DT1	44E	Chemical Storage Day Tank 1	2016	300 GAL	New	NA
DT2	45E	Chemical Storage Day Tank 2	2016	300 GAL	New	NA
DT3	46E	Chemical Storage Day Tank 3	2016	300 GAL	New	NA
DT4	47E	Chemical Storage Day Tank 4	2016	300 GAL	New	NA

[1] For Emission Units (or Sources) use the following numbering system:1S, 2S, 3S,... or other appropriate designation.
[2] For Emission Points use the following numbering system:1E, 2E, 3E, ... or other appropriate designation.
[3] New, modification, removal
[4] For Control Devices use the following numbering system: 1C, 2C, 3C,... or other appropriate designation.

Williams, Jerry

From:	Williams, Jerry
Sent:	Friday, May 27, 2016 1:26 PM
To:	Tony Gutta (tgutta@shalewater.com); 'Ryan Hall'; Joyce Gentry (Joyce.gentry@sj-environmental.com)
Cc:	McKeone, Beverly D
Subject:	WV DAQ Permit Application Incomplete for HEP Shalewater Solutions, LLC - Central Station Facility

RE: Application Status: Incomplete
HEP Shalewater Solutions, LLC - Central Station Facility
Permit Application No. R13-3317
Plant ID No. 017-00160

Mr. Gutta,

Your application for a construction permit for an oil and gas water treatment facility was received by this Division on May 6, 2016 and assigned to the writer for review. Upon initial review of said application, it was determined that the application as submitted was incomplete. On May 17, 2016, I attempted to contact Ryan Hall (phone was disconnected), but was able to speak to Joyce Gentry (Steptoe & Johnson) about application deficiencies. Joyce and I met on May 18, 2016 at the DEP headquarters to discuss these issues. Yesterday (May 26, 2016), I received an email from Joyce which included additional information prepared by Hillstone and Hull. I reviewed the information included with the email and believe that a lot of the issues I brought up in the May 18, 2016 were not adequately addressed. Therefore, this permit application is still incomplete based on the following items:

1. The original application indicated the molecular weight of the liquids treated at this facility would be 22 lb/lb-mol. This is representative of the liquids the DAQ has encountered in this area. The liquids being treated at this facility could include produced water, flow back water or contaminated surface water. Therefore, a molecular weight of 22 lb/lb-mol is an acceptable number. The original application included loading emission calculations that utilized this number, but all of the tank calculations were performed with a molecular weight of 19.59 lb/lb-mol. This would not be representative of all samples received at this facility. Yesterday's (5/26) submittal changed the molecular weight of the liquids loading to 19.5 lb/lb-mol to match a calculated molecular weight used in TANKS 4.09 that was not supported with laboratory analysis of an actual sample. The DAQ has stated on several occasions that this number is not representative of produced water samples from that area and is unacceptable for use in performing these calculations.

2. All of the TANKS 4.09d runs used the same fluid mixture. This includes the 16 influent storage tanks, 2 weir tanks, 5 settling tanks, 12 effluent tanks, 2 sludge effluent tanks, 1 filtrate water tank, and 1 brine mixing tank. Please provide a laboratory analysis that would support that each of these tanks which are in different parts of the treatment process would all contain the same fluid mixture. It is still not clear whether or not the fluid composition changes throughout the process.

3. The original application included MSDS for sodium hydroxide, Shale Bind, Shaleclear Marcellus, and Shale Floc. I asked how these would be stored and should be listed on Attachment I, Emission Unit Table. All storage tanks must be identified.

NON-CONFIDENTIAL

4. There are two (2) locations for water loading emissions. This would be the influent water and the effluent water. However, only one (1) emission point for water loading was provided. Please provide both the influent and effluent loading using the appropriate parameters for each.

5. The application and yesterday's submittal indicates there will be dewatered sludge. As requested before, please include any storage and transfer point emissions associated with this dewatered product.

Please address the above deficiencies in writing within fifteen (15) days of the receipt of this email. Application review will not commence until the application has been deemed to be technically complete. Failure to respond to this request in a timely manner may result in the denial of the application.

Should you have any questions, please contact Jerry Williams at (304) 926-0499 ext. 1223 or reply to this email.

Thanks,
Jerry

Jerry Williams, P.E.
Engineer
WVDEP – Division of Air Quality
601 57th Street, SE
Charleston, WV 25304
(304) 926-0499 ext. 1223
jerry.williams@wv.gov

Please consider the environment before printing this email.

Williams, Jerry

From: Joyce Gentry <Joyce.gentry@sj-environmental.com>
Sent: Thursday, May 26, 2016 2:03 PM
To: Williams, Jerry
Subject: Central Station Follow up
Attachments: Attachment L-1_Storage Tanks_BM1 HEP.pdf; Attachment L-2 - 3970_Bulk Liquid Transfer Operations_Water Loading 5-24-16 HEP.pdf; Attachment J-EmissionPointsDataSummarySheet - HEP.pdf; Attachment I - Emission Units HEP.pdf; Attachment F - Process Flow Diagram HEP.pdf; Attachment - Loading Loss Calculations Summary HEP.pdf; Attachment N - Emission Summary_Shalewater 100000ppm_ 10000bbl_5-24-16 HEP.pdf; Attachment G - Process Description _ 5-24-16 HEP.pdf; Attachment L-1 - TANKS HEP.pdf; Central Station SAP.pdf; Technical Bulletin TENORM Management.pdf

Jerry

The attached documents prepared by Hillstone and Hull should answer your questions. If you have any questions please call.

Joyce Gentry
Senior Environmental Consultant
Steptoe & Johnson PLLC
P.O. Box 1588, Charleston, WV 25326-1588
Overnight
Chase Tower, 17th Floor
707 Virginia Street, East, Charleston, WV 25301
O: 304-556-8215 F: 304-353-8180 C: 304-541-6315

joyce.gentry@steptoe-johnson.com
www.steptoe-johnson.com

Steptoe & Johnson PLLC Note:
This e-mail and any attachments are confidential and may be protected by legal privilege. If you are not the intended recipient, be aware that any disclosure, copying, distribution or use of this e-mail or any attachment is prohibited. If you have received this e-mail in error, please notify us immediately by returning it to the sender and delete this copy from your system. Thank you for your cooperation.

Attachment L
EMISSIONS UNIT DATA SHEET
STORAGE TANKS

Provide the following information for each new or modified bulk liquid storage tank as shown on the *Equipment List Form* and other parts of this application. A tank is considered modified if the material to be stored in the tank is different from the existing stored liquid.

IF USING US EPA'S TANKS EMISSION ESTIMATION PROGRAM (AVAILABLE AT www.epa.gov/ttn/tanks.html), APPLICANT MAY ATTACH THE SUMMARY SHEETS IN LIEU OF COMPLETING SECTIONS III, IV, & V OF THIS FORM. HOWEVER, SECTIONS I, II, AND VI OF THIS FORM MUST BE COMPLETED. US EPA'S AP-42, SECTION 7.1, "ORGANIC LIQUID STORAGE TANKS," MAY ALSO BE USED TO ESTIMATE VOC AND HAP EMISSIONS (http://www.epa.gov/ttn/chief/).

I. GENERAL INFORMATION (required)

1. Bulk Storage Area Name N/A	2. Tank Name Brine Mixing Tank #1
3. Tank Equipment Identification No. (as assigned on *Equipment List Form*) BT1	4. Emission Point Identification No. (as assigned on *Equipment List Form*) 39E
5. Date of Commencement of Construction (for existing tanks) N/A	
6. Type of change ☒ New Construction ☐ New Stored Material ☐ Other Tank Modification	
7. Description of Tank Modification (if applicable) N/A	
7A. Does the tank have more than one mode of operation? (e.g. Is there more than one product stored in the tank?) ☐ Yes ☒ No	
7B. If YES, explain and identify which mode is covered by this application (Note: A separate form must be completed for each mode).	
7C. Provide any limitations on source operation affecting emissions, any work practice standards (e.g. production variation, etc.): None	

II. TANK INFORMATION (required)

8. Design Capacity (specify barrels or gallons). Use the internal cross-sectional area multiplied by internal height. 3780 gallons	
9A. Tank Internal Diameter (ft) 7 (Height) x 6.5 (Width) - Rectangular Tank	9B. Tank Internal Height (or Length) (ft) Length: 10ft
10A. Maximum Liquid Height (ft) ~6.5	10B. Average Liquid Height (ft) ~5
11A. Maximum Vapor Space Height (ft) ~0.5	11B. Average Vapor Space Height (ft) ~2
12. Nominal Capacity (specify barrels or gallons). This is also known as "working volume" and considers design liquid levels and overflow valve heights. ~3,000 gallons	

13A. Maximum annual throughput (gal/yr)	13B. Maximum daily throughput (gal/day)
360,000	1000

14. Number of Turnovers per year (annual net throughput/maximum tank liquid volume): 120

15. Maximum tank fill rate (gal/min): 17.2

16. Tank fill method: ☐ Submerged ☐ Splash ☒ Bottom Loading

17. Complete 17A and 17B for Variable Vapor Space Tank Systems ☒ Does Not Apply

17A. Volume Expansion Capacity of System (gal)	17B. Number of transfers into system per year

18. Type of tank (check all that apply):
- ☐ Fixed Roof ___ vertical __ horizontal __ flat roof ___ cone roof ___ dome roof ___ other (describe)
- ☐ External Floating Roof ___ pontoon roof ___ double deck roof
- ☐ Domed External (or Covered) Floating Roof
- ☐ Internal Floating Roof ___ vertical column support ___ self-supporting
- ☐ Variable Vapor Space ___ lifter roof ___ diaphragm
- ☐ Pressurized ___ spherical ___ cylindrical
- ☐ Underground
- ☒ Other (describe) Horizontal Open-Top Mixing Tank.

III. TANK CONSTRUCTION & OPERATION INFORMATION (optional if providing TANKS Summary Sheets)

19. Tank Shell Construction: ☐ Riveted ☐ Gunite lined ☐ Epoxy-coated rivets ☐ Other (describe)

20A. Shell Color	20B. Roof Color	20C. Year Last Painted

21. Shell Condition (if metal and unlined): ☐ No Rust ☐ Light Rust ☐ Dense Rust ☐ Not applicable

22A. Is the tank heated? ☐ YES ☐ NO

22B. If YES, provide the operating temperature (°F)

22C. If YES, please describe how heat is provided to tank.

23. Operating Pressure Range (psig): atmospheric to

24. Complete the following section for **Vertical Fixed Roof Tanks** ☐ Does Not Apply

24A. For dome roof, provide roof radius (ft)

24B. For cone roof, provide slope (ft/ft)

25. Complete the following section for **Floating Roof Tanks** ☐ Does Not Apply

25A. Year Internal Floaters Installed:

25B. Primary Seal Type: (check one) ☐ Metallic (Mechanical) Shoe Seal ☐ Liquid Mounted Resilient Seal ☐ Vapor Mounted Resilient Seal ☐ Other (describe):

25C. Is the Floating Roof equipped with a Secondary Seal? ☐ YES ☐ NO

25D. If YES, how is the secondary seal mounted? (check one) ☐ Shoe ☐ Rim ☐ Other (describe):

25E. Is the Floating Roof equipped with a weather shield? ☐ YES ☐ NO

25F. Describe deck fittings; indicate the number of each type of fitting:		
ACCESS HATCH		
BOLT COVER, GASKETED:	UNBOLTED COVER, GASKETED:	UNBOLTED COVER, UNGASKETED:
AUTOMATIC GAUGE FLOAT WELL		
BOLT COVER, GASKETED:	UNBOLTED COVER, GASKETED:	UNBOLTED COVER, UNGASKETED:
COLUMN WELL		
BUILT-UP COLUMN – SLIDING COVER, GASKETED:	BUILT-UP COLUMN – SLIDING COVER, UNGASKETED:	PIPE COLUMN – FLEXIBLE FABRIC SLEEVE SEAL:
LADDER WELL		
PIP COLUMN – SLIDING COVER, GASKETED:	PIPE COLUMN – SLIDING COVER, UNGASKETED:	
GAUGE-HATCH/SAMPLE PORT		
SLIDING COVER, GASKETED:	SLIDING COVER, UNGASKETED:	
ROOF LEG OR HANGER WELL		
WEIGHTED MECHANICAL ACTUATION, GASKETED:	WEIGHTED MECHANICAL ACTUATION, UNGASKETED:	SAMPLE WELL-SLIT FABRIC SEAL (10% OPEN AREA)
VACUUM BREAKER		
WEIGHTED MECHANICAL ACTUATION, GASKETED:	WEIGHTED MECHANICAL ACTUATION, UNGASKETED:	
RIM VENT		
WEIGHTED MECHANICAL ACTUATION GASKETED:	WEIGHTED MECHANICAL ACTUATION, UNGASKETED:	
DECK DRAIN (3-INCH DIAMETER)		
OPEN:	90% CLOSED:	
STUB DRAIN		
1-INCH DIAMETER:		
OTHER (DESCRIBE, ATTACH ADDITIONAL PAGES IF NECESSARY)		

26. Complete the following section for Internal Floating Roof Tanks ☐ Does Not Apply	
26A. Deck Type: ☐ Bolted ☐ Welded	
26B. For Bolted decks, provide deck construction:	
26C. Deck seam: ☐ Continuous sheet construction 5 feet wide ☐ Continuous sheet construction 6 feet wide ☐ Continuous sheet construction 7 feet wide ☐ Continuous sheet construction 5 × 7.5 feet wide ☐ Continuous sheet construction 5 × 12 feet wide ☐ Other (describe)	
26D. Deck seam length (ft)	26E. Area of deck (ft^2)
For column supported tanks: 26F. Number of columns:	26G. Diameter of each column:

IV. SITE INFORMANTION (optional if providing TANKS Summary Sheets)

27. Provide the city and state on which the data in this section are based.
28. Daily Average Ambient Temperature (°F)
29. Annual Average Maximum Temperature (°F)
30. Annual Average Minimum Temperature (°F)
31. Average Wind Speed (miles/hr)
32. Annual Average Solar Insulation Factor (BTU/(ft^2-day))
33. Atmospheric Pressure (psia)

V. LIQUID INFORMATION (optional if providing TANKS Summary Sheets)

34. Average daily temperature range of bulk liquid:	
34A. Minimum (°F)	34B. Maximum (°F)
35. Average operating pressure range of tank:	
35A. Minimum (psig)	35B. Maximum (psig)
36A. Minimum Liquid Surface Temperature (°F)	36B. Corresponding Vapor Pressure (psia)
37A. Average Liquid Surface Temperature (°F)	37B. Corresponding Vapor Pressure (psia)
38A. Maximum Liquid Surface Temperature (°F)	38B. Corresponding Vapor Pressure (psia)

39. Provide the following for <u>each</u> liquid or gas to be stored in tank. Add additional pages if necessary.			
39A. Material Name or Composition			
39B. CAS Number			
39C. Liquid Density (lb/gal)			
39D. Liquid Molecular Weight (lb/lb-mole)			
39E. Vapor Molecular Weight (lb/lb-mole)			

Maximum Vapor Pressure 39F. True (psia) 39G. Reid (psia)			
Months Storage per Year 39H. From 39I. To			

VI. EMISSIONS AND CONTROL DEVICE DATA (required)

40. Emission Control Devices (check as many as apply): ☒ Does Not Apply

- ☐ Carbon Adsorption[1]
- ☐ Condenser[1]
- ☐ Conservation Vent (psig)
  - Vacuum Setting — Pressure Setting
- ☐ Emergency Relief Valve (psig)
- ☐ Inert Gas Blanket of
- ☐ Insulation of Tank with
- ☐ Liquid Absorption (scrubber)[1]
- ☐ Refrigeration of Tank
- ☐ Rupture Disc (psig)
- ☐ Vent to Incinerator[1]
- ☐ Other[1] (describe):

[1] Complete appropriate Air Pollution Control Device Sheet.

41. Expected Emission Rate (submit Test Data or Calculations here or elsewhere in the application).

Material Name & CAS No.	Breathing Loss (lb/hr)	Working Loss Amount	Working Loss Units	Annual Loss (lb/yr)	Estimation Method[1]
VOCs as RVP 6				15.63	O, TANKS
Benzene				0.23	O, TANKS
Toluene				0.06	O, TANKS
Ethylbenzene				0.02	O, TANKS
Xylene				0.02	O, TANKS

[1] EPA = EPA Emission Factor, MB = Material Balance, SS = Similar Source, ST = Similar Source Test, Throughput Data, O = Other (specify)

☒ Remember to attach emissions calculations, including TANKS Summary Sheets if applicable.

Attachment L
EMISSIONS UNIT DATA SHEET
BULK LIQUID TRANSFER OPERATIONS

Furnish the following information for each new or modified bulk liquid transfer area or loading rack, as shown on the *Equipment List Form* and other parts of this application. This form is to be used for bulk liquid transfer operations such as to and from drums, marine vessels, rail tank cars, and tank trucks.

Identification Number (as assigned on *Equipment List Form*): WL-1

1. Loading Area Name: Water Loading

2. Type of cargo vessels accommodated at this rack or transfer point (check as many as apply):
G Drums G Marine Vessels G Rail Tank Cars X Tank Trucks

3. Loading Rack or Transfer Point Data:

Number of pumps	Located on trucks - 4
Number of liquids loaded	1 – effluent water
Maximum number of marine vessels, tank trucks, tank cars, and/or drums loading at one time	4 tank trucks could load simultaneously

4. Does ballasting of marine vessels occur at this loading area?
G Yes G No X Does not apply

5. Describe cleaning location, compounds and procedure for cargo vessels using this transfer point: N/A

6. Are cargo vessels pressure tested for leaks at this or any other location?
G Yes X No
If YES, describe:

7. Projected Maximum Operating Schedule (for rack or transfer point as a whole):

Maximum	Jan. - Mar.	Apr. - June	July - Sept.	Oct. - Dec.
hours/day	24	24	24	24
days/week	7	7	7	7
weeks/quarter	all	all	all	all

8. Bulk Liquid Data *(add pages as necessary):*

Pump ID No.		N/A					
Liquid Name		Effluent Water					
Max. daily throughput (1000 gal/day)		420					
Max. annual throughput (1000 gal/yr)		153300					
Loading Method [1]		BF/SUB					
Max. Fill Rate (gal/min) [total of 4 pumps]		1600					
Average Fill Time (min/loading)		TBD					
Max. Bulk Liquid Temperature (°F) (TANKS4.09)		57.22					
True Vapor Pressure [2]		0.2805					
Cargo Vessel Condition [3]		U					
Control Equipment or Method [4]		None					
Minimum control efficiency (%)		0					
Maximum Emission Rate	Loading (lb/hr)	8.40					
	Annual (lb/yr)	5519					
Estimation Method [5]		EPA/O					

[1] BF = Bottom Fill SP = Splash Fill SUB = Submerged Fill

[2] At maximum bulk liquid temperature (from TANKS)

[3] B = Ballasted Vessel, C = Cleaned, U = Uncleaned (dedicated service), O = other (describe)

[4] List as many as apply (complete and submit appropriate *Air Pollution Control Device Sheets*):CA = Carbon Adsorption LOA = Lean Oil AdsorptionCO = Condensation SC = Scrubber (Absorption)CRA = Compressor-Refrigeration-Absorption TO = Thermal Oxidation or Incineration
CRC = Compression-Refrigeration-Condensation VB = Dedicated Vapor Balance (closed system)
O = other (descibe)

[5] EPA = EPA Emission Factor as stated in AP-42
MB = Material Balance
TM = Test Measurement based upon test data submittal
O = other (describe) speciated to exclude water from total since water has a vapor pressure and would appear in the total estimated by the Loading loss equation.

9. Proposed Monitoring, Recordkeeping, Reporting, and Testing

Please propose monitoring, recordkeeping, and reporting in order to demonstrate compliance with the proposed operating parameters. Please propose testing in order to demonstrate compliance with the proposed emissions limits.	
MONITORING See Attachment O	RECORDKEEPING See Attachment O
REPORTING See Attachment O	TESTING See Attachment O

MONITORING. PLEASE LIST AND DESCRIBE THE PROCESS PARAMETERS AND RANGES THAT ARE PROPOSED TO BE MONITORED IN ORDER TO DEMONSTRATE COMPLIANCE WITH THE OPERATION OF THIS

RECORDKEEPING. PLEASE DESCRIBE THE PROPOSED RECORDKEEPING THAT WILL ACCOMPANY THE MONITORING.

REPORTING. PLEASE DESCRIBE THE PROPOSED FREQUENCY OF REPORTING OF THE RECORDKEEPING.

TESTING. PLEASE DESCRIBE ANY PROPOSED EMISSIONS TESTING FOR THIS PROCESS EQUIPMENT/AIR POLLUTION CONTROL DEVICE.

10. Describe all operating ranges and maintenance procedures required by Manufacturer to maintain warranty

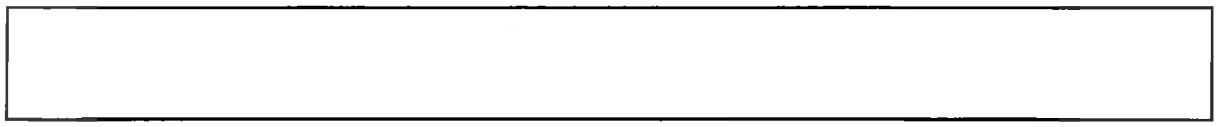

Attachment J

EMISSION POINTS DATA SUMMARY SHEET

Table 1: Emissions Data

ission int ID No. (Must atch ission Units ible-& t Plan)	Emission Point Type[1]	Emission Unit Vented Through This Point (Must match Emission Units Table & Plot Plan)		Air Pollution Control Device		Vent Time for Emission Unit (chemical processes only)		All Regulated Pollutants - Chemical Name/CAS[3] (Speciate VOCs & HAPS)	Maximum Potential Uncontrolled Emissions[4]		Maximum Potential Controlled Emissions[5]		Emission Form or Phase (At exit conditions, Solid, Liquid or Gas/Vapor)	Est. Method Used[6]	Emission Concentration[7] (ppmv or mg/m^4)
		ID No.	Source			Short Term[2]	Max (hr/yr)		lb/hr	ton/yr	lb/hr	ton/yr			
	Pressurized Relief Vent	ITS1	Influent Storage Tank #1			C	8760	VOC	0.027	0.12	0.027	0.12	Gas/Vapor	EE	
								Benzene	<0.01	<0.01	<0.01	<0.01			
								Toluene	<0.01	<0.01	<0.01	<0.01			
								Ethylbenzene	<0.01	<0.01	<0.01	<0.01			
								Xylene	<0.01	<0.01	<0.01	<0.01			
								Total HAPS	<0.01	<0.01	<0.01	<0.01			
	Pressurized Relief Vent	ITS2	Influent Storage Tank #2			C	8760	VOC	0.027	0.12	0.027	0.12	Gas/Vapor	EE	
								Benzene	<0.01	<0.01	<0.01	<0.01			
								Toluene	<0.01	<0.01	<0.01	<0.01			
								Ethylbenzene	<0.01	<0.01	<0.01	<0.01			
								Xylene	<0.01	<0.01	<0.01	<0.01			
								Total HAPS	<0.01	<0.01	<0.01	<0.01			

	Pressurized Relief Vent	ITS3	Influent Storage Tank #3			C	8760	VOC Benzene Toluene Ethylbenzene Xylene Total HAPS	0.027 <0.01 <0.01 <0.01 <0.01 <0.01	0.12 <0.01 <0.01 <0.01 <0.01 <0.01	0.027 <0.01 <0.01 <0.01 <0.01 <0.01	0.12 <0.01 <0.01 <0.01 <0.01 <0.01	Gas/Vapor	EE	
	Pressurized Relief Vent	ITS4	Influent Storage Tank #4			C	8760	VOC Benzene Toluene Ethylbenzene Xylene Total HAPS	0.027 <0.01 <0.01 <0.01 <0.01 <0.01	0.12 <0.01 <0.01 <0.01 <0.01 <0.01	0.027 <0.01 <0.01 <0.01 <0.01 <0.01	0.12 <0.01 <0.01 <0.01 <0.01 <0.01	Gas/Vapor	EE	
	Pressurized Relief Vent	ITS5	Influent Storage Tank #5			C	8760	VOC Benzene Toluene Ethylbenzene Xylene Total HAPS	0.027 <0.01 <0.01 <0.01 <0.01 <0.01	0.12 <0.01 <0.01 <0.01 <0.01 <0.01	0.027 <0.01 <0.01 <0.01 <0.01 <0.01	0.12 <0.01 <0.01 <0.01 <0.01 <0.01	Gas/Vapor	EE	
	Pressurized Relief Vent	ITS6	Influent Storage Tank #6			C	8760	VOC Benzene Toluene Ethylbenzene Xylene Total HAPS	0.027 <0.01 <0.01 <0.01 <0.01 <0.01	0.12 <0.01 <0.01 <0.01 <0.01 <0.01	0.027 <0.01 <0.01 <0.01 <0.01 <0.01	0.12 <0.01 <0.01 <0.01 <0.01 <0.01	Gas/Vapor	EE	

Pressurized Relief Vent	ITS7	Influent Storage Tank #7			C	8760	VOC Benzene Toluene Ethylbenzene Xylene Total HAPS	0.027 <0.01 <0.01 <0.01 <0.01 <0.01	0.12 <0.01 <0.01 <0.01 <0.01 <0.01	0.027 <0.01 <0.01 <0.01 <0.01 <0.01	0.12 <0.01 <0.01 <0.01 <0.01 <0.01	Gas/Vapor	EE	
Pressurized Relief Vent	ITS8	Influent Storage Tank #8			C	8760	VOC Benzene Toluene Ethylbenzene Xylene Total HAPS	0.027 <0.01 <0.01 <0.01 <0.01 <0.01	0.12 <0.01 <0.01 <0.01 <0.01 <0.01	0.027 <0.01 <0.01 <0.01 <0.01 <0.01	0.12 <0.01 <0.01 <0.01 <0.01 <0.01	Gas/Vapor	EE	
Pressurized Relief Vent	ITS9	Influent Storage Tank #9			C	8760	VOC Benzene Toluene Ethylbenzene Xylene Total HAPS	0.027 <0.01 <0.01 <0.01 <0.01 <0.01	0.12 <0.01 <0.01 <0.01 <0.01 <0.01	0.027 <0.01 <0.01 <0.01 <0.01 <0.01	0.12 <0.01 <0.01 <0.01 <0.01 <0.01	Gas/Vapor	EE	
Pressurized Relief Vent	ITS10	Influent Storage Tank #10			C	8760	VOC Benzene Toluene Ethylbenzene Xylene Total HAPS	0.027 <0.01 <0.01 <0.01 <0.01 <0.01	0.12 <0.01 <0.01 <0.01 <0.01 <0.01	0.027 <0.01 <0.01 <0.01 <0.01 <0.01	0.12 <0.01 <0.01 <0.01 <0.01 <0.01	Gas/Vapor	EE	

E	Pressurized Relief Vent	ITS11	Influent Storage Tank #11			C	8760	VOC Benzene Toluene Ethylbenzene Xylene Total HAPS	0.027 <0.01 <0.01 <0.01 <0.01 <0.01	0.12 <0.01 <0.01 <0.01 <0.01 <0.01	0.027 <0.01 <0.01 <0.01 <0.01 <0.01	0.12 <0.01 <0.01 <0.01 <0.01 <0.01	Gas/Vapor	EE	
E	Pressurized Relief Vent	ITS12	Influent Storage Tank #12			C	8760	VOC Benzene Toluene Ethylbenzene Xylene Total HAPS	0.027 <0.01 <0.01 <0.01 <0.01 <0.01	0.12 <0.01 <0.01 <0.01 <0.01 <0.01	0.027 <0.01 <0.01 <0.01 <0.01 <0.01	0.12 <0.01 <0.01 <0.01 <0.01 <0.01	Gas/Vapor	EE	
E	Pressurized Relief Vent	ITS13	Influent Storage Tank #13			C	8760	VOC Benzene Toluene Ethylbenzene Xylene Total HAPS	0.027 <0.01 <0.01 <0.01 <0.01 <0.01	0.12 <0.01 <0.01 <0.01 <0.01 <0.01	0.027 <0.01 <0.01 <0.01 <0.01 <0.01	0.12 <0.01 <0.01 <0.01 <0.01 <0.01	Gas/Vapor	EE	
E	Pressurized Relief Vent	ITS14	Influent Storage Tank #14			C	8760	VOC Benzene Toluene Ethylbenzene Xylene Total HAPS	0.027 <0.01 <0.01 <0.01 <0.01 <0.01	0.12 <0.01 <0.01 <0.01 <0.01 <0.01	0.027 <0.01 <0.01 <0.01 <0.01 <0.01	0.12 <0.01 <0.01 <0.01 <0.01 <0.01	Gas/Vapor	EE	

Pressurized Relief Vent	ITS15	Influent Storage Tank #15			C	8760	VOC Benzene Toluene Ethylbenzene Xylene Total HAPS	0.027 <0.01 <0.01 <0.01 <0.01 <0.01	0.12 <0.01 <0.01 <0.01 <0.01 <0.01	0.027 <0.01 <0.01 <0.01 <0.01 <0.01	0.12 <0.01 <0.01 <0.01 <0.01 <0.01	Gas/Vapor	EE	
Pressurized Relief Vent	ITS16	Influent Storage Tank #16			C	8760	VOC Benzene Toluene Ethylbenzene Xylene Total HAPS	0.027 <0.01 <0.01 <0.01 <0.01 <0.01	0.12 <0.01 <0.01 <0.01 <0.01 <0.01	0.027 <0.01 <0.01 <0.01 <0.01 <0.01	0.12 <0.01 <0.01 <0.01 <0.01 <0.01	Gas/Vapor	EE	
Pressurized Relief Vent	W1	Weir Tank #1			C	8760	VOC Benzene Toluene Ethylbenzene Xylene Total HAPS	0.297 <0.01 <0.01 <0.01 <0.01 <0.01	1.303 0.019 <0.01 <0.01 <0.01 0.028	0.297 <0.01 <0.01 <0.01 <0.01 <0.01	1.303 0.019 <0.01 <0.01 <0.01 0.028	Gas/Vapor	EE	
Pressurized Relief Vent	W2	Weir Tank #2			C	8760	VOC Benzene Toluene Ethylbenzene Xylene Total HAPS	0.297 <0.01 <0.01 <0.01 <0.01 <0.01	1.303 0.019 <0.01 <0.01 <0.01 0.028	0.297 <0.01 <0.01 <0.01 <0.01 <0.01	1.303 0.019 <0.01 <0.01 <0.01 0.028	Gas/Vapor	EE	

Pressurized Relief Vent	ST1	Settling Tank #1			C	8760	VOC Benzene Toluene Ethylbenzene Xylene Total HAPS	0.297 <0.01 <0.01 <0.01 <0.01 <0.01	1.303 0.019 <0.01 <0.01 <0.01 0.028	0.297 <0.01 <0.01 <0.01 <0.01 <0.01	1.303 0.019 <0.01 <0.01 <0.01 0.028	Gas/Vapor	EE	
Pressurized Relief Vent	ST2	Settling Tank #2			C	8760	VOC Benzene Toluene Ethylbenzene Xylene Total HAPS	0.297 <0.01 <0.01 <0.01 <0.01 <0.01	1.303 0.019 <0.01 <0.01 <0.01 0.028	0.297 <0.01 <0.01 <0.01 <0.01 <0.01	1.303 0.019 <0.01 <0.01 <0.01 0.028	Gas/Vapor	EE	
Pressurized Relief Vent	ST3	Settling Tank #3			C	8760	VOC Benzene Toluene Ethylbenzene Xylene Total HAPS	0.297 <0.01 <0.01 <0.01 <0.01 <0.01	1.303 0.019 <0.01 <0.01 <0.01 0.028	0.297 <0.01 <0.01 <0.01 <0.01 <0.01	1.303 0.019 <0.01 <0.01 <0.01 0.028	Gas/Vapor	EE	
Pressurized Relief Vent	ST4	Settling Tank #4			C	8760	VOC Benzene Toluene Ethylbenzene Xylene Total HAPS	0.297 <0.01 <0.01 <0.01 <0.01 <0.01	1.303 0.019 <0.01 <0.01 <0.01 0.028	0.297 <0.01 <0.01 <0.01 <0.01 <0.01	1.303 0.019 <0.01 <0.01 <0.01 0.028	Gas/Vapor	EE	

Pressurized Relief Vent	ST5	Settling Tank #5			C	8760	VOC Benzene Toluene Ethylbenzene Xylene Total HAPS	0.297 <0.01 <0.01 <0.01 <0.01 <0.01	1.303 0.019 <0.01 <0.01 <0.01 0.028	0.297 <0.01 <0.01 <0.01 <0.01 <0.01	1.303 0.019 <0.01 <0.01 <0.01 0.028	Gas/Vapor	EE	
Pressurized Relief Vent	ET1	Effluent Tank #1			C	8760	VOC Benzene Toluene Ethylbenzene Xylene Total HAPS	0.033 <0.01 <0.01 <0.01 <0.01 <0.01	0.146 <0.01 <0.01 <0.01 <0.01 <0.01	0.033 <0.01 <0.01 <0.01 <0.01 <0.01	0.146 <0.01 <0.01 <0.01 <0.01 <0.01	Gas/Vapor	EE	
Pressurized Relief Vent	ET2	Effluent Tank #2			C	8760	VOC Benzene Toluene Ethylbenzene Xylene Total HAPS	0.033 <0.01 <0.01 <0.01 <0.01 <0.01	0.146 <0.01 <0.01 <0.01 <0.01 <0.01	0.033 <0.01 <0.01 <0.01 <0.01 <0.01	0.146 <0.01 <0.01 <0.01 <0.01 <0.01	Gas/Vapor	EE	
Pressurized Relief Vent	ET3	Effluent Tank #3			C	8760	VOC Benzene Toluene Ethylbenzene Xylene Total HAPS	0.033 <0.01 <0.01 <0.01 <0.01 <0.01	0.146 <0.01 <0.01 <0.01 <0.01 <0.01	0.033 <0.01 <0.01 <0.01 <0.01 <0.01	0.146 <0.01 <0.01 <0.01 <0.01 <0.01	Gas/Vapor	EE	

Pressurized Relief Vent	ET4	Effluent Tank #4			C	8760	VOC Benzene Toluene Ethylbenzene Xylene Total HAPS	0.033 <0.01 <0.01 <0.01 <0.01 <0.01	0.146 <0.01 <0.01 <0.01 <0.01 <0.01	0.033 <0.01 <0.01 <0.01 <0.01 <0.01	0.146 <0.01 <0.01 <0.01 <0.01 <0.01	Gas/Vapor	EE	
Pressurized Relief Vent	ET5	Effluent Tank #5			C	8760	VOC Benzene Toluene Ethylbenzene Xylene Total HAPS	0.033 <0.01 <0.01 <0.01 <0.01 <0.01	0.146 <0.01 <0.01 <0.01 <0.01 <0.01	0.033 <0.01 <0.01 <0.01 <0.01 <0.01	0.146 <0.01 <0.01 <0.01 <0.01 <0.01	Gas/Vapor	EE	
Pressurized Relief Vent	ET6	Effluent Tank #6			C	8760	VOC Benzene Toluene Ethylbenzene Xylene Total HAPS	0.033 <0.01 <0.01 <0.01 <0.01 <0.01	0.146 <0.01 <0.01 <0.01 <0.01 <0.01	0.033 <0.01 <0.01 <0.01 <0.01 <0.01	0.146 <0.01 <0.01 <0.01 <0.01 <0.01	Gas/Vapor	EE	
Pressurized Relief Vent	ET7	Effluent Tank #7			C	8760	VOC Benzene Toluene Ethylbenzene Xylene Total HAPS	0.033 <0.01 <0.01 <0.01 <0.01 <0.01	0.146 <0.01 <0.01 <0.01 <0.01 <0.01	0.033 <0.01 <0.01 <0.01 <0.01 <0.01	0.146 <0.01 <0.01 <0.01 <0.01 <0.01	Gas/Vapor	EE	

Pressurized Relief Vent	ET8	Effluent Tank #8			C	8760	VOC Benzene Toluene Ethylbenzene Xylene Total HAPS	0.033 <0.01 <0.01 <0.01 <0.01 <0.01	0.146 <0.01 <0.01 <0.01 <0.01 <0.01	0.033 <0.01 <0.01 <0.01 <0.01 <0.01	0.146 <0.01 <0.01 <0.01 <0.01 <0.01	Gas/Vapor	EE	
Pressurized Relief Vent	ET9	Effluent Tank #9			C	8760	VOC Benzene Toluene Ethylbenzene Xylene Total HAPS	0.033 <0.01 <0.01 <0.01 <0.01 <0.01	0.146 <0.01 <0.01 <0.01 <0.01 <0.01	0.033 <0.01 <0.01 <0.01 <0.01 <0.01	0.146 <0.01 <0.01 <0.01 <0.01 <0.01	Gas/Vapor	EE	
Pressurized Relief Vent	ET10	Effluent Tank #10			C	8760	VOC Benzene Toluene Ethylbenzene Xylene Total HAPS	0.033 <0.01 <0.01 <0.01 <0.01 <0.01	0.146 <0.01 <0.01 <0.01 <0.01 <0.01	0.033 <0.01 <0.01 <0.01 <0.01 <0.01	0.146 <0.01 <0.01 <0.01 <0.01 <0.01	Gas/Vapor	EE	
Pressurized Relief Vent	ET11	Effluent Tank #11			C	8760	VOC Benzene Toluene Ethylbenzene Xylene Total HAPS	0.033 <0.01 <0.01 <0.01 <0.01 <0.01	0.146 <0.01 <0.01 <0.01 <0.01 <0.01	0.033 <0.01 <0.01 <0.01 <0.01 <0.01	0.146 <0.01 <0.01 <0.01 <0.01 <0.01	Gas/Vapor	EE	

Pressurized Relief Vent	ET12	Effluent Tank #12			C	8760	VOC Benzene Toluene Ethylbenzene Xylene Total HAPS	0.033 <0.01 <0.01 <0.01 <0.01 <0.01	0.146 <0.01 <0.01 <0.01 <0.01 <0.01	0.033 <0.01 <0.01 <0.01 <0.01 <0.01	0.146 <0.01 <0.01 <0.01 <0.01 <0.01	Gas/Vapor	EE	
Pressurized Relief Vent	SI1	Sludge Influent Tank #1			C	8760	VOC Benzene Toluene Ethylbenzene Xylene Total HAPS	0.038 <0.01 <0.01 <0.01 <0.01 <0.01	0.165 <0.01 <0.01 <0.01 <0.01 <0.01	0.038 <0.01 <0.01 <0.01 <0.01 <0.01	0.165 <0.01 <0.01 <0.01 <0.01 <0.01	Gas/Vapor	EE	
Pressurized Relief Vent	SI2	Sludge Influent Tank #2			C	8760	VOC Benzene Toluene Ethylbenzene Xylene Total HAPS	0.038 <0.01 <0.01 <0.01 <0.01 <0.01	0.165 <0.01 <0.01 <0.01 <0.01 <0.01	0.038 <0.01 <0.01 <0.01 <0.01 <0.01	0.165 <0.01 <0.01 <0.01 <0.01 <0.01	Gas/Vapor	EE	
Pressurized Relief Vent	F1	Filtrate Water #1			C	8760	VOC Benzene Toluene Ethylbenzene Xylene Total HAPS	0.026 <0.01 <0.01 <0.01 <0.01 <0.01	0.116 <0.01 <0.01 <0.01 <0.01 <0.01	0.026 <0.01 <0.01 <0.01 <0.01 <0.01	0.116 <0.01 <0.01 <0.01 <0.01 <0.01	Gas/Vapor	EE	

	Open Top Tank	BM1	Brine Mixing Tank 1			NA	8760	VOC Benzene Toluene Ethylbenzene Xylene Total HAPS	0.026 <0.01 <0.01 <0.01 <0.01 <0.01	<0.01 <0.01 <0.01 <0.01 <0.01 <0.01	<0.01 <0.01 <0.01 <0.01 <0.01 <0.01	<0.01 <0.01 <0.01 <0.01 <0.01 <0.01	Gas/Vapor	EE	
	Loading Loss	WL-1	Water Loadout			NA	8760	VOC Total HAPS	0.711 0.015	3.113 0.065	0.711 0.015	3.113 0.065	Gas/Vapor	EE	
	Loading Loss	SL-1	Sludge Loadout			NA	8760	VOC Total HAPS	0.050 0.001	0.220 0.006	0.050 0.001	0.220 0.006	Gas/Vapor	EE	
	Fugitive	Unpaved Haul Road	Unpaved Haul Road			NA	8760	VOC Total HAPS	0.761 0.016	3.333 0.072	0.761 0.016	3.333 0.072	Gas/Vapor	EE	

The EMISSION POINTS DATA SUMMARY SHEET provides a summation of emissions by emission unit. Note that uncaptured process emission unit emissions are not typically considered to be fugitive and must be accounted for on the appropriate EMISSIONS UNIT DATA SHEET and on the EMISSION POINTS DATA SUMMARY SHEET. Please note that total emissions from the source are equal to all vented emissions, all fugitive emissions, plus all other emissions (e.g. uncaptured emissions). Please complete the FUGITIVE EMISSIONS DATA SUMMARY SHEET for fugitive emission activities.

[1] Please add descriptors such as upward vertical stack, downward vertical stack, horizontal stack, relief vent, rain cap, etc.

[2] Indicate by "C" if venting is continuous. Otherwise, specify the average short-term venting rate with units, for intermittent venting (ie., 15 min/hr). Indicate as many rates as needed to clarify frequency of venting (e.g., 5 min/day, 2 days/wk).

[3] List all regulated air pollutants. Speciate VOCs, including all HAPs. Follow chemical name with Chemical Abstracts Service (CAS) number. **LIST** Acids, CO, CS_2, VOCs, H_2S, Inorganics, Lead, Organics, O_3, NO, NO_2, SO_2, SO_3, all applicable Greenhouse Gases (including CO_2 and methane), etc. **DO NOT LIST** H_2, H_2O, N_2, O_2, and Noble Gases.

[4] Give maximum potential emission rate with no control equipment operating. If emissions occur for less than 1 hr, then record emissions per batch in minutes (e.g. 5 lb VOC/20 minute batch).

[5] Give maximum potential emission rate with proposed control equipment operating. If emissions occur for less than 1 hr, then record emissions per batch in minutes (e.g. 5 lb VOC/20 minute batch).

6 Indicate method used to determine emission rate as follows: MB = material balance; ST = stack test (give date of test); EE = engineering estimate; O = other (specify).

7 Provide for all pollutant emissions. Typically, the units of parts per million by volume (ppmv) are used. If the emission is a mineral acid (sulfuric, nitric, hydrochloric or phosphoric) use units of milligram per dry cubic meter (mg/m^3) at standard conditions (68 °F and 29.92 inches Hg) (see 45CSR7). If the pollutant is SO_2, use units of ppmv (See 45CSR10).

Attachment J

EMISSION POINTS DATA SUMMARY SHEET

Table 2: Release Parameter Data

Emission Point ID No.	Inner Diameter (ft.)	Exit Gas			Emission Point Elevation (ft)		UTM Coordinates (km)	
		Temp. (°F)	Volumetric Flow [1] (acfm) *at operating conditions*	Velocity (fps)	Ground Level *(Height above mean sea level)*	Stack Height [2] *(Release height of emissions above ground level)*	Northing	Easting
1E	0.34	Atmospheric	Unknown	Unknown	810	9	4347954	516169
2E	0.34	Atmospheric	Unknown	Unknown	810	9	4347954	516169
3E	0.34	Atmospheric	Unknown	Unknown	810	9	4347954	516169
4E	0.34	Atmospheric	Unknown	Unknown	810	9	4347954	516169
5E	0.34	Atmospheric	Unknown	Unknown	810	9	4347954	516169
6E	0.34	Atmospheric	Unknown	Unknown	810	9	4347954	516169
7E	0.34	Atmospheric	Unknown	Unknown	810	9	4347954	516169
8E	0.34	Atmospheric	Unknown	Unknown	810	9	4347954	516169
9E	0.34	Atmospheric	Unknown	Unknown	810	9	4347954	516169
10E	0.34	Atmospheric	Unknown	Unknown	810	9	4347954	516169
11E	0.34	Atmospheric	Unknown	Unknown	810	9	4347954	516169
12E	0.34	Atmospheric	Unknown	Unknown	810	9	4347954	516169
13E	0.34	Atmospheric	Unknown	Unknown	810	9	4347954	516169

14E	0.34	Atmospheric	Unknown	Unknown	810	9	4347954	516169
15E	0.34	Atmospheric	Unknown	Unknown	810	9	4347954	516169
16E	0.34	Atmospheric	Unknown	Unknown	810	9	4347954	516169
17E	0.34	Atmospheric	Unknown	Unknown	810	9	4347954	516169
18E	0.34	Atmospheric	Unknown	Unknown	810	9	4347954	516169
19E	0.34	Atmospheric	Unknown	Unknown	810	9	4347954	516169
20E	0.34	Atmospheric	Unknown	Unknown	810	9	4347954	516169
21E	0.34	Atmospheric	Unknown	Unknown	810	9	4347954	516169
22E	0.34	Atmospheric	Unknown	Unknown	810	9	4347954	516169
23E	0.34	Atmospheric	Unknown	Unknown	810	9	4347954	516169
24E	0.34	Atmospheric	Unknown	Unknown	810	9	4347954	516169
25E	0.34	Atmospheric	Unknown	Unknown	810	9	4347954	516169
26E	0.34	Atmospheric	Unknown	Unknown	810	9	4347954	516169
27E	0.34	Atmospheric	Unknown	Unknown	810	9	4347954	516169
28E	0.34	Atmospheric	Unknown	Unknown	810	9	4347954	516169
29E	0.34	Atmospheric	Unknown	Unknown	810	9	4347954	516169
30E	0.34	Atmospheric	Unknown	Unknown	810	9	4347954	516169
31E	0.34	Atmospheric	Unknown	Unknown	810	9	4347954	516169
32E	0.34	Atmospheric	Unknown	Unknown	810	9	4347954	516169
33E	0.34	Atmospheric	Unknown	Unknown	810	9	4347954	516169
34E	0.34	Atmospheric	Unknown	Unknown	810	9	4347954	516169
35E	0.34	Atmospheric	Unknown	Unknown	810	9	4347954	516169

36E	0.34	Atmospheric	Unknown	Unknown	810	9	4347954	516169
37E	0.34	Atmospheric	Unknown	Unknown	810	9	4347954	516169
38E	0.34	Atmospheric	Unknown	Unknown	810	9	4347954	516169
39E	NA	Atmospheric	Unknown	Unknown	810	10	4347954	516169
40E	NA	Atmospheric	Unknown	Unknown	NA	NA	4347954	516169
41E	NA	Atmospheric	Unknown	Unknown	NA	NA	4347954	516169
42E	NA	Atmospheric	Unknown	Unknown	NA	NA	4347954	516169

[1] Give at operating conditions. Include inerts.

[2] Release height of emissions above ground level.

Attachment I

Emission Units Table

(includes all emission units and air pollution control devices that will be part of this permit application review, regardless of permitting status)

Emission Unit ID[1]	Emission Point ID[2]	Emission Unit Description	Year Installed/ Modified	Design Capacity	Type[3] and Date of Change	Control Device[4]
ITS1	1E	Influent Storage Tank #1	2016	21,000 GAL	New	NA
ITS2	2E	Influent Storage Tank #2	2016	21,000 GAL	New	NA
ITS3	3E	Influent Storage Tank #3	2016	21,000 GAL	New	NA
ITS4	4E	Influent Storage Tank #4	2016	21,000 GAL	New	NA
ITS5	5E	Influent Storage Tank #5	2016	21,000 GAL	New	NA
ITS6	6E	Influent Storage Tank #6	2016	21,000 GAL	New	NA
ITS7	7E	Influent Storage Tank #7	2016	21,000 GAL	New	NA
ITS8	8E	Influent Storage Tank #8	2016	21,000 GAL	New	NA
ITS9	9E	Influent Storage Tank #9	2016	21,000 GAL	New	NA
ITS10	10E	Influent Storage Tank #10	2016	21,000 GAL	New	NA
ITS11	11E	Influent Storage Tank #11	2016	21,000 GAL	New	NA
ITS12	12E	Influent Storage Tank #12	2016	21,000 GAL	New	NA
ITS13	13E	Influent Storage Tank #13	2016	21,000 GAL	New	NA
ITS14	14E	Influent Storage Tank #14	2016	21,000 GAL	New	NA
ITS15	15E	Influent Storage Tank #15	2016	21,000 GAL	New	NA
ITS16	16E	Influent Storage Tank #16	2016	21,000 GAL	New	NA
W1	17E	Weir Tank #1	2016	21,000 GAL	New	NA
W2	18E	Weir Tank #2	2016	21,000 GAL	New	NA
ST1	19E	Settling Tank #1	2016	21,000 GAL	New	NA
ST2	20E	Settling Tank #2	2016	21,000 GAL	New	NA
ST3	21E	Settling Tank #3	2016	21,000 GAL	New	NA
ST4	22E	Settling Tank #4	2016	21,000 GAL	New	NA

ST5	23E	Settling Tank #5	2016	21,000 GAL	New	NA
ET1	24E	Effluent Tank #1	2016	21,000 GAL	New	NA
ET2	25E	Effluent Tank #2	2016	21,000 GAL	New	NA
ET3	26E	Effluent Tank #3	2016	21,000 GAL	New	NA
ET4	27E	Effluent Tank #4	2016	21,000 GAL	New	NA
ET5	28E	Effluent Tank #5	2016	21,000 GAL	New	NA
ET6	29E	Effluent Tank #6	2016	21,000 GAL	New	NA
ET7	30E	Effluent Tank #7	2016	21,000 GAL	New	NA
ET8	31E	Effluent Tank #8	2016	21,000 GAL	New	NA
ET9	32E	Effluent Tank #9	2016	21,000 GAL	New	NA
ET10	33E	Effluent Tank #10	2016	21,000 GAL	New	NA
ET11	34E	Effluent Tank #11	2016	21,000 GAL	New	NA
ET12	35E	Effluent Tank #12	2016	21,000 GAL	New	NA
SI1	36E	Sludge Influent Tank #1	2016	21,000 GAL	New	NA
SI2	37E	Sludge Influent Tank #2	2016	21,000 GAL	New	NA
FT1	38E	Filtrate Water #1	2016	21,000 GAL	New	NA
BM1	39E	Brine Mixing Tank #1	2016	3,780 GAL	New	NA
WL-1	40E	Water Loadout	2016	NA	New	NA
SL-1	41E	Sludge Loadout	2016	NA	New	NA
Unpaved Haul Road	42E	Unpaved Haul Road	2016	NA	New	NA

[1] For Emission Units (or Sources) use the following numbering system:1S, 2S, 3S,... or other appropriate designation.
[2] For Emission Points use the following numbering system:1E, 2E, 3E, ... or other appropriate designation.
[3] New, modification, removal
[4] For Control Devices use the following numbering system: 1C, 2C, 3C,... or other appropriate designation.

Process Flow Diagram

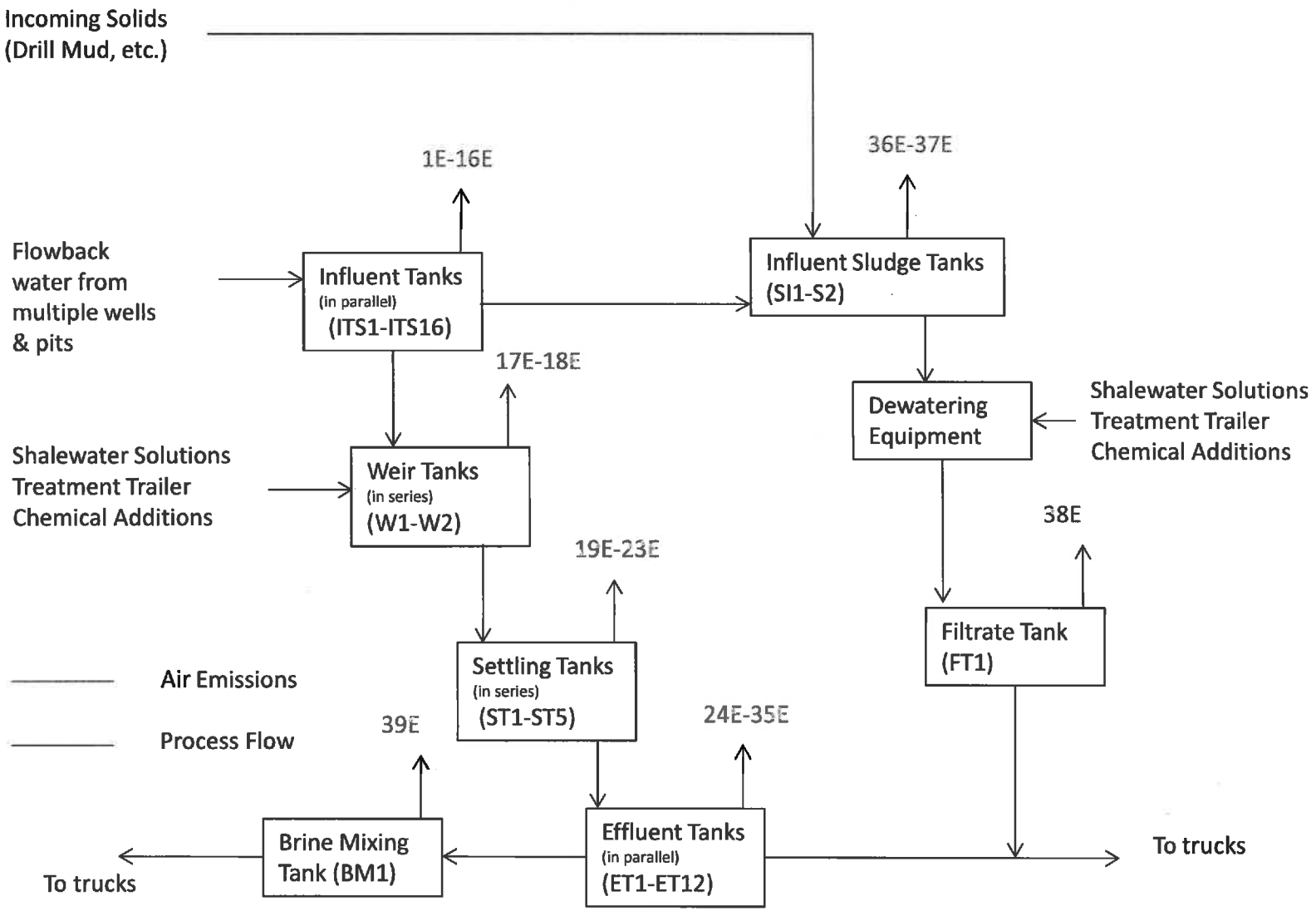

Loading Loss Calculations

Emissions from the loading of water and sludge effluent into haul trucks were calculated using the Loading Loss Equation (Pg. 4, AP-42 Section 5.2: Transportation and Marketing of Petroleum Liquids).

$$L_L = 12.46 \frac{SPM}{T}$$

Where:

L_L = loading loss, pounds per 1000 gallons ($lb/10_3$) of liquid loaded
S= a saturation factor (0.6 for submerged loading)
P = true vapor pressure of liquid loaded, pounds per square inch absolute (psia)
M = molecular weight of vapors, pounds per pound-mole (lb/lb-mole)
T= temperature of bulk liquid loaded, R (F+460)

The following assumptions were made when calculating the effluent water loadout (W-1) emissions:

S = 0.6, submerged loading
P = 0.2805 psia, average at liquid bulk temperature*
M = 19.5 lb/lb-mole, molecular weight*
T= 517.22R, average liquid bulk temperature*

*Derived from TANKS 4.09D calculations for 100,000 ppm (10%) VOC solution.

A molecular weight of 19.5 was used to be consistent with the molecular weight calculated in the TANKS4.09D model for a 100,000 ppm VOC solution. Substituting a molecular weight of 22 into the loading loss equation did not make a significant change in emission totals (+/- 0.03 ton/yr of VOC). Total loading loss was determined to be 0.08 lb/1000 gal. Based on a maximum flow rate of 10,000 bbl/day of effluent, total emissions from water loadout are 33.21 lb/day (6.06 ton/yr). Because the effluent liquid will be, at maximum, 90% water/10% VOC solutions, the total loading emissions values include water vapor losses.

Based on the mass balance ratio of VOC to water vapor emissions from TANKS 4.09D, the percentage of VOC emissions contributing to total loading emissions was determined (see "Water Loadout (W-1) Calculations" sheet in Attachment N) to be approximately 45%. Therefore, actual VOC emissions from water loudout were determined to be 15.1 lb/day (2.76 lb/yr).

The same method and assumptions were utilized to determine loading loss emissions from wet cake (sludge) loadout (see "Sludge Loadout (SL-1) Calculations" sheet in Attachment N).

Unloading losses, or emissions from the unloading of material from haul trucks into the 16 tanks at the facility, are calculated as working losses for the influent storage tanks (ITS 1-16) in the TANKS 4.09D model and therefore do not need to be determined using the loading loss equation.

Emissions Summary - Shalewater Solutions Facility

Based on: 10,000 bbl/day 153,300,000 gal/yr total throughput

5/24/2016

Emission Point #	Source	Tank Characteristics			Throughput	Emissions Results				Comments	Assumptions	TANKS Results							
		Volume	Dimensions	Material		VOC Emissions		HAPs				Water	BTEX Total	VOCs Tot	Benz	Ethyl	Toluene	Xylenes	Cumulative TOTAL
		Gals	Diam x Ht ft		Gals/yr	Lbs/Yr	Tons/Yr	Lbs/Yr	Tons/Yr			lbs/yr							
1E	Influent Storage Tank 1 (ITS 1)	21,000	8.5 x 45	Steel	9,581,250	0.027	0.120	0.001	0.003	Influent water storage, closed top frack tanks manifolded together for storage and equalization; 1/16 of influent material goes through each tank	Assuming 100,000ppm VOC (10%); RVP 6 plus BTEX	287.23	5.17	240.16	3.54	0.34	1.01	0.28	234.99	527.39
2E	Influent Storage Tank 2 (ITS 2)	21,000	8.5 x 45	Steel	9,581,250	0.027	0.120	0.001	0.003			288.23	5.17	240.16	3.54	0.34	1.01	0.28	234.99	528.39
3E	Influent Storage Tank 3 (ITS 3)	21,000	8.5 x 45	Steel	9,581,250	0.027	0.120	0.001	0.003			289.23	5.17	240.16	3.54	0.34	1.01	0.28	234.99	529.39
4E	Influent Storage Tank 4 (ITS 4)	21,000	8.5 x 45	Steel	9,581,250	0.027	0.120	0.001	0.003			290.23	5.17	240.16	3.54	0.34	1.01	0.28	234.99	530.39
5E	Influent Storage Tank 5 (ITS 5)	21,000	8.5 x 45	Steel	9,581,250	0.027	0.120	0.001	0.003			291.23	5.17	240.16	3.54	0.34	1.01	0.28	234.99	531.39
6E	Influent Storage Tank 6 (ITS 6)	21,000	8.5 x 45	Steel	9,581,250	0.027	0.120	0.001	0.003			292.23	5.17	240.16	3.54	0.34	1.01	0.28	234.99	532.39
7E	Influent Storage Tank 7 (ITS 7)	21,000	8.5 x 45	Steel	9,581,250	0.027	0.120	0.001	0.003			293.23	5.17	240.16	3.54	0.34	1.01	0.28	234.99	533.39
8E	Influent Storage Tank 8 (ITS 8)	21,000	8.5 x 45	Steel	9,581,250	0.027	0.120	0.001	0.003			294.23	5.17	240.16	3.54	0.34	1.01	0.28	234.99	534.39
9E	Influent Storage Tank 9 (ITS 9)	21,000	8.5 x 45	Steel	9,581,250	0.027	0.120	0.001	0.003			295.23	5.17	240.16	3.54	0.34	1.01	0.28	234.99	535.39
10E	Influent Storage Tank 10 (ITS 10)	21,000	8.5 x 45	Steel	9,581,250	0.027	0.120	0.001	0.003			296.23	5.17	240.16	3.54	0.34	1.01	0.28	234.99	536.39
11E	Influent Storage Tank 11 (ITS 11)	21,000	8.5 x 45	Steel	9,581,250	0.027	0.120	0.001	0.003			297.23	5.17	240.16	3.54	0.34	1.01	0.28	234.99	537.39
12E	Influent Storage Tank 12 (ITS 12)	21,000	8.5 x 45	Steel	9,581,250	0.027	0.120	0.001	0.003			298.23	5.17	240.16	3.54	0.34	1.01	0.28	234.99	538.39
13E	Influent Storage Tank 13 (ITS 13)	21,000	8.5 x 45	Steel	9,581,250	0.027	0.120	0.001	0.003			299.23	5.17	240.16	3.54	0.34	1.01	0.28	234.99	539.39
14E	Influent Storage Tank 14 (ITS 14)	21,000	8.5 x 45	Steel	9,581,250	0.027	0.120	0.001	0.003			300.23	5.17	240.16	3.54	0.34	1.01	0.28	234.99	540.39
15E	Influent Storage Tank 15 (ITS 15)	21,000	8.5 x 45	Steel	9,581,250	0.027	0.120	0.001	0.003			301.23	5.17	240.16	3.54	0.34	1.01	0.28	234.99	541.39
16E	Influent Storage Tank 16 (ITS 16)	21,000	8.5 x 45	Steel	9,581,250	0.027	0.120	0.001	0.003			302.23	5.17	240.16	3.54	0.34	1.01	0.28	234.99	542.39
17E	Weir Tank 1 (WT 1)	21,000	8.5 x 45	Steel	153,300,000	0.297	1.303	0.006	0.026	Closed top frac tank w/ internal weirs	Assuming 100,000ppm VOC (10%); RVP 6 plus BTEX	3106.42	56.05	2605.57	38.37	3.66	10.97	3.05	2549.62	5712.09
18E	Weir Tank 2 (WT 2)	21,000	8.5 x 45	Steel	153,300,000	0.297	1.303	0.006	0.026			3106.42	56.05	2605.57	38.37	3.66	10.97	3.05	2549.62	5712.09
19E	Settling Tank 1 (ST 1)	21,000	8.5 x 45	Steel	153,300,000	0.297	1.303	0.006	0.026	Closed top frac tanks used for settling	Assuming 100,000ppm VOC (10%); RVP 6 plus BTEX	3106.42	56.05	2605.57	38.37	3.66	10.97	3.05	2549.62	5712.09
20E	Settling Tank 2 (ST 2)	21,000	8.5 x 45	Steel	153,300,000	0.297	1.303	0.006	0.026			3106.42	56.05	2605.57	38.37	3.66	10.97	3.05	2549.62	5712.09
21E	Settling Tank 3 (ST 3)	21,000	8.5 x 45	Steel	153,300,000	0.297	1.303	0.006	0.026			3106.42	56.05	2605.57	38.37	3.66	10.97	3.05	2549.62	5712.09
22E	Settling Tank 4 (ST 4)	21,000	8.5 x 45	Steel	153,300,000	0.297	1.303	0.006	0.026			3106.42	56.05	2605.57	38.37	3.66	10.97	3.05	2549.62	5712.09
23E	Settling Tank 5 (ST 5)	21,000	8.5 x 45	Steel	153,300,000	0.297	1.303	0.006	0.026			3106.42	56.05	2605.57	38.37	3.66	10.97	3.05	2549.62	5712.09
24E	Effluent Tank 1 (ET 1)	21,000	8.5 x 45	Steel	13,775,000	0.033	0.146	0.001	0.001	Effluent water storage, closed top frac tanks manifolded together; 1/12 of material goes through each tank	Assuming 100,000ppm VOC (10%); RVP 6 plus BTEX	345.68	6.3	292.75	4.32	0.41	1.28	0.34	285.43	642.61
25E	Effluent Tank 2 (ET 2)	21,000	8.5 x 45	Steel	13,775,000	0.033	0.146	0.001	0.001			345.68	6.3	292.75	4.32	0.41	1.28	0.34	285.43	642.61
26E	Effluent Tank 3 (ET 3)	21,000	8.5 x 45	Steel	13,775,000	0.033	0.146	0.001	0.001			345.68	6.3	292.75	4.32	0.41	1.28	0.34	285.43	642.61
27E	Effluent Tank 4 (ET 4)	21,000	8.5 x 45	Steel	13,775,000	0.033	0.146	0.001	0.001			345.68	6.3	292.75	4.32	0.41	1.28	0.34	285.43	642.61
28E	Effluent Tank 5 (ET 5)	21,000	8.5 x 45	Steel	13,775,000	0.033	0.146	0.001	0.001			345.68	6.3	292.75	4.32	0.41	1.28	0.34	285.43	642.61
29E	Effluent Tank 6 (ET 6)	21,000	8.5 x 45	Steel	13,775,000	0.033	0.146	0.001	0.001			345.68	6.3	292.75	4.32	0.41	1.28	0.34	285.43	642.61
30E	Effluent Tank 7 (ET 7)	21,000	8.5 x 45	Steel	13,775,000	0.033	0.146	0.001	0.001			345.68	6.3	292.75	4.32	0.41	1.28	0.34	285.43	642.61
31E	Effluent Tank 8 (ET 8)	21,000	8.5 x 45	Steel	13,775,000	0.033	0.146	0.001	0.001			345.68	6.3	292.75	4.32	0.41	1.28	0.34	285.43	642.61
32E	Effluent Tank 9 (ET 9)	21,000	8.5 x 45	Steel	13,775,000	0.033	0.146	0.001	0.001			345.68	6.3	292.75	4.32	0.41	1.28	0.34	285.43	642.61
33E	Effluent Tank 10 (ET 10)	21,000	8.5 x 45	Steel	13,775,000	0.033	0.146	0.001	0.001			345.68	6.3	292.75	4.32	0.41	1.28	0.34	285.43	642.61
34E	Effluent Tank 11 (ET 11)	21,000	8.5 x 45	Steel	13,775,000	0.033	0.146	0.001	0.001			345.68	6.3	292.75	4.32	0.41	1.28	0.34	285.43	642.61
35E	Effluent Tank 12 (ET 12)	21,000	8.5 x 45	Steel	13,775,000	0.033	0.146	0.001	0.001			345.68	6.3	292.75	4.32	0.41	1.28	0.34	285.43	642.61
36E	Sludge Influent Tank 1 (SI1)	21,000	8.5 x 45	Steel	15,069,390	0.038	0.165	0.001	0.004	Closed top frac tank to feed press	Assuming 100,000ppm VOC (10%); RVP 6 plus BTEX	394.89	7.11	330.49	4.87	0.46	1.39	0.39	323.38	725.38
37E	Sludge Influent Tank 2 (SI2)	21,000	8.5 x 45	Steel	15,069,390	0.038	0.165	0.001	0.004			394.89	7.11	330.49	4.87	0.46	1.39	0.39	323.38	725.38
38E	Filtrate Water Tank 1 (FT)	21,000	8.5 x 45	Steel	9,041,634	0.023	0.100	0.001	0.002	Closed top frac tank post sludge press filtrate	Assuming 100,000ppm VOC (10%); RVP 6 plus BTEX	276.05	4.99	231.79	3.43	0.32	0.98	0.27	226.8	507.84
39E	Brine Mixing Tank 1 (BMT1)	2,750	7 x 10	Steel	360,000	0.002	0.008	0.00004	0.0002	Open top tank w/ recirculation & chemical pressure	Assuming 100,000ppm VOC (10%); RVP 6 plus BTEX	17.24	0.33	15.58	0.13	0.02	0.06	0.02	15.62	33.2
0E	Water Loadout (WL1)				3.930	2.753	0.014	0.088		(see "Water Loadout" tab)										
1E	Sludge Loadout (SL1)				3.648	0.195	0.001	0.008		(see "Sludge Loadout" tab)										

VOC emissions		HAP emissions	
lb/hr	ton/yr	lb/hr	ton/yr
3.700	16.206	0.080	0.349

	B	T	E	X
	3.54	0.34	1.01	0.28
lb/hr	0.00040411	3.88E-05	0.000115	3.2E-05
ton/yr	0.00177	0.00017	0.000505	0.00014

	B	T	E	X
	34.97	2.83	10.97	3.05
lb/hr	0.00438017	0.000418	0.001252	0.000348
ton/yr	0.019185	0.00183	0.005485	0.001525

	B	T	E	X
	4.87	0.41	2.28	0.34
lb/hr	0.000493151	4.68E-05	0.00014	3.83E-05
ton/yr	0.00216	0.000205	0.000615	0.00017

	B	T	E	X
	4.87	0.46	1.39	0.39
lb/hr	0.000555936	5.25E-05	0.000159	4.45E-05
ton/yr	0.002435	0.00023	0.000695	0.000195

	3.91	0.33	0.98	0.27
lb/hr	0.000389269	3.77E-05	0.000112	3.08E-05
ton/yr	0.001705	0.000165	0.00049	0.000135

Water Loadout (W-1) Calculations

Assumptions: Based on January- 100,000 ppm (10%) mass fraction of emissions (lb)
Based on 420,000 gal/day
Used TANKS data for speciation

Equation: 12.46 SPM/T

5/24/2016

Emissions from ET - TANKS Calculation			W-1 Emissions based on Loadout		
lbs/year	%total		lb/day	ton/year	
642.61	1.0000	TOTAL	33.21	6.06	
4.32	0.0067	**Benzene**	0.22	0.04	
0.41	0.0006	**Ethylbenzene**	0.02	0.004	
286.43	0.4457	**Gasoline**	14.80	2.70	
1.23	0.0019	**Toluene**	0.06	0.01	
349.88	0.5445	**Water**	18.08	3.30	
0.34	0.0005	**Xylene**	0.02	0.002	
		HAPS	**0.326**	**0.058**	**HAPS Loadout Emissions in Tons/YR**
		VOCs	**15.126**	**2.759**	**VOCs Loadout Emissions in Tons/YR**

Variable	Value	Unit	
T	517.22	R	Liquid Bulk Temperature from TANKS
M	19.5	lb/lb - mole	Conservative Molecular Weight
P	0.2805	psia	Average at Liquid Bulk Temperature
S	0.6	saturation factor	

0.08 lb/10^3 gal
33.21 lb/day based on 10,000 bbl / day
6.06 ton/yr
Total Emissions

Sludge Loadout (SL-1) Calculations

5/24/2016

Assumptions: Based on January -100,000ppm mass fraction of emissions (lb); 700bbl/day of sludge
700 bbl of sludge per day @ 60% moisture. Liquid assumed to be 100,000ppm VOC.
700 bbl based on proposed process water balance of 70bbl of sludge per 1000bbl of influent.

Emissions from ET - TANKS Calculation			W-1 Emissions based on Loadout	
lbs/year	%total		lb/day	ton/year
642.61	1.0000	TOTAL	2.32	0.42
4.32	0.0067	**Benzene**	0.02	0.00
0.41	0.0006	**Ethylene**	0.00	0.000
286.43	0.4457	**Gasoline**	1.04	0.19
1.23	0.0019	**Toluene**	0.00	0.00
349.88	0.5445	**Water**	1.27	0.23
0.34	0.0005	**Xylene**	0.00	0.002
		HAPS	**0.023**	**0.006**
		VOCs	**1.059**	**0.195**

Equation: 12.46 SPM/T

Variable	Value	Unit	
T	517.22	R	Bulk Temperature from TANKS
M	19.5	lb/lb - mole	Conservative Molecular Weight
P	0.2805	psia	Average at Liquid Bulk Temperatur
S	0.6	saturation factor	

0.08 lb/10^3 gal

2.32 lb/day based on 700 bbl / day

0.42 ton/yr

Total Emissions

Process Description

Waters, typically high in Total Suspended Solids (TSS), generated by Oil and Gas Exploration and Production activities will be collected in atmospheric tanker trucks at various client locations and sent to Central Station for recycle. Since all influent liquids have been subjected to significant weathering in an open atmosphere condition, flash emissions have occurred prior to shipping to Central Station.

When a truck enters the facility, a sample will be collected and reviewed to determine if the material is acceptable. Unacceptable materials will be immediately rejected. Acceptable material will be off-loaded via electrically operated pumps and sent to the influent storage tanks (ITS1-16; 1E-16E) via the influent header pipe system. If upon triage trucks are determined to have an influent with a TSS >50,000mg/L the client will have the option to bypass treatment and go directly to the filter press.

From the influent tanks the water will flow through a series of static mixers (WT1-2; 17E-18E) where treatment chemicals to adjust pH and flocculants to settle solids will be added. Treatment chemicals are brought to the site in totes and stored in four 300-gallon day tanks. The materials, including sodium hydroxide, flocculants and settling agents, are non-volatile and will not contribute any criteria pollutant emissions. The water will then pass through a series of settling tanks (ST1-5; 19E-23E) allowing time for solids to settle. The post treatment water then flows to multiple effluent holding tanks (ET1-12; 24E-35E). From the holding tanks the water is pumped back into tanker trucks for reuse at oil and gas facilities. Additionally, a brine mixing tank may possibly be installed at the facility. A portion of effluent water would flow from the holding tanks to the 90 bbl open top brine mixing tank (BM1; 39E), which would employ two electrical pumps to mix salt and water up to a desired specific gravity. If installed, emissions from the brine mixing process would be de minimis.

Collected solids are pumped to several dewatering tanks where liquids are allowed settle (SI1-2; 36E-37E). The sludge is the processed through a filter press to render the wet cake material acceptable for landfilling (FT1; 38E). Any water decanted or pressed from the sludge is used for recycling purposes.

TANKS 4.0.9d
Emissions Report - Detail Format
Tank Indentification and Physical Characteristics

Identification

User Identification:	ITS 1-16
City:	
State:	West Virginia
Company:	Shalewater Solutions LLC.
Type of Tank:	Horizontal Tank
Description:	16 - 21,000gal Influent Storage Tanks (closed-roof frac tanks)

Tank Dimensions

Shell Length (ft):	45.00
Diameter (ft):	8.50
Volume (gallons):	17,000.00
Turnovers:	563.60
Net Throughput(gal/yr):	9,581,250.00
Is Tank Heated (y/n):	N
Is Tank Underground (y/n):	N

Paint Characteristics

Shell Color/Shade:	Gray/Light
Shell Condition	Good

Breather Vent Settings

Vacuum Settings (psig):	-0.03
Pressure Settings (psig)	0.03

Meterological Data used in Emissions Calculations: Charleston, West Virginia (Avg Atmospheric Pressure = 14.25 psia)

TANKS 4.0.9d
Emissions Report - Detail Format
Liquid Contents of Storage Tank

ITS 1-16 - Horizontal Tank
, West Virginia

Mixture/Component	Month	Daily Liquid Surf. Temperature (deg F) Avg.	Min.	Max.	Liquid Bulk Temp (deg F)	Vapor Pressure (psia) Avg.	Min.	Max.	Vapor Mol. Weight.	Liquid Mass Fract.	Vapor Mass Fract.	Mol. Weight	Basis for Vapor Pressure Calculations
100,000ppm (10%) VOC HEP Shalewater	Jan	48.84	43.20	54.48	57.22	0.2111	0.1737	0.2555	28.9541			19.59	
Benzene						0.8499	0.7189	1.0001	78.1100	0.0025	0.0068	78.11	Option 2: A=6.905, B=1211.033, C=220.79
Ethylbenzene						0.0728	0.0590	0.0893	106.1700	0.0025	0.0006	106.17	Option 2: A=6.975, B=1424.255, C=213.21
Gasoline (RVP 6)						2.3151	2.0453	2.6133	69.0000	0.0900	0.5010	92.00	Option 4: RVP=6, ASTM Slope=3
Toluene						0.2310	0.1914	0.2774	92.1300	0.0025	0.0019	92.13	Option 2: A=6.954, B=1344.8, C=219.48
Water						0.1696	0.1368	0.2090	18.0150	0.9000	0.4893	18.02	Option 2: A=8.07131, B=1730.63, C=233.426
Xylenes (mixed isomers)						0.0604	0.0488	0.0742	106.1700	0.0025	0.0005	106.17	Option 2: A=7.009, B=1462.266, C=215.11
100,000ppm (10%) VOC HEP Shalewater	Feb	51.29	44.55	58.03	57.22	0.2294	0.1821	0.2877	28.6297			19.59	
Benzene						0.9127	0.7487	1.1056	78.1100	0.0025	0.0068	78.11	Option 2: A=6.905, B=1211.033, C=220.79
Ethylbenzene						0.0796	0.0621	0.1013	106.1700	0.0025	0.0006	106.17	Option 2: A=6.975, B=1424.255, C=213.21
Gasoline (RVP 6)						2.4411	2.1076	2.8166	69.0000	0.0900	0.4914	92.00	Option 4: RVP=6, ASTM Slope=3
Toluene						0.2503	0.2004	0.3104	92.1300	0.0025	0.0019	92.13	Option 2: A=6.954, B=1344.8, C=219.48
Water						0.1858	0.1441	0.2378	18.0150	0.9000	0.4988	18.02	Option 2: A=8.07131, B=1730.63, C=233.426
Xylenes (mixed isomers)						0.0661	0.0514	0.0843	106.1700	0.0025	0.0005	106.17	Option 2: A=7.009, B=1462.266, C=215.11
100,000ppm (10%) VOC HEP Shalewater	Mar	57.27	48.89	65.66	57.22	0.2805	0.2114	0.3693	27.8856			19.59	
Benzene						1.0823	0.8511	1.3634	78.1100	0.0025	0.0068	78.11	Option 2: A=6.905, B=1211.033, C=220.79
Ethylbenzene						0.0986	0.0729	0.1318	106.1700	0.0025	0.0006	106.17	Option 2: A=6.975, B=1424.255, C=213.21
Gasoline (RVP 6)						2.7720	2.3176	3.2966	69.0000	0.0900	0.4686	92.00	Option 4: RVP=6, ASTM Slope=3
Toluene						0.3031	0.2314	0.3928	92.1300	0.0025	0.0019	92.13	Option 2: A=6.954, B=1344.8, C=219.48
Water						0.2314	0.1699	0.3115	18.0150	0.9000	0.5215	18.02	Option 2: A=8.07131, B=1730.63, C=233.426
Xylenes (mixed isomers)						0.0821	0.0605	0.1100	106.1700	0.0025	0.0005	106.17	Option 2: A=7.009, B=1462.266, C=215.11
100,000ppm (10%) VOC HEP Shalewater	Apr	62.62	52.57	72.66	57.22	0.3346	0.2396	0.4619	27.2734			19.59	
Benzene						1.2553	0.9470	1.6425	78.1100	0.0025	0.0067	78.11	Option 2: A=6.905, B=1211.033, C=220.79
Ethylbenzene						0.1188	0.0834	0.1665	106.1700	0.0025	0.0006	106.17	Option 2: A=6.975, B=1424.255, C=213.21
Gasoline (RVP 6)						3.0979	2.5091	3.7946	69.0000	0.0900	0.4490	92.00	Option 4: RVP=6, ASTM Slope=3
Toluene						0.3580	0.2609	0.4842	92.1300	0.0025	0.0019	92.13	Option 2: A=6.954, B=1344.8, C=219.48
Water						0.2801	0.1949	0.3962	18.0150	0.9000	0.5412	18.02	Option 2: A=8.07131, B=1730.63, C=233.426
Xylenes (mixed isomers)						0.0990	0.0693	0.1392	106.1700	0.0025	0.0005	106.17	Option 2: A=7.009, B=1462.266, C=215.11
100,000ppm (10%) VOC HEP Shalewater	May	67.58	56.53	78.63	57.22	0.3929	0.2737	0.5565	26.7465			19.59	
Benzene						1.4358	1.0599	1.9158	78.1100	0.0025	0.0067	78.11	Option 2: A=6.905, B=1211.033, C=220.79
Ethylbenzene						0.1406	0.0961	0.2018	106.1700	0.0025	0.0007	106.17	Option 2: A=6.975, B=1424.255, C=213.21
Gasoline (RVP 6)						3.4276	2.7290	4.2650	69.0000	0.0900	0.4314	92.00	Option 4: RVP=6, ASTM Slope=3
Toluene						0.4163	0.2961	0.5755	92.1300	0.0025	0.0019	92.13	Option 2: A=6.954, B=1344.8, C=219.48
Water						0.3330	0.2252	0.4833	18.0150	0.9000	0.5588	18.02	Option 2: A=8.07131, B=1730.63, C=233.426
Xylenes (mixed isomers)						0.1174	0.0799	0.1691	106.1700	0.0025	0.0005	106.17	Option 2: A=7.009, B=1462.266, C=215.11
100,000ppm (10%) VOC HEP Shalewater	Jun	71.63	60.22	83.05	57.22	0.4471	0.3092	0.6373	26.3434			19.59	
Benzene						1.5988	1.1749	2.1416	78.1100	0.0025	0.0066	78.11	Option 2: A=6.905, B=1211.033, C=220.79
Ethylbenzene						0.1609	0.1094	0.2321	106.1700	0.0025	0.0007	106.17	Option 2: A=6.975, B=1424.255, C=213.21
Gasoline (RVP 6)						3.7178	2.9479	4.6432	69.0000	0.0900	0.4174	92.00	Option 4: RVP=6, ASTM Slope=3
Toluene						0.4697	0.3324	0.6521	92.1300	0.0025	0.0020	92.13	Option 2: A=6.954, B=1344.8, C=219.48
Water						0.3826	0.2572	0.5583	18.0150	0.9000	0.5727	18.02	Option 2: A=8.07131, B=1730.63, C=233.426
Xylenes (mixed isomers)						0.1345	0.0911	0.1947	106.1700	0.0025	0.0006	106.17	Option 2: A=7.009, B=1462.266, C=215.11
100,000ppm (10%) VOC HEP Shalewater	Jul	72.90	62.13	83.68	57.22	0.4654	0.3292	0.6497	26.2220			19.59	
Benzene						1.6529	1.2384	2.1756	78.1100	0.0025	0.0066	78.11	Option 2: A=6.905, B=1211.033, C=220.79

Ethylbenzene						0.1678	0.1168	0.2367	106.1700	0.0025	0.0007	106.17	Option 2: A=6.975, B=1424.255, C=213.21
Gasoline (RVP 6)						3.8127	3.0666	4.6994	69.0000	0.0900	0.4131	92.00	Option 4: RVP=6, ASTM Slope=3
Toluene						0.4876	0.3526	0.6637	92.1300	0.0025	0.0020	92.13	Option 2: A=6.954, B=1344.8, C=219.48
Water						0.3994	0.2752	0.5698	18.0150	0.9000	0.5770	18.02	Option 2: A=8.07131, B=1730.63, C=233.426
Xylenes (mixed isomers)						0.1403	0.0974	0.1987	106.1700	0.0025	0.0006	106.17	Option 2: A=7.009, B=1462.266, C=215.11
100,000ppm (10%) VOC HEP Shalewater	Aug	71.71	61.60	81.82	57.22	0.4482	0.3235	0.6139	26.3362			19.59	
Benzene						1.6019	1.2205	2.0768	78.1100	0.0025	0.0066	78.11	Option 2: A=6.905, B=1211.033, C=220.79
Ethylbenzene						0.1613	0.1147	0.2233	106.1700	0.0025	0.0007	106.17	Option 2: A=6.975, B=1424.255, C=213.21
Gasoline (RVP 6)						3.7233	3.0332	4.5356	69.0000	0.0900	0.4172	92.00	Option 4: RVP=6, ASTM Slope=3
Toluene						0.4707	0.3469	0.6300	92.1300	0.0025	0.0020	92.13	Option 2: A=6.954, B=1344.8, C=219.48
Water						0.3836	0.2701	0.5365	18.0150	0.9000	0.5730	18.02	Option 2: A=8.07131, B=1730.63, C=233.426
Xylenes (mixed isomers)						0.1349	0.0956	0.1873	106.1700	0.0025	0.0006	106.17	Option 2: A=7.009, B=1462.266, C=215.11
100,000ppm (10%) VOC HEP Shalewater	Sep	67.66	58.46	76.85	57.22	0.3938	0.2918	0.5266	26.7387			19.59	
Benzene						1.4387	1.1190	1.8306	78.1100	0.0025	0.0067	78.11	Option 2: A=6.905, B=1211.033, C=220.79
Ethylbenzene						0.1410	0.1029	0.1907	106.1700	0.0025	0.0007	106.17	Option 2: A=6.975, B=1424.255, C=213.21
Gasoline (RVP 6)						3.4329	2.8420	4.1199	69.0000	0.0900	0.4311	92.00	Option 4: RVP=6, ASTM Slope=3
Toluene						0.4172	0.3147	0.5468	92.1300	0.0025	0.0019	92.13	Option 2: A=6.954, B=1344.8, C=219.48
Water						0.3339	0.2415	0.4557	18.0150	0.9000	0.5591	18.02	Option 2: A=8.07131, B=1730.63, C=233.426
Xylenes (mixed isomers)						0.1177	0.0856	0.1597	106.1700	0.0025	0.0005	106.17	Option 2: A=7.009, B=1462.266, C=215.11
100,000ppm (10%) VOC HEP Shalewater	Oct	61.24	52.96	69.51	57.22	0.3197	0.2428	0.4179	27.4272			19.59	
Benzene						1.2085	0.9576	1.5116	78.1100	0.0025	0.0067	78.11	Option 2: A=6.905, B=1211.033, C=220.79
Ethylbenzene						0.1133	0.0846	0.1500	106.1700	0.0025	0.0006	106.17	Option 2: A=6.975, B=1424.255, C=213.21
Gasoline (RVP 6)						3.0107	2.5300	3.5634	69.0000	0.0900	0.4540	92.00	Option 4: RVP=6, ASTM Slope=3
Toluene						0.3431	0.2642	0.4410	92.1300	0.0025	0.0019	92.13	Option 2: A=6.954, B=1344.8, C=219.48
Water						0.2667	0.1977	0.3559	18.0150	0.9000	0.5362	18.02	Option 2: A=8.07131, B=1730.63, C=233.426
Xylenes (mixed isomers)						0.0944	0.0703	0.1253	106.1700	0.0025	0.0005	106.17	Option 2: A=7.009, B=1462.266, C=215.11
100,000ppm (10%) VOC HEP Shalewater	Nov	55.53	49.19	61.88	57.22	0.2647	0.2136	0.3266	28.0954			19.59	
Benzene						1.0304	0.8585	1.2301	78.1100	0.0025	0.0068	78.11	Option 2: A=6.905, B=1211.033, C=220.79
Ethylbenzene						0.0927	0.0737	0.1158	106.1700	0.0025	0.0006	106.17	Option 2: A=6.975, B=1424.255, C=213.21
Gasoline (RVP 6)						2.6722	2.3326	3.0511	69.0000	0.0900	0.4752	92.00	Option 4: RVP=6, ASTM Slope=3
Toluene						0.2868	0.2337	0.3500	92.1300	0.0025	0.0019	92.13	Option 2: A=6.954, B=1344.8, C=219.48
Water						0.2172	0.1718	0.2728	18.0150	0.9000	0.5150	18.02	Option 2: A=8.07131, B=1730.63, C=233.426
Xylenes (mixed isomers)						0.0771	0.0612	0.0965	106.1700	0.0025	0.0005	106.17	Option 2: A=7.009, B=1462.266, C=215.11
100,000ppm (10%) VOC HEP Shalewater	Dec	50.60	45.34	55.85	57.22	0.2241	0.1871	0.2675	28.7203			19.59	
Benzene						0.8945	0.7666	1.0398	78.1100	0.0025	0.0068	78.11	Option 2: A=6.905, B=1211.033, C=220.79
Ethylbenzene						0.0776	0.0639	0.0938	106.1700	0.0025	0.0006	106.17	Option 2: A=6.975, B=1424.255, C=213.21
Gasoline (RVP 6)						2.4049	2.1448	2.6903	69.0000	0.0900	0.4941	92.00	Option 4: RVP=6, ASTM Slope=3
Toluene						0.2447	0.2058	0.2898	92.1300	0.0025	0.0019	92.13	Option 2: A=6.954, B=1344.8, C=219.48
Water						0.1811	0.1485	0.2198	18.0150	0.9000	0.4961	18.02	Option 2: A=8.07131, B=1730.63, C=233.426
Xylenes (mixed isomers)						0.0644	0.0530	0.0780	106.1700	0.0025	0.0005	106.17	Option 2: A=7.009, B=1462.266, C=215.11

TANKS 4.0.9d
Emissions Report - Detail Format
Detail Calculations (AP-42)

ITS 1-16 - Horizontal Tank
, West Virginia

Month:	January	February	March	April	May	June	July	August	September	October	November	December
Standing Losses (lb):	2.4760	2.9069	4.8065	6.5442	8.5942	9.6489	9.7294	8.7982	6.8674	5.2977	3.2866	2.4060
Vapor Space Volume (cu ft):	1,626.4495	1,626.4495	1,626.4495	1,626.4495	1,626.4495	1,626.4495	1,626.4495	1,626.4495	1,626.4495	1,626.4495	1,626.4495	1,626.4495
Vapor Density (lb/cu ft):	0.0011	0.0012	0.0014	0.0016	0.0019	0.0021	0.0021	0.0021	0.0019	0.0016	0.0013	0.0012
Vapor Space Expansion Factor:	0.0459	0.0560	0.0719	0.0886	0.0999	0.1054	0.0998	0.0928	0.0823	0.0718	0.0531	0.0426
Vented Vapor Saturation Factor:	0.9546	0.9509	0.9406	0.9299	0.9187	0.9085	0.9051	0.9083	0.9185	0.9328	0.9437	0.9519
Tank Vapor Space Volume:												
Vapor Space Volume (cu ft):	1,626.4495	1,626.4495	1,626.4495	1,626.4495	1,626.4495	1,626.4495	1,626.4495	1,626.4495	1,626.4495	1,626.4495	1,626.4495	1,626.4495
Tank Diameter (ft):	8.5000	8.5000	8.5000	8.5000	8.5000	8.5000	8.5000	8.5000	8.5000	8.5000	8.5000	8.5000
Effective Diameter (ft):	22.0740	22.0740	22.0740	22.0740	22.0740	22.0740	22.0740	22.0740	22.0740	22.0740	22.0740	22.0740
Vapor Space Outage (ft):	4.2500	4.2500	4.2500	4.2500	4.2500	4.2500	4.2500	4.2500	4.2500	4.2500	4.2500	4.2500
Tank Shell Length (ft):	45.0000	45.0000	45.0000	45.0000	45.0000	45.0000	45.0000	45.0000	45.0000	45.0000	45.0000	45.0000
Vapor Density												
Vapor Density (lb/cu ft):	0.0011	0.0012	0.0014	0.0016	0.0019	0.0021	0.0021	0.0021	0.0019	0.0016	0.0013	0.0012
Vapor Molecular Weight (lb/lb-mole):	28.9541	28.6297	27.8856	27.2734	26.7465	26.3434	26.2220	26.3362	26.7387	27.4272	28.0954	28.7203
Vapor Pressure at Daily Average Liquid Surface Temperature (psia):	0.2111	0.2294	0.2805	0.3346	0.3929	0.4471	0.4654	0.4482	0.3938	0.3197	0.2647	0.2241
Daily Avg. Liquid Surface Temp. (deg. R):	508.5095	510.9624	516.9429	522.2886	527.2494	531.3037	532.5737	531.3788	527.3254	520.9055	515.2035	510.2689
Daily Average Ambient Temp. (deg. F):	32.1000	35.5000	45.8500	54.8000	63.5000	71.4500	75.0500	73.9000	67.6500	56.2000	46.8000	37.0000
Ideal Gas Constant R (psia cuft / (lb-mol-deg R)):	10.731	10.731	10.731	10.731	10.731	10.731	10.731	10.731	10.731	10.731	10.731	10.731
Liquid Bulk Temperature (deg. R):	516.8933	516.8933	516.8933	516.8933	516.8933	516.8933	516.8933	516.8933	516.8933	516.8933	516.8933	516.8933
Tank Paint Solar Absorptance (Shell):	0.5400	0.5400	0.5400	0.5400	0.5400	0.5400	0.5400	0.5400	0.5400	0.5400	0.5400	0.5400
Daily Total Solar Insulation Factor (Btu/sqft day):	625.9737	850.2836	1,184.6862	1,514.6470	1,780.2020	1,910.5999	1,836.9933	1,675.5029	1,369.9719	1,046.0392	678.9578	533.0136
Vapor Space Expansion Factor												
Vapor Space Expansion Factor:	0.0459	0.0560	0.0719	0.0886	0.0999	0.1054	0.0998	0.0928	0.0823	0.0718	0.0531	0.0426
Daily Vapor Temperature Range (deg. R):	22.5687	26.9683	33.5365	40.1815	44.1967	45.6643	43.1113	40.4536	36.7700	33.0961	25.3858	21.0192
Daily Vapor Pressure Range (psia):	0.0818	0.1056	0.1579	0.2223	0.2828	0.3281	0.3205	0.2903	0.2348	0.1751	0.1130	0.0804
Breather Vent Press. Setting Range(psia):	0.0600	0.0600	0.0600	0.0600	0.0600	0.0600	0.0600	0.0600	0.0600	0.0600	0.0600	0.0600
Vapor Pressure at Daily Average Liquid Surface Temperature (psia):	0.2111	0.2294	0.2805	0.3346	0.3929	0.4471	0.4654	0.4482	0.3938	0.3197	0.2647	0.2241
Vapor Pressure at Daily Minimum Liquid Surface Temperature (psia):	0.1737	0.1821	0.2114	0.2396	0.2737	0.3092	0.3292	0.3235	0.2918	0.2428	0.2136	0.1871
Vapor Pressure at Daily Maximum Liquid Surface Temperature (psia):	0.2555	0.2877	0.3693	0.4619	0.5565	0.6373	0.6497	0.6139	0.5266	0.4179	0.3266	0.2675
Daily Avg. Liquid Surface Temp. (deg R):	508.5095	510.9624	516.9429	522.2886	527.2494	531.3037	532.5737	531.3788	527.3254	520.9055	515.2035	510.2689
Daily Min. Liquid Surface Temp. (deg R):	502.8673	504.2203	508.5588	512.2432	516.2002	519.8876	521.7958	521.2654	518.1329	512.6314	508.8570	505.0141
Daily Max. Liquid Surface Temp. (deg R):	514.1517	517.7044	525.3271	532.3339	538.2986	542.7198	543.3515	541.4922	536.5179	529.1795	521.5500	515.5237
Daily Ambient Temp. Range (deg. R):	18.2000	19.6000	21.7000	24.0000	24.0000	23.3000	21.3000	21.0000	22.3000	24.0000	21.0000	18.0000
Vented Vapor Saturation Factor												
Vented Vapor Saturation Factor:	0.9546	0.9509	0.9406	0.9299	0.9187	0.9085	0.9051	0.9083	0.9185	0.9328	0.9437	0.9519
Vapor Pressure at Daily Average Liquid: Surface Temperature (psia):	0.2111	0.2294	0.2805	0.3346	0.3929	0.4471	0.4654	0.4482	0.3938	0.3197	0.2647	0.2241
Vapor Space Outage (ft):	4.2500	4.2500	4.2500	4.2500	4.2500	4.2500	4.2500	4.2500	4.2500	4.2500	4.2500	4.2500
Working Losses (lb):	25.5452	27.4604	32.6984	38.1425	43.9259	49.2359	51.0158	49.3395	44.0204	36.6594	31.0872	26.9059
Vapor Molecular Weight (lb/lb-mole):	28.9541	28.6297	27.8856	27.2734	26.7465	26.3434	26.2220	26.3362	26.7387	27.4272	28.0954	28.7203
Vapor Pressure at Daily Average Liquid Surface Temperature (psia):	0.2111	0.2294	0.2805	0.3346	0.3929	0.4471	0.4654	0.4482	0.3938	0.3197	0.2647	0.2241
Net Throughput (gal/mo.):	798,437.5000	798,437.5000	798,437.5000	798,437.5000	798,437.5000	798,437.5000	798,437.5000	798,437.5000	798,437.5000	798,437.5000	798,437.5000	798,437.5000
Annual Turnovers:	563.6029	563.6029	563.6029	563.6029	563.6029	563.6029	563.6029	563.6029	563.6029	563.6029	563.6029	563.6029
Turnover Factor:	0.2199	0.2199	0.2199	0.2199	0.2199	0.2199	0.2199	0.2199	0.2199	0.2199	0.2199	0.2199

Tank Diameter (ft):	8.5000	8.5000	8.5000	8.5000	8.5000	8.5000	8.5000	8.5000	8.5000	8.5000	8.5000	8.5000
Working Loss Product Factor:	1.0000	1.0000	1.0000	1.0000	1.0000	1.0000	1.0000	1.0000	1.0000	1.0000	1.0000	1.0000
Total Losses (lb):	28.0212	30.3672	37.5048	44.6867	52.5202	58.8848	60.7452	58.1378	50.8878	41.9571	34.3738	29.3119

TANKS 4.0.9d
Emissions Report - Detail Format
Individual Tank Emission Totals

Emissions Report for: Annual

ITS 1-16 - Horizontal Tank
, West Virginia

	Losses(lbs)		
Components	Working Loss	Breathing Loss	Total Emissions
100,000ppm (10%) VOC HEP Shalewater	456.04	71.36	527.40
Benzene	3.06	0.48	3.54
Ethylbenzene	0.29	0.05	0.34
Gasoline (RVP 6)	203.59	31.40	234.99
Toluene	0.88	0.14	1.01
Water	247.97	39.26	287.23
Xylenes (mixed isomers)	0.24	0.04	0.28

TANKS 4.0.9d
Emissions Report - Detail Format
Tank Indentification and Physical Characteristics

Identification

User Identification:	WT 1-2
City:	
State:	West Virginia
Company:	HEP Shalewater Solutions LLC.
Type of Tank:	Horizontal Tank
Description:	2 - 21,000gal Weir Tanks (closed-roof frac tanks)

Tank Dimensions

Shell Length (ft):	45.00
Diameter (ft):	8.50
Volume (gallons):	17,000.00
Turnovers:	9,017.65
Net Throughput(gal/yr):	153,300,000.00
Is Tank Heated (y/n):	N
Is Tank Underground (y/n):	N

Paint Characteristics

Shell Color/Shade:	Gray/Light
Shell Condition	Good

Breather Vent Settings

Vacuum Settings (psig):	-0.03
Pressure Settings (psig)	0.03

Meterological Data used in Emissions Calculations: Charleston, West Virginia (Avg Atmospheric Pressure = 14.25 psia)

TANKS 4.0.9d
Emissions Report - Detail Format
Liquid Contents of Storage Tank

WT 1-2 - Horizontal Tank
, West Virginia

Mixture/Component	Month	Daily Liquid Surf. Temperature (deg F) Avg.	Min.	Max.	Liquid Bulk Temp (deg F)	Vapor Pressure (psia) Avg.	Min.	Max.	Vapor Mol. Weight.	Liquid Mass Fract.	Vapor Mass Fract.	Mol. Weight	Basis for Vapor Pressure Calculations
100,000ppm VOC (10%) HEP Shalewater	Jan	48.84	43.20	54.48	57.22	0.2111	0.1737	0.2555	28.9541			19.59	
Benzene						0.8499	0.7189	1.0001	78.1100	0.0025	0.0068	78.11	Option 2: A=6.905, B=1211.033, C=220.79
Ethylbenzene						0.0728	0.0590	0.0893	106.1700	0.0025	0.0006	106.17	Option 2: A=6.975, B=1424.255, C=213.21
Gasoline (RVP 6)						2.3151	2.0453	2.6133	69.0000	0.0900	0.5010	92.00	Option 4: RVP=6, ASTM Slope=3
Toluene						0.2310	0.1914	0.2774	92.1300	0.0025	0.0019	92.13	Option 2: A=6.954, B=1344.8, C=219.48
Water						0.1696	0.1368	0.2090	18.0150	0.9000	0.4893	18.02	Option 2: A=8.07131, B=1730.63, C=233.426
Xylenes (mixed isomers)						0.0604	0.0488	0.0742	106.1700	0.0025	0.0005	106.17	Option 2: A=7.009, B=1462.266, C=215.11
100,000ppm VOC (10%) HEP Shalewater	Feb	51.29	44.55	58.03	57.22	0.2294	0.1821	0.2877	28.6297			19.59	
Benzene						0.9127	0.7487	1.1056	78.1100	0.0025	0.0068	78.11	Option 2: A=6.905, B=1211.033, C=220.79
Ethylbenzene						0.0796	0.0621	0.1013	106.1700	0.0025	0.0006	106.17	Option 2: A=6.975, B=1424.255, C=213.21
Gasoline (RVP 6)						2.4411	2.1076	2.8166	69.0000	0.0900	0.4914	92.00	Option 4: RVP=6, ASTM Slope=3
Toluene						0.2503	0.2004	0.3104	92.1300	0.0025	0.0019	92.13	Option 2: A=6.954, B=1344.8, C=219.48
Water						0.1858	0.1441	0.2378	18.0150	0.9000	0.4968	18.02	Option 2: A=8.07131, B=1730.63, C=233.426
Xylenes (mixed isomers)						0.0661	0.0514	0.0843	106.1700	0.0025	0.0005	106.17	Option 2: A=7.009, B=1462.266, C=215.11
100,000ppm VOC (10%) HEP Shalewater	Mar	57.27	48.89	65.66	57.22	0.2805	0.2114	0.3693	27.8856			19.59	
Benzene						1.0823	0.8511	1.3634	78.1100	0.0025	0.0068	78.11	Option 2: A=6.905, B=1211.033, C=220.79
Ethylbenzene						0.0986	0.0729	0.1318	106.1700	0.0025	0.0006	106.17	Option 2: A=6.975, B=1424.255, C=213.21
Gasoline (RVP 6)						2.7720	2.3176	3.2966	69.0000	0.0900	0.4686	92.00	Option 4: RVP=6, ASTM Slope=3
Toluene						0.3031	0.2314	0.3928	92.1300	0.0025	0.0019	92.13	Option 2: A=6.954, B=1344.8, C=219.48
Water						0.2314	0.1699	0.3115	18.0150	0.9000	0.5215	18.02	Option 2: A=8.07131, B=1730.63, C=233.426
Xylenes (mixed isomers)						0.0821	0.0605	0.1100	106.1700	0.0025	0.0005	106.17	Option 2: A=7.009, B=1462.266, C=215.11
100,000ppm VOC (10%) HEP Shalewater	Apr	62.62	52.57	72.66	57.22	0.3346	0.2396	0.4619	27.2734			19.59	
Benzene						1.2553	0.9470	1.6425	78.1100	0.0025	0.0067	78.11	Option 2: A=6.905, B=1211.033, C=220.79
Ethylbenzene						0.1188	0.0834	0.1665	106.1700	0.0025	0.0006	106.17	Option 2: A=6.975, B=1424.255, C=213.21
Gasoline (RVP 6)						3.0979	2.5091	3.7946	69.0000	0.0900	0.4490	92.00	Option 4: RVP=6, ASTM Slope=3
Toluene						0.3580	0.2609	0.4842	92.1300	0.0025	0.0019	92.13	Option 2: A=6.954, B=1344.8, C=219.48
Water						0.2801	0.1949	0.3962	18.0150	0.9000	0.5412	18.02	Option 2: A=8.07131, B=1730.63, C=233.426
Xylenes (mixed isomers)						0.0990	0.0693	0.1392	106.1700	0.0025	0.0005	106.17	Option 2: A=7.009, B=1462.266, C=215.11
100,000ppm VOC (10%) HEP Shalewater	May	67.58	56.53	78.63	57.22	0.3929	0.2737	0.5565	26.7465			19.59	
Benzene						1.4358	1.0599	1.9158	78.1100	0.0025	0.0067	78.11	Option 2: A=6.905, B=1211.033, C=220.79
Ethylbenzene						0.1406	0.0961	0.2018	106.1700	0.0025	0.0007	106.17	Option 2: A=6.975, B=1424.255, C=213.21
Gasoline (RVP 6)						3.4276	2.7290	4.2650	69.0000	0.0900	0.4314	92.00	Option 4: RVP=6, ASTM Slope=3
Toluene						0.4163	0.2961	0.5755	92.1300	0.0025	0.0019	92.13	Option 2: A=6.954, B=1344.8, C=219.48
Water						0.3330	0.2252	0.4833	18.0150	0.9000	0.5588	18.02	Option 2: A=8.07131, B=1730.63, C=233.426
Xylenes (mixed isomers)						0.1174	0.0799	0.1691	106.1700	0.0025	0.0005	106.17	Option 2: A=7.009, B=1462.266, C=215.11
100,000ppm VOC (10%) HEP Shalewater	Jun	71.63	60.22	83.05	57.22	0.4471	0.3092	0.6373	26.3434			19.59	
Benzene						1.5988	1.1749	2.1416	78.1100	0.0025	0.0066	78.11	Option 2: A=6.905, B=1211.033, C=220.79
Ethylbenzene						0.1609	0.1094	0.2321	106.1700	0.0025	0.0007	106.17	Option 2: A=6.975, B=1424.255, C=213.21
Gasoline (RVP 6)						3.7178	2.9479	4.6432	69.0000	0.0900	0.4174	92.00	Option 4: RVP=6, ASTM Slope=3
Toluene						0.4697	0.3324	0.6521	92.1300	0.0025	0.0020	92.13	Option 2: A=6.954, B=1344.8, C=219.48
Water						0.3826	0.2572	0.5583	18.0150	0.9000	0.5727	18.02	Option 2: A=8.07131, B=1730.63, C=233.426
Xylenes (mixed isomers)						0.1345	0.0911	0.1947	106.1700	0.0025	0.0006	106.17	Option 2: A=7.009, B=1462.266, C=215.11
100,000ppm VOC (10%) HEP Shalewater	Jul	72.90	62.13	83.68	57.22	0.4654	0.3292	0.6497	26.2220			19.59	
Benzene						1.6529	1.2384	2.1756	78.1100	0.0025	0.0066	78.11	Option 2: A=6.905, B=1211.033, C=220.79

Ethylbenzene						0.1678	0.1168	0.2367	106.1700	0.0025	0.0007	106.17	Option 2: A=6.975, B=1424.255, C=213.21
Gasoline (RVP 6)						3.8127	3.0666	4.6994	69.0000	0.0900	0.4131	92.00	Option 4: RVP=6, ASTM Slope=3
Toluene						0.4876	0.3526	0.6637	92.1300	0.0025	0.0020	92.13	Option 2: A=6.954, B=1344.8, C=219.48
Water						0.3994	0.2752	0.5698	18.0150	0.9000	0.5770	18.02	Option 2: A=8.07131, B=1730.63, C=233.426
Xylenes (mixed isomers)						0.1403	0.0974	0.1987	106.1700	0.0025	0.0006	106.17	Option 2: A=7.009, B=1462.266, C=215.11
100,000ppm VOC (10%) HEP Shalewater	Aug	71.71	61.60	81.82	57.22	0.4482	0.3235	0.6139	26.3362			19.59	
Benzene						1.6019	1.2205	2.0768	78.1100	0.0025	0.0066	78.11	Option 2: A=6.905, B=1211.033, C=220.79
Ethylbenzene						0.1613	0.1147	0.2233	106.1700	0.0025	0.0007	106.17	Option 2: A=6.975, B=1424.255, C=213.21
Gasoline (RVP 6)						3.7233	3.0332	4.5356	69.0000	0.0900	0.4172	92.00	Option 4: RVP=6, ASTM Slope=3
Toluene						0.4707	0.3469	0.6300	92.1300	0.0025	0.0020	92.13	Option 2: A=6.954, B=1344.8, C=219.48
Water						0.3836	0.2701	0.5365	18.0150	0.9000	0.5730	18.02	Option 2: A=8.07131, B=1730.63, C=233.426
Xylenes (mixed isomers)						0.1349	0.0956	0.1873	106.1700	0.0025	0.0006	106.17	Option 2: A=7.009, B=1462.266, C=215.11
100,000ppm VOC (10%) HEP Shalewater	Sep	67.66	58.46	76.85	57.22	0.3938	0.2918	0.5266	26.7387			19.59	
Benzene						1.4387	1.1190	1.8306	78.1100	0.0025	0.0067	78.11	Option 2: A=6.905, B=1211.033, C=220.79
Ethylbenzene						0.1410	0.1029	0.1907	106.1700	0.0025	0.0007	106.17	Option 2: A=6.975, B=1424.255, C=213.21
Gasoline (RVP 6)						3.4329	2.8420	4.1199	69.0000	0.0900	0.4311	92.00	Option 4: RVP=6, ASTM Slope=3
Toluene						0.4172	0.3147	0.5468	92.1300	0.0025	0.0019	92.13	Option 2: A=6.954, B=1344.8, C=219.48
Water						0.3339	0.2415	0.4557	18.0150	0.9000	0.5591	18.02	Option 2: A=8.07131, B=1730.63, C=233.426
Xylenes (mixed isomers)						0.1177	0.0856	0.1597	106.1700	0.0025	0.0005	106.17	Option 2: A=7.009, B=1462.266, C=215.11
100,000ppm VOC (10%) HEP Shalewater	Oct	61.24	52.96	69.51	57.22	0.3197	0.2428	0.4179	27.4272			19.59	
Benzene						1.2085	0.9576	1.5116	78.1100	0.0025	0.0067	78.11	Option 2: A=6.905, B=1211.033, C=220.79
Ethylbenzene						0.1133	0.0846	0.1500	106.1700	0.0025	0.0006	106.17	Option 2: A=6.975, B=1424.255, C=213.21
Gasoline (RVP 6)						3.0107	2.5300	3.5634	69.0000	0.0900	0.4540	92.00	Option 4: RVP=6, ASTM Slope=3
Toluene						0.3431	0.2642	0.4410	92.1300	0.0025	0.0019	92.13	Option 2: A=6.954, B=1344.8, C=219.48
Water						0.2667	0.1977	0.3559	18.0150	0.9000	0.5362	18.02	Option 2: A=8.07131, B=1730.63, C=233.426
Xylenes (mixed isomers)						0.0944	0.0703	0.1253	106.1700	0.0025	0.0005	106.17	Option 2: A=7.009, B=1462.266, C=215.11
100,000ppm VOC (10%) HEP Shalewater	Nov	55.53	49.19	61.88	57.22	0.2647	0.2136	0.3266	28.0954			19.59	
Benzene						1.0304	0.8585	1.2301	78.1100	0.0025	0.0068	78.11	Option 2: A=6.905, B=1211.033, C=220.79
Ethylbenzene						0.0927	0.0737	0.1158	106.1700	0.0025	0.0006	106.17	Option 2: A=6.975, B=1424.255, C=213.21
Gasoline (RVP 6)						2.6722	2.3326	3.0511	69.0000	0.0900	0.4752	92.00	Option 4: RVP=6, ASTM Slope=3
Toluene						0.2868	0.2337	0.3500	92.1300	0.0025	0.0019	92.13	Option 2: A=6.954, B=1344.8, C=219.48
Water						0.2172	0.1718	0.2728	18.0150	0.9000	0.5150	18.02	Option 2: A=8.07131, B=1730.63, C=233.426
Xylenes (mixed isomers)						0.0771	0.0612	0.0965	106.1700	0.0025	0.0005	106.17	Option 2: A=7.009, B=1462.266, C=215.11
100,000ppm VOC (10%) HEP Shalewater	Dec	50.60	45.34	55.85	57.22	0.2241	0.1871	0.2675	28.7203			19.59	
Benzene						0.8945	0.7666	1.0398	78.1100	0.0025	0.0068	78.11	Option 2: A=6.905, B=1211.033, C=220.79
Ethylbenzene						0.0776	0.0639	0.0938	106.1700	0.0025	0.0006	106.17	Option 2: A=6.975, B=1424.255, C=213.21
Gasoline (RVP 6)						2.4049	2.1448	2.6903	69.0000	0.0900	0.4941	92.00	Option 4: RVP=6, ASTM Slope=3
Toluene						0.2447	0.2058	0.2898	92.1300	0.0025	0.0019	92.13	Option 2: A=6.954, B=1344.8, C=219.48
Water						0.1811	0.1485	0.2198	18.0150	0.9000	0.4961	18.02	Option 2: A=8.07131, B=1730.63, C=233.426
Xylenes (mixed isomers)						0.0644	0.0530	0.0780	106.1700	0.0025	0.0005	106.17	Option 2: A=7.009, B=1462.266, C=215.11

TANKS 4.0.9d
Emissions Report - Detail Format
Detail Calculations (AP-42)

WT 1-2 - Horizontal Tank
, West Virginia

Month:	January	February	March	April	May	June	July	August	September	October	November	December
Standing Losses (lb):	2.4760	2.9069	4.8065	6.5442	8.5942	9.6489	9.7294	8.7982	6.8674	5.2977	3.2866	2.4060
Vapor Space Volume (cu ft):	1,626.4495	1,626.4495	1,626.4495	1,626.4495	1,626.4495	1,626.4495	1,626.4495	1,626.4495	1,626.4495	1,626.4495	1,626.4495	1,626.4495
Vapor Density (lb/cu ft):	0.0011	0.0012	0.0014	0.0016	0.0019	0.0021	0.0021	0.0021	0.0019	0.0016	0.0013	0.0012
Vapor Space Expansion Factor:	0.0459	0.0560	0.0719	0.0886	0.0999	0.1054	0.0998	0.0928	0.0823	0.0718	0.0531	0.0426
Vented Vapor Saturation Factor:	0.9546	0.9509	0.9406	0.9299	0.9187	0.9085	0.9051	0.9083	0.9185	0.9328	0.9437	0.9519
Tank Vapor Space Volume:												
Vapor Space Volume (cu ft):	1,626.4495	1,626.4495	1,626.4495	1,626.4495	1,626.4495	1,626.4495	1,626.4495	1,626.4495	1,626.4495	1,626.4495	1,626.4495	1,626.4495
Tank Diameter (ft):	8.5000	8.5000	8.5000	8.5000	8.5000	8.5000	8.5000	8.5000	8.5000	8.5000	8.5000	8.5000
Effective Diameter (ft):	22.0740	22.0740	22.0740	22.0740	22.0740	22.0740	22.0740	22.0740	22.0740	22.0740	22.0740	22.0740
Vapor Space Outage (ft):	4.2500	4.2500	4.2500	4.2500	4.2500	4.2500	4.2500	4.2500	4.2500	4.2500	4.2500	4.2500
Tank Shell Length (ft):	45.0000	45.0000	45.0000	45.0000	45.0000	45.0000	45.0000	45.0000	45.0000	45.0000	45.0000	45.0000
Vapor Density												
Vapor Density (lb/cu ft):	0.0011	0.0012	0.0014	0.0016	0.0019	0.0021	0.0021	0.0021	0.0019	0.0016	0.0013	0.0012
Vapor Molecular Weight (lb/lb-mole):	28.9541	28.6297	27.8856	27.2734	26.7465	26.3434	26.2220	26.3362	26.7387	27.4272	28.0954	28.7203
Vapor Pressure at Daily Average Liquid Surface Temperature (psia):	0.2111	0.2294	0.2805	0.3346	0.3929	0.4471	0.4654	0.4482	0.3938	0.3197	0.2647	0.2241
Daily Avg. Liquid Surface Temp. (deg. R):	508.5095	510.9624	516.9429	522.2886	527.2494	531.3037	532.5737	531.3788	527.3254	520.9055	515.2035	510.2689
Daily Average Ambient Temp. (deg. F):	32.1000	35.5000	45.8500	54.8000	63.5000	71.4500	75.0500	73.9000	67.6500	56.2000	46.8000	37.0000
Ideal Gas Constant R (psia cuft / (lb-mol-deg R)):	10.731	10.731	10.731	10.731	10.731	10.731	10.731	10.731	10.731	10.731	10.731	10.731
Liquid Bulk Temperature (deg. R):	516.8933	516.8933	516.8933	516.8933	516.8933	516.8933	516.8933	516.8933	516.8933	516.8933	516.8933	516.8933
Tank Paint Solar Absorptance (Shell):	0.5400	0.5400	0.5400	0.5400	0.5400	0.5400	0.5400	0.5400	0.5400	0.5400	0.5400	0.5400
Daily Total Solar Insulation Factor (Btu/sqft day):	625.9737	850.2836	1,184.6862	1,514.6470	1,780.2020	1,910.5999	1,836.9933	1,675.5029	1,369.9719	1,046.0392	678.9578	533.0136
Vapor Space Expansion Factor												
Vapor Space Expansion Factor:	0.0459	0.0560	0.0719	0.0886	0.0999	0.1054	0.0998	0.0928	0.0823	0.0718	0.0531	0.0426
Daily Vapor Temperature Range (deg. R):	22.5687	26.9683	33.5365	40.1815	44.1967	45.6643	43.1113	40.4536	36.7700	33.0961	25.3858	21.0192
Daily Vapor Pressure Range (psia):	0.0818	0.1056	0.1579	0.2223	0.2828	0.3281	0.3205	0.2903	0.2348	0.1751	0.1130	0.0804
Breather Vent Press. Setting Range(psia):	0.0600	0.0600	0.0600	0.0600	0.0600	0.0600	0.0600	0.0600	0.0600	0.0600	0.0600	0.0600
Vapor Pressure at Daily Average Liquid Surface Temperature (psia):	0.2111	0.2294	0.2805	0.3346	0.3929	0.4471	0.4654	0.4482	0.3938	0.3197	0.2647	0.2241
Vapor Pressure at Daily Minimum Liquid Surface Temperature (psia):	0.1737	0.1821	0.2114	0.2396	0.2737	0.3092	0.3292	0.3235	0.2918	0.2428	0.2136	0.1871
Vapor Pressure at Daily Maximum Liquid Surface Temperature (psia):	0.2555	0.2877	0.3693	0.4619	0.5565	0.6373	0.6497	0.6139	0.5266	0.4179	0.3266	0.2675
Daily Avg. Liquid Surface Temp. (deg R):	508.5095	510.9624	516.9429	522.2886	527.2494	531.3037	532.5737	531.3788	527.3254	520.9055	515.2035	510.2689
Daily Min. Liquid Surface Temp. (deg R):	502.8673	504.2203	508.5588	512.2432	516.2002	519.8876	521.7958	521.2654	518.1329	512.6314	508.8570	505.0141
Daily Max. Liquid Surface Temp. (deg R):	514.1517	517.7044	525.3271	532.3339	538.2986	542.7198	543.3515	541.4922	536.5179	529.1795	521.5500	515.5237
Daily Ambient Temp. Range (deg. R):	18.2000	19.6000	21.7000	24.0000	24.0000	23.3000	21.3000	21.0000	22.3000	24.0000	21.0000	18.0000
Vented Vapor Saturation Factor												
Vented Vapor Saturation Factor:	0.9546	0.9509	0.9406	0.9299	0.9187	0.9085	0.9051	0.9083	0.9185	0.9328	0.9437	0.9519
Vapor Pressure at Daily Average Liquid: Surface Temperature (psia):	0.2111	0.2294	0.2805	0.3346	0.3929	0.4471	0.4654	0.4482	0.3938	0.3197	0.2647	0.2241
Vapor Space Outage (ft):	4.2500	4.2500	4.2500	4.2500	4.2500	4.2500	4.2500	4.2500	4.2500	4.2500	4.2500	4.2500
Working Losses (lb):	315.9693	339.6579	404.4469	471.7859	543.3213	609.0001	631.0160	610.2819	544.4899	453.4412	384.5182	332.7997
Vapor Molecular Weight (lb/lb-mole):	28.9541	28.6297	27.8856	27.2734	26.7465	26.3434	26.2220	26.3362	26.7387	27.4272	28.0954	28.7203
Vapor Pressure at Daily Average Liquid Surface Temperature (psia):	0.2111	0.2294	0.2805	0.3346	0.3929	0.4471	0.4654	0.4482	0.3938	0.3197	0.2647	0.2241
Net Throughput (gal/mo.):	12,775,000.000012,775,000.000012,775,000.000012,775,000.000012,775,000.000012,775,000.000012,775,000.000012,775,000.000012,775,000.000012,775,000.000012,775,000.000012,775,000.0000											
Annual Turnovers:	9,017.6471	9,017.6471	9,017.6471	9,017.6471	9,017.6471	9,017.6471	9,017.6471	9,017.6471	9,017.6471	9,017.6471	9,017.6471	9,017.6471
Turnover Factor:	0.1700	0.1700	0.1700	0.1700	0.1700	0.1700	0.1700	0.1700	0.1700	0.1700	0.1700	0.1700

TANKS 4.0.9d
Emissions Report - Detail Format
Individual Tank Emission Totals

Emissions Report for: Annual

WT 1-2 - Horizontal Tank
, West Virginia

	Losses(lbs)		
Components	Working Loss	Breathing Loss	Total Emissions
100,000ppm VOC (10%) HEP Shalewater	5,640.73	71.36	5,712.09
Benzene	37.89	0.48	38.37
Ethylbenzene	3.61	0.05	3.66
Gasoline (RVP 6)	2,518.22	31.40	2,549.62
Toluene	10.84	0.14	10.97
Water	3,067.16	39.26	3,106.42
Xylenes (mixed isomers)	3.01	0.04	3.05

TANKS 4.0.9d
Emissions Report - Detail Format
Tank Indentification and Physical Characteristics

Identification

User Identification:	ST 1-5
City:	
State:	West Virginia
Company:	HEP Shalewater Solutions LLC.
Type of Tank:	Horizontal Tank
Description:	5 - 21,000gal Settling Tanks (closed-roof frac tanks)

Tank Dimensions

Shell Length (ft):	45.00
Diameter (ft):	8.50
Volume (gallons):	17,000.00
Turnovers:	9,017.65
Net Throughput(gal/yr):	153,300,000.00
Is Tank Heated (y/n):	N
Is Tank Underground (y/n):	N

Paint Characteristics

Shell Color/Shade:	Gray/Light
Shell Condition	Good

Breather Vent Settings

Vacuum Settings (psig):	-0.03
Pressure Settings (psig)	0.03

Meterological Data used in Emissions Calculations: Charleston, West Virginia (Avg Atmospheric Pressure = 14.25 psia)

TANKS 4.0.9d
Emissions Report - Detail Format
Liquid Contents of Storage Tank

ST 1-5 - Horizontal Tank
, West Virginia

Mixture/Component	Month	Daily Liquid Surf. Temperature (deg F) Avg.	Min.	Max.	Liquid Bulk Temp (deg F)	Vapor Pressure (psia) Avg.	Min.	Max.	Vapor Mol. Weight.	Liquid Mass Fract.	Vapor Mass Fract.	Mol. Weight	Basis for Vapor Pressure Calculations
100,000ppm VOC (10%) HEP Shalewater	Jan	48.84	43.20	54.48	57.22	0.2111	0.1737	0.2555	28.9541			19.59	
Benzene						0.8499	0.7189	1.0001	78.1100	0.0025	0.0068	78.11	Option 2: A=6.905, B=1211.033, C=220.79
Ethylbenzene						0.0728	0.0590	0.0893	106.1700	0.0025	0.0008	106.17	Option 2: A=6.975, B=1424.255, C=213.21
Gasoline (RVP 6)						2.3151	2.0453	2.6133	69.0000	0.0900	0.5010	92.00	Option 4: RVP=6, ASTM Slope=3
Toluene						0.2310	0.1914	0.2774	92.1300	0.0025	0.0019	92.13	Option 2: A=6.954, B=1344.8, C=219.48
Water						0.1696	0.1368	0.2090	18.0150	0.9000	0.4893	18.02	Option 2: A=8.07131, B=1730.63, C=233.426
Xylenes (mixed isomers)						0.0604	0.0488	0.0742	106.1700	0.0025	0.0005	106.17	Option 2: A=7.009, B=1462.266, C=215.11
100,000ppm VOC (10%) HEP Shalewater	Feb	51.29	44.55	58.03	57.22	0.2284	0.1821	0.2877	28.6287			19.59	
Benzene						0.9127	0.7487	1.1056	78.1100	0.0025	0.0068	78.11	Option 2: A=6.905, B=1211.033, C=220.79
Ethylbenzene						0.0796	0.0621	0.1013	106.1700	0.0025	0.0008	106.17	Option 2: A=6.975, B=1424.255, C=213.21
Gasoline (RVP 6)						2.4411	2.1076	2.8166	69.0000	0.0900	0.4914	92.00	Option 4: RVP=6, ASTM Slope=3
Toluene						0.2503	0.2004	0.3104	92.1300	0.0025	0.0019	92.13	Option 2: A=6.954, B=1344.8, C=219.48
Water						0.1858	0.1441	0.2378	18.0150	0.9000	0.4998	18.02	Option 2: A=8.07131, B=1730.63, C=233.426
Xylenes (mixed isomers)						0.0661	0.0514	0.0843	106.1700	0.0025	0.0005	106.17	Option 2: A=7.009, B=1462.266, C=215.11
100,000ppm VOC (10%) HEP Shalewater	Mar	57.27	48.89	65.66	57.22	0.2805	0.2114	0.3693	27.8856			19.59	
Benzene						1.0823	0.8511	1.3634	78.1100	0.0025	0.0068	78.11	Option 2: A=6.905, B=1211.033, C=220.79
Ethylbenzene						0.0985	0.0729	0.1318	106.1700	0.0025	0.0008	106.17	Option 2: A=6.975, B=1424.255, C=213.21
Gasoline (RVP 6)						2.7720	2.3176	3.2966	69.0000	0.0900	0.4686	92.00	Option 4: RVP=6, ASTM Slope=3
Toluene						0.3031	0.2314	0.3928	92.1300	0.0025	0.0019	92.13	Option 2: A=6.954, B=1344.8, C=219.48
Water						0.2314	0.1699	0.3115	18.0150	0.9000	0.5215	18.02	Option 2: A=8.07131, B=1730.63, C=233.426
Xylenes (mixed isomers)						0.0821	0.0605	0.1100	106.1700	0.0025	0.0005	106.17	Option 2: A=7.009, B=1462.266, C=215.11
100,000ppm VOC (10%) HEP Shalewater	Apr	62.62	52.57	72.66	57.22	0.3346	0.2396	0.4619	27.2734			19.59	
Benzene						1.2553	0.9470	1.6425	78.1100	0.0025	0.0067	78.11	Option 2: A=6.905, B=1211.033, C=220.79
Ethylbenzene						0.1188	0.0834	0.1665	106.1700	0.0025	0.0006	106.17	Option 2: A=6.975, B=1424.255, C=213.21
Gasoline (RVP 6)						3.0879	2.5091	3.7946	69.0000	0.0900	0.4490	92.00	Option 4: RVP=6, ASTM Slope=3
Toluene						0.3580	0.2609	0.4842	92.1300	0.0025	0.0019	92.13	Option 2: A=6.954, B=1344.8, C=219.48
Water						0.2801	0.1949	0.3962	18.0150	0.9000	0.5412	18.02	Option 2: A=8.07131, B=1730.63, C=233.426
Xylenes (mixed isomers)						0.0990	0.0693	0.1332	106.1700	0.0025	0.0005	106.17	Option 2: A=7.009, B=1462.266, C=215.11
100,000ppm VOC (10%) HEP Shalewater	May	67.58	56.53	78.63	57.22	0.3929	0.2737	0.5565	26.7465			19.59	
Benzene						1.4358	1.0599	1.9158	78.1100	0.0025	0.0067	78.11	Option 2: A=6.905, B=1211.033, C=220.79
Ethylbenzene						0.1406	0.0961	0.2018	106.1700	0.0025	0.0007	106.17	Option 2: A=6.975, B=1424.255, C=213.21
Gasoline (RVP 6)						3.4276	2.7290	4.2650	69.0000	0.0900	0.4314	92.00	Option 4: RVP=6, ASTM Slope=3
Toluene						0.4163	0.2961	0.5755	92.1300	0.0025	0.0019	92.13	Option 2: A=6.954, B=1344.8, C=219.48
Water						0.3330	0.2252	0.4833	18.0150	0.9000	0.5568	18.02	Option 2: A=8.07131, B=1730.63, C=233.426
Xylenes (mixed isomers)						0.1174	0.0799	0.1691	106.1700	0.0025	0.0005	106.17	Option 2: A=7.009, B=1462.266, C=215.11
100,000ppm VOC (10%) HEP Shalewater	Jun	71.63	60.22	83.05	57.22	0.4471	0.3092	0.6373	26.3434			19.59	
Benzene						1.5988	1.1749	2.1416	78.1100	0.0025	0.0066	78.11	Option 2: A=6.905, B=1211.033, C=220.79
Ethylbenzene						0.1609	0.1094	0.2321	106.1700	0.0025	0.0007	106.17	Option 2: A=6.975, B=1424.255, C=213.21
Gasoline (RVP 6)						3.7178	2.9479	4.6432	69.0000	0.0900	0.4174	92.00	Option 4: RVP=6, ASTM Slope=3
Toluene						0.4697	0.3324	0.6521	92.1300	0.0025	0.0020	92.13	Option 2: A=6.954, B=1344.8, C=219.48
Water						0.3826	0.2572	0.5583	18.0150	0.9000	0.5727	18.02	Option 2: A=8.07131, B=1730.63, C=233.426
Xylenes (mixed isomers)						0.1345	0.0911	0.1947	106.1700	0.0025	0.0006	106.17	Option 2: A=7.009, B=1462.266, C=215.11
100,000ppm VOC (10%) HEP Shalewater	Jul	72.90	62.13	83.68	57.22	0.4654	0.3282	0.6497	26.2220			19.59	
Benzene						1.6529	1.2384	2.1756	78.1100	0.0025	0.0066	78.11	Option 2: A=6.905, B=1211.033, C=220.79
Ethylbenzene						0.1678	0.1168	0.2367	106.1700	0.0025	0.0007	106.17	Option 2: A=6.975, B=1424.255, C=213.21
Gasoline (RVP 6)						3.8127	3.0666	4.6994	69.0000	0.0900	0.4131	92.00	Option 4: RVP=6, ASTM Slope=3
Toluene						0.4876	0.3526	0.6637	92.1300	0.0025	0.0020	92.13	Option 2: A=6.954, B=1344.8, C=219.48
Water						0.3994	0.2752	0.5698	18.0150	0.9000	0.5770	18.02	Option 2: A=8.07131, B=1730.63, C=233.426
Xylenes (mixed isomers)						0.1403	0.0974	0.1987	106.1700	0.0025	0.0006	106.17	Option 2: A=7.009, B=1462.266, C=215.11
100,000ppm VOC (10%) HEP Shalewater	Aug	71.71	61.80	81.62	57.22	0.4482	0.3235	0.6139	26.3362			19.59	
Benzene						1.6019	1.2205	2.0768	78.1100	0.0025	0.0066	78.11	Option 2: A=6.905, B=1211.033, C=220.79
Ethylbenzene						0.1613	0.1147	0.2233	106.1700	0.0025	0.0007	106.17	Option 2: A=6.975, B=1424.255, C=213.21
Gasoline (RVP 6)						3.7233	3.0332	4.5356	69.0000	0.0900	0.4172	92.00	Option 4: RVP=6, ASTM Slope=3
Toluene						0.4707	0.3469	0.6300	92.1300	0.0025	0.0020	92.13	Option 2: A=6.954, B=1344.8, C=219.48
Water						0.3836	0.2701	0.5365	18.0150	0.9000	0.5730	18.02	Option 2: A=8.07131, B=1730.63, C=233.426
Xylenes (mixed isomers)						0.1349	0.0956	0.1873	106.1700	0.0025	0.0006	106.17	Option 2: A=7.009, B=1462.266, C=215.11
100,000ppm VOC (10%) HEP Shalewater	Sep	67.66	58.46	76.85	57.22	0.3938	0.2918	0.5266	26.7387			19.59	
Benzene						1.4367	1.1190	1.8306	78.1100	0.0025	0.0067	78.11	Option 2: A=6.905, B=1211.033, C=220.79
Ethylbenzene						0.1410	0.1029	0.1907	106.1700	0.0025	0.0007	106.17	Option 2: A=6.975, B=1424.255, C=213.21
Gasoline (RVP 6)						3.4329	2.8420	4.1189	69.0000	0.0900	0.4311	92.00	Option 4: RVP=6, ASTM Slope=3
Toluene						0.4172	0.3147	0.5468	92.1300	0.0025	0.0019	92.13	Option 2: A=6.954, B=1344.8, C=219.48
Water						0.3339	0.2415	0.4557	18.0150	0.9000	0.5591	18.02	Option 2: A=8.07131, B=1730.63, C=233.426
Xylenes (mixed isomers)						0.1177	0.0856	0.1597	106.1700	0.0025	0.0005	106.17	Option 2: A=7.009, B=1462.266, C=215.11
100,000ppm VOC (10%) HEP Shalewater	Oct	61.24	52.96	69.51	57.22	0.3197	0.2428	0.4179	27.4272			19.59	
Benzene						1.2085	0.9576	1.5116	78.1100	0.0025	0.0067	78.11	Option 2: A=6.905, B=1211.033, C=220.79
Ethylbenzene						0.1133	0.0846	0.1500	106.1700	0.0025	0.0008	106.17	Option 2: A=6.975, B=1424.255, C=213.21
Gasoline (RVP 6)						3.0107	2.5300	3.5834	69.0000	0.0900	0.4540	92.00	Option 4: RVP=6, ASTM Slope=3
Toluene						0.3431	0.2642	0.4410	92.1300	0.0025	0.0019	92.13	Option 2: A=6.954, B=1344.8, C=219.48
Water						0.2667	0.1977	0.3559	18.0150	0.9000	0.5362	18.02	Option 2: A=8.07131, B=1730.63, C=233.426
Xylenes (mixed isomers)						0.0944	0.0703	0.1253	106.1700	0.0025	0.0005	106.17	Option 2: A=7.009, B=1462.266, C=215.11
100,000ppm VOC (10%) HEP Shalewater	Nov	55.53	49.19	61.88	57.22	0.2647	0.2136	0.3266	28.0954			19.59	
Benzene						1.0304	0.8585	1.2301	78.1100	0.0025	0.0068	78.11	Option 2: A=6.905, B=1211.033, C=220.79
Ethylbenzene						0.0927	0.0737	0.1158	106.1700	0.0025	0.0008	106.17	Option 2: A=6.975, B=1424.255, C=213.21
Gasoline (RVP 6)						2.6722	2.3325	3.0511	69.0000	0.0900	0.4752	92.00	Option 4: RVP=6, ASTM Slope=3
Toluene						0.2868	0.2337	0.3500	92.1300	0.0025	0.0019	92.13	Option 2: A=6.954, B=1344.8, C=219.48
Water						0.2172	0.1718	0.2728	18.0150	0.9000	0.5150	18.02	Option 2: A=8.07131, B=1730.63, C=233.426
Xylenes (mixed isomers)						0.0771	0.0612	0.0965	106.1700	0.0025	0.0005	106.17	Option 2: A=7.009, B=1462.266, C=215.11
100,000ppm VOC (10%) HEP Shalewater	Dec	50.60	45.34	55.85	57.22	0.2241	0.1871	0.2675	28.7203			19.59	
Benzene						0.8845	0.7636	1.0398	78.1100	0.0025	0.0068	78.11	Option 2: A=6.905, B=1211.033, C=220.79
Ethylbenzene						0.0773	0.0639	0.0938	106.1700	0.0025	0.0008	106.17	Option 2: A=6.975, B=1424.255, C=213.21
Gasoline (RVP 6)						2.4049	2.1448	2.6903	69.0000	0.0900	0.4941	92.00	Option 4: RVP=6, ASTM Slope=3
Toluene						0.2447	0.2058	0.2898	92.1300	0.0025	0.0019	92.13	Option 2: A=6.954, B=1344.8, C=219.48
Water						0.1811	0.1485	0.2196	18.0150	0.9000	0.4961	18.02	Option 2: A=8.07131, B=1730.63, C=233.426
Xylenes (mixed isomers)						0.0644	0.0530	0.0780	106.1700	0.0025	0.0005	106.17	Option 2: A=7.009, B=1462.266, C=215.11

TANKS 4.0.9d
Emissions Report - Detail Format
Detail Calculations (AP-42)

ST 1-5 - Horizontal Tank
, West Virginia

Month:	January	February	March	April	May	June	July	August	September	October	November	December
Standing Losses (lb):	2.4760	2.9069	4.8065	6.5442	8.5942	9.6489	9.7294	8.7982	6.8674	5.2977	3.2886	2.4060
Vapor Space Volume (cu ft):	1,626.4495	1,626.4495	1,626.4495	1,626.4495	1,626.4495	1,626.4495	1,626.4495	1,626.4495	1,626.4495	1,626.4495	1,626.4495	1,626.4495
Vapor Density (lb/cu ft):	0.0011	0.0012	0.0014	0.0016	0.0019	0.0021	0.0021	0.0021	0.0019	0.0016	0.0013	0.0012
Vapor Space Expansion Factor:	0.0459	0.0560	0.0719	0.0886	0.0999	0.1054	0.0998	0.0928	0.0823	0.0718	0.0531	0.0426
Vented Vapor Saturation Factor:	0.9546	0.9509	0.9405	0.9299	0.9187	0.9085	0.9051	0.9083	0.9185	0.9328	0.9437	0.9519
Tank Vapor Space Volume:												
Vapor Space Volume (cu ft):	1,626.4495	1,626.4495	1,626.4495	1,626.4495	1,626.4495	1,626.4495	1,626.4495	1,626.4495	1,626.4495	1,626.4495	1,626.4495	1,626.4495
Tank Diameter (ft):	8.5000	8.5000	8.5000	8.5000	8.5000	8.5000	8.5000	8.5000	8.5000	8.5000	8.5000	8.5000
Effective Diameter (ft):	22.0740	22.0740	22.0740	22.0740	22.0740	22.0740	22.0740	22.0740	22.0740	22.0740	22.0740	22.0740
Vapor Space Outage (ft):	4.2500	4.2500	4.2500	4.2500	4.2500	4.2500	4.2500	4.2500	4.2500	4.2500	4.2500	4.2500
Tank Shell Length (ft):	45.0000	45.0000	45.0000	45.0000	45.0000	45.0000	45.0000	45.0000	45.0000	45.0000	45.0000	45.0000
Vapor Density												
Vapor Density (lb/cu ft):	0.0011	0.0012	0.0014	0.0016	0.0019	0.0021	0.0021	0.0021	0.0019	0.0016	0.0013	0.0012
Vapor Molecular Weight (lb/lb-mole):	28.9541	28.6297	27.8856	27.2734	26.7465	26.3434	26.2220	26.3362	26.7387	27.4272	28.0954	28.7203
Vapor Pressure at Daily Average Liquid Surface Temperature (psia):	0.2111	0.2294	0.2805	0.3346	0.3929	0.4471	0.4654	0.4482	0.3938	0.3197	0.2647	0.2241
Daily Avg. Liquid Surface Temp. (deg. R):	508.5095	510.9624	516.9429	522.2886	527.2494	531.3037	532.5737	531.3788	527.3254	520.9055	515.2035	510.2689
Daily Average Ambient Temp. (deg. F):	32.1000	35.5000	45.8500	54.8000	63.5000	71.4500	75.0500	73.9000	67.6500	56.2000	46.8000	37.0000
Ideal Gas Constant R (psia cuft / (lb-mol-deg R)):	10.731	10.731	10.731	10.731	10.731	10.731	10.731	10.731	10.731	10.731	10.731	10.731
Liquid Bulk Temperature (deg. R):	516.8933	516.8933	516.8933	516.8933	516.8933	516.8933	516.8933	516.8933	516.8933	516.8933	516.8933	516.8933
Tank Paint Solar Absorptance (Shell):	0.5400	0.5400	0.5400	0.5400	0.5400	0.5400	0.5400	0.5400	0.5400	0.5400	0.5400	0.5400
Daily Total Solar Insulation Factor (Btu/sqft day):	625.9737	850.2836	1,184.6862	1,514.6470	1,780.2020	1,910.5899	1,836.8933	1,675.5029	1,360.9719	1,046.0382	678.9578	533.0135
Vapor Space Expansion Factor												
Vapor Space Expansion Factor:	0.0459	0.0560	0.0719	0.0886	0.0999	0.1054	0.0998	0.0928	0.0823	0.0718	0.0531	0.0426
Daily Vapor Temperature Range (deg. R):	22.5687	26.9683	33.5365	40.1815	44.1967	45.6643	43.1113	40.4536	36.7700	33.0981	25.3858	21.0192
Daily Vapor Pressure Range (psia):	0.0818	0.1056	0.1579	0.2223	0.2828	0.3281	0.3205	0.2903	0.2348	0.1751	0.1130	0.0804
Breather Vent Press. Setting Range(psia):	0.0600	0.0600	0.0600	0.0600	0.0600	0.0600	0.0600	0.0600	0.0600	0.0600	0.0600	0.0600
Vapor Pressure at Daily Average Liquid Surface Temperature (psia):	0.2111	0.2294	0.2805	0.3346	0.3929	0.4471	0.4654	0.4482	0.3938	0.3197	0.2647	0.2241
Vapor Pressure at Daily Minimum Liquid Surface Temperature (psia):	0.1737	0.1821	0.2114	0.2396	0.2737	0.3092	0.3292	0.3235	0.2918	0.2428	0.2136	0.1871
Vapor Pressure at Daily Maximum Liquid Surface Temperature (psia):	0.2555	0.2877	0.3693	0.4619	0.5585	0.6373	0.6497	0.6139	0.5266	0.4178	0.3268	0.2675
Daily Avg. Liquid Surface Temp. (deg R):	508.5095	510.9624	516.9429	522.2886	527.2494	531.3037	532.5737	531.3788	527.3254	520.9055	515.2035	510.2689
Daily Min. Liquid Surface Temp. (deg R):	502.8573	504.2203	508.5588	512.2432	516.2002	519.8876	521.7858	521.2654	518.1329	512.8314	508.8570	505.0141
Daily Max. Liquid Surface Temp. (deg R):	514.1517	517.7044	525.3271	532.3339	538.2986	542.7198	543.3515	541.4922	536.5179	528.1795	521.5500	515.5237
Daily Ambient Temp. Range (deg. R):	18.2000	19.6000	21.7000	24.0000	24.0000	23.3000	21.3000	21.0000	22.3000	24.0000	21.0000	18.0000
Vented Vapor Saturation Factor												
Vented Vapor Saturation Factor:	0.9546	0.9509	0.9406	0.9299	0.9187	0.9085	0.9051	0.9083	0.9185	0.9328	0.9437	0.9519
Vapor Pressure at Daily Average Liquid:												
Surface Temperature (psia):	0.2111	0.2294	0.2805	0.3346	0.3929	0.4471	0.4654	0.4482	0.3938	0.3197	0.2647	0.2241
Vapor Space Outage (ft):	4.2500	4.2500	4.2500	4.2500	4.2500	4.2500	4.2500	4.2500	4.2500	4.2500	4.2500	4.2500
Working Losses (lb):	315.9693	339.6579	404.4469	471.7859	543.3213	609.0001	631.0160	610.2819	544.4899	453.4412	384.5182	332.7997
Vapor Molecular Weight (lb/lb-mole):	28.9541	28.6297	27.8856	27.2734	26.7465	26.3434	26.2220	26.3362	26.7387	27.4272	28.0954	28.7203
Vapor Pressure at Daily Average Liquid Surface Temperature (psia):	0.2111	0.2294	0.2805	0.3346	0.3929	0.4471	0.4654	0.4482	0.3938	0.3197	0.2647	0.2241
Net Throughput (gal/mo.):	12,775,000.000012,775,000.000012,775,000.000012,775,000.000012,775,000.000012,775,000.000012,775,000.000012,775,000.000012,775,000.000012,775,000.000012,775,000.000012,775,000.0000											
Annual Turnovers:	9,017.6471	9,017.6471	9,017.6471	9,017.6471	9,017.6471	9,017.6471	9,017.6471	9,017.6471	9,017.6471	9,017.6471	9,017.6471	9,017.6471
Turnover Factor:	0.1700	0.1700	0.1700	0.1700	0.1700	0.1700	0.1700	0.1700	0.1700	0.1700	0.1700	0.1700
Tank Diameter (ft):	8.5000	8.5000	8.5000	8.5000	8.5000	8.5000	8.5000	8.5000	8.5000	8.5000	8.5000	8.5000
Working Loss Product Factor:	1.0000	1.0000	1.0000	1.0000	1.0000	1.0000	1.0000	1.0000	1.0000	1.0000	1.0000	1.0000
Total Losses (lb):	318.4453	342.5648	408.2534	478.3301	551.9156	618.6490	640.7454	619.0801	551.3573	458.7389	387.8048	335.2057

TANKS 4.0.9d
Emissions Report - Detail Format
Individual Tank Emission Totals

Emissions Report for: Annual

ST 1-5 - Horizontal Tank
, West Virginia

	Losses(lbs)		
Components	Working Loss	Breathing Loss	Total Emissions
100,000ppm VOC (10%) HEP Shalewater	5,640.73	71.36	5,712.09
Benzene	37.89	0.48	38.37
Ethylbenzene	3.61	0.05	3.66
Gasoline (RVP 6)	2,518.22	31.40	2,549.62
Toluene	10.84	0.14	10.97
Water	3,067.16	39.26	3,106.42
Xylenes (mixed isomers)	3.01	0.04	3.05

TANKS 4.0.9d
Emissions Report - Detail Format
Tank Indentification and Physical Characteristics

Identification

User Identification:	ET 1-12
City:	
State:	West Virginia
Company:	HEP Shalewater Solutions LLC.
Type of Tank:	Horizontal Tank
Description:	12 - 21,000gal Effluent Tanks (closed-roof frac tanks)

Tank Dimensions

Shell Length (ft):	45.00
Diameter (ft):	8.50
Volume (gallons):	17,000.00
Turnovers:	751.47
Net Throughput(gal/yr):	12,775,000.00
Is Tank Heated (y/n):	N
Is Tank Underground (y/n):	N

Paint Characteristics

Shell Color/Shade:	Gray/Light
Shell Condition	Good

Breather Vent Settings

Vacuum Settings (psig):	-0.03
Pressure Settings (psig)	0.03

Meterological Data used in Emissions Calculations: Charleston, West Virginia (Avg Atmospheric Pressure = 14.25 psia)

TANKS 4.0.9d
Emissions Report - Detail Format
Liquid Contents of Storage Tank

ET 1-12 - Horizontal Tank
, West Virginia

Mixture/Component	Month	Daily Liquid Surf. Temperature (deg F) Avg.	Min.	Max.	Liquid Bulk Temp (deg F)	Vapor Pressure (psia) Avg.	Min.	Max.	Vapor Mol. Weight.	Liquid Mass Fract.	Vapor Mass Fract.	Mol. Weight	Basis for Vapor Pressure Calculations
100,000ppm VOC (10%) HEP Shalewater	Jan	48.84	43.20	54.48	57.22	0.2111	0.1737	0.2555	28.9541			19.59	
Benzene						0.6499	0.7189	1.0001	78.1100	0.0025	0.0068	78.11	Option 2: A=6.905, B=1211.033, C=220.79
Ethylbenzene						0.0728	0.0580	0.0893	106.1700	0.0025	0.0006	106.17	Option 2: A=6.975, B=1424.255, C=213.21
Gasoline (RVP 6)						2.3151	2.0453	2.6133	69.0000	0.0900	0.5010	92.00	Option 4: RVP=6, ASTM Slope=3
Toluene						0.2310	0.1914	0.2774	92.1300	0.0025	0.0019	92.13	Option 2: A=6.954, B=1344.8, C=219.48
Water						0.1696	0.1368	0.2090	18.0150	0.9000	0.4893	18.02	Option 2: A=8.07131, B=1730.63, C=233.426
Xylenes (mixed isomers)						0.0604	0.0488	0.0742	106.1700	0.0025	0.0005	106.17	Option 2: A=7.009, B=1462.266, C=215.11
100,000ppm VOC (10%) HEP Shalewater	Feb	51.29	44.55	58.03	57.22	0.2284	0.1821	0.2877	28.6287			19.59	
Benzene						0.9127	0.7487	1.1056	78.1100	0.0025	0.0069	78.11	Option 2: A=6.905, B=1211.033, C=220.79
Ethylbenzene						0.0796	0.0621	0.1013	106.1700	0.0025	0.0006	106.17	Option 2: A=6.975, B=1424.255, C=213.21
Gasoline (RVP 6)						2.4411	2.1076	2.8166	69.0000	0.0900	0.4914	92.00	Option 4: RVP=6, ASTM Slope=3
Toluene						0.2503	0.2004	0.3104	92.1300	0.0025	0.0019	92.13	Option 2: A=6.954, B=1344.8, C=219.48
Water						0.1858	0.1441	0.2378	18.0150	0.9000	0.4988	18.02	Option 2: A=8.07131, B=1730.63, C=233.426
Xylenes (mixed isomers)						0.0661	0.0514	0.0843	106.1700	0.0025	0.0005	106.17	Option 2: A=7.009, B=1462.266, C=215.11
100,000ppm VOC (10%) HEP Shalewater	Mar	57.27	48.89	65.66	57.22	0.2805	0.2114	0.3693	27.8856			19.59	
Benzene						1.0823	0.8511	1.3634	78.1100	0.0025	0.0068	78.11	Option 2: A=6.905, B=1211.033, C=220.79
Ethylbenzene						0.0986	0.0729	0.1318	106.1700	0.0025	0.0006	106.17	Option 2: A=6.975, B=1424.255, C=213.21
Gasoline (RVP 6)						2.7720	2.3176	3.2966	69.0000	0.0900	0.4686	92.00	Option 4: RVP=6, ASTM Slope=3
Toluene						0.3031	0.2314	0.3928	92.1300	0.0025	0.0019	92.13	Option 2: A=6.954, B=1344.8, C=219.48
Water						0.2314	0.1699	0.3115	18.0150	0.9000	0.5215	18.02	Option 2: A=8.07131, B=1730.63, C=233.426
Xylenes (mixed isomers)						0.0821	0.0605	0.1100	106.1700	0.0025	0.0005	106.17	Option 2: A=7.009, B=1462.266, C=215.11
100,000ppm VOC (10%) HEP Shalewater	Apr	62.62	52.57	72.66	57.22	0.3346	0.2386	0.4619	27.2734			19.59	
Benzene						1.2553	0.8470	1.6425	78.1100	0.0025	0.0067	78.11	Option 2: A=6.905, B=1211.033, C=220.79
Ethylbenzene						0.1188	0.0834	0.1665	106.1700	0.0025	0.0006	106.17	Option 2: A=6.975, B=1424.255, C=213.21
Gasoline (RVP 6)						3.0979	2.5091	3.7946	69.0000	0.0900	0.4490	92.00	Option 4: RVP=6, ASTM Slope=3
Toluene						0.3580	0.2609	0.4842	92.1300	0.0025	0.0019	92.13	Option 2: A=6.954, B=1344.8, C=219.48
Water						0.2801	0.1949	0.3962	18.0150	0.9000	0.5412	18.02	Option 2: A=8.07131, B=1730.63, C=233.426
Xylenes (mixed isomers)						0.0990	0.0693	0.1392	106.1700	0.0025	0.0005	106.17	Option 2: A=7.009, B=1462.266, C=215.11
100,000ppm VOC (10%) HEP Shalewater	May	67.58	56.53	78.63	57.22	0.3929	0.2737	0.5585	28.7465			19.59	
Benzene						1.4358	1.0589	1.9158	78.1100	0.0025	0.0067	78.11	Option 2: A=6.905, B=1211.033, C=220.79
Ethylbenzene						0.1406	0.0961	0.2018	106.1700	0.0025	0.0007	106.17	Option 2: A=6.975, B=1424.255, C=213.21
Gasoline (RVP 6)						3.4276	2.7290	4.2650	69.0000	0.0900	0.4314	92.00	Option 4: RVP=6, ASTM Slope=3
Toluene						0.4163	0.2961	0.5755	92.1300	0.0025	0.0019	92.13	Option 2: A=6.954, B=1344.8, C=219.48
Water						0.3330	0.2252	0.4833	18.0150	0.9000	0.5588	18.02	Option 2: A=8.07131, B=1730.63, C=233.426
Xylenes (mixed isomers)						0.1174	0.0799	0.1691	106.1700	0.0025	0.0005	106.17	Option 2: A=7.009, B=1462.266, C=215.11
100,000ppm VOC (10%) HEP Shalewater	Jun	71.63	60.22	83.05	57.22	0.4471	0.3082	0.6373	26.3434			19.59	
Benzene						1.5988	1.1749	2.1416	78.1100	0.0025	0.0066	78.11	Option 2: A=6.905, B=1211.033, C=220.79
Ethylbenzene						0.1609	0.1094	0.2321	106.1700	0.0025	0.0007	106.17	Option 2: A=6.975, B=1424.255, C=213.21
Gasoline (RVP 6)						3.7178	2.8479	4.6432	69.0000	0.0900	0.4174	92.00	Option 4: RVP=6, ASTM Slope=3
Toluene						0.4697	0.3324	0.6521	92.1300	0.0025	0.0020	92.13	Option 2: A=6.954, B=1344.8, C=219.48
Water						0.3826	0.2572	0.5583	18.0150	0.9000	0.5727	18.02	Option 2: A=8.07131, B=1730.63, C=233.426
Xylenes (mixed isomers)						0.1345	0.0911	0.1947	106.1700	0.0025	0.0006	106.17	Option 2: A=7.009, B=1462.266, C=215.11
100,000ppm VOC (10%) HEP Shalewater	Jul	72.90	62.13	83.68	57.22	0.4654	0.3282	0.6497	25.2220			19.59	
Benzene						1.6529	1.2384	2.1756	78.1100	0.0025	0.0066	78.11	Option 2: A=6.905, B=1211.033, C=220.79
Ethylbenzene						0.1678	0.1168	0.2367	106.1700	0.0025	0.0007	106.17	Option 2: A=6.975, B=1424.255, C=213.21
Gasoline (RVP 6)						3.8127	3.0656	4.6994	69.0000	0.0900	0.4131	92.00	Option 4: RVP=6, ASTM Slope=3
Toluene						0.4876	0.3526	0.6637	92.1300	0.0025	0.0020	92.13	Option 2: A=6.954, B=1344.8, C=219.48
Water						0.3994	0.2752	0.5688	18.0150	0.9000	0.5770	18.02	Option 2: A=8.07131, B=1730.63, C=233.426
Xylenes (mixed isomers)						0.1403	0.0974	0.1987	106.1700	0.0025	0.0006	106.17	Option 2: A=7.009, B=1462.266, C=215.11
100,000ppm VOC (10%) HEP Shalewater	Aug	71.71	61.60	81.82	57.22	0.4482	0.3235	0.6138	26.3362			19.59	
Benzene						1.6019	1.2205	2.0768	78.1100	0.0025	0.0066	78.11	Option 2: A=6.905, B=1211.033, C=220.79
Ethylbenzene						0.1613	0.1147	0.2233	106.1700	0.0025	0.0007	106.17	Option 2: A=6.975, B=1424.255, C=213.21
Gasoline (RVP 6)						3.7233	3.0332	4.5356	69.0000	0.0900	0.4172	92.00	Option 4: RVP=6, ASTM Slope=3
Toluene						0.4707	0.3469	0.6300	92.1300	0.0025	0.0020	92.13	Option 2: A=6.954, B=1344.8, C=219.48
Water						0.3836	0.2701	0.5365	18.0150	0.9000	0.5730	18.02	Option 2: A=8.07131, B=1730.63, C=233.426
Xylenes (mixed isomers)						0.1349	0.0956	0.1873	106.1700	0.0025	0.0006	106.17	Option 2: A=7.009, B=1462.266, C=215.11
100,000ppm VOC (10%) HEP Shalewater	Sep	67.66	58.46	76.85	57.22	0.3938	0.2918	0.5286	28.7387			19.59	
Benzene						1.4387	1.1190	1.8306	78.1100	0.0025	0.0067	78.11	Option 2: A=6.905, B=1211.033, C=220.79
Ethylbenzene						0.1410	0.1029	0.1907	106.1700	0.0025	0.0007	106.17	Option 2: A=6.975, B=1424.255, C=213.21
Gasoline (RVP 6)						3.4329	2.8420	4.1199	69.0000	0.0900	0.4311	92.00	Option 4: RVP=6, ASTM Slope=3
Toluene						0.4172	0.3147	0.5468	92.1300	0.0025	0.0019	92.13	Option 2: A=6.954, B=1344.8, C=219.48
Water						0.3339	0.2415	0.4557	18.0150	0.9000	0.5591	18.02	Option 2: A=8.07131, B=1730.63, C=233.426
Xylenes (mixed isomers)						0.1177	0.0856	0.1597	106.1700	0.0025	0.0005	106.17	Option 2: A=7.009, B=1462.266, C=215.11
100,000ppm VOC (10%) HEP Shalewater	Oct	61.24	52.96	69.51	57.22	0.3197	0.2428	0.4179	27.4272			19.59	
Benzene						1.2085	0.9576	1.5116	78.1100	0.0025	0.0067	78.11	Option 2: A=6.905, B=1211.033, C=220.79
Ethylbenzene						0.1133	0.0846	0.1500	106.1700	0.0025	0.0006	106.17	Option 2: A=6.975, B=1424.255, C=213.21
Gasoline (RVP 6)						3.0107	2.5300	3.5634	69.0000	0.0900	0.4540	92.00	Option 4: RVP=6, ASTM Slope=3
Toluene						0.3431	0.2642	0.4410	92.1300	0.0025	0.0019	92.13	Option 2: A=6.954, B=1344.8, C=219.48
Water						0.2667	0.1977	0.3553	18.0150	0.9000	0.5362	18.02	Option 2: A=8.07131, B=1730.63, C=233.426
Xylenes (mixed isomers)						0.0944	0.0703	0.1253	106.1700	0.0025	0.0005	106.17	Option 2: A=7.009, B=1462.266, C=215.11
100,000ppm VOC (10%) HEP Shalewater	Nov	55.53	46.13	64.88	57.22	0.2647	0.2136	0.3266	28.0954			19.59	
Benzene						1.0304	0.8585	1.2301	78.1100	0.0025	0.0068	78.11	Option 2: A=6.905, B=1211.033, C=220.79
Ethylbenzene						0.0927	0.0737	0.1158	106.1700	0.0025	0.0006	106.17	Option 2: A=6.975, B=1424.255, C=213.21
Gasoline (RVP 6)						2.6722	2.3328	3.0511	69.0000	0.0900	0.4752	92.00	Option 4: RVP=6, ASTM Slope=3
Toluene						0.2868	0.2337	0.3500	92.1300	0.0025	0.0019	92.13	Option 2: A=6.954, B=1344.8, C=219.48
Water						0.2172	0.1718	0.2728	18.0150	0.9000	0.5150	18.02	Option 2: A=8.07131, B=1730.63, C=233.426
Xylenes (mixed isomers)						0.0771	0.0612	0.0965	106.1700	0.0025	0.0005	106.17	Option 2: A=7.009, B=1462.266, C=215.11
100,000ppm VOC (10%) HEP Shalewater	Dec	50.60	45.34	55.85	57.22	0.2241	0.1871	0.2675	28.7203			19.59	
Benzene						0.8845	0.7665	1.0398	78.1100	0.0025	0.0068	78.11	Option 2: A=6.905, B=1211.033, C=220.79
Ethylbenzene						0.0776	0.0639	0.0938	106.1700	0.0025	0.0006	106.17	Option 2: A=6.975, B=1424.255, C=213.21
Gasoline (RVP 6)						2.4049	2.1448	2.8903	69.0000	0.0900	0.4941	92.00	Option 4: RVP=6, ASTM Slope=3
Toluene						0.2447	0.2058	0.2898	92.1300	0.0025	0.0019	92.13	Option 2: A=6.954, B=1344.8, C=219.48
Water						0.1811	0.1485	0.2198	18.0150	0.9000	0.4961	18.02	Option 2: A=8.07131, B=1730.63, C=233.426
Xylenes (mixed isomers)						0.0644	0.0530	0.0780	106.1700	0.0025	0.0005	106.17	Option 2: A=7.009, B=1462.266, C=215.11

TANKS 4.0.9d
Emissions Report - Detail Format
Detail Calculations (AP-42)

ET 1-12 - Horizontal Tank
, West Virginia

Month:	January	February	March	April	May	June	July	August	September	October	November	December
Standing Losses (lb):	2.4760	2.9089	4.8085	6.5442	8.5942	9.6489	9.7294	8.7982	6.8674	5.2977	3.2868	2.4060
Vapor Space Volume (cu ft):	1,626.4495	1,626.4495	1,626.4495	1,626.4495	1,626.4495	1,626.4495	1,626.4495	1,626.4495	1,626.4495	1,626.4495	1,626.4495	1,626.4495
Vapor Density (lb/cu ft):	0.0011	0.0012	0.0014	0.0016	0.0019	0.0021	0.0021	0.0021	0.0019	0.0016	0.0013	0.0012
Vapor Space Expansion Factor:	0.0459	0.0560	0.0719	0.0886	0.0999	0.1054	0.0998	0.0928	0.0823	0.0718	0.0531	0.0426
Vented Vapor Saturation Factor:	0.9546	0.9509	0.9406	0.9299	0.9187	0.9085	0.9051	0.9083	0.9185	0.9328	0.9437	0.9519
Tank Vapor Space Volume:												
Vapor Space Volume (cu ft):	1,626.4495	1,626.4495	1,626.4495	1,626.4495	1,626.4495	1,626.4495	1,626.4495	1,626.4495	1,626.4495	1,626.4495	1,626.4495	1,626.4495
Tank Diameter (ft):	8.5000	8.5000	8.5000	8.5000	8.5000	8.5000	8.5000	8.5000	8.5000	8.5000	8.5000	8.5000
Effective Diameter (ft):	22.0740	22.0740	22.0740	22.0740	22.0740	22.0740	22.0740	22.0740	22.0740	22.0740	22.0740	22.0740
Vapor Space Outage (ft):	4.2500	4.2500	4.2500	4.2500	4.2500	4.2500	4.2500	4.2500	4.2500	4.2500	4.2500	4.2500
Tank Shell Length (ft):	45.0000	45.0000	45.0000	45.0000	45.0000	45.0000	45.0000	45.0000	45.0000	45.0000	45.0000	45.0000
Vapor Density												
Vapor Density (lb/cu ft):	0.0011	0.0012	0.0014	0.0016	0.0019	0.0021	0.0021	0.0021	0.0019	0.0016	0.0013	0.0012
Vapor Molecular Weight (lb/lb-mole):	28.9541	28.6297	27.8856	27.2734	26.7465	26.3434	26.2220	26.3362	26.7387	27.4272	28.0954	28.7203
Vapor Pressure at Daily Average Liquid Surface Temperature (psia):	0.2111	0.2294	0.2805	0.3346	0.3929	0.4471	0.4654	0.4482	0.3938	0.3197	0.2647	0.2241
Daily Avg. Liquid Surface Temp. (deg. R):	508.5095	510.9624	516.9429	522.2886	527.2494	531.3037	532.5737	531.3788	527.3254	520.9055	515.2035	510.2689
Daily Average Ambient Temp. (deg. F):	32.1000	35.5000	45.8500	54.8000	63.5000	71.4500	75.0500	73.9000	67.8500	56.2000	46.8000	37.0000
Ideal Gas Constant R (psia cuft / (lb-mol-deg R)):	10.731	10.731	10.731	10.731	10.731	10.731	10.731	10.731	10.731	10.731	10.731	10.731
Liquid Bulk Temperature (deg. R):	516.8933	518.8933	516.8933	516.8933	516.8933	516.8933	516.8933	516.8933	516.8933	516.8933	516.8933	516.8933
Tank Paint Solar Absorptance (Shell):	0.5400	0.5400	0.5400	0.5400	0.5400	0.5400	0.5400	0.5400	0.5400	0.5400	0.5400	0.5400
Daily Total Solar Insulation Factor (Btu/sqft day):	625.9737	850.2836	1,184.6862	1,514.6470	1,780.2020	1,910.5810	1,836.9933	1,675.5029	1,368.9718	1,046.0382	678.9578	533.0135
Vapor Space Expansion Factor												
Vapor Space Expansion Factor:	0.0459	0.0560	0.0719	0.0886	0.0999	0.1054	0.0998	0.0928	0.0823	0.0718	0.0531	0.0426
Daily Vapor Temperature Range (deg. R):	22.5687	26.9883	33.5365	40.1815	44.1987	45.6643	43.1113	40.4533	36.7700	33.0981	25.3858	21.0192
Daily Vapor Pressure Range (psia):	0.0818	0.1056	0.1579	0.2223	0.2828	0.3281	0.3205	0.2903	0.2348	0.1751	0.1130	0.0804
Breather Vent Press. Setting Range(psia):	0.0600	0.0600	0.0600	0.0600	0.0600	0.0600	0.0600	0.0600	0.0600	0.0600	0.0600	0.0600
Vapor Pressure at Daily Average Liquid Surface Temperature (psia):	0.2111	0.2294	0.2805	0.3346	0.3929	0.4471	0.4654	0.4482	0.3938	0.3197	0.2647	0.2241
Vapor Pressure at Daily Minimum Liquid Surface Temperature (psia):	0.1737	0.1821	0.2114	0.2398	0.2737	0.3092	0.3292	0.3235	0.2918	0.2428	0.2136	0.1871
Vapor Pressure at Daily Maximum Liquid Surface Temperature (psia):	0.2555	0.2877	0.3553	0.4619	0.5565	0.6373	0.6497	0.6139	0.5266	0.4179	0.3266	0.2675
Daily Avg. Liquid Surface Temp. (deg R):	508.5095	510.9624	516.9429	522.2886	527.2494	531.3037	532.5737	531.3788	527.3254	520.9055	515.2035	510.2689
Daily Min. Liquid Surface Temp. (deg R):	502.8673	504.2203	508.5588	512.2432	516.2002	519.8876	521.7958	521.2654	518.1328	512.8314	508.8570	505.0141
Daily Max. Liquid Surface Temp. (deg R):	514.1517	517.7044	525.3271	532.3339	538.2886	542.7198	543.3515	541.4922	536.5179	528.1795	521.5500	515.5237
Daily Ambient Temp. Range (deg. R):	18.2000	18.6000	21.7000	24.0000	24.0000	23.3000	21.3000	21.0000	22.3000	24.0000	21.0000	18.0000
Vented Vapor Saturation Factor												
Vented Vapor Saturation Factor:	0.9546	0.9509	0.9406	0.9299	0.9187	0.9085	0.9051	0.9083	0.9185	0.9328	0.9437	0.9519
Vapor Pressure at Daily Average Liquid:												
Surface Temperature (psia):	0.2111	0.2294	0.2805	0.3346	0.3929	0.4471	0.4654	0.4482	0.3938	0.3197	0.2647	0.2241
Vapor Space Outage (ft):	4.2500	4.2500	4.2500	4.2500	4.2500	4.2500	4.2500	4.2500	4.2500	4.2500	4.2500	4.2500
Working Losses (lb):	31.9991	34.3981	40.9594	47.7790	55.0236	61.6751	63.9047	61.8049	55.1420	45.9212	38.9412	33.7035
Vapor Molecular Weight (lb/lb-mole):	28.9541	28.6297	27.8856	27.2734	26.7465	26.3434	26.2220	26.3362	26.7387	27.4272	28.0954	28.7203
Vapor Pressure at Daily Average Liquid Surface Temperature (psia):	0.2111	0.2294	0.2805	0.3346	0.3929	0.4471	0.4654	0.4482	0.3938	0.3197	0.2647	0.2241
Net Throughput (gal/mo.):	1,064,583.3330	1,064,583.3330	1,064,583.3330	1,064,583.3330	1,064,583.3330	1,064,583.3330	1,064,583.3330	1,064,583.3330	1,064,583.3330	1,064,583.3330	1,064,583.3330	1,064,583.3330
Annual Turnovers:	751.4706	751.4706	751.4706	751.4706	751.4706	751.4706	751.4706	751.4706	751.4706	751.4706	751.4706	751.4706
Turnover Factor:	0.2066	0.2066	0.2066	0.2066	0.2066	0.2066	0.2066	0.2066	0.2066	0.2066	0.2066	0.2066
Tank Diameter (ft):	8.5000	8.5000	8.5000	8.5000	8.5000	8.5000	8.5000	8.5000	8.5000	8.5000	8.5000	8.5000
Working Loss Product Factor:	1.0000	1.0000	1.0000	1.0000	1.0000	1.0000	1.0000	1.0000	1.0000	1.0000	1.0000	1.0000
Total Losses (lb):	34.4750	37.3069	45.7659	54.3232	63.6178	71.3240	73.6341	70.6031	62.0093	51.2190	42.2278	36.1095

TANKS 4.0.9d
Emissions Report - Detail Format
Individual Tank Emission Totals

Emissions Report for: Annual

ET 1-12 - Horizontal Tank
, West Virginia

	Losses(lbs)		
Components	Working Loss	Breathing Loss	Total Emissions
100,000ppm VOC (10%) HEP Shalewater	571.25	71.36	642.61
Benzene	3.84	0.48	4.32
Ethylbenzene	0.37	0.05	0.41
Gasoline (RVP 6)	255.03	31.40	286.43
Toluene	1.10	0.14	1.23
Water	310.62	39.26	349.88
Xylenes (mixed isomers)	0.30	0.04	0.34

TANKS 4.0.9d
Emissions Report - Detail Format
Tank Indentification and Physical Characteristics

Identification

User Identification:	SI 1-2
City:	
State:	West Virginia
Company:	HEP Shalewater Solutions LLC.
Type of Tank:	Horizontal Tank
Description:	2 - 21,000gal Influent Storage Tanks (closed-roof frac tanks)

Tank Dimensions

Shell Length (ft):	45.00
Diameter (ft):	8.50
Volume (gallons):	17,000.00
Turnovers:	886.43
Net Throughput(gal/yr):	15,069,390.00
Is Tank Heated (y/n):	N
Is Tank Underground (y/n):	N

Paint Characteristics

Shell Color/Shade:	Gray/Light
Shell Condition	Good

Breather Vent Settings

Vacuum Settings (psig):	-0.03
Pressure Settings (psig)	0.03

Meterological Data used in Emissions Calculations: Charleston, West Virginia (Avg Atmospheric Pressure = 14.25 psia)

TANKS 4.0.9d
Emissions Report - Detail Format
Liquid Contents of Storage Tank

SI 1-2 - Horizontal Tank
, West Virginia

Mixture/Component	Month	Daily Liquid Surf. Temperature (deg F) Avg.	Min.	Max.	Liquid Bulk Temp (deg F)	Vapor Pressure (psia) Avg.	Min.	Max.	Vapor Mol. Weight	Liquid Mass Fract.	Vapor Mass Fract.	Mol. Weight	Basis for Vapor Pressure Calculations
100,000ppm VOC (10%) HEP Shalewater	Jan	48.84	43.20	54.48	57.22	0.2111	0.1737	0.2555	28.9541			19.59	
Benzene						0.6499	0.7189	1.0001	78.1100	0.0025	0.0068	78.11	Option 2: A=6.905, B=1211.033, C=220.79
Ethylbenzene						0.0728	0.0590	0.0893	106.1700	0.0025	0.0006	106.17	Option 2: A=6.975, B=1424.255, C=213.21
Gasoline (RVP 6)						2.3151	2.0453	2.6133	69.0000	0.0900	0.5010	92.00	Option 4: RVP=6, ASTM Slope=3
Toluene						0.2310	0.1914	0.2774	92.1300	0.0025	0.0019	92.13	Option 2: A=6.954, B=1344.8, C=219.48
Water						0.1696	0.1368	0.2090	18.0150	0.9000	0.4893	18.02	Option 2: A=8.07131, B=1730.63, C=233.426
Xylenes (mixed isomers)						0.0604	0.0486	0.0742	106.1700	0.0025	0.0005	106.17	Option 2: A=7.009, B=1462.266, C=215.11
100,000ppm VOC (10%) HEP Shalewater	Feb	51.29	44.55	58.03	57.22	0.2294	0.1821	0.2877	28.8297			19.59	
Benzene						0.9127	0.7487	1.1056	78.1100	0.0025	0.0068	78.11	Option 2: A=6.905, B=1211.033, C=220.79
Ethylbenzene						0.0796	0.0621	0.1013	106.1700	0.0025	0.0006	106.17	Option 2: A=6.975, B=1424.255, C=213.21
Gasoline (RVP 6)						2.4411	2.1076	2.8166	69.0000	0.0900	0.4914	92.00	Option 4: RVP=6, ASTM Slope=3
Toluene						0.2503	0.2004	0.3104	92.1300	0.0025	0.0019	92.13	Option 2: A=6.954, B=1344.8, C=219.48
Water						0.1858	0.1441	0.2378	18.0150	0.9000	0.4888	18.02	Option 2: A=8.07131, B=1730.63, C=233.426
Xylenes (mixed isomers)						0.0661	0.0514	0.0843	106.1700	0.0025	0.0005	106.17	Option 2: A=7.009, B=1462.266, C=215.11
100,000ppm VOC (10%) HEP Shalewater	Mar	57.27	48.89	65.66	57.22	0.2805	0.2114	0.3693	27.8856			19.59	
Benzene						1.0823	0.8511	1.3634	78.1100	0.0025	0.0068	78.11	Option 2: A=6.905, B=1211.033, C=220.79
Ethylbenzene						0.0986	0.0729	0.1318	106.1700	0.0025	0.0006	106.17	Option 2: A=6.975, B=1424.255, C=213.21
Gasoline (RVP 6)						2.7720	2.3176	3.2986	69.0000	0.0900	0.4686	92.00	Option 4: RVP=6, ASTM Slope=3
Toluene						0.3031	0.2314	0.3928	92.1300	0.0025	0.0019	92.13	Option 2: A=6.954, B=1344.8, C=219.48
Water						0.2314	0.1699	0.3115	18.0150	0.9000	0.5215	18.02	Option 2: A=8.07131, B=1730.63, C=233.426
Xylenes (mixed isomers)						0.0821	0.0605	0.1100	106.1700	0.0025	0.0005	106.17	Option 2: A=7.009, B=1462.266, C=215.11
100,000ppm VOC (10%) HEP Shalewater	Apr	62.02	52.57	72.66	57.22	0.3348	0.2386	0.4619	27.2734			19.59	
Benzene						1.2553	0.9470	1.6425	78.1100	0.0025	0.0067	78.11	Option 2: A=6.905, B=1211.033, C=220.79
Ethylbenzene						0.1188	0.0834	0.1665	106.1700	0.0025	0.0006	106.17	Option 2: A=6.975, B=1424.255, C=213.21
Gasoline (RVP 6)						3.0979	2.5091	3.7946	69.0000	0.0900	0.4490	92.00	Option 4: RVP=6, ASTM Slope=3
Toluene						0.3580	0.2609	0.4842	92.1300	0.0025	0.0019	92.13	Option 2: A=6.954, B=1344.8, C=219.48
Water						0.2801	0.1949	0.3962	18.0150	0.9000	0.5412	18.02	Option 2: A=8.07131, B=1730.63, C=233.426
Xylenes (mixed isomers)						0.0990	0.0693	0.1392	106.1700	0.0025	0.0005	106.17	Option 2: A=7.009, B=1462.266, C=215.11
100,000ppm VOC (10%) HEP Shalewater	May	67.58	56.53	78.63	57.22	0.3929	0.2737	0.5565	26.7465			19.59	
Benzene						1.4358	1.0589	1.9158	78.1100	0.0025	0.0067	78.11	Option 2: A=6.905, B=1211.033, C=220.79
Ethylbenzene						0.1408	0.0961	0.2018	106.1700	0.0025	0.0007	106.17	Option 2: A=6.975, B=1424.255, C=213.21
Gasoline (RVP 6)						3.4276	2.7290	4.2650	69.0000	0.0900	0.4314	92.00	Option 4: RVP=6, ASTM Slope=3
Toluene						0.4163	0.2961	0.5755	92.1300	0.0025	0.0019	92.13	Option 2: A=6.954, B=1344.8, C=219.48
Water						0.3330	0.2262	0.4833	18.0150	0.9000	0.5588	18.02	Option 2: A=8.07131, B=1730.63, C=233.426
Xylenes (mixed isomers)						0.1174	0.0799	0.1691	106.1700	0.0025	0.0005	106.17	Option 2: A=7.009, B=1462.266, C=215.11
100,000ppm VOC (10%) HEP Shalewater	Jun	71.63	60.22	83.05	57.22	0.4471	0.3092	0.6373	25.3434			19.59	
Benzene						1.5888	1.1749	2.1416	78.1100	0.0025	0.0066	78.11	Option 2: A=6.905, B=1211.033, C=220.79
Ethylbenzene						0.1609	0.1084	0.2321	106.1700	0.0025	0.0007	106.17	Option 2: A=6.975, B=1424.255, C=213.21
Gasoline (RVP 6)						3.7178	2.9479	4.6432	69.0000	0.0900	0.4174	92.00	Option 4: RVP=6, ASTM Slope=3
Toluene						0.4697	0.3324	0.6521	92.1300	0.0025	0.0020	92.13	Option 2: A=6.954, B=1344.8, C=219.48
Water						0.3826	0.2572	0.5583	18.0150	0.9000	0.5727	18.02	Option 2: A=8.07131, B=1730.63, C=233.426
Xylenes (mixed isomers)						0.1345	0.0911	0.1947	106.1700	0.0025	0.0006	106.17	Option 2: A=7.009, B=1462.266, C=215.11
100,000ppm VOC (10%) HEP Shalewater	Jul	72.90	62.13	83.68	57.22	0.4654	0.3292	0.6497	26.2220			19.59	
Benzene						1.6529	1.2384	2.1756	78.1100	0.0025	0.0066	78.11	Option 2: A=6.905, B=1211.033, C=220.79
Ethylbenzene						0.1678	0.1168	0.2367	106.1700	0.0025	0.0007	106.17	Option 2: A=6.975, B=1424.255, C=213.21
Gasoline (RVP 6)						3.8127	3.0666	4.6994	69.0000	0.0900	0.4131	92.00	Option 4: RVP=6, ASTM Slope=3
Toluene						0.4873	0.3526	0.6637	92.1300	0.0025	0.0020	92.13	Option 2: A=6.954, B=1344.8, C=219.48
Water						0.3994	0.2752	0.5698	18.0150	0.9000	0.5770	18.02	Option 2: A=8.07131, B=1730.63, C=233.426
Xylenes (mixed isomers)						0.1403	0.0974	0.1987	106.1700	0.0025	0.0006	106.17	Option 2: A=7.009, B=1462.266, C=215.11
100,000ppm VOC (10%) HEP Shalewater	Aug	71.71	61.60	81.82	57.22	0.4482	0.3235	0.6139	26.3362			19.59	
Benzene						1.6019	1.2205	2.0768	78.1100	0.0025	0.0066	78.11	Option 2: A=6.905, B=1211.033, C=220.79
Ethylbenzene						0.1613	0.1147	0.2233	106.1700	0.0025	0.0007	106.17	Option 2: A=6.975, B=1424.255, C=213.21
Gasoline (RVP 6)						3.7233	3.0332	4.5356	69.0000	0.0900	0.4172	92.00	Option 4: RVP=6, ASTM Slope=3
Toluene						0.4707	0.3469	0.6300	92.1300	0.0025	0.0020	92.13	Option 2: A=6.954, B=1344.8, C=219.48
Water						0.3836	0.2701	0.5365	18.0150	0.9000	0.5730	18.02	Option 2: A=8.07131, B=1730.63, C=233.426
Xylenes (mixed isomers)						0.1349	0.0956	0.1873	106.1700	0.0025	0.0006	106.17	Option 2: A=7.009, B=1462.266, C=215.11
100,000ppm VOC (10%) HEP Shalewater	Sep	67.66	58.46	76.85	57.22	0.3938	0.2918	0.5266	26.7387			19.59	
Benzene						1.4387	1.1190	1.8306	78.1100	0.0025	0.0067	78.11	Option 2: A=6.905, B=1211.033, C=220.79
Ethylbenzene						0.1410	0.1029	0.1907	106.1700	0.0025	0.0007	106.17	Option 2: A=6.975, B=1424.255, C=213.21
Gasoline (RVP 6)						3.4329	2.8420	4.1199	69.0000	0.0900	0.4311	92.00	Option 4: RVP=6, ASTM Slope=3
Toluene						0.4172	0.3147	0.5468	92.1300	0.0025	0.0019	92.13	Option 2: A=6.954, B=1344.8, C=219.48
Water						0.3339	0.2415	0.4557	18.0150	0.9000	0.5591	18.02	Option 2: A=8.07131, B=1730.63, C=233.426
Xylenes (mixed isomers)						0.1177	0.0856	0.1597	106.1700	0.0025	0.0005	106.17	Option 2: A=7.009, B=1462.266, C=215.11
100,000ppm VOC (10%) HEP Shalewater	Oct	61.24	52.98	69.51	57.22	0.3197	0.2428	0.4179	27.4272			19.59	
Benzene						1.2085	0.9576	1.5116	78.1100	0.0025	0.0067	78.11	Option 2: A=6.905, B=1211.033, C=220.79
Ethylbenzene						0.1133	0.0846	0.1500	106.1700	0.0025	0.0006	106.17	Option 2: A=6.975, B=1424.255, C=213.21
Gasoline (RVP 6)						3.0107	2.5300	3.5834	69.0000	0.0900	0.4540	92.00	Option 4: RVP=6, ASTM Slope=3
Toluene						0.3431	0.2642	0.4410	92.1300	0.0025	0.0019	92.13	Option 2: A=6.954, B=1344.8, C=219.48
Water						0.2687	0.1977	0.3559	18.0150	0.9000	0.5382	18.02	Option 2: A=8.07131, B=1730.63, C=233.426
Xylenes (mixed isomers)						0.0944	0.0703	0.1253	106.1700	0.0025	0.0005	106.17	Option 2: A=7.009, B=1462.266, C=215.11
100,000ppm VOC (10%) HEP Shalewater	Nov	55.53	49.19	61.88	57.22	0.2647	0.2136	0.3266	28.0954			19.59	
Benzene						1.0304	0.8585	1.2301	78.1100	0.0025	0.0068	78.11	Option 2: A=6.905, B=1211.033, C=220.79
Ethylbenzene						0.0927	0.0737	0.1158	106.1700	0.0025	0.0006	106.17	Option 2: A=6.975, B=1424.255, C=213.21
Gasoline (RVP 6)						2.6722	2.3326	3.0511	69.0000	0.0900	0.4752	92.00	Option 4: RVP=6, ASTM Slope=3
Toluene						0.2868	0.2337	0.3500	92.1300	0.0025	0.0019	92.13	Option 2: A=6.954, B=1344.8, C=219.48
Water						0.2172	0.1718	0.2728	18.0150	0.9000	0.5150	18.02	Option 2: A=8.07131, B=1730.63, C=233.426
Xylenes (mixed isomers)						0.0771	0.0612	0.0965	106.1700	0.0025	0.0005	106.17	Option 2: A=7.009, B=1462.266, C=215.11
100,000ppm VOC (10%) HEP Shalewater	Dec	50.60	45.34	55.85	57.22	0.2241	0.1871	0.2675	28.7203			19.59	
Benzene						0.8945	0.7666	1.0398	78.1100	0.0025	0.0068	78.11	Option 2: A=6.905, B=1211.033, C=220.79
Ethylbenzene						0.0775	0.0639	0.0938	106.1700	0.0025	0.0006	106.17	Option 2: A=6.975, B=1424.255, C=213.21
Gasoline (RVP 6)						2.4049	2.1418	2.6903	69.0000	0.0900	0.4941	92.00	Option 4: RVP=6, ASTM Slope=3
Toluene						0.2447	0.2058	0.2898	92.1300	0.0025	0.0019	92.13	Option 2: A=6.954, B=1344.8, C=219.48
Water						0.1811	0.1485	0.2198	18.0150	0.9000	0.4961	18.02	Option 2: A=8.07131, B=1730.63, C=233.426
Xylenes (mixed isomers)						0.0644	0.0530	0.0780	106.1700	0.0025	0.0005	106.17	Option 2: A=7.009, B=1462.266, C=215.11

TANKS 4.0.9d
Emissions Report - Detail Format
Detail Calculations (AP-42)

SI 1-2 - Horizontal Tank
, West Virginia

Month:	January	February	March	April	May	June	July	August	September	October	November	December
Standing Losses (lb):	2.4760	2.9088	4.8065	6.5442	8.5812	8.6489	8.7294	8.7982	6.8674	5.2977	3.2866	2.4060
Vapor Space Volume (cu ft):	1,626.4495	1,626.4495	1,626.4495	1,626.4495	1,626.4495	1,626.4495	1,626.4495	1,626.4495	1,626.4495	1,626.4495	1,626.4495	1,626.4495
Vapor Density (lb/cu ft):	0.0011	0.0012	0.0014	0.0016	0.0019	0.0021	0.0021	0.0021	0.0019	0.0016	0.0013	0.0012
Vapor Space Expansion Factor:	0.0459	0.0550	0.0719	0.0886	0.0999	0.1054	0.0998	0.0928	0.0823	0.0718	0.0531	0.0426
Vented Vapor Saturation Factor:	0.9546	0.9509	0.9406	0.9299	0.9187	0.9085	0.9051	0.9083	0.9185	0.9328	0.9437	0.9519
Tank Vapor Space Volume:												
Vapor Space Volume (cu ft):	1,626.4495	1,626.4495	1,626.4495	1,626.4495	1,626.4495	1,626.4495	1,626.4495	1,626.4495	1,626.4495	1,626.4495	1,626.4495	1,626.4495
Tank Diameter (ft):	8.5000	8.5000	8.5000	8.5000	8.5000	8.5000	8.5000	8.5000	8.5000	8.5000	8.5000	8.5000
Effective Diameter (ft):	22.0740	22.0740	22.0740	22.0740	22.0740	22.0740	22.0740	22.0740	22.0740	22.0740	22.0740	22.0740
Vapor Space Outage (ft):	4.2500	4.2500	4.2500	4.2500	4.2500	4.2500	4.2500	4.2500	4.2500	4.2500	4.2500	4.2500
Tank Shell Length (ft):	45.0000	45.0000	45.0000	45.0000	45.0000	45.0000	45.0000	45.0000	45.0000	45.0000	45.0000	45.0000
Vapor Density												
Vapor Density (lb/cu ft):	0.0011	0.0012	0.0014	0.0016	0.0019	0.0021	0.0021	0.0021	0.0019	0.0016	0.0013	0.0012
Vapor Molecular Weight (lb/lb-mole):	28.9541	28.6297	27.8856	27.2734	26.7465	26.3434	26.2220	26.3362	26.7387	27.4272	28.0954	28.7203
Vapor Pressure at Daily Average Liquid Surface Temperature (psia):	0.2111	0.2294	0.2805	0.3346	0.3929	0.4471	0.4654	0.4482	0.3938	0.3197	0.2647	0.2241
Daily Avg. Liquid Surface Temp. (deg. R):	508.5095	510.9624	516.9429	522.2886	527.2494	531.3037	532.5737	531.3788	527.3254	520.9055	515.2035	510.2689
Daily Average Ambient Temp. (deg. F):	32.1000	35.5000	45.8500	54.8000	63.5000	71.4500	75.0500	73.9000	67.6500	56.2000	46.6000	37.0000
Ideal Gas Constant R (psia cuft / (lb-mol-deg R)):	10.731	10.731	10.731	10.731	10.731	10.731	10.731	10.731	10.731	10.731	10.731	10.731
Liquid Bulk Temperature (deg. R):	516.8933	516.8933	516.8933	516.8933	516.8933	516.8933	516.8933	516.8933	516.8933	516.8933	516.8933	516.8933
Tank Paint Solar Absorptance (Shell):	0.5400	0.5400	0.5400	0.5400	0.5400	0.5400	0.5400	0.5400	0.5400	0.5400	0.5400	0.5400
Daily Total Solar Insulation Factor (Btu/sqft day):	825.9737	850.2836	1,184.6862	1,514.6470	1,780.2020	1,910.5969	1,836.9933	1,675.5029	1,369.9719	1,046.0392	678.9578	533.0136
Vapor Space Expansion Factor												
Vapor Space Expansion Factor:	0.0459	0.0550	0.0719	0.0886	0.0999	0.1054	0.0998	0.0928	0.0823	0.0718	0.0531	0.0426
Daily Vapor Temperature Range (deg. R):	22.5687	26.9683	33.7365	40.1815	44.1967	45.3643	43.1113	40.4536	36.7700	33.0961	25.3858	21.0192
Daily Vapor Pressure Range (psia):	0.0818	0.1056	0.1579	0.2223	0.2828	0.3281	0.3205	0.2903	0.2348	0.1751	0.1130	0.0804
Breather Vent Press. Setting Range(psia):	0.0600	0.0600	0.0600	0.0600	0.0600	0.0600	0.0600	0.0600	0.0600	0.0600	0.0600	0.0600
Vapor Pressure at Daily Average Liquid Surface Temperature (psia):	0.2111	0.2294	0.2805	0.3346	0.3929	0.4471	0.4654	0.4482	0.3938	0.3197	0.2647	0.2241
Vapor Pressure at Daily Minimum Liquid Surface Temperature (psia):	0.1737	0.1821	0.2114	0.2396	0.2737	0.3092	0.3292	0.3235	0.2918	0.2428	0.2136	0.1871
Vapor Pressure at Daily Maximum Liquid Surface Temperature (psia):	0.2555	0.2877	0.3693	0.4619	0.5565	0.6373	0.6497	0.6139	0.5266	0.4179	0.3266	0.2675
Daily Avg. Liquid Surface Temp. (deg R):	508.5095	510.9624	516.9429	522.2886	527.2494	531.3037	532.5737	531.3788	527.3254	520.9055	515.2035	510.2689
Daily Min. Liquid Surface Temp. (deg R):	502.8673	504.2203	508.5588	512.2432	516.2002	519.8876	521.7958	521.2654	518.1329	512.6314	508.8570	505.0141
Daily Max. Liquid Surface Temp. (deg R):	514.1517	517.7044	525.3271	532.3339	538.2886	542.7198	543.3515	541.4922	536.5179	529.1795	521.5500	515.5237
Daily Ambient Temp. Range (deg. R):	18.2000	19.6000	21.7000	24.0000	24.0000	23.3000	21.3000	21.0000	22.3000	24.0000	21.0000	18.0000
Vented Vapor Saturation Factor												
Vented Vapor Saturation Factor:	0.9546	0.9509	0.9406	0.9299	0.9187	0.9085	0.9051	0.9083	0.9185	0.9328	0.9437	0.9519
Vapor Pressure at Daily Average Liquid Surface Temperature (psia):	0.2111	0.2294	0.2805	0.3346	0.3929	0.4471	0.4654	0.4482	0.3938	0.3197	0.2647	0.2241
Vapor Space Outage (ft):	4.2500	4.2500	4.2500	4.2500	4.2500	4.2500	4.2500	4.2500	4.2500	4.2500	4.2500	4.2500
Working Losses (lb):	36.6356	39.3621	46.8942	54.7019	62.9962	70.6114	73.1641	70.7600	63.1317	52.5749	44.5835	38.5870
Vapor Molecular Weight (lb/lb-mole):	28.9541	28.6297	27.8856	27.2734	26.7465	26.3434	26.2220	26.3362	26.7387	27.4272	28.0954	28.7203
Vapor Pressure at Daily Average Liquid Surface Temperature (psia):	0.2111	0.2294	0.2805	0.3346	0.3929	0.4471	0.4654	0.4482	0.3938	0.3197	0.2647	0.2241
Net Throughput (gal/mo.):	1,255,782.5000	1,255,782.5000	1,255,782.5000	1,255,782.5000	1,255,782.5000	1,255,782.5000	1,255,782.5000	1,255,782.5000	1,255,782.5000	1,255,782.5000	1,255,782.5000	1,255,782.5000
Annual Turnovers:	886.4347	886.4347	886.4347	886.4347	886.4347	886.4347	886.4347	886.4347	886.4347	886.4347	886.4347	886.4347
Turnover Factor:	0.2005	0.2005	0.2005	0.2005	0.2005	0.2005	0.2005	0.2005	0.2005	0.2005	0.2005	0.2005
Tank Diameter (ft):	8.5000	8.5000	8.5000	8.5000	8.5000	8.5000	8.5000	8.5000	8.5000	8.5000	8.5000	8.5000
Working Loss Product Factor:	1.0000	1.0000	1.0000	1.0000	1.0000	1.0000	1.0000	1.0000	1.0000	1.0000	1.0000	1.0000
Total Losses (lb):	39.1115	42.2690	51.7007	61.2461	71.5904	80.2603	82.8934	79.5583	69.9991	57.8726	47.8701	40.9829

TANKS 4.0.9d
Emissions Report - Detail Format
Individual Tank Emission Totals

Emissions Report for: Annual

SI 1-2 - Horizontal Tank
, West Virginia

	Losses(lbs)		
Components	Working Loss	Breathing Loss	Total Emissions
100,000ppm VOC (10%) HEP Shalewater	654.02	71.36	725.38
Benzene	4.39	0.48	4.87
Ethylbenzene	0.42	0.05	0.46
Gasoline (RVP 6)	291.98	31.40	323.38
Toluene	1.26	0.14	1.39
Water	355.63	39.26	394.89
Xylenes (mixed isomers)	0.35	0.04	0.39

TANKS 4.0.9d
Emissions Report - Detail Format
Tank Indentification and Physical Characteristics

Identification

User Identification:	FT 1
City:	West Virginia
State:	Ohio
Company:	HEP Shalewater Solutions LLC.
Type of Tank:	Horizontal Tank
Description:	1 - 21,000gal Filtrate Tank

Tank Dimensions

Shell Length (ft):	45.00
Diameter (ft):	8.50
Volume (gallons):	17,000.00
Turnovers:	531.86
Net Throughput(gal/yr):	9,041,634.00
Is Tank Heated (y/n):	N
Is Tank Underground (y/n):	N

Paint Characteristics

Shell Color/Shade:	Gray/Light
Shell Condition	Good

Breather Vent Settings

Vacuum Settings (psig):	-0.03
Pressure Settings (psig)	0.03

Meterological Data used in Emissions Calculations: Charleston, West Virginia (Avg Atmospheric Pressure = 14.25 psia)

TANKS 4.0.9d
Emissions Report - Detail Format
Liquid Contents of Storage Tank

FT 1 - Horizontal Tank
West Virginia, Ohio

Mixture/Component	Month	Daily Liquid Surf. Temperature (deg F) Avg.	Min.	Max.	Liquid Bulk Temp (deg F)	Vapor Pressure (psia) Avg.	Min.	Max.	Vapor Mol. Weight	Liquid Mass Fract.	Vapor Mass Fract.	Mol. Weight	Basis for Vapor Pressure Calculations
100,000ppm VOC (10%) HEP Shalewater	Jan	48.84	43.20	54.48	57.22	0.2111	0.1737	0.2555	28.9541			19.59	
Benzene						0.8499	0.7169	1.0001	78.1100	0.0025	0.0068	78.11	Option 2: A=6.905, B=1211.033, C=220.79
Ethylbenzene						0.0728	0.0590	0.0893	106.1700	0.0025	0.0006	106.17	Option 2: A=6.975, B=1424.255, C=213.21
Gasoline (RVP 6)						2.3151	2.0453	2.6133	69.0000	0.0900	0.5010	92.00	Option 4: RVP=6, ASTM Slope=3
Toluene						0.2310	0.1914	0.2774	92.1300	0.0025	0.0019	92.13	Option 2: A=6.954, B=1344.8, C=219.48
Water						0.1858	0.1368	0.2090	18.0150	0.9000	0.4893	18.02	Option 2: A=8.07131, B=1730.63, C=233.426
Xylenes (mixed isomers)						0.0604	0.0488	0.0742	106.1700	0.0025	0.0005	106.17	Option 2: A=7.009, B=1462.266, C=215.11
100,000ppm VOC (10%) HEP Shalewater	Feb	51.29	44.55	58.03	57.22	0.2294	0.1821	0.2877	28.6297			19.59	
Benzene						0.9127	0.7487	1.1056	78.1100	0.0025	0.0068	78.11	Option 2: A=6.905, B=1211.033, C=220.79
Ethylbenzene						0.0796	0.0621	0.1013	106.1700	0.0025	0.0006	106.17	Option 2: A=6.975, B=1424.255, C=213.21
Gasoline (RVP 6)						2.4411	2.1076	2.8166	69.0000	0.0900	0.4914	92.00	Option 4: RVP=6, ASTM Slope=3
Toluene						0.2503	0.2004	0.3104	92.1300	0.0025	0.0019	92.13	Option 2: A=6.954, B=1344.8, C=219.48
Water						0.1858	0.1441	0.2378	18.0150	0.9000	0.4888	18.02	Option 2: A=8.07131, B=1730.63, C=233.426
Xylenes (mixed isomers)						0.0661	0.0514	0.0843	106.1700	0.0025	0.0005	106.17	Option 2: A=7.009, B=1462.266, C=215.11
100,000ppm VOC (10%) HEP Shalewater	Mar	57.27	48.89	65.68	57.22	0.2805	0.2114	0.3693	27.8858			19.59	
Benzene						1.0823	0.8511	1.3634	78.1100	0.0025	0.0068	78.11	Option 2: A=6.905, B=1211.033, C=220.79
Ethylbenzene						0.0986	0.0729	0.1318	106.1700	0.0025	0.0006	106.17	Option 2: A=6.975, B=1424.255, C=213.21
Gasoline (RVP 6)						2.7720	2.3176	3.2966	69.0000	0.0900	0.4686	92.00	Option 4: RVP=6, ASTM Slope=3
Toluene						0.3031	0.2314	0.3928	92.1300	0.0025	0.0019	92.13	Option 2: A=6.954, B=1344.8, C=219.48
Water						0.2314	0.1699	0.3115	18.0150	0.9000	0.5215	18.02	Option 2: A=8.07131, B=1730.63, C=233.426
Xylenes (mixed isomers)						0.0821	0.0605	0.1100	106.1700	0.0025	0.0005	106.17	Option 2: A=7.009, B=1462.266, C=215.11
100,000ppm VOC (10%) HEP Shalewater	Apr	62.62	52.57	72.66	57.22	0.3346	0.2396	0.4619	27.2734			19.59	
Benzene						1.2553	0.9470	1.6425	78.1100	0.0025	0.0067	78.11	Option 2: A=6.905, B=1211.033, C=220.79
Ethylbenzene						0.1188	0.0834	0.1665	106.1700	0.0025	0.0006	106.17	Option 2: A=6.975, B=1424.255, C=213.21
Gasoline (RVP 6)						3.0979	2.5091	3.7946	69.0000	0.0900	0.4490	92.00	Option 4: RVP=6, ASTM Slope=3
Toluene						0.3580	0.2609	0.4642	92.1300	0.0025	0.0019	92.13	Option 2: A=6.954, B=1344.8, C=219.48
Water						0.2801	0.1949	0.3982	18.0150	0.9000	0.5412	18.02	Option 2: A=8.07131, B=1730.63, C=233.426
Xylenes (mixed isomers)						0.0990	0.0693	0.1392	106.1700	0.0025	0.0005	106.17	Option 2: A=7.009, B=1462.266, C=215.11
100,000ppm VOC (10%) HEP Shalewater	May	67.58	56.53	78.63	57.22	0.3929	0.2737	0.5585	26.7465			19.59	
Benzene						1.4358	1.0599	1.9158	78.1100	0.0025	0.0067	78.11	Option 2: A=6.905, B=1211.033, C=220.79
Ethylbenzene						0.1406	0.0961	0.2018	106.1700	0.0025	0.0007	106.17	Option 2: A=6.975, B=1424.255, C=213.21
Gasoline (RVP 6)						3.4276	2.7290	4.2650	69.0000	0.0900	0.4314	92.00	Option 4: RVP=6, ASTM Slope=3
Toluene						0.4163	0.2961	0.5755	92.1300	0.0025	0.0019	92.13	Option 2: A=6.954, B=1344.8, C=219.48
Water						0.3330	0.2252	0.4833	18.0150	0.9000	0.5568	18.02	Option 2: A=8.07131, B=1730.63, C=233.426
Xylenes (mixed isomers)						0.1174	0.0799	0.1691	106.1700	0.0025	0.0005	106.17	Option 2: A=7.009, B=1462.266, C=215.11
100,000ppm VOC (10%) HEP Shalewater	Jun	71.63	60.22	83.05	57.22	0.4471	0.3082	0.6373	26.3434			19.59	
Benzene						1.5888	1.1749	2.1416	78.1100	0.0025	0.0066	78.11	Option 2: A=6.905, B=1211.033, C=220.79
Ethylbenzene						0.1609	0.1094	0.2321	106.1700	0.0025	0.0007	106.17	Option 2: A=6.975, B=1424.255, C=213.21
Gasoline (RVP 6)						3.7178	2.9478	4.6432	69.0000	0.0900	0.4174	92.00	Option 4: RVP=6, ASTM Slope=3
Toluene						0.4697	0.3324	0.6521	92.1300	0.0025	0.0020	92.13	Option 2: A=6.954, B=1344.8, C=219.48
Water						0.3826	0.2572	0.5583	18.0150	0.9000	0.5727	18.02	Option 2: A=8.07131, B=1730.63, C=233.426
Xylenes (mixed isomers)						0.1345	0.0911	0.1947	106.1700	0.0025	0.0006	106.17	Option 2: A=7.009, B=1462.266, C=215.11
100,000ppm VOC (10%) HEP Shalewater	Jul	72.90	62.13	83.68	57.22	0.4654	0.3282	0.6497	26.2220			19.59	
Benzene						1.6529	1.2384	2.1756	78.1100	0.0025	0.0066	78.11	Option 2: A=6.905, B=1211.033, C=220.79
Ethylbenzene						0.1678	0.1168	0.2367	106.1700	0.0025	0.0007	106.17	Option 2: A=6.975, B=1424.255, C=213.21
Gasoline (RVP 6)						3.8127	3.0666	4.6994	69.0000	0.0900	0.4131	92.00	Option 4: RVP=6, ASTM Slope=3
Toluene						0.4876	0.3526	0.6637	92.1300	0.0025	0.0020	92.13	Option 2: A=6.954, B=1344.8, C=219.48
Water						0.3994	0.2752	0.5698	18.0150	0.9000	0.5770	18.02	Option 2: A=8.07131, B=1730.63, C=233.426
Xylenes (mixed isomers)						0.1403	0.0974	0.1987	106.1700	0.0025	0.0006	106.17	Option 2: A=7.009, B=1462.266, C=215.11
100,000ppm VOC (10%) HEP Shalewater	Aug	71.71	61.60	81.82	57.22	0.4482	0.3235	0.6139	26.3362			19.59	
Benzene						1.6019	1.2205	2.0788	78.1100	0.0025	0.0066	78.11	Option 2: A=6.905, B=1211.033, C=220.79
Ethylbenzene						0.1613	0.1147	0.2233	106.1700	0.0025	0.0007	106.17	Option 2: A=6.975, B=1424.255, C=213.21
Gasoline (RVP 6)						3.7233	3.0332	4.5356	69.0000	0.0900	0.4172	92.00	Option 4: RVP=6, ASTM Slope=3
Toluene						0.4707	0.3469	0.6300	92.1300	0.0025	0.0020	92.13	Option 2: A=6.954, B=1344.8, C=219.48
Water						0.3838	0.2701	0.5365	18.0150	0.9000	0.5730	18.02	Option 2: A=8.07131, B=1730.63, C=233.426
Xylenes (mixed isomers)						0.1349	0.0956	0.1873	106.1700	0.0025	0.0006	106.17	Option 2: A=7.009, B=1462.266, C=215.11
100,000ppm VOC (10%) HEP Shalewater	Sep	67.66	58.46	76.85	57.22	0.3938	0.2918	0.5266	26.7387			19.59	
Benzene						1.4387	1.1190	1.8306	78.1100	0.0025	0.0067	78.11	Option 2: A=6.905, B=1211.033, C=220.79
Ethylbenzene						0.1410	0.1029	0.1907	106.1700	0.0025	0.0007	106.17	Option 2: A=6.975, B=1424.255, C=213.21
Gasoline (RVP 6)						3.4329	2.8420	4.1199	69.0000	0.0900	0.4311	92.00	Option 4: RVP=6, ASTM Slope=3
Toluene						0.4172	0.3147	0.5468	92.1300	0.0025	0.0019	92.13	Option 2: A=6.954, B=1344.8, C=219.48
Water						0.3339	0.2415	0.4557	18.0150	0.9000	0.5591	18.02	Option 2: A=8.07131, B=1730.63, C=233.426
Xylenes (mixed isomers)						0.1177	0.0856	0.1597	106.1700	0.0025	0.0005	106.17	Option 2: A=7.009, B=1462.266, C=215.11
100,000ppm VOC (10%) HEP Shalewater	Oct	61.24	52.96	69.51	57.22	0.3197	0.2428	0.4179	27.4272			19.59	
Benzene						1.2065	0.9576	1.5116	78.1100	0.0025	0.0067	78.11	Option 2: A=6.905, B=1211.033, C=220.79
Ethylbenzene						0.1133	0.0846	0.1500	106.1700	0.0025	0.0006	106.17	Option 2: A=6.975, B=1424.255, C=213.21
Gasoline (RVP 6)						3.0107	2.5300	3.5834	69.0000	0.0900	0.4540	92.00	Option 4: RVP=6, ASTM Slope=3
Toluene						0.3431	0.2642	0.4410	92.1300	0.0025	0.0019	92.13	Option 2: A=6.954, B=1344.8, C=219.48
Water						0.2667	0.1977	0.3559	18.0150	0.9000	0.5362	18.02	Option 2: A=8.07131, B=1730.63, C=233.426
Xylenes (mixed isomers)						0.0944	0.0703	0.1253	106.1700	0.0025	0.0005	106.17	Option 2: A=7.009, B=1462.266, C=215.11
100,000ppm VOC (10%) HEP Shalewater	Nov	55.53	49.19	61.88	57.22	0.2647	0.2136	0.3268	28.0954			19.59	
Benzene						1.0304	0.8585	1.2301	78.1100	0.0025	0.0068	78.11	Option 2: A=6.905, B=1211.033, C=220.79
Ethylbenzene						0.0927	0.0737	0.1158	106.1700	0.0025	0.0006	106.17	Option 2: A=6.975, B=1424.255, C=213.21
Gasoline (RVP 6)						2.6722	2.3326	3.0511	69.0000	0.0900	0.4752	92.00	Option 4: RVP=6, ASTM Slope=3
Toluene						0.2868	0.2337	0.3500	92.1300	0.0025	0.0019	92.13	Option 2: A=6.954, B=1344.8, C=219.48
Water						0.2172	0.1718	0.2728	18.0150	0.9000	0.5150	18.02	Option 2: A=8.07131, B=1730.63, C=233.426
Xylenes (mixed isomers)						0.0771	0.0612	0.0965	106.1700	0.0025	0.0005	106.17	Option 2: A=7.009, B=1462.266, C=215.11
100,000ppm VOC (10%) HEP Shalewater	Dec	50.80	45.24	55.85	57.22	0.2241	0.1871	0.2675	28.7203			19.59	
Benzene						0.8945	0.7666	1.0398	78.1100	0.0025	0.0068	78.11	Option 2: A=6.905, B=1211.033, C=220.79
Ethylbenzene						0.0776	0.0639	0.0938	106.1700	0.0025	0.0006	106.17	Option 2: A=6.975, B=1424.255, C=213.21
Gasoline (RVP 6)						2.4049	2.1448	2.6903	69.0000	0.0900	0.4941	92.00	Option 4: RVP=6, ASTM Slope=3
Toluene						0.2447	0.2058	0.2898	92.1300	0.0025	0.0019	92.13	Option 2: A=6.954, B=1344.8, C=219.48
Water						0.1811	0.1485	0.2198	18.0150	0.9000	0.4961	18.02	Option 2: A=8.07131, B=1730.63, C=233.426
Xylenes (mixed isomers)						0.0644	0.0530	0.0780	106.1700	0.0025	0.0005	106.17	Option 2: A=7.009, B=1462.266, C=215.11

TANKS 4.0.9d
Emissions Report - Detail Format
Detail Calculations (AP-42)

FT 1 - Horizontal Tank
West Virginia, Ohio

Month:	January	February	March	April	May	June	July	August	September	October	November	December
Standing Losses (lb):	2.4760	2.9089	4.8065	6.5442	8.5942	9.8489	9.7294	8.7982	6.8674	5.2977	3.2868	2.4080
Vapor Space Volume (cu ft):	1,626.4495	1,626.4495	1,626.4495	1,626.4495	1,626.4495	1,626.4495	1,626.4495	1,626.4495	1,626.4495	1,626.4495	1,626.4495	1,626.4495
Vapor Density (lb/cu ft):	0.0011	0.0012	0.0014	0.0016	0.0019	0.0021	0.0021	0.0021	0.0019	0.0016	0.0013	0.0012
Vapor Space Expansion Factor:	0.0459	0.0560	0.0719	0.0886	0.0999	0.1054	0.0998	0.0928	0.0823	0.0718	0.0531	0.0426
Vented Vapor Saturation Factor:	0.9546	0.9509	0.9406	0.9299	0.9187	0.9085	0.9051	0.9083	0.9185	0.9328	0.9437	0.9519
Tank Vapor Space Volume:												
Vapor Space Volume (cu ft):	1,626.4495	1,626.4495	1,626.4495	1,626.4495	1,626.4495	1,626.4495	1,626.4495	1,626.4495	1,626.4495	1,626.4495	1,626.4495	1,626.4495
Tank Diameter (ft):	8.5000	8.5000	8.5000	8.5000	8.5000	8.5000	8.5000	8.5000	8.5000	8.5000	8.5000	8.5000
Effective Diameter (ft):	22.0740	22.0740	22.0740	22.0740	22.0740	22.0740	22.0740	22.0740	22.0740	22.0740	22.0740	22.0740
Vapor Space Outage (ft):	4.2500	4.2500	4.2500	4.2500	4.2500	4.2500	4.2500	4.2500	4.2500	4.2500	4.2500	4.2500
Tank Shell Length (ft):	45.0000	45.0000	45.0000	45.0000	45.0000	45.0000	45.0000	45.0000	45.0000	45.0000	45.0000	45.0000
Vapor Density												
Vapor Density (lb/cu ft):	0.0011	0.0012	0.0014	0.0016	0.0019	0.0021	0.0021	0.0021	0.0019	0.0016	0.0013	0.0012
Vapor Molecular Weight (lb/lb-mole):	28.9541	28.6297	27.8656	27.2734	26.7465	26.3434	26.2220	26.3362	26.7387	27.4272	28.0954	28.7203
Vapor Pressure at Daily Average Liquid Surface Temperature (psia):	0.2111	0.2294	0.2805	0.3346	0.3929	0.4471	0.4654	0.4482	0.3938	0.3197	0.2647	0.2241
Daily Avg. Liquid Surface Temp. (deg. R):	508.5095	510.8624	516.9429	522.2886	527.2494	531.3037	532.5737	531.3788	527.3254	520.9055	515.2035	510.2689
Daily Average Ambient Temp. (deg. F):	32.1000	35.5000	45.8500	54.8000	63.5000	71.4500	75.0500	73.9000	67.6500	56.2000	46.8000	37.0000
Ideal Gas Constant R (psia cuft / (lb-mol-deg R)):	10.731	10.731	10.731	10.731	10.731	10.731	10.731	10.731	10.731	10.731	10.731	10.731
Liquid Bulk Temperature (deg. R):	516.8933	516.8933	516.8933	516.8933	516.8933	516.8933	516.8933	516.8933	516.8933	516.8933	516.8933	516.8933
Tank Paint Solar Absorptance (Shell):	0.5400	0.5400	0.5400	0.5400	0.5400	0.5400	0.5400	0.5400	0.5400	0.5400	0.5400	0.5400
Daily Total Solar Insulation Factor (Btu/sqft day):	625.9737	850.2836	1,184.6862	1,514.6470	1,780.2020	1,910.5999	1,836.9933	1,675.5029	1,368.9719	1,046.0392	678.9578	533.0136
Vapor Space Expansion Factor												
Vapor Space Expansion Factor:	0.0459	0.0560	0.0719	0.0886	0.0999	0.1054	0.0998	0.0928	0.0823	0.0718	0.0531	0.0426
Daily Vapor Temperature Range (deg. R):	22.5687	26.9583	33.5365	40.1815	44.1967	45.6643	43.1113	40.4536	36.7700	33.0961	25.3858	21.0192
Daily Vapor Pressure Range (psia):	0.0818	0.1056	0.1579	0.2223	0.2828	0.3281	0.3205	0.2903	0.2348	0.1751	0.1130	0.0804
Breather Vent Press. Setting Range(psia):	0.0600	0.0600	0.0600	0.0600	0.0600	0.0600	0.0600	0.0600	0.0600	0.0600	0.0600	0.0600
Vapor Pressure at Daily Average Liquid Surface Temperature (psia):	0.2111	0.2294	0.2805	0.3346	0.3929	0.4471	0.4654	0.4482	0.3938	0.3197	0.2647	0.2241
Vapor Pressure at Daily Minimum Liquid Surface Temperature (psia):	0.1737	0.1821	0.2114	0.2396	0.2737	0.3092	0.3292	0.3235	0.2918	0.2428	0.2136	0.1871
Vapor Pressure at Daily Maximum Liquid Surface Temperature (psia):	0.2555	0.2877	0.3693	0.4619	0.5565	0.6373	0.6487	0.6139	0.5266	0.4179	0.3266	0.2675
Daily Avg. Liquid Surface Temp. (deg R):	508.5095	510.8624	516.9429	522.2886	527.2494	531.3037	532.5737	531.3788	527.3254	520.9055	515.2035	510.2689
Daily Min. Liquid Surface Temp. (deg R):	502.8573	504.2203	508.5588	512.2432	516.2002	519.8876	521.7958	521.2654	518.1329	512.6314	508.8570	505.0141
Daily Max. Liquid Surface Temp. (deg R):	514.1517	517.7044	525.3271	532.3339	538.2986	542.7198	543.3515	541.1922	536.5179	529.1795	521.5500	515.5237
Daily Ambient Temp. Range (deg. R):	18.2000	19.6000	21.7000	24.0000	24.0000	23.3000	21.3000	21.0000	22.3000	24.0000	21.0000	18.0000
Vented Vapor Saturation Factor												
Vented Vapor Saturation Factor:	0.9546	0.9509	0.9406	0.9299	0.9187	0.9085	0.9051	0.9083	0.9185	0.9328	0.9437	0.9519
Vapor Pressure at Daily Average Liquid:												
Surface Temperature (psia):	0.2111	0.2294	0.2805	0.3346	0.3929	0.4471	0.4654	0.4482	0.3938	0.3197	0.2647	0.2241
Vapor Space Outage (ft):	4.2500	4.2500	4.2500	4.2500	4.2500	4.2500	4.2500	4.2500	4.2500	4.2500	4.2500	4.2500
Working Losses (lb):	24.4548	26.2882	31.3026	36.5143	42.0509	47.1342	46.8381	47.2334	42.1413	35.0945	29.7602	25.7574
Vapor Molecular Weight (lb/lb-mole):	28.9541	28.6297	27.8656	27.2734	26.7465	26.3434	26.2220	26.3362	26.7387	27.4272	28.0954	28.7203
Vapor Pressure at Daily Average Liquid Surface Temperature (psia):	0.2111	0.2294	0.2805	0.3346	0.3929	0.4471	0.4654	0.4482	0.3938	0.3197	0.2647	0.2241
Net Throughput (gal/mo.):	753,469.5000	753,469.5000	753,469.5000	753,469.5000	753,469.5000	753,469.5000	753,469.5000	753,469.5000	753,469.5000	753,469.5000	753,469.5000	753,469.5000
Annual Turnovers:	531.8608	531.8608	531.8608	531.8608	531.8608	531.8608	531.8608	531.8608	531.8608	531.8608	531.8608	531.8608
Turnover Factor:	0.2231	0.2231	0.2231	0.2231	0.2231	0.2231	0.2231	0.2231	0.2231	0.2231	0.2231	0.2231
Tank Diameter (ft):	8.5000	8.5000	8.5000	8.5000	8.5000	8.5000	8.5000	8.5000	8.5000	8.5000	8.5000	8.5000
Working Loss Product Factor:	1.0000	1.0000	1.0000	1.0000	1.0000	1.0000	1.0000	1.0000	1.0000	1.0000	1.0000	1.0000
Total Losses (lb):	26.9307	29.1950	36.1090	43.0585	50.6451	56.7831	56.5675	56.0316	49.0087	40.3923	33.0467	28.1634

TANKS 4.0.9d
Emissions Report - Detail Format
Individual Tank Emission Totals

Emissions Report for: Annual

FT 1 - Horizontal Tank
West Virginia, Ohio

	Losses(lbs)		
Components	Working Loss	Breathing Loss	Total Emissions
100,000ppm VOC (10%) HEP Shalewater	436.57	71.36	507.93
Benzene	2.93	0.48	3.41
Ethylbenzene	0.28	0.05	0.33
Gasoline (RVP 6)	194.90	31.40	226.30
Toluene	0.84	0.14	0.98
Water	237.39	39.26	276.65
Xylenes (mixed isomers)	0.23	0.04	0.27

TANKS 4.0.9d
Emissions Report - Detail Format
Tank Indentification and Physical Characteristics

Identification

User Identification:	Brine Mixing Tank
City:	Charleston
State:	West Virginia
Company:	HEP Shalewater Solutions, LLC.
Type of Tank:	Horizontal Tank
Description:	1 - 90bbl Brine Mixing Tank

Tank Dimensions

Shell Length (ft):	10.00
Diameter (ft):	7.00
Volume (gallons):	3,000.00
Turnovers:	120.00
Net Throughput(gal/yr):	360,000.00
Is Tank Heated (y/n):	N
Is Tank Underground (y/n):	N

Paint Characteristics

Shell Color/Shade:	White/White
Shell Condition	Good

Breather Vent Settings

Vacuum Settings (psig):	0.00
Pressure Settings (psig)	0.00

Meterological Data used in Emissions Calculations: Charleston, West Virginia (Avg Atmospheric Pressure = 14.25 psia)

TANKS 4.0.9d
Emissions Report - Detail Format
Liquid Contents of Storage Tank

Brine Mixing Tank - Horizontal Tank
Charleston, West Virginia

Mixture/Component	Month	Daily Liquid Surf. Temperature (deg F) Avg.	Min.	Max.	Liquid Bulk Temp (deg F)	Vapor Pressure (psia) Avg.	Min.	Max.	Vapor Mol. Weight.	Liquid Mass Fract.	Vapor Mass Fract.	Mol. Weight	Basis for Vapor Pressure Calculations
100,000 ppm VOC	All	56.67	51.31	62.04	55.00	0.2750	0.2296	0.3283	27.9572			19.59	
Benzene						1.0642	0.9131	1.2354	78.1100	0.0025	0.0058	**78.11**	Option 2: A=6.905, B=1211.033, C=220.79
Ethylbenzene						0.0966	0.0797	0.1165	106.1700	0.0025	0.0006	106.17	Option 2: A=6.975, B=1424.255, C=213.21
Gasoline (RVP 6)						2.7373	2.4420	3.0611	60.0000	**0.0900**	0.4709	92.00	Option 4: RVP=6, ASTM Slope=3
Toluene						0.2974	0.2504	0.3517	92.1300	0.0025	0.0019	92.13	Option 2: A=6.954, B=1344.8, C=219.48
Water						0.2264	0.1860	0.2744	18.0150	0.9000	0.5193	18.02	Option 2: A=8.07131, B=1730.63, C=233.426
Xylenes (mixed isomers)						**0.0803**	0.0662	0.0971	106.1700	0.0025	0.0005	106.17	Option 2: A=7.009, B=1462.266, C=215.11

TANKS 4.0.9d
Emissions Report - Detail Format
Detail Calculations (AP-42)

Brine Mixing Tank - Horizontal Tank
Charleston, West Virginia

Annual Emission Calculations	
Standing Losses (lb):	5.7416
Vapor Space Volume (cu ft):	245.1243
Vapor Density (lb/cu ft):	0.0014
Vapor Space Expansion Factor:	0.0486
Vented Vapor Saturation Factor:	0.9515
Tank Vapor Space Volume:	
Vapor Space Volume (cu ft):	245.1243
Tank Diameter (ft):	7.0000
Effective Diameter (ft):	9.4431
Vapor Space Outage (ft):	3.5000
Tank Shell Length (ft):	10.0000
Vapor Density	
Vapor Density (lb/cu ft):	0.0014
Vapor Molecular Weight (lb/lb-mole):	27.9572
Vapor Pressure at Daily Average Liquid Surface Temperature (psia):	0.2750
Daily Avg. Liquid Surface Temp. (deg. R):	516.3441
Daily Average Ambient Temp. (deg. F):	54.9833
Ideal Gas Constant R (psia cuft / (lb-mol-deg R)):	10.731
Liquid Bulk Temperature (deg. R):	514.6733
Tank Paint Solar Absorptance (Shell):	0.1700
Daily Total Solar Insulation Factor (Btu/sqft day):	1,250.5726
Vapor Space Expansion Factor	
Vapor Space Expansion Factor:	0.0486
Daily Vapor Temperature Range (deg. R):	21.4567
Daily Vapor Pressure Range (psia):	0.0987
Breather Vent Press. Setting Range(psia):	0.0000
Vapor Pressure at Daily Average Liquid Surface Temperature (psia):	0.2750
Vapor Pressure at Daily Minimum Liquid Surface Temperature (psia):	0.2296
Vapor Pressure at Daily Maximum Liquid Surface Temperature (psia):	0.3283
Daily Avg. Liquid Surface Temp. (deg R):	516.3441
Daily Min. Liquid Surface Temp. (deg R):	510.9799
Daily Max. Liquid Surface Temp. (deg R):	521.7082
Daily Ambient Temp. Range (deg. R):	21.5333
Vented Vapor Saturation Factor	
Vented Vapor Saturation Factor:	0.9515
Vapor Pressure at Daily Average Liquid: Surface Temperature (psia):	0.2750
Vapor Space Outage (ft):	3.5000
Working Losses (lb):	27.4545
Vapor Molecular Weight (lb/lb-mole):	27.9572
Vapor Pressure at Daily Average Liquid Surface Temperature (psia):	0.2750
Annual Net Throughput (gal/yr.):	360,000.0000
Annual Turnovers:	120.0000
Turnover Factor:	0.4167
Tank Diameter (ft):	7.0000
Working Loss Product Factor:	1.0000
Total Losses (lb):	33.1961

TANKS 4.0.9d
Emissions Report - Detail Format
Individual Tank Emission Totals

Emissions Report for: Annual

Brine Mixing Tank - Horizontal Tank
Charleston, West Virginia

	Losses(lbs)		
Components	Working Loss	Breathing Loss	Total Emissions
100,000 ppm VOC	27.45	5.74	33.20
Water	14.26	2.98	17.24
Benzene	0.19	0.04	0.23
Ethylbenzene	0.02	0.00	0.02
Toluene	0.05	0.01	0.06
Xylenes (mixed isomers)	0.01	0.00	0.02
Gasoline (RVP 6)	12.93	2.70	15.63

HILLSTONE ENVIRONMENTAL

Date	Project	Location	Document #
04/22/2016	Water Monitoring Plan	Central Station, WV	HEPSWS042216CS

Introduction

The purpose of this document is to establish a procedure for the collection and analysis of sample data to verify complince with our air quality permit. Central Station is a ZLD water recycling facility. The facility shall receive various influents relating to oil and gas operations. Water will be offloaded into a bank of closed top frac tanks manifolded together to promote equalization. The influent battery is pumped to the treatment process which consists of a treatment trailer, weir and settling tanks. Once treated the water flows by gravity to the effluent battery. Trucks will hook to the effluent manifold and take the water away for recycling in subsequent completions operations.

Sampling Approach

Water

A triage sample will be collected from each inbound truck and out of specification material will be rejected prior to offload. Triage data for trucks approved for offload will be recorded on the manifest forms. For more information about the acceptance process refer to the document entitled "Water Acceptance Procedure".

In addition, periodic water samples will be collected at a proposed frequency of every two weeks and will be analyzed by a third party WV certified NELAC accredited laboratory. Samples will be collected from the valve on the water transfer pump located between the influent battery upstream of the treatment process. In order to maintain data comparability, it is essential that the sample be collected from the same location every time.

When the equalized influent water is subject to the centrifugal forces of the pump any organics present will be homogenized through the cross sectional column of water within the transfer pipe. By collecting the sample at this location we ensure a representative contribution of non-soluble organics (if present). Routine sample collection prior to treatment ensures a conservative accounting as some VOC's and HAP's will settle out in the sludge during the treatment process.

Sludge

Within a month of operation treatment sludge will be dewatered by the onsite plate and frame press and this material will require waste profiling for disposal purposes. During the initial filter cake waste profiling event, as well as all subsequent waste profiling sampling events, a composite sample of the sludge will be collected and analyzed by a third party WV certified NELAC accredited laboratory for total VOC's and SVOC's.

Ambient Air

Within the first six months of operation, and every six months thereafter, ambient air samples will be collected to determine VOC, SVOC and PM10 levels. Fugitive dust will be determined gravimetrically and will be determined by an AIHA accredited third party laboratory.

It will be necessary to also analyze a background sample for ambient air parameters to establish background conditions.

SHALEWATER
SOLUTIONS

Sample Analysis

Water and dewatered cake samples will be analyzed for volatile organic compounds by Method SW-846 8260 and for semivolatile organic compounds by Method SW-846 8270 respectively. Representative samples shall be collected in precleaned glassware provided by the laboratory. Water samples shall be collected in HCl preserved 40mL voa vials with septa for 8260 analysis. Samples collected for VOC analysis shall contain no headspace. Water samples for 8270 analysis shall be collected in one liter unpreserved amber glass bottles. Composite samples of the filtercake shall be collected in 4 oz and 8 oz glass jars for 8260 and 8270 analysis respectively. Once collected the samples shall be preserved on ice and transferred under chain of custody to the laboratory for analysis.

Ambient air samples shall be collected over an eight hour period into 6L SUMA canisters equipped with a regulator and analyzed by a third party NELAC accredited laboratory. A one hour grab sample may also be collected into a 1L SUMA canister. The ambient air will be analyzed by gas chromatography equipped with mass spectra (GC-MS) detectors in accordance with EPA Method TO-15.

In order to identify and quantitie any contaminants present the VOC and SVOC samples shall be analyzed for the target compound list (TCL) and shall also include a tentatively identified compound (TIC) scan.

Particulate concentrations shall be determined gravimetrically by NIOSH Methods 0500 and 0600 respectively. The cassette will be equipped with a cyclone to provide the appropriate particle size cut to determine the PM10 fraction.

Record Keeping

Hard copies of the reports shall be maintained on site and available for review by the WVDEP.

Please feel free to contact me at (724) 289-7475 if you have any question or concerns about any of the data contained in this report.

Sincerely,

Ryan Hall
Technical Director
Shalewater Solutions

Attachments;
Sample Location Map
Chain of Custody
Laboratory Certifications

Sample Location Map

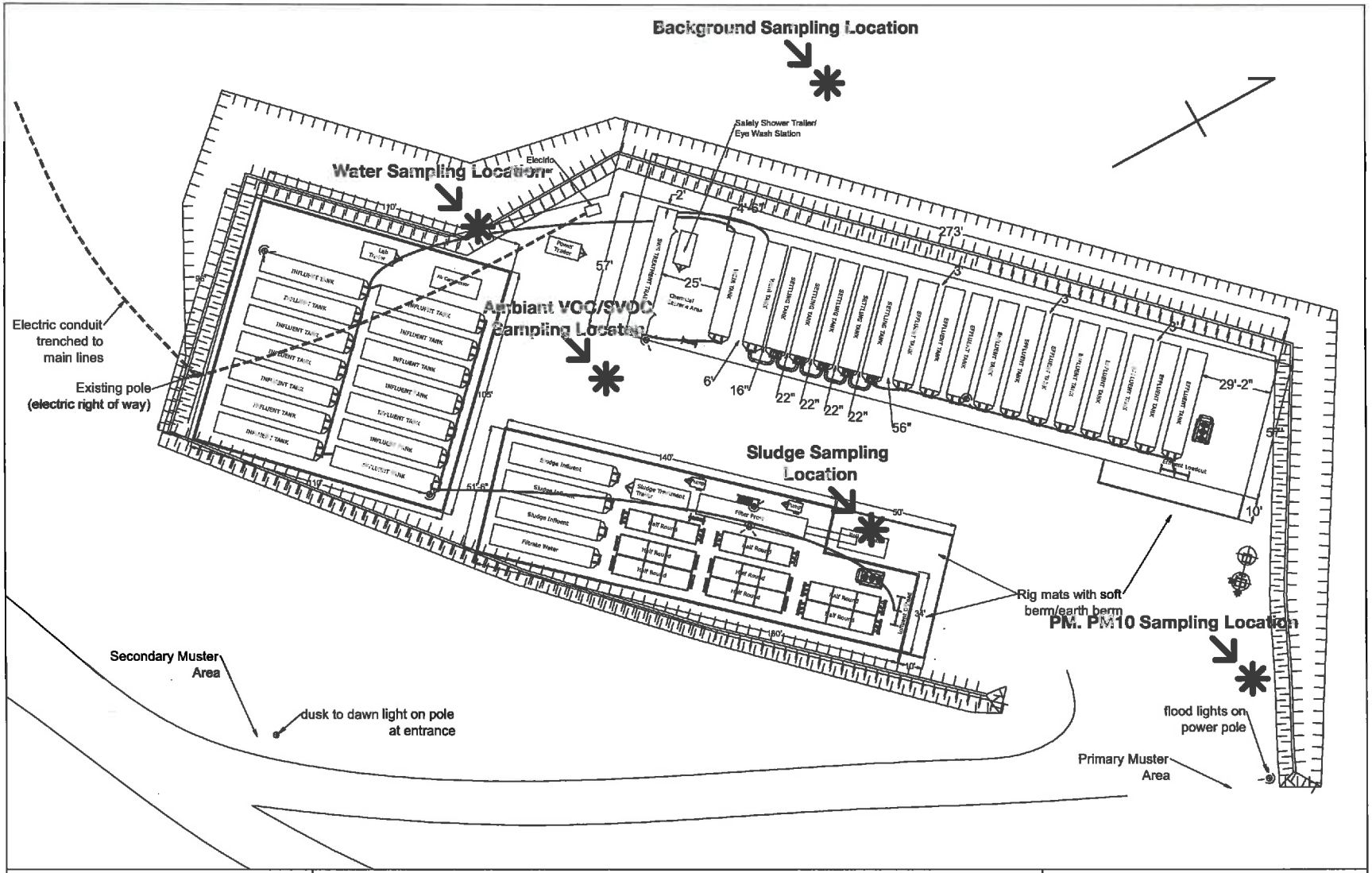

Shalewater Solutions
Central Station Treated Layout

SCALE:	DRAWN BY:	CHK BY:	APPRVD. BY:
NONE	J. LAFFERRE		

PLOT DATE: 21 MARCH 2016 - 9:15 AM

FILE NAME: D:\Documents\Documents\Cad Stuff\Central Station\Central Station SWS treatment site_recover000_recover.dwg

SHALEWATER SOLUTIONS

37 GRAND MEADOWS DR.
STE 201
BRIDGEPORT, WV 26330

PH: 304.592.2794
WWW.SHALEWATER.COM

PROJECT COC

TestAmerica Pittsburgh
301 Alpha Drive
RIDC Park
Pittsburgh, PA 15238-2907
phone 412.963.7058 fax 412.963.2468

Chain of Custody Record

TestAmerica
THE LEADER IN ENVIRONMENTAL TESTING

TestAmerica Laboratories, Inc.

Regulatory Program: ☐ DW ☐ NPDES ☐ RCRA ☑ Other:

Client Contact	Project Manager: Ryan Hall	Site Contact:	Date:	COC No:
HEP Shalewater Solutions	Email: rhall@shalewater.com	Lab Contact:	Carrier:	____ of ____ COCs
37 Grande Meadows Drive	**Analysis Turnaround Time**			Sampler:
Bridgeport WV, 26330	☐ CALENDAR DAYS ☐ WORKING DAYS			**For Lab Use Only:**
(304) 592-2794 Office	TAT if different from Below _____			Walk-in Client:
(724) 289-7475 Cell	☐ 2 weeks			Lab Sampling:
Project Name: Central Station Air Monitoring	☐ 1 week			
Site: Central Station ZLD Recyling Facility	☐ 2 days			Job / SDG No.:
P O #	☐ 1 day			

Sample Identification	Sample Date	Sample Time	Sample Type (C=Comp, G=Grab)	Matrix	# of Cont.	Filtered Sample (Y / N)	Perform MS / MSD (Y / N)	8260 TCL List and TICS, 8270 TCL	8260 TCL List and TICS, 8270 TCL	TO-15 and TICS	NIOSH 0500, NIOSH 0600	Sample Specific Notes:
Central Station Water			C	Aq	5	N		X				Analyzed in TA Pittsburgh
Central Station Filtercake			C	Soil	2	N			X			Analyzed in TA Pittsburgh
Central Station Ambiant Air			C	Air	1					X		Analyzed in TA Burlington
Central Station Ambiant Air Background			C	Air	1					X		Analyzed in TA Burlington
Central Station Ambient Air Filtercake			C	Air	1					X		Analyzed in TA Burlington
Central Station PM			C	Air	2						X	Analyzed by RJ Lee Group
Central Station PM Background			C	Air	2						X	Analyzed by RJ Lee Group

Preservation Used: 1= Ice, 2= HCl; 3= H2SO4; 4=HNO3; 5=NaOH; 6= Other

Possible Hazard Identification:
Are any samples from a listed EPA Hazardous Waste? Please List any EPA Waste Codes for the sample in the Comments Section if the lab is to dispose of the sample.

☑ Non-Hazard ☐ Flammable ☐ Skin Irritant ☐ Poison B ☐ Unknown

Sample Disposal (A fee may be assessed if samples are retained longer than 1 month)

☐ Return to Client ☑ Disposal by Lab ☐ Archive for ____ Months

Special Instructions/QC Requirements & Comments:

Custody Seals Intact: ☐ Yes ☐ No | Custody Seal No.: | Cooler Temp. (°C): Obs'd:_____ Corr'd:_____ Therm ID No.:_____

Relinquished by:	Company:	Date/Time:	Received by:	Company:	Date/Time:
Relinquished by:	Company:	Date/Time:	Received by:	Company:	Date/Time:
Relinquished by:	Company:	Date/Time:	Received in Laboratory by:	Company:	Date/Time:

LABORATORY CERTIFICATIONS

Attachment I

WEST VIRGINIA
DEPARTMENT OF ENVIRONMENTAL PROTECTION
DIVISION OF WATER AND WASTE MANAGEMENT

List of Certified Parameters
for

TESTAMERICA LABORATORIES, INC.
PITTSBURGH
PITTSBURGH, PENNSYLVANIA

PARAMETERS CERTIFIED

NONPOTABLE WATER INORGANIC NONMETALS

ANALYTE	METHOD	TECHNOLOGY
Acidity	SM2310 B-11	Titrimetric
Alkalinity	SM2320 B-11	Titrimetric
Ammonia	EPA350.1 Rev 2.0-1993	Spectrophotometric
Bromide	EPA300.0 Rev 2.1-1993	IC
Bromide	SW9056A	IC
Carbon, Total Organic (TOC)	SM5310 C-11	Oxidation
Carbon, Total Organic (TOC)	SW9060A	Combustion
Chloride	EPA300.0 Rev 2.1-1993	IC
Chloride	SW9056A	IC
Chlorine, Residual	SM4500-Cl G-11	Spectrophotometric
Chromium, Hexavalent	SM3500-Cr B-11	Spectrophotometric
Chromium, Hexavalent	SW3060A	Digestion
Chromium, Hexavalent	SW7196A	Spectrophotometric
Color	SM2120 B-11	Spectrophotometric
Conductance, Specific	EPA120.1 Rev 1982	Probe
Conductance, Specific	SM2510 B-11	Probe
Conductance, Specific	SW9050A	Probe
Cyanide, Available	OIA-1677	FI/LE
Cyanide, Total	EPA335.4 Rev 1.0-1993	Spectrophotometric
Cyanide, Total	SW9010C	Distillation
Cyanide, Total	SW9012B	Spectrophotometric
Cyanide, Total	SW9014	Titrimetric
Fluoride	EPA300.0 Rev 2.1-1993	IC
Fluoride	SW9056A	IC
Hardness, Total	SM2340 B-11	Calculation
Hardness, Total	SM2340 C-11	Titrimetric
Nitrate	EPA300.0 Rev 2.1-1993	IC
Nitrate	SW9056A	IC
Nitrate-Nitrite	EPA353.2 Rev 2.0-1993	Spectrophotometric

Nitrite	EPA300.0 Rev 2.1-1993	IC
Nitrite	SW9056A	IC
Oil & Grease	EPA1664 A	Gravimetric
Oil & Grease	EPA1664 B	Gravimetric
Oxygen Demand, Biochemical (BOD)	SM5210 B-11	Probe
Oxygen Demand, Carbonaceous Biochemical (CBOD)	SM5210 B-11	Probe
Oxygen Demand, Chemical (COD)	EPA410.4 Rev 2.0-1993	Spectrophotometric
Oxygen, Dissolved	SM4500-O G-11	Probe
pH (Hydrogen Ion)	SM4500-H B-11	Electrode
Phenolics, Total	EPA420.4 Rev 1.0-1993	Spectrophotometric
Phenolics, Total	SW9066	Spectrophotometric
Phosphorus, Ortho	EPA300.0 Rev 2.1-1993	IC
Phosphorus, Ortho	SW9056A	IC
Solids, Dissolved	SM2540 C-11	Gravimetric
Solids, Settleable	SM2540 F-11	Imhoff
Solids, Suspended	SM2540 D-11	Gravimetric
Solids, Total	SM2540 B-11	Gravimetric
Sulfate	EPA300.0 Rev 2.1-1993	IC
Sulfate	SW9056A	IC
Sulfide	SM4500-S F-11	Titrimetric
Sulfide	SW9034	Titrimetric
Surfactants (MBAS)	SM5540 C-11	Spectrophotometric
Turbidity	EPA180.1 Rev 2.0-1993	Turbidimetric

NONPOTABLE WATER TRACE METALS

METAL	METHOD	TECHNOLOGY
Aluminum	EPA200.7 Rev 4.4-1994	ICP
Aluminum	EPA200.8 Rev 5.4-1994	ICP-MS
Aluminum	SW6010B	ICP
Aluminum	SW6010C	ICP
Aluminum	SW6020	ICP-MS
Aluminum	SW6020A	ICP-MS
Antimony	EPA200.7 Rev 4.4-1994	ICP
Antimony	EPA200.8 Rev 5.4-1994	ICP-MS
Antimony	SW6010B	ICP
Antimony	SW6010C	ICP
Antimony	SW6020	ICP-MS
Antimony	SW6020A	ICP-MS
Arsenic	EPA200.7 Rev 4.4-1994	ICP
Arsenic	EPA200.8 Rev 5.4-1994	ICP-MS
Arsenic	SW6010B	ICP
Arsenic	SW6010C	ICP
Arsenic	SW6020	ICP-MS
Arsenic	SW6020A	ICP-MS
Barium	EPA200.7 Rev 4.4-1994	ICP
Barium	EPA200.8 Rev 5.4-1994	ICP-MS
Barium	SW6010B	ICP
Barium	SW6010C	ICP
Barium	SW6020	ICP-MS
Barium	SW6020A	ICP-MS

Beryllium	EPA200.7 Rev 4.4-1994	ICP
Beryllium	EPA200.8 Rev 5.4-1994	ICP-MS
Beryllium	SW6010B	ICP
Beryllium	SW6010C	ICP
Beryllium	SW6020	ICP-MS
Beryllium	SW6020A	ICP-MS
Boron	EPA200.7 Rev 4.4-1994	ICP
Boron	EPA200.8 Rev 5.4-1994	ICP-MS
Boron	SW6010B	ICP
Boron	SW6010C	ICP
Boron	SW6020	ICP-MS
Boron	SW6020A	ICP-MS
Cadmium	EPA200.7 Rev 4.4-1994	ICP
Cadmium	EPA200.8 Rev 5.4-1994	ICP-MS
Cadmium	SW6010B	ICP
Cadmium	SW6010C	ICP
Cadmium	SW6020	ICP-MS
Cadmium	SW6020A	ICP-MS
Calcium	EPA200.7 Rev 4.4-1994	ICP
Calcium	EPA200.8 Rev 5.4-1994	ICP-MS
Calcium	SW6010B	ICP
Calcium	SW6010C	ICP
Calcium	SW6020	ICP-MS
Calcium	SW6020A	ICP-MS
Chromium	EPA200.7 Rev 4.4-1994	ICP
Chromium	EPA200.8 Rev 5.4-1994	ICP-MS
Chromium	SW6010B	ICP
Chromium	SW6010C	ICP
Chromium	SW6020	ICP-MS
Chromium	SW6020A	ICP-MS
Cobalt	EPA200.7 Rev 4.4-1994	ICP
Cobalt	EPA200.8 Rev 5.4-1994	ICP-MS
Cobalt	SW6010B	ICP
Cobalt	SW6010C	ICP
Cobalt	SW6020	ICP-MS
Cobalt	SW6020A	ICP-MS
Copper	EPA200.7 Rev 4.4-1994	ICP
Copper	EPA200.8 Rev 5.4-1994	ICP-MS
Copper	SW6010B	ICP
Copper	SW6010C	ICP
Copper	SW6020	ICP-MS
Copper	SW6020A	ICP-MS
Iron	EPA200.7 Rev 4.4-1994	ICP
Iron	EPA200.8 Rev 5.4-1994	ICP-MS
Iron	SW6010B	ICP
Iron	SW6010C	ICP
Iron	SW6020	ICP-MS
Iron	SW6020A	ICP-MS
Lead	EPA200.7 Rev 4.4-1994	ICP
Lead	EPA200.8 Rev 5.4-1994	ICP-MS
Lead	SW6010B	ICP
Lead	SW6010C	ICP
Lead	SW6020	ICP-MS

Lead	SW6020A	ICP-MS
Lithium	EPA200.7 Rev 4.4-1994	ICP
Lithium	SW6010B	ICP
Lithium	SW6010C	ICP
Magnesium	EPA200.7 Rev 4.4-1994	ICP
Magnesium	EPA200.8 Rev 5.4-1994	ICP-MS
Magnesium	SW6010B	ICP
Magnesium	SW6010C	ICP
Magnesium	SW6020	ICP-MS
Magnesium	SW6020A	ICP-MS
Manganese	EPA200.7 Rev 4.4-1994	ICP
Manganese	EPA200.8 Rev 5.4-1994	ICP-MS
Manganese	SW6010B	ICP
Manganese	SW6010C	ICP
Manganese	SW6020	ICP-MS
Manganese	SW6020A	ICP-MS
Mercury	EPA245.1 Rev 3.0-1994	CVAA
Mercury	SW7470A	CVAA
Metals, Total	SW3005A	Digestion
Metals, Total	SW3010A	Digestion
Molybdenum	EPA200.7 Rev 4.4-1994	ICP
Molybdenum	EPA200.8 Rev 5.4-1994	ICP-MS
Molybdenum	SW6010B	ICP
Molybdenum	SW6010C	ICP
Molybdenum	SW6020	ICP-MS
Molybdenum	SW6020A	ICP-MS
Nickel	EPA200.7 Rev 4.4-1994	ICP
Nickel	EPA200.8 Rev 5.4-1994	ICP-MS
Nickel	SW6010B	ICP
Nickel	SW6010C	ICP
Nickel	SW6020	ICP-MS
Nickel	SW6020A	ICP-MS
Phosphorus	EPA200.8 Rev 5.4-1994	ICP-MS
Phosphorus	SW6020	ICP-MS
Phosphorus	SW6020A	ICP-MS
Potassium	EPA200.7 Rev 4.4-1994	ICP
Potassium	EPA200.8 Rev 5.4-1994	ICP-MS
Potassium	SW6010B	ICP
Potassium	SW6010C	ICP
Potassium	SW6020	ICP-MS
Potassium	SW6020A	ICP-MS
Selenium	EPA200.7 Rev 4.4-1994	ICP
Selenium	EPA200.8 Rev 5.4-1994	ICP-MS
Selenium	SW6010B	ICP
Selenium	SW6010C	ICP
Selenium	SW6020	ICP-MS
Selenium	SW6020A	ICP-MS
Silica	EPA200.7 Rev 4.4-1994	Calculation
Silica	EPA200.8 Rev 5.4-1994	Calculation
Silica	SW6010B	Calculation
Silica	SW6010C	Calculation
Silica	SW6020	Calculation
Silica	SW6020A	Calculation

Silicon	EPA200.7 Rev 4.4-1994	ICP
Silicon	EPA200.8 Rev 5.4-1994	ICP-MS
Silicon	SW6010B	ICP
Silicon	SW6010C	ICP
Silicon	SW6020	ICP-MS
Silicon	SW6020A	ICP-MS
Silver	EPA200.7 Rev 4.4-1994	ICP
Silver	EPA200.8 Rev 5.4-1994	ICP-MS
Silver	SW6010B	ICP
Silver	SW6010C	ICP
Silver	SW6020	ICP-MS
Silver	SW6020A	ICP-MS
Sodium	EPA200.7 Rev 4.4-1994	ICP
Sodium	EPA200.8 Rev 5.4-1994	ICP-MS
Sodium	SW6010B	ICP
Sodium	SW6010C	ICP
Sodium	SW6020	ICP-MS
Sodium	SW6020A	ICP-MS
Strontium	EPA200.7 Rev 4.4-1994	ICP
Strontium	EPA200.8 Rev 5.4-1994	ICP-MS
Strontium	SW6010B	ICP
Strontium	SW6010C	ICP
Strontium	SW6020	ICP-MS
Strontium	SW6020A	ICP-MS
Thallium	EPA200.7 Rev 4.4-1994	ICP
Thallium	EPA200.8 Rev 5.4-1994	ICP-MS
Thallium	SW6010B	ICP
Thallium	SW6010C	ICP
Thallium	SW6020	ICP-MS
Thallium	SW6020A	ICP-MS
Tin	EPA200.7 Rev 4.4-1994	ICP
Tin	EPA200.8 Rev 5.4-1994	ICP-MS
Tin	SW6010B	ICP
Tin	SW6010C	ICP
Tin	SW6020	ICP-MS
Tin	SW6020A	ICP-MS
Titanium	EPA200.7 Rev 4.4-1994	ICP
Titanium	EPA200.8 Rev 5.4-1994	ICP-MS
Titanium	SW6010B	ICP
Titanium	SW6010C	ICP
Titanium	SW6020	ICP-MS
Titanium	SW6020A	ICP-MS
Vanadium	EPA200.7 Rev 4.4-1994	ICP
Vanadium	EPA200.8 Rev 5.4-1994	ICP-MS
Vanadium	SW6010B	ICP
Vanadium	SW6010C	ICP
Vanadium	SW6020	ICP-MS
Vanadium	SW6020A	ICP-MS
Zinc	EPA200.7 Rev 4.4-1994	ICP
Zinc	EPA200.8 Rev 5.4-1994	ICP-MS
Zinc	SW6010B	ICP
Zinc	SW6010C	ICP
Zinc	SW6020	ICP-MS

Zinc	SW6020A	ICP-MS

NONPOTABLE WATER MICROBIOLOGY

GROUP	METHOD	TECHNOLOGY
Coliform, Total (P/A)	SM9223 B-04	P/A
E. Coli (MPN)	SM9223 B-04	Multiple Tube

NONPOTABLE WATER VOLATILE ORGANIC CHEMICALS

GROUP	METHOD	TECHNOLOGY
Closed System Purge & Trap	SW5035A	Extraction
Purge & Trap For Aqueous Samples	SW5030B	Extraction
Purgeables	EPA624	GC/MS
Volatile Organic Compounds	SW8260B	GC/MS
Volatile Organic Compounds	SW8260C	GC/MS

NONPOTABLE WATER EXTRACTABLE AND SEMI-VOLATILE ORGANIC CHEMICALS

GROUP	METHOD	TECHNOLOGY
Base/Neutrals & Acids	EPA625	GC/MS
Chlorinated Herbicides	SW8151A	GC
Cleanup	SW3600C	Cleanup
Continuous Liquid-Liquid	SW3520C	Extraction
EDB & DBCP	SW8011	GC/ECD
Florisil Cleanup	SW3620C	Cleanup
Gel-Permeation Cleanup	SW3640A	Cleanup
Organic Extraction & Sample Preparatic	SW3500C	Extraction
Organochlorine Pesticides	SW8081A	GC
Organochlorine Pesticides	SW8081B	GC
Organochlorine Pesticides & PCBs	EPA608	GC
Organophosphorus Compounds	SW8141A	GC
Organophosphorus Compounds	SW8141B	GC
Polychlorinated Biphenyls	SW8082	GC
Polychlorinated Biphenyls	SW8082A	GC
Semivolatile Organic Compounds	SW8270C	GC/MS
Semivolatile Organic Compounds	SW8270D	GC/MS
Separatory Funnel Liquid-Liquid	SW3510C	Extraction
Sulfur Cleanup	SW3660B	Cleanup
Sulfuric Acid/Permanganate Cleanup	SW3665A	Cleanup

HAZARDOUS WASTE CHARACTERISTICS

PROCEDURE	METHOD	TECHNOLOGY
Corrosivity	SW9040C	Electrode
Corrosivity	SW9045D	Electrode
EP Tox- Metals & Organics	SW1310A	Extraction
Ignitability	SW1010A	Closed Cup
Paint Filter Test	SW9095B	Gravimetric

SPLP- Metals & Organics	SW1312	Extraction
TCLP- Metals & Organics	SW1311	Extraction

SOLID AND CHEMICAL INORGANIC NONMETALS

ANALYTE	METHOD	TECHNOLOGY
18 II DI Leachate	ASTM D3987-85	Extraction
Ammonia	EPA350.1 Rev 2.0-1993	Spectrophotometric
Bromide	SW9056A	IC
Carbon, Total Organic (TOC)	Lloyd Kahn	Combustion IR
Chloride	SW9056A	IC
Chromium, Hexavalent	SW7196	Spectrophotometric
Cyanide, Total	SW9010C	Distillation
Cyanide, Total	SW9012B	Spectrophotometric
Cyanide, Total	SW9013A	Extraction
Cyanide, Total	SW9014	Spectrophotometric
Fluoride	SW9056A	IC
Nitrate	SW9056A	IC
Oil & Grease	SW9071B	Gravimetric
pH (Hydrogen Ion)	SW9040C	Electrode
pH (Hydrogen Ion)	SW9045D	Electrode
Phenolics, Total	SW9066	Colorimetric
Phosphorus, Ortho	SW9056A	IC
Sulfate	SW9056A	IC

SOLID AND CHEMICAL TRACE METALS

METAL	METHOD	TECHNOLOGY
Aluminum	SW6010B	ICP
Aluminum	SW6010C	ICP
Aluminum	SW6020	ICP-MS
Aluminum	SW6020A	ICP-MS
Antimony	SW6010B	ICP
Antimony	SW6010C	ICP
Antimony	SW6020	ICP-MS
Antimony	SW6020A	ICP-MS
Arsenic	SW6010B	ICP
Arsenic	SW6010C	ICP
Arsenic	SW6020	ICP-MS
Arsenic	SW6020A	ICP-MS
Barium	SW6010B	ICP
Barium	SW6010C	ICP
Barium	SW6020	ICP-MS
Barium	SW6020A	ICP-MS
Beryllium	SW6010B	ICP
Beryllium	SW6010C	ICP
Beryllium	SW6020	ICP-MS
Beryllium	SW6020A	ICP-MS
Boron	SW6010B	ICP
Boron	SW6010C	ICP
Boron	SW6020	ICP-MS

Boron	SW6020A	ICP-MS
Cadmium	SW6010B	ICP
Cadmium	SW6010C	ICP
Cadmium	SW6020	ICP-MS
Cadmium	SW6020A	ICP-MS
Calcium	SW6010B	ICP
Calcium	SW6010C	ICP
Calcium	SW6020	ICP-MS
Calcium	SW6020A	ICP-MS
Chromium	SW6010B	ICP
Chromium	SW6010C	ICP
Chromium	SW6020	ICP-MS
Chromium	SW6020A	ICP-MS
Cobalt	SW6010B	ICP
Cobalt	SW6010C	ICP
Cobalt	SW6020	ICP-MS
Cobalt	SW6020A	ICP-MS
Copper	SW6010B	ICP
Copper	SW6010C	ICP
Copper	SW6020	ICP-MS
Copper	SW6020A	ICP-MS
Iron	SW6010B	ICP
Iron	SW6010C	ICP
Iron	SW6020	ICP-MS
Iron	SW6020A	ICP-MS
Lead	SW6010B	ICP
Lead	SW6010C	ICP
Lead	SW6020	ICP-MS
Lead	SW6020A	ICP-MS
Lithium	SW6010B	ICP
Lithium	SW6010C	ICP
Magnesium	SW6010B	ICP
Magnesium	SW6010C	ICP
Magnesium	SW6020	ICP-MS
Magnesium	SW6020A	ICP-MS
Manganese	SW6010B	ICP
Manganese	SW6010C	ICP
Manganese	SW6020	ICP-MS
Manganese	SW6020A	ICP-MS
Mercury	SW7471A	CVAA
Mercury	SW7471B	CVAA
Metals, Total	SW3050B	Digestion
Molybdenum	SW6010B	ICP
Molybdenum	SW6010C	ICP
Molybdenum	SW6020	ICP-MS
Molybdenum	SW6020A	ICP-MS
Nickel	SW6010B	ICP
Nickel	SW6010C	ICP
Nickel	SW6020	ICP-MS
Nickel	SW6020A	ICP-MS
Phosphorus	SW6020	ICP-MS
Phosphorus	SW6020A	ICP-MS
Potassium	SW6010B	ICP

Potassium	SW6010C	ICP
Potassium	SW6020	ICP-MS
Potassium	SW6020A	ICP-MS
Selenium	SW6010B	ICP
Selenium	SW6010C	ICP
Selenium	SW6020	ICP-MS
Selenium	SW6020A	ICP-MS
Silica	SW6010B	Calculation
Silica	SW6010C	Calculation
Silicon	SW6010B	ICP
Silicon	SW6010C	ICP
Silicon	SW6020	ICP-MS
Silicon	SW6020A	ICP-MS
Silver	SW6010B	ICP
Silver	SW6010C	ICP
Silver	SW6020	ICP-MS
Silver	SW6020A	ICP-MS
Sodium	SW6010B	ICP
Sodium	SW6010C	ICP
Sodium	SW6020	ICP-MS
Sodium	SW6020A	ICP-MS
Strontium	SW6010B	ICP
Strontium	SW6010C	ICP
Strontium	SW6020	ICP-MS
Strontium	SW6020A	ICP-MS
Thallium	SW6010B	ICP
Thallium	SW6010C	ICP
Thallium	SW6020	ICP-MS
Thallium	SW6020A	ICP-MS
Tin	SW6010B	ICP
Tin	SW6010C	ICP
Tin	SW6020	ICP-MS
Tin	SW6020A	ICP-MS
Titanium	SW6010B	ICP
Titanium	SW6010C	ICP
Titanium	SW6020	ICP-MS
Titanium	SW6020A	ICP-MS
Vanadium	SW6010B	ICP
Vanadium	SW6010C	ICP
Vanadium	SW6020	ICP-MS
Vanadium	SW6020A	ICP-MS
Zinc	SW6010B	ICP
Zinc	SW6010C	ICP
Zinc	SW6020	ICP-MS
Zinc	SW6020A	ICP-MS

SOLID AND CHEMICAL VOLATILE ORGANIC CHEMICALS

GROUP	METHOD	TECHNOLOGY
Closed System Purge & Trap	SW5035	Extraction
Closed System Purge & Trap	SW5035A	Extraction
Volatile Organic Compounds	SW8260B	GC/MS

Volatile Organic Compounds	SW8260C	GC/MS
Waste Dilution for Volatile Organics	SW3585	Dilution

SOLID AND CHEMICAL EXTRACTABLE AND SEMI-VOLATILE ORGANIC CHEMICALS

GROUP	METHOD	TECHNOLOGY
Chlorinated Herbicides	SW8151A	GC/ECD
Cleanup	SW3600C	Cleanup
Florisil Cleanup	SW3620C	Cleanup
Gel-Permeation Cleanup	SW3640A	Cleanup
Organic Extraction & Sample Preparatic	SW3500C	Extraction
Organochlorine Pesticides	SW8081A	GC
Organochlorine Pesticides	SW8081B	GC
Organophosphorus Compounds	SW8141A	GC
Organophosphorus Compounds	SW8141B	GC
Polychlorinated Biphenyls	SW8082	GC
Polychlorinated Biphenyls	SW8082A	GC
Semivolatile Organic Compounds	SW8270C	GC/MS
Semivolatile Organic Compounds	SW8270D	GC/MS
Soxhlet, Automated	SW3541	Extraction
Sulfur Cleanup	SW3660B	Cleanup
Sulfuric Acid/Permanganate Cleanup	SW3665A	Cleanup
Waste Dilution	SW3580A	Dilution

This laboratory may test ONLY for those environmental parameters listed above for compliance reporting purposes. All testing must be by the test method cited in the current application for certification.

This Certification Expires January 31, 2017.

Certificate No 142

Issued on March 03, 2016

Linda Keller
Program Manager

NEW YORK STATE DEPARTMENT OF HEALTH
WADSWORTH CENTER

Expires 12:01 AM April 01, 2017
Issued April 01, 2016

CERTIFICATE OF APPROVAL FOR LABORATORY SERVICE

Issued in accordance with and pursuant to section 502 Public Health Law of New York State

MS. KRISTINE A. DUSABLON
TESTAMERICA LABORATORIES INC
30 COMMUNITY DRIVE SUITE #11
SOUTH BURLINGTON, VT 05403

NY Lab Id No: 10391

is hereby APPROVED as an Environmental Laboratory in conformance with the National Environmental Laboratory Accreditation Conference Standards (2003) for the category ENVIRONMENTAL ANALYSES NON POTABLE WATER
All approved analytes are listed below:

Acrylates	
Acrolein (Propenal)	EPA 8260C
Acrylonitrile	EPA 8260C
Ethyl methacrylate	EPA 8260C
Methyl acrylonitrile	EPA 8260C
Methyl methacrylate	EPA 8260C
Amines	
2-Nitroaniline	EPA 8270D
3-Nitroaniline	EPA 8270D
4-Chloroaniline	EPA 8270D
4-Nitroaniline	EPA 8270D
Aniline	EPA 8270D
Carbazole	EPA 8270D
Propionitrile	EPA 8260C
Pyridine	EPA 8270D
Benzidines	
3,3'-Dichlorobenzidine	EPA 8270D
Benzidine	EPA 8270D
Chlorinated Hydrocarbon Pesticides	
4,4'-DDD	EPA 8081B
4,4'-DDE	EPA 8081B
4,4'-DDT	EPA 8081B
Aldrin	EPA 8081B
alpha-BHC	EPA 8081B
alpha-Chlordane	EPA 8081B

Chlorinated Hydrocarbon Pesticides	
beta-BHC	EPA 8081B
Chlordane Total	EPA 8081B
delta-BHC	EPA 8081B
Dieldrin	EPA 8081B
Endosulfan I	EPA 8081B
Endosulfan II	EPA 8081B
Endosulfan sulfate	EPA 8081B
Endrin	EPA 8081B
Endrin aldehyde	EPA 8081B
Endrin Ketone	EPA 8081B
gamma-Chlordane	EPA 8081B
Heptachlor	EPA 8081B
Heptachlor epoxide	EPA 8081B
Lindane	EPA 8081B
Methoxychlor	EPA 8081B
Toxaphene	EPA 8081B
Chlorinated Hydrocarbons	
1,2,3-Trichlorobenzene	EPA 8260C
1,2,4,5-Tetrachlorobenzene	EPA 8270D
1,2,4-Trichlorobenzene	EPA 8270D
2-Chloronaphthalene	EPA 8270D
Hexachlorobenzene	EPA 8270D
Hexachlorobutadiene	EPA 8270D
Hexachlorocyclopentadiene	EPA 8270D
Hexachloroethane	EPA 8270D

Serial No.: 53897

Property of the New York State Department of Health. Certificates are valid only at the address shown, must be conspicuously posted, and are printed on secure paper. Continued accreditation depends on successful ongoing participation in the Program. Consumers are urged to call (518) 485-5570 to verify the laboratory's accreditation status.

NEW YORK STATE DEPARTMENT OF HEALTH
WADSWORTH CENTER

Expires 12:01 AM April 01, 2017
Issued April 01, 2016

CERTIFICATE OF APPROVAL FOR LABORATORY SERVICE

Issued in accordance with and pursuant to section 502 Public Health Law of New York State

MS. KRISTINE A. DUSABLON
TESTAMERICA LABORATORIES INC
30 COMMUNITY DRIVE SUITE #11
SOUTH BURLINGTON, VT 05403

NY Lab Id No: 10391

is hereby APPROVED as an Environmental Laboratory in conformance with the National Environmental Laboratory Accreditation Conference Standards (2003) for the category ENVIRONMENTAL ANALYSES NON POTABLE WATER
All approved analytes are listed below:

Fuel Oxygenates	
Methyl tert-butyl ether	EPA 8260C
tert-butyl alcohol	EPA 8260C
Haloethers	
4-Bromophenylphenyl ether	EPA 8270D
4-Chlorophenylphenyl ether	EPA 8270D
Bis(2-chloroethoxy)methane	EPA 8270D
Bis(2-chloroethyl)ether	EPA 8270D
Metals I	
Barium, Total	EPA 6010C
	EPA 6020A
Cadmium, Total	EPA 6010C
	EPA 6020A
Calcium, Total	EPA 6010C
Chromium, Total	EPA 6010C
	EPA 6020A
Copper, Total	EPA 6010C
	EPA 6020A
Iron, Total	EPA 6010C
	EPA 6020A
Lead, Total	EPA 6010C
	EPA 6020A
Magnesium, Total	EPA 6010C
Manganese, Total	EPA 6010C
	EPA 6020A
Nickel, Total	EPA 6010C
Metals I	
Nickel, Total	EPA 6020A
Potassium, Total	EPA 6010C
Silver, Total	EPA 6010C
	EPA 6020A
Sodium, Total	EPA 6010C
Strontium, Total	EPA 6010C
Metals II	
Aluminum, Total	EPA 6010C
	EPA 6020A
Antimony, Total	EPA 6010C
	EPA 6020A
Arsenic, Total	EPA 6010C
	EPA 6020A
Beryllium, Total	EPA 6010C
	EPA 6020A
Mercury, Total	EPA 7470A
Selenium, Total	EPA 6010C
	EPA 6020A
Vanadium, Total	EPA 6010C
	EPA 6020A
Zinc, Total	EPA 6010C
	EPA 6020A
Metals III	
Cobalt, Total	EPA 6010C
	EPA 6020A

Serial No.: 53897

Property of the New York State Department of Health. Certificates are valid only at the address shown, must be conspicuously posted, and are printed on secure paper. Continued accreditation depends on successful ongoing participation in the Program. Consumers are urged to call (518) 485-5570 to verify the laboratory's accreditation status.

NEW YORK STATE DEPARTMENT OF HEALTH
WADSWORTH CENTER

Expires 12:01 AM April 01, 2017
Issued April 01, 2016

CERTIFICATE OF APPROVAL FOR LABORATORY SERVICE

Issued in accordance with and pursuant to section 502 Public Health Law of New York State

MS. KRISTINE A. DUSABLON
TESTAMERICA LABORATORIES INC
30 COMMUNITY DRIVE SUITE #11
SOUTH BURLINGTON, VT 05403

NY Lab Id No: 10391

is hereby APPROVED as an Environmental Laboratory in conformance with the National Environmental Laboratory Accreditation Conference Standards (2003) for the category ENVIRONMENTAL ANALYSES NON POTABLE WATER
All approved analytes are listed below:

Metals III	
Molybdenum, Total	EPA 6010C
	EPA 6020A
Thallium, Total	EPA 6010C
	EPA 6020A
Tin, Total	EPA 6010C
Miscellaneous	
Cyanide, Total	EPA 9012B
Nitroaromatics and Isophorone	
1,3,5-Trinitrobenzene	EPA 8330B
1,3-Dinitrobenzene	EPA 8330B
2,4,6-Trinitrotoluene	EPA 8330B
2,4-Dinitrotoluene	EPA 8270D
	EPA 8330B
2,6-Dinitrotoluene	EPA 8270D
	EPA 8330B
2-Amino-4,6-dinitrotoluene	EPA 8330B
2-Nitrotoluene	EPA 8330B
3-Nitrotoluene	EPA 8330B
4-Amino-2,6-dinitrotoluene	EPA 8330B
4-Nitrotoluene	EPA 8330B
Hexahydro-1,3,5-trinitro-1,3,5-triazine	EPA 8330B
Isophorone	EPA 8270D
Methyl-2,4,6-trinitrophenylnitramine	EPA 8330B
Nitrobenzene	EPA 8270D
	EPA 8330B
Nitroaromatics and Isophorone	
Octahydro-tetranitro-tetrazocine	EPA 8330B
Nitrosoamines	
N-Nitrosodi-n-propylamine	EPA 8270D
Organophosphate Pesticides	
Atrazine	EPA 8270D
Petroleum Hydrocarbons	
Diesel Range Organics	EPA 8015D
Phthalate Esters	
Benzyl butyl phthalate	EPA 8270D
Bis(2-ethylhexyl) phthalate	EPA 8270D
Diethyl phthalate	EPA 8270D
Dimethyl phthalate	EPA 8270D
Di-n-butyl phthalate	EPA 8270D
Di-n-octyl phthalate	EPA 8270D
Polychlorinated Biphenyls	
PCB-1016	EPA 8082A
PCB-1221	EPA 8082A
PCB-1232	EPA 8082A
PCB-1242	EPA 8082A
PCB-1248	EPA 8082A
PCB-1254	EPA 8082A
PCB-1260	EPA 8082A
PCB-1262	EPA 8082A

Serial No.: 53897

Property of the New York State Department of Health. Certificates are valid only at the address shown, must be conspicuously posted, and are printed on secure paper. Continued accreditation depends on successful ongoing participation in the Program. Consumers are urged to call (518) 485-5570 to verify the laboratory's accreditation status.

NEW YORK STATE DEPARTMENT OF HEALTH
WADSWORTH CENTER

Expires 12:01 AM April 01, 2017
Issued April 01, 2016

CERTIFICATE OF APPROVAL FOR LABORATORY SERVICE

Issued in accordance with and pursuant to section 502 Public Health Law of New York State

MS. KRISTINE A. DUSABLON
TESTAMERICA LABORATORIES INC
30 COMMUNITY DRIVE SUITE #11
SOUTH BURLINGTON, VT 05403

NY Lab Id No: 10391

is hereby APPROVED as an Environmental Laboratory in conformance with the National Environmental Laboratory Accreditation Conference Standards (2003) for the category ENVIRONMENTAL ANALYSES NON POTABLE WATER
All approved analytes are listed below:

Polychlorinated Biphenyls	
PCB-1268	EPA 8082A
Polynuclear Aromatics	
Acenaphthene	EPA 8270D
Acenaphthylene	EPA 8270D
Anthracene	EPA 8270D
Benzo(a)anthracene	EPA 8270D
Benzo(a)pyrene	EPA 8270D
Benzo(b)fluoranthene	EPA 8270D
Benzo(ghi)perylene	EPA 8270D
Benzo(k)fluoranthene	EPA 8270D
Chrysene	EPA 8270D
Dibenzo(a,h)anthracene	EPA 8270D
Fluoranthene	EPA 8270D
Fluorene	EPA 8270D
Indeno(1,2,3-cd)pyrene	EPA 8270D
Naphthalene	EPA 8270D
Phenanthrene	EPA 8270D
Pyrene	EPA 8270D
Priority Pollutant Phenols	
2,3,4,6 Tetrachlorophenol	EPA 8270D
2,4,5-Trichlorophenol	EPA 8270D
2,4,6-Trichlorophenol	EPA 8270D
2,4-Dichlorophenol	EPA 8270D
2,4-Dimethylphenol	EPA 8270D
2,4-Dinitrophenol	EPA 8270D

Priority Pollutant Phenols	
2-Chlorophenol	EPA 8270D
2-Methyl-4,6-dinitrophenol	EPA 8270D
2-Methylphenol	EPA 8270D
2-Nitrophenol	EPA 8270D
3-Methylphenol	EPA 8270D
4-Chloro-3-methylphenol	EPA 8270D
4-Methylphenol	EPA 8270D
4-Nitrophenol	EPA 8270D
Pentachlorophenol	EPA 8270D
Phenol	EPA 8270D
Semi-Volatile Organics	
1,1'-Biphenyl	EPA 8270D
1,2-Dichlorobenzene, Semi-volatile	EPA 8270D
1,3-Dichlorobenzene, Semi-volatile	EPA 8270D
1,4-Dichlorobenzene, Semi-volatile	EPA 8270D
2-Methylnaphthalene	EPA 8270D
Acetophenone	EPA 8270D
Benzaldehyde	EPA 8270D
Benzoic Acid	EPA 8270D
Benzyl alcohol	EPA 8270D
Caprolactam	EPA 8270D
Dibenzofuran	EPA 8270D
Volatile Aromatics	
1,2,4-Trichlorobenzene, Volatile	EPA 8260C
1,2,4-Trimethylbenzene	EPA 8260C

Serial No.: 53897

Property of the New York State Department of Health. Certificates are valid only at the address shown, must be conspicuously posted, and are printed on secure paper. Continued accreditation depends on successful ongoing participation in the Program. Consumers are urged to call (518) 485-5570 to verify the laboratory's accreditation status.

NEW YORK STATE DEPARTMENT OF HEALTH
WADSWORTH CENTER

Expires 12:01 AM April 01, 2017
Issued April 01, 2016

CERTIFICATE OF APPROVAL FOR LABORATORY SERVICE

Issued in accordance with and pursuant to section 502 Public Health Law of New York State

MS. KRISTINE A. DUSABLON
TESTAMERICA LABORATORIES INC
30 COMMUNITY DRIVE SUITE #11
SOUTH BURLINGTON, VT 05403

NY Lab Id No: 10391

is hereby APPROVED as an Environmental Laboratory in conformance with the National Environmental Laboratory Accreditation Conference Standards (2003) for the category ENVIRONMENTAL ANALYSES NON POTABLE WATER
All approved analytes are listed below:

Volatile Aromatics

1,2-Dichlorobenzene	EPA 8260C
1,3,5-Trimethylbenzene	EPA 8260C
1,3-Dichlorobenzene	EPA 8260C
1,4-Dichlorobenzene	EPA 8260C
2-Chlorotoluene	EPA 8260C
4-Chlorotoluene	EPA 8260C
Benzene	EPA 8260C
Bromobenzene	EPA 8260C
Chlorobenzene	EPA 8260C
Ethyl benzene	EPA 8260C
Isopropylbenzene	EPA 8260C
m/p-Xylenes	EPA 8260C
Naphthalene, Volatile	EPA 8260C
n-Butylbenzene	EPA 8260C
n-Propylbenzene	EPA 8260C
o-Xylene	EPA 8260C
p-Isopropyltoluene (P-Cymene)	EPA 8260C
sec-Butylbenzene	EPA 8260C
Styrene	EPA 8260C
tert-Butylbenzene	EPA 8260C
Toluene	EPA 8260C
Total Xylenes	EPA 8260C

Volatile Halocarbons

1,1,1,2-Tetrachloroethane	EPA 8260C
1,1,1-Trichloroethane	EPA 8260C

Volatile Halocarbons

1,1,2,2-Tetrachloroethane	EPA 8260C
1,1,2-Trichloro-1,2,2-Trifluoroethane	EPA 8260C
1,1,2-Trichloroethane	EPA 8260C
1,1-Dichloroethane	EPA 8260C
1,1-Dichloroethene	EPA 8260C
1,1-Dichloropropene	EPA 8260C
1,2,3-Trichloropropane	EPA 8260C
1,2-Dibromo-3-chloropropane	EPA 8260C
1,2-Dibromoethane	EPA 8260C
1,2-Dichloroethane	EPA 8260C
1,2-Dichloropropane	EPA 8260C
1,3-Dichloropropane	EPA 8260C
2,2-Dichloropropane	EPA 8260C
2-Chloro-1,3-butadiene (Chloroprene)	EPA 8260C
2-Chloroethylvinyl ether	EPA 8260C
3-Chloropropene (Allyl chloride)	EPA 8260C
Bromochloromethane	EPA 8260C
Bromodichloromethane	EPA 8260C
Bromoform	EPA 8260C
Bromomethane	EPA 8260C
Carbon tetrachloride	EPA 8260C
Chloroethane	EPA 8260C
Chloroform	EPA 8260C
Chloromethane	EPA 8260C
cis-1,2-Dichloroethene	EPA 8260C
cis-1,3-Dichloropropene	EPA 8260C

Serial No.: 53897

Property of the New York State Department of Health. Certificates are valid only at the address shown, must be conspicuously posted, and are printed on secure paper. Continued accreditation depends on successful ongoing participation in the Program. Consumers are urged to call (518) 485-5570 to verify the laboratory's accreditation status.

NEW YORK STATE DEPARTMENT OF HEALTH
WADSWORTH CENTER

Expires 12:01 AM April 01, 2017
Issued April 01, 2016

CERTIFICATE OF APPROVAL FOR LABORATORY SERVICE

Issued in accordance with and pursuant to section 502 Public Health Law of New York State

MS. KRISTINE A. DUSABLON
TESTAMERICA LABORATORIES INC
30 COMMUNITY DRIVE SUITE #11
SOUTH BURLINGTON, VT 05403

NY Lab Id No: 10391

is hereby APPROVED as an Environmental Laboratory in conformance with the National Environmental Laboratory Accreditation Conference Standards (2003) for the category ENVIRONMENTAL ANALYSES NON POTABLE WATER
All approved analytes are listed below:

Volatile Halocarbons	
Dibromochloromethane	EPA 8260C
Dibromomethane	EPA 8260C
Dichlorodifluoromethane	EPA 8260C
Hexachlorobutadiene, Volatile	EPA 8260C
Methyl iodide	EPA 8260C
Methylene chloride	EPA 8260C
Tetrachloroethene	EPA 8260C
trans-1,2-Dichloroethene	EPA 8260C
trans-1,3-Dichloropropene	EPA 8260C
trans-1,4-Dichloro-2-butene	EPA 8260C
Trichloroethene	EPA 8260C
Trichlorofluoromethane	EPA 8260C
Vinyl chloride	EPA 8260C
Volatiles Organics	
1,4-Dioxane	EPA 8260C
2-Butanone (Methylethyl ketone)	EPA 8260C
2-Hexanone	EPA 8260C
4-Methyl-2-Pentanone	EPA 8260C
Acetone	EPA 8260C
Carbon Disulfide	EPA 8260C
Cyclohexane	EPA 8260C
Isobutyl alcohol	EPA 8260C
Methyl acetate	EPA 8260C
Methyl cyclohexane	EPA 8260C
Vinyl acetate	EPA 8260C

Sample Preparation Methods
EPA 5030C
EPA 3010A
EPA 3510C
EPA 3520C

Serial No.: 53897

Property of the New York State Department of Health. Certificates are valid only at the address shown, must be conspicuously posted, and are printed on secure paper. Continued accreditation depends on successful ongoing participation in the Program. Consumers are urged to call (518) 485-5570 to verify the laboratory's accreditation status.

NEW YORK STATE DEPARTMENT OF HEALTH
WADSWORTH CENTER

Expires 12:01 AM April 01, 2017
Issued April 01, 2016

CERTIFICATE OF APPROVAL FOR LABORATORY SERVICE

Issued in accordance with and pursuant to section 502 Public Health Law of New York State

MS. KRISTINE A. DUSABLON
TESTAMERICA LABORATORIES INC
30 COMMUNITY DRIVE SUITE #11
SOUTH BURLINGTON, VT 05403

NY Lab Id No: 10391

is hereby APPROVED as an Environmental Laboratory in conformance with the National Environmental Laboratory Accreditation Conference Standards (2003) for the category ENVIRONMENTAL ANALYSES SOLID AND HAZARDOUS WASTE
All approved analytes are listed below:

Acrylates	
Acrolein (Propenal)	EPA 8260C
Acrylonitrile	EPA 8260C
Ethyl methacrylate	EPA 8260C
Methyl acrylonitrile	EPA 8260C
Methyl methacrylate	EPA 8260C
Amines	
2-Nitroaniline	EPA 8270D
3-Nitroaniline	EPA 8270D
4-Chloroaniline	EPA 8270D
4-Nitroaniline	EPA 8270D
Aniline	EPA 8270D
Carbazole	EPA 8270D
Diphenylamine	EPA 8270D
Benzidines	
3,3'-Dichlorobenzidine	EPA 8270D
Benzidine	EPA 8270D
Characteristic Testing	
Synthetic Precipitation Leaching Proc.	EPA 1312
TCLP	EPA 1311
Chlorinated Hydrocarbon Pesticides	
4,4'-DDD	EPA 8081B
4,4'-DDE	EPA 8081B
4,4'-DDT	EPA 8081B
Aldrin	EPA 8081B

Chlorinated Hydrocarbon Pesticides	
alpha-BHC	EPA 8081B
alpha-Chlordane	EPA 8081B
Atrazine	EPA 8270D
beta-BHC	EPA 8081B
Chlordane Total	EPA 8081B
delta-BHC	EPA 8081B
Dieldrin	EPA 8081B
Endosulfan I	EPA 8081B
Endosulfan II	EPA 8081B
Endosulfan sulfate	EPA 8081B
Endrin	EPA 8081B
Endrin aldehyde	EPA 8081B
Endrin Ketone	EPA 8081B
gamma-Chlordane	EPA 8081B
Heptachlor	EPA 8081B
Heptachlor epoxide	EPA 8081B
Lindane	EPA 8081B
Methoxychlor	EPA 8081B
Toxaphene	EPA 8081B
Chlorinated Hydrocarbons	
1,2,3-Trichlorobenzene	EPA 8260C
1,2,4,5-Tetrachlorobenzene	EPA 8270D
1,2,4-Trichlorobenzene	EPA 8270D
2-Chloronaphthalene	EPA 8270D
Hexachlorobenzene	EPA 8270D

Serial No.: 53898

Property of the New York State Department of Health. Certificates are valid only at the address shown, must be conspicuously posted, and are printed on secure paper. Continued accreditation depends on successful ongoing participation in the Program. Consumers are urged to call (518) 485-5570 to verify the laboratory's accreditation status.

NEW YORK STATE DEPARTMENT OF HEALTH
WADSWORTH CENTER

Expires 12:01 AM April 01, 2017
Issued April 01, 2016

CERTIFICATE OF APPROVAL FOR LABORATORY SERVICE

Issued in accordance with and pursuant to section 502 Public Health Law of New York State

MS. KRISTINE A DUSABLON
TESTAMERICA LABORATORIES INC
30 COMMUNITY DRIVE SUITE #11
SOUTH BURLINGTON, VT 05403

NY Lab Id No: 10391

is hereby APPROVED as an Environmental Laboratory in conformance with the National Environmental Laboratory Accreditation Conference Standards (2003) for the category ENVIRONMENTAL ANALYSES SOLID AND HAZARDOUS WASTE
All approved analytes are listed below:

Chlorinated Hydrocarbons	
Hexachlorobutadiene	EPA 8270D
Hexachlorocyclopentadiene	EPA 8270D
Hexachloroethane	EPA 8270D
Haloethers	
4-Bromophenylphenyl ether	EPA 8270D
4-Chlorophenylphenyl ether	EPA 8270D
Bis(2-chloroethoxy)methane	EPA 8270D
Bis(2-chloroethyl)ether	EPA 8270D
Metals I	
Barium, Total	EPA 6010C
	EPA 6020A
Cadmium, Total	EPA 6010C
	EPA 6020A
Calcium, Total	EPA 6010C
Chromium, Total	EPA 6010C
	EPA 6020A
Copper, Total	EPA 6010C
	EPA 6020A
Iron, Total	EPA 6010C
	EPA 6020A
Lead, Total	EPA 6010C
	EPA 6020A
Magnesium, Total	EPA 6010C
Manganese, Total	EPA 6010C
	EPA 6020A
Metals I	
Nickel, Total	EPA 6010C
	EPA 6020A
Potassium, Total	EPA 6010C
Silver, Total	EPA 6010C
	EPA 6020A
Sodium, Total	EPA 6010C
Strontium, Total	EPA 6010C
Metals II	
Aluminum, Total	EPA 6010C
	EPA 6020A
Antimony, Total	EPA 6010C
	EPA 6020A
Arsenic, Total	EPA 6010C
	EPA 6020A
Beryllium, Total	EPA 6010C
	EPA 6020A
Mercury, Total	EPA 7471B
Selenium, Total	EPA 6010C
	EPA 6020A
Vanadium, Total	EPA 6010C
	EPA 6020A
Zinc, Total	EPA 6010C
	EPA 6020A
Metals III	
Cobalt, Total	EPA 6010C

Serial No.: 53898

Property of the New York State Department of Health. Certificates are valid only at the address shown, must be conspicuously posted, and are printed on secure paper. Continued accreditation depends on successful ongoing participation in the Program. Consumers are urged to call (518) 485-5570 to verify the laboratory's accreditation status.

NEW YORK STATE DEPARTMENT OF HEALTH
WADSWORTH CENTER

Expires 12:01 AM April 01, 2017
Issued April 01, 2016

CERTIFICATE OF APPROVAL FOR LABORATORY SERVICE

Issued in accordance with and pursuant to section 502 Public Health Law of New York State

MS. KRISTINE A. DUSABLON
TESTAMERICA LABORATORIES INC
30 COMMUNITY DRIVE SUITE #11
SOUTH BURLINGTON, VT 05403

NY Lab Id No: 10391

is hereby APPROVED as an Environmental Laboratory in conformance with the National Environmental Laboratory Accreditation Conference Standards (2003) for the category ENVIRONMENTAL ANALYSES SOLID AND HAZARDOUS WASTE
All approved analytes are listed below:

Metals III	
Cobalt, Total	EPA 6020A
Molybdenum, Total	EPA 6010C
	EPA 6020A
Thallium, Total	EPA 6010C
	EPA 6020A
Tin, Total	EPA 6010C
Miscellaneous	
Cyanide, Total	EPA 9012B
Organic Carbon, Total	USER DEFINED Lloyd Kahn mod
Nitroaromatics and Isophorone	
1,3,5-Trinitrobenzene	EPA 8330B
1,3-Dinitrobenzene	EPA 8330B
2,4,6-Trinitrotoluene	EPA 8330B
2,4-Dinitrotoluene	EPA 8270D
	EPA 8330B
2,6-Dinitrotoluene	EPA 8270D
	EPA 8330B
2-Amino-4,6-dinitrotoluene	EPA 8330B
2-Nitrotoluene	EPA 8330B
3-Nitrotoluene	EPA 8330B
4-Amino-2,6-dinitrotoluene	EPA 8330B
4-Nitrotoluene	EPA 8330B
Hexahydro-1,3,5-trinitro-1,3,5-triazine	EPA 8330B
Isophorone	EPA 8270D
Methyl-2,4,6-trinitrophenylnitramine	EPA 8330B
Nitroaromatics and Isophorone	
Nitrobenzene	EPA 8270D
	EPA 8330B
Octahydro-tetranitro-tetrazocine	EPA 8330B
Pyridine	EPA 8270D
Nitrosoamines	
N-Nitrosodimethylamine	EPA 8270D
N-Nitrosodi-n-propylamine	EPA 8270D
N-Nitrosodiphenylamine	EPA 8270D
Phthalate Esters	
Benzyl butyl phthalate	EPA 8270D
Bis(2-ethylhexyl) phthalate	EPA 8270D
Diethyl phthalate	EPA 8270D
Dimethyl phthalate	EPA 8270D
Di-n-butyl phthalate	EPA 8270D
Di-n-octyl phthalate	EPA 8270D
Polychlorinated Biphenyls	
PCB-1016	EPA 8082A
PCB-1221	EPA 8082A
PCB-1232	EPA 8082A
PCB-1242	EPA 8082A
PCB-1248	EPA 8082A
PCB-1254	EPA 8082A
PCB-1260	EPA 8082A
PCB-1262	EPA 8082A

Serial No.: 53898

Property of the New York State Department of Health. Certificates are valid only at the address shown, must be conspicuously posted, and are printed on secure paper. Continued accreditation depends on successful ongoing participation in the Program. Consumers are urged to call (518) 485-5570 to verify the laboratory's accreditation status.

ACCREDITATION BODY

NEW YORK STATE DEPARTMENT OF HEALTH
WADSWORTH CENTER

Expires 12:01 AM April 01, 2017
Issued April 01, 2016

CERTIFICATE OF APPROVAL FOR LABORATORY SERVICE

Issued in accordance with and pursuant to section 502 Public Health Law of New York State

MS. KRISTINE A. DUSABLON
TESTAMERICA LABORATORIES INC
30 COMMUNITY DRIVE SUITE #11
SOUTH BURLINGTON, VT 05403

NY Lab Id No: 10391

is hereby APPROVED as an Environmental Laboratory in conformance with the National Environmental Laboratory Accreditation Conference Standards (2003) for the category ENVIRONMENTAL ANALYSES SOLID AND HAZARDOUS WASTE
All approved analytes are listed below:

Polychlorinated Biphenyls	
PCB-1268	EPA 8082A
Polynuclear Aromatic Hydrocarbons	
Acenaphthene	EPA 8270D
Acenaphthylene	EPA 8270D
Anthracene	EPA 8270D
Benzo(a)anthracene	EPA 8270D
Benzo(a)pyrene	EPA 8270D
Benzo(b)fluoranthene	EPA 8270D
Benzo(ghi)perylene	EPA 8270D
Benzo(k)fluoranthene	EPA 8270D
Chrysene	EPA 8270D
Dibenzo(a,h)anthracene	EPA 8270D
Fluoranthene	EPA 8270D
Fluorene	EPA 8270D
Indeno(1,2,3-cd)pyrene	EPA 8270D
Naphthalene	EPA 8270D
Phenanthrene	EPA 8270D
Pyrene	EPA 8270D
Priority Pollutant Phenols	
2,3,4,6 Tetrachlorophenol	EPA 8270D
2,4,5-Trichlorophenol	EPA 8270D
2,4,6-Trichlorophenol	EPA 8270D
2,4-Dichlorophenol	EPA 8270D
2,4-Dimethylphenol	EPA 8270D
2,4-Dinitrophenol	EPA 8270D

Priority Pollutant Phenols	
2-Chlorophenol	EPA 8270D
2-Methyl-4,6-dinitrophenol	EPA 8270D
2-Methylphenol	EPA 8270D
2-Nitrophenol	EPA 8270D
3-Methylphenol	EPA 8270D
4-Chloro-3-methylphenol	EPA 8270D
4-Methylphenol	EPA 8270D
4-Nitrophenol	EPA 8270D
Pentachlorophenol	EPA 8270D
Phenol	EPA 8270D
Semi-Volatile Organics	
1,1'-Biphenyl	EPA 8270D
1,2-Dichlorobenzene, Semi-volatile	EPA 8270D
1,3-Dichlorobenzene, Semi-volatile	EPA 8270D
1,4-Dichlorobenzene, Semi-volatile	EPA 8270D
2-Methylnaphthalene	EPA 8270D
Acetophenone	EPA 8270D
Benzaldehyde	EPA 8270D
Benzoic Acid	EPA 8270D
Benzyl alcohol	EPA 8270D
Caprolactam	EPA 8270D
Dibenzofuran	EPA 8270D
Volatile Aromatics	
1,2,4-Trichlorobenzene, Volatile	EPA 8260C
1,2,4-Trimethylbenzene	EPA 8260C

Serial No.: 53898

Property of the New York State Department of Health. Certificates are valid only at the address shown, must be conspicuously posted, and are printed on secure paper. Continued accreditation depends on successful ongoing participation in the Program. Consumers are urged to call (518) 485-5570 to verify the laboratory's accreditation status.

NEW YORK STATE DEPARTMENT OF HEALTH
WADSWORTH CENTER

Expires 12:01 AM April 01, 2017
Issued April 01, 2016

CERTIFICATE OF APPROVAL FOR LABORATORY SERVICE

Issued in accordance with and pursuant to section 502 Public Health Law of New York State

MS. KRISTINE A. DUSABLON
TESTAMERICA LABORATORIES INC
30 COMMUNITY DRIVE SUITE #11
SOUTH BURLINGTON, VT 05403

NY Lab Id No: 10391

is hereby APPROVED as an Environmental Laboratory in conformance with the National Environmental Laboratory Accreditation Conference Standards (2003) for the category ENVIRONMENTAL ANALYSES SOLID AND HAZARDOUS WASTE
All approved analytes are listed below:

Volatile Aromatics

1,2-Dichlorobenzene	EPA 8260C
1,3,5-Trimethylbenzene	EPA 8260C
1,3-Dichlorobenzene	EPA 8260C
1,4-Dichlorobenzene	EPA 8260C
2-Chlorotoluene	EPA 8260C
4-Chlorotoluene	EPA 8260C
Benzene	EPA 8260C
Bromobenzene	EPA 8260C
Chlorobenzene	EPA 8260C
Ethyl benzene	EPA 8260C
Isopropylbenzene	EPA 8260C
m/p-Xylenes	EPA 8260C
Naphthalene, Volatile	EPA 8260C
n-Butylbenzene	EPA 8260C
n-Propylbenzene	EPA 8260C
o-Xylene	EPA 8260C
p-Isopropyltoluene (P-Cymene)	EPA 8260C
sec-Butylbenzene	EPA 8260C
Styrene	EPA 8260C
tert-Butylbenzene	EPA 8260C
Toluene	EPA 8260C
Total Xylenes	EPA 8260C

Volatile Halocarbons

1,1,1,2-Tetrachloroethane	EPA 8260C
1,1,1-Trichloroethane	EPA 8260C

Volatile Halocarbons

1,1,2,2-Tetrachloroethane	EPA 8260C
1,1,2-Trichloro-1,2,2-Trifluoroethane	EPA 8260C
1,1,2-Trichloroethane	EPA 8260C
1,1-Dichloroethane	EPA 8260C
1,1-Dichloroethene	EPA 8260C
1,1-Dichloropropene	EPA 8260C
1,2,3-Trichloropropane	EPA 8260C
1,2-Dibromo-3-chloropropane	EPA 8260C
1,2-Dibromoethane	EPA 8260C
1,2-Dichloroethane	EPA 8260C
1,2-Dichloropropane	EPA 8260C
1,3-Dichloropropane	EPA 8260C
2,2-Dichloropropane	EPA 8260C
2-Chloro-1,3-butadiene (Chloroprene)	EPA 8260C
2-Chloroethylvinyl ether	EPA 8260C
3-Chloropropene (Allyl chloride)	EPA 8260C
Bromochloromethane	EPA 8260C
Bromodichloromethane	EPA 8260C
Bromoform	EPA 8260C
Bromomethane	EPA 8260C
Carbon tetrachloride	EPA 8260C
Chloroethane	EPA 8260C
Chloroform	EPA 8260C
Chloromethane	EPA 8260C
cis-1,2-Dichloroethene	EPA 8260C
cis-1,3-Dichloropropene	EPA 8260C

Serial No.: 53898

Property of the New York State Department of Health. Certificates are valid only at the address shown, must be conspicuously posted, and are printed on secure paper. Continued accreditation depends on successful ongoing participation in the Program. Consumers are urged to call (518) 485-5570 to verify the laboratory's accreditation status.

NEW YORK STATE DEPARTMENT OF HEALTH
WADSWORTH CENTER

Expires 12:01 AM April 01, 2017
Issued April 01, 2016

CERTIFICATE OF APPROVAL FOR LABORATORY SERVICE

Issued in accordance with and pursuant to section 502 Public Health Law of New York State

MS. KRISTINE A. DUSABLON
TESTAMERICA LABORATORIES INC
30 COMMUNITY DRIVE SUITE #11
SOUTH BURLINGTON, VT 05403

NY Lab Id No: 10391

is hereby APPROVED as an Environmental Laboratory in conformance with the National Environmental Laboratory Accreditation Conference Standards (2003) for the category ENVIRONMENTAL ANALYSES SOLID AND HAZARDOUS WASTE
All approved analytes are listed below:

Volatile Halocarbons

Dibromochloromethane	EPA 8260C
Dibromomethane	EPA 8260C
Dichlorodifluoromethane	EPA 8260C
Hexachlorobutadiene, Volatile	EPA 8260C
Methyl iodide	EPA 8260C
Methylene chloride	EPA 8260C
Tetrachloroethene	EPA 8260C
trans-1,2-Dichloroethene	EPA 8260C
trans-1,3-Dichloropropene	EPA 8260C
trans-1,4-Dichloro-2-butene	EPA 8260C
Trichloroethene	EPA 8260C
Trichlorofluoromethane	EPA 8260C
Vinyl chloride	EPA 8260C

Volatile Organics

1,4-Dioxane	EPA 8260C
2-Butanone (Methylethyl ketone)	EPA 8260C
2-Hexanone	EPA 8260C
4-Methyl-2-Pentanone	EPA 8260C
Acetone	EPA 8260C
Carbon Disulfide	EPA 8260C
Cyclohexane	EPA 8260C
Isobutyl alcohol	EPA 8260C
Methyl acetate	EPA 8260C
Methyl cyclohexane	EPA 8260C
Methyl tert-butyl ether	EPA 8260C

Volatile Organics

o-Toluidine	EPA 8270D
Propionitrile	EPA 8260C
tert-butyl alcohol	EPA 8260C
Vinyl acetate	EPA 8260C

Sample Preparation Methods

EPA 5035A-L
EPA 5035A-H
EPA 3050B
EPA 3550C
EPA 3540C
EPA 3541

Serial No.: 53898

Property of the New York State Department of Health. Certificates are valid only at the address shown, must be conspicuously posted, and are printed on secure paper. Continued accreditation depends on successful ongoing participation in the Program. Consumers are urged to call (518) 485-5570 to verify the laboratory's accreditation status.

NELAP RECOGNIZED
TNI
ACCREDITATION BODY

NEW YORK STATE DEPARTMENT OF HEALTH
WADSWORTH CENTER

Expires 12:01 AM April 01, 2017
Issued April 01, 2016

CERTIFICATE OF APPROVAL FOR LABORATORY SERVICE

Issued in accordance with and pursuant to section 502 Public Health Law of New York State

MS. KRISTINE A DUSABLON
TESTAMERICA LABORATORIES INC
30 COMMUNITY DRIVE SUITE #11
SOUTH BURLINGTON, VT 05403

NY Lab Id No: 10391

is hereby APPROVED as an Environmental Laboratory in conformance with the National Environmental Laboratory Accreditation Conference Standards (2003) for the category ENVIRONMENTAL ANALYSES AIR AND EMISSIONS
All approved analytes are listed below:

Acrylates	
Acetonitrile	EPA TO-15
Methyl methacrylate	EPA TO-15
Chlorinated Hydrocarbons	
1,2,4-Trichlorobenzene	EPA TO-15
Hexachlorobutadiene	EPA TO-15
Polychlorinated Biphenyls	
PCBs and Aroclors	EPA TO-10A
	EPA TO-4A
Polynuclear Aromatics	
Acenaphthene	EPA TO-13A
Acenaphthylene	EPA TO-13A
Anthracene	EPA TO-13A
Benzo(a)anthracene	EPA TO-13A
Benzo(a)pyrene	EPA TO-13A
Benzo(b)fluoranthene	EPA TO-13A
Benzo(ghi)perylene	EPA TO-13A
Benzo(k)fluoranthene	EPA TO-13A
Chrysene	EPA TO-13A
Dibenzo(a,h)anthracene	EPA TO-13A
Fluoranthene	EPA TO-13A
Fluorene	EPA TO-13A
Indeno(1,2,3-cd)pyrene	EPA TO-13A
Naphthalene	EPA TO-13A
	EPA TO-15

Polynuclear Aromatics	
Phenanthrene	EPA TO-13A
Pyrene	EPA TO-13A
Purgeable Aromatics	
1,2,4-Trimethylbenzene	EPA TO-15
1,2-Dichlorobenzene	EPA TO-15
1,3,5-Trimethylbenzene	EPA TO-15
1,3-Dichlorobenzene	EPA TO-15
1,4-Dichlorobenzene	EPA TO-15
2-Chlorotoluene	EPA TO-15
Benzene	EPA TO-15
Chlorobenzene	EPA TO-15
Ethyl benzene	EPA TO-15
m/p-Xylenes	EPA TO-15
o-Xylene	EPA TO-15
Styrene	EPA TO-15
Toluene	EPA TO-15
Total Xylenes	EPA TO-15
Purgeable Halocarbons	
1,1,1-Trichloroethane	EPA TO-15
1,1,2,2-Tetrachloroethane	EPA TO-15
1,1,2-Trichloro-1,2,2-Trifluoroethane	EPA TO-15
1,1,2-Trichloroethane	EPA TO-15
1,1-Dichloroethane	EPA TO-15
1,1-Dichloroethene	EPA TO-15
1,2-Dibromoethane	EPA TO-15

Serial No.: 53899

Property of the New York State Department of Health. Certificates are valid only at the address shown, must be conspicuously posted, and are printed on secure paper. Continued accreditation depends on successful ongoing participation in the Program. Consumers are urged to call (518) 485-5570 to verify the laboratory's accreditation status.

NEW YORK STATE DEPARTMENT OF HEALTH
WADSWORTH CENTER

Expires 12:01 AM April 01, 2017
Issued April 01, 2016

CERTIFICATE OF APPROVAL FOR LABORATORY SERVICE

Issued in accordance with and pursuant to section 502 Public Health Law of New York State

MS. KRISTINE A. DUSABLON
TESTAMERICA LABORATORIES INC
30 COMMUNITY DRIVE SUITE #11
SOUTH BURLINGTON, VT 05403

NY Lab Id No: 10391

is hereby APPROVED as an Environmental Laboratory in conformance with the National Environmental Laboratory Accreditation Conference Standards (2003) for the category ENVIRONMENTAL ANALYSES AIR AND EMISSIONS
All approved analytes are listed below:

Purgeable Halocarbons	
1,2-Dichloroethane	EPA TO-15
1,2-Dichloropropane	EPA TO-15
3-Chloropropene (Allyl chloride)	EPA TO-15
Bromodichloromethane	EPA TO-15
Bromoform	EPA TO-15
Bromomethane	EPA TO-15
Carbon tetrachloride	EPA TO-15
Chloroethane	EPA TO-15
Chloroform	EPA TO-15
Chloromethane	EPA TO-15
cis-1,2-Dichloroethene	EPA TO-15
cis-1,3-Dichloropropene	EPA TO-15
Dibromochloromethane	EPA TO-15
Dichlorodifluoromethane	EPA TO-15
Methylene chloride	EPA TO-15
Tetrachloroethene	EPA TO-15
trans-1,2-Dichloroethene	EPA TO-15
trans-1,3-Dichloropropene	EPA TO-14A
	EPA TO-15
Trichloroethene	EPA TO-14A
	EPA TO-15
Trichlorofluoromethane	EPA TO-14A
	EPA TO-15
Vinyl bromide	EPA TO-15
Vinyl chloride	EPA TO-14A
	EPA TO-15

Volatile Chlorinated Organics	
Benzyl chloride	EPA TO-15
Volatile Organics	
1,2-Dichlorotetrafluoroethane	EPA TO-14A
	EPA TO-15
1,3-Butadiene	EPA TO-15
1,4-Dioxane	EPA TO-15
2,2,4-Trimethylpentane	EPA TO-15
2-Butanone (Methylethyl ketone)	EPA TO-15
4-Methyl-2-Pentanone	EPA TO-15
Acetone	EPA TO-15
Carbon Disulfide	EPA TO-15
Cyclohexane	EPA TO-15
Hexane	EPA TO-15
Isopropanol	EPA TO-15
Methyl tert-butyl ether	EPA TO-15
n-Heptane	EPA TO-15
tert-butyl alcohol	EPA TO-15

Serial No.: 53899

Property of the New York State Department of Health. Certificates are valid only at the address shown, must be conspicuously posted, and are printed on secure paper. Continued accreditation depends on successful ongoing participation in the Program. Consumers are urged to call (518) 485-5570 to verify the laboratory's accreditation status.

AIHA Laboratory Accreditation Programs, LLC

acknowledges that

RJ Lee Group, Inc.

350 Hochberg Road, Monroeville, PA 15146

Laboratory ID: 100364

along with all premises from which key activities are performed, as listed above, has fulfilled the requirements of the AIHA Laboratory Accreditation Programs (AIHA-LAP), LLC accreditation to the ISO/IEC 17025:2005 international standard, *General Requirements for the Competence of Testing and Calibration Laboratories* in the following:

LABORATORY ACCREDITATION PROGRAMS

✓	**INDUSTRIAL HYGIENE**	Accreditation Expires: 02/01/2018
✓	**ENVIRONMENTAL LEAD**	Accreditation Expires: 02/01/2018
☐	**ENVIRONMENTAL MICROBIOLOGY**	Accreditation Expires:
☐	**FOOD**	Accreditation Expires:
☐	**UNIQUE SCOPES**	Accreditation Expires:

Specific Field(s) of Testing (FoT)/Method(s) within each Accreditation Program for which the above named laboratory maintains accreditation is outlined on the attached **Scope of Accreditation**. Continued accreditation is contingent upon successful on-going compliance with ISO/IEC 17025:2005 and AIHA-LAP, LLC requirements. This certificate is not valid without the attached **Scope of Accreditation**. Please review the AIHA-LAP, LLC website (www.aihaaccreditedlabs.org) for the most current Scope.

Gerald R Schultz

Gerald Schultz, CIH
Chairperson, Analytical Accreditation Board

Cheryl O. Morton

Cheryl O. Morton
Managing Director, AIHA Laboratory Accreditation Programs, LLC

Revision 14: 03/26/2014

Date Issued: 01/29/2016

AIHA Laboratory Accreditation Programs, LLC
SCOPE OF ACCREDITATION

RJ Lee Group, Inc.
350 Hochberg Road, Monroeville, PA 15146

Laboratory ID: **100364**
Issue Date: 01/29/2016

The laboratory is approved for those specific field(s) of testing/methods listed in the table below. Clients are urged to verify the laboratory's current accreditation status for the particular field(s) of testing/Methods, since these can change due to proficiency status, suspension and/or withdrawal of accreditation.

Industrial Hygiene Laboratory Accreditation Program (IHLAP)

Initial Accreditation Date: 09/01/1991

IHLAP Scope Category	Field of Testing (FoT) (FoTs cover all relevant IH matrices)	Technology sub-type/ Detector	Published Reference Method/Title of In-house Method	Method Description or Analyte *(for internal methods only)*
Chromatography Core	Gas Chromatography	GC/FID	NIOSH 1003	
			NIOSH 1005	
			NIOSH 1007	
			NIOSH 1022	
			NIOSH 1300	
			NIOSH 1301	
			NIOSH 1400	
			NIOSH 1401	
			NIOSH 1402	
			NIOSH 1403	
			NIOSH 1450	
			NIOSH 1453	
			NIOSH 1457	
			NIOSH 1458	
			NIOSH 1459	
			NIOSH 1500	
			NIOSH 1501	
			NIOSH 1550	
			NIOSH 1615	
			NIOSH 2000	
			NIOSH 2500	
			NIOSH 2537	
			NIOSH 2546	

AIHA
Laboratory Accreditation Programs, LLC

IHLAP Scope Category	Field of Testing (FoT) (FoTs cover all relevant IH matrices)	Technology sub-type/ Detector	Published Reference Method/Title of In-house Method	Method Description or Analyte *(for internal methods only)*
Chromatography Core	Gas Chromatography	GC/FID	NIOSH 2553	
			NIOSH 2554	
			NIOSH 2555	
			NIOSH 5020	
			NIOSH 5515	
			NIOSH 5523	
	Gas Chromatography (Diffusive Samplers)		NIOSH 1003	
			NIOSH 1005	
			NIOSH 1007	
			NIOSH 1022	
			NIOSH 1300	
			NIOSH 1301	
			NIOSH 1400	
			NIOSH 1401	
			NIOSH 1402	
			NIOSH 1403	
			NIOSH 1450	
			NIOSH 1453	
			NIOSH 1457	
			NIOSH 1458	
			NIOSH 1459	
			NIOSH 1500	
			NIOSH 1501	
			NIOSH 1550	
			NIOSH 1615	
			NIOSH 2000	
			NIOSH 2500	
			NIOSH 2537	
			NIOSH 2546	
			NIOSH 2553	
			NIOSH 2554	
			NIOSH 2555	
			NIOSH 4000	
			NIOSH 5020	
			NIOSH 5515	
			NIOSH 5523	
	Ion Chromatography (IC)		NIOSH 7903	
			OSHA ID - 215	

AIHA Laboratory Accreditation Programs, LLC
SCOPE OF ACCREDITATION

RJ Lee Group, Inc.
350 Hochberg Road, Monroeville, PA 15146

Laboratory ID: **100364**
Issue Date: 01/29/2016

The laboratory is approved for those specific field(s) of testing/methods listed in the table below. Clients are urged to verify the laboratory's current accreditation status for the particular field(s) of testing/Methods, since these can change due to proficiency status, suspension and/or withdrawal of accreditation.

The EPA recognizes the AIHA-LAP, LLC ELLAP program as meeting the requirements of the National Lead Laboratory Accreditation Program (NLLAP) established under Title X of the Residential Lead-Based Paint Hazard Reduction Act of 1992 and includes paint, soil and dust wipe analysis. Air analysis is not included as part of the NLLAP.

Environmental Lead Laboratory Accreditation Program (ELLAP)

Initial Accreditation Date: 12/05/1995

Field of Testing (FoT)	Technology sub-type/ Detector	Method	Method Description *(for internal methods only)*
Paint		EPA SW-846 3050B	
		EPA SW-846 7000B	
Soil		EPA SW-846 3050B	
		EPA SW-846 7000B	
Settled Dust by Wipe		EPA SW-846 3050B	
		EPA SW-846 7000B	
Airborne Dust		NIOSH 7082	
		NIOSH 7300	

A complete listing of currently accredited Environmental Lead laboratories is available on the AIHA-LAP, LLC website at: http://www.aihaaccreditedlabs.org

SHALEWATER
SOLUTIONS

Internal Technical Bulletin

Passive TENORM Management via Unenhanced Flow Through Design

Description: With the closing of the West Virginia Loophole those recycling flowback and produced waters in Appalachia must now be aware of, and prepared to deal with, TENORM as it relates to their processes. Regulations specifically address Ra ^{226} and ^{228} levels in wastes being landfilled.

This Technical Bulletin has been prepared as a case study for an existing client project and is to be used internally for R&D purposes only.

Details: Shalewater Solutions utilizes a proprietary blend of specialty additive chemicals to precipitate deleterious constituents from flowback and produced waters for recycling purposes.

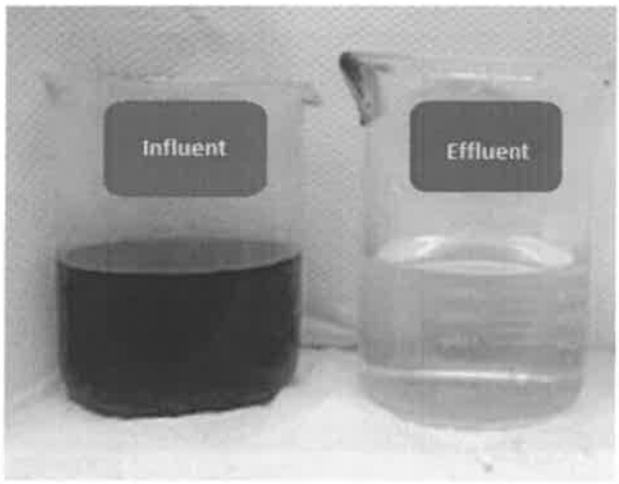

Figure 1. Image of influent and effluent samples from a typical Shalewater recycling facility.

Iron and TSS removal are chief targets when recycling water for slick water fracs. Shalewater's average effluent has a pH of 8.2 with TSS and iron removal rates of 98% and 99% respectively.

Treatment is not designed to remove Alkaline Earth, or group 2, metals of which Ra is a member. Routine testing data indicates that there is no significant reduction in elements which are being monitored as surrogates for Ra.

Shalewater Solutions can design a treatment process to meet any specification. The current approach to treatment reflects the objectives of our existing client base. The philosophy is that it is best and most cost effective to only target what is necessary for adjustment. Only unwanted constituents are removed and this targeted waste stream is then dewatered. The now greatly reduced volume is disposed of in a responsible fashion. Everything else flows through the system in an *unenhanced* fashion where it is blended with fresh water and used to frac another well.

Nothing in the treatment process concentrates the naturally occurring constituents that are permitted to pass through the system. The effluent is also blended with fresh water before it is sent down hole for subsequent fracs. When taken together this means that the levels in produced water will not increase over time as a result of recycling activities.

The Doddridge Independent

The Doddridge Independent
PUBLISHER'S CERTIFICATE

I, Michael D. Zorn, Publisher of The Doddridge Independent, A newspaper of general circulation published in the town of West Union, Doddridge County, West Virginia, do hereby certify that:

Notice of Application

Notice is given that HEP Shalewater Solutions, LLC has applied to the West Virginia Department of Environmental Protection, Division of Air Quality, for a Construction Permit for a facility to reclamation of water from Oil and Gas Exploration and Production located on County Road 11, near West Union, in Doddridge County, West Virginia. The latitude and longitude coordinates are: 39.280799 and -80.81253.

was published in The Doddridge Independent
1 time commencing on Friday, May 13, 2016 and
Ending on Friday, May 13, 2016 at the request of:

HEP Shalewater Solutions, LLC

Given under my hand this Monday, May 16, 2016

The publisher's fee for said publication is:
$ 16.32 1st Run/$ 0 Subsequent Runs
This Legal Ad Total: $ 16.32

Michael D. Zorn
Publisher of The Doddridge Independent

Subscribed to and sworn to before me on
this date: 5 / 16 / 16

Pamela R Stinespring
Notary Public in and for Doddridge County

My Commission expires on
The 17th day of MAY 2019

ID # 017-00160
Reg R13-3317
Company HEP SHALEWATER
Facility CENTRAL STATION Initials

Air Quality Permit Notice

Notice of Application

Notice is given that HEP Shalewater Solutions, LLC has applied to the West Virginia Department of Environmental Protection, Division of Air Quality, for a Construction Permit for a facility to reclamation of water from Oil and Gas Exploration and Production located on County Road 11, near West Union, in Doddridge County, West Virginia. The latitude and longitude coordinates are: 39.280799 and -80.81253.

The applicant estimates the potential to discharge the following Regulated Air Pollutants will be: Particulate Matter 10 (PM10) 7.668 tons per year, Volatile Organic Compounds (VOC) 16.576 tons per year, Total Hazardous Air Pollutants (HAP) 0.357 tons per year.

Startup of operation is planned to begin on or about the 9 day of June, 2016. Written comments will be received by the West Virginia Department of Environmental Protection, Division of Air Quality, 601 57th Street, SE, Charleston, WV 25304, for at least 30 calendar days from the date of publication of this notice.

Any questions regarding this permit application should be directed to the DAQ at (304) 926-0499, extension 1250, during normal business hours.

Dated this the 10th day of May, 2016.

By: HEP Shalewater Solutions, LLC
Tony Gutta
President
37 Grande Meadows Drive, Ste 201
Bridgeport, WV 26330 1x 5/13/16

RCVD BY WVDEP 10:25 AM MAY 18 2016

OFFICIAL SEAL
NOTARY PUBLIC
STATE OF WEST VIRGINIA
PAMELA R. STINESPRING
P. O. BOX 81
WEST UNION, WV 26456
My commission expires May 17, 2019

NON-CONFIDENTIAL

Williams, Jerry

From: Ward, Beth A
Sent: Monday, May 09, 2016 11:27 AM
To: Williams, Jerry
Subject: HEP SHALEWATER SOLUTIONS LLC PERMIT APPLICATION FEE

This is the receipt for payment received from:

HEP SHALEWATER SOLUTION LLC, CENTRAL STATION, CHECK NUMBER 24087, CHECK DATE 05/04/2016, $1,000.00
R13-3317 ID# 017-00160

OASIS Deposit CR 1600122648

Thank You!

Beth Ward

WV DEPARTMENT OF ENVIRONMENTAL PROTECTION
BTO FISCAL
601 57TH STREET SE
CHARLESTON, WV 25304
(304) 926-0499 EXT 1846
beth.a.ward@wv.gov

NON-CONFIDENTIAL

Adkins, Sandra K

From:	Adkins, Sandra K
Sent:	Friday, May 06, 2016 5:00 PM
To:	'tgutta@shalewater.com'; 'rhall@shalewater.com'
Cc:	McKeone, Beverly D; Williams, Jerry
Subject:	WV DAQ Permit Application Status for HEP Shalewater Solutions, LLC; Central Station

RE: Application Status
HEP Shalewater Solutions, LLC
Central Station
Facility ID No. 017-00160
Application No. R13-3317

Mr. Gutta,

Your application for construction permit for the Central Station facility was received by this Division on May 6, 2016, and was assigned to Jerry Williams. The following item was not included in the initial application submittal:

Original affidavit for Class I legal advertisement not submitted.

This item is necessary for the assigned permit writer to continue the 30-day completeness review.

Within 30 days, you should receive a letter from Jerry stating the status of the permit application and, if complete, given an estimated time frame for the agency's final action on the permit.

Any determination of completeness shall not relieve the permit applicant of the requirement to subsequently submit, in a timely manner, any additional or corrected information deemed necessary for a final permit decision.

Should you have any questions, please contact the assigned engineer, Jerry Williams, at 304-926-0499, extension 1223.

NON-CONFIDENTIAL

R13# 3317 Construction
017-00160 Jerry

45CSR13 Administrative Update, Construction, Modification, Relocation, Temporary Permit or General Permit Registration Incomplete Application

A complete application is demonstrated when all of the information required below is properly prepared, completed and attached. The items listed below are required information which must be submitted with a 45CSR13 permit application. Any submittal will be considered incomplete if the required information is not included. The applicant must submit a complete application in order to receive a 45CSR13 permit.

☒ Class I legal advertisement not published in a newspaper certified to accept legal advertisements and original affidavit submitted.

☐ Application fee AND/OR additional application fees not included:
- ☐ $250 Class I General Permit
- ☐ $300 Class II Administrative Update
- ☐ $1,000 Construction, Modification, Relocation or Temporary Permit
- ☐ $500 Class II General Permit
- ☐ $1,000 NSPS
- ☐ $2,500 NESHAP
- ☐ $2,500 45CSR27 Pollutant
- ☐ $5,000 Major Modification
- ☐ $10,000 Major Construction

☐ Original and two (2) copies of the application not submitted.

☐ File organization – application pages are not numbered or in correct order, application is not bound in some way, etc.

☐ Confidential Business Information is not properly identified.

☐ General application forms not completed and signed by a responsible official.

☐ Authority of Corporation form not included – required if application is signed by someone other than a responsible official.

☐ Applicant is not registered with the West Virginia Secretary of State's Office.

☐ Copy of current Business Registration Certificate not included.

☐ Process description, including equipment and emission point identification numbers, not submitted.

☐ Process flow diagram, including equipment and emission point identification numbers, not submitted.

☐ Plot plan, including equipment and emission point identification numbers, not submitted.

☐ Applicable technical forms not completed and submitted:

- ☐ Emission Point Data Summary Sheets
- ☐ Air Pollution Control Device Sheets
- ☐ Emission Unit Data Sheets
- ☐ Equipment List Form

☐ Emission calculations not included – emission factors, references, source identification numbers, etc.

☐ Electronic submittal diskette not included.