Earthtech, Inc.
CONSULTING SCIENTISTS & ENGINEERS

Environmental, Mining & Site Development Services
www.earthtechinc.net

February 23, 2017

West Virginia-Department of Environmental Protection
Division of Air Quality-Permitting Section
601 57th Street, SE
Charleston, WV 25304

RECEIVED
FEB 27 2017
WV DEP / DIV OF AIR QUALITY

RE: G50-B General Permit Application
Portable Concrete Batch Plant
Golden Triangle Construction Co., Inc.
Chester, WV, U.S. Route 30 Refurbishing Project

To Whom It May Concern:

On behalf of Golden Triangle Construction Company, Inc., enclosed are the original along with two copies of the air quality general permit application for the operation of a portable concrete batch plant as part of the refurbishing of U.S. Route 30 near Chester, West Virginia. The submitted permit application packages have been prepared according to the instructions outlined in your *Application Instructions and Forms for General Permit G50-B*. The *Application for General Permit Registration* along with *Attachment A* thru *Attachment P* are enclosed with the submission. In addition the following items are of note:

The legal advertisement is being published on February 27 in *The Review*. A copy of the advertisement is provided in *Attachment J*. The proof of publication will be sent to your office upon our receipt.

Enclosed in *Attachment L*, is check #4961 made out to WV DEP Division of Air Quality for the amount of $500.00 for the permit application fee. The check has been made out to the WV DEP-Division of Air Quality.

If you have any questions or need additional information, please contact me.

Sincerely,

John D. Pile

John D. Pile, M.S. EPC
Project Manager
Sr. Environmental Scientist

cc: Joe Fischer, Project Manager, Golden Triangle Construction Co., Inc.
Chuck Lightfoot, Earthtech, Inc. (Letter Only)

CERTIFIED MAIL #7016 0600 0000 5457 2175
Enclosure (3)

Mailing Address: 966 Pleasant Hill Road, Somerset, PA 15501

Office Numbers: Somerset: (814) 266-6402 FAX: (814) 266-6530
Uniontown: (724) 439-1313 FAX: (724) 439-0633

Application for General Permit Registration
General Permit G50-B
West Virginia – DEP
Division of Air Quality
For

Operation of Concrete Batch Plant

Golden Triangle Construction Company, Inc.
8555 Old Steubenville Pike
Imperial, PA 15126

Located At:

Chester, West Virginia
Hancock County, WV

Date Prepared:
February 23, 2017

Prepared By:
Earthtech, Inc.
966 Pleasant Hill Road
Somerset, PA 15501
Telephone: (814) 266-6402
Fax: (814) 266-6530

Table of Contents

Application for General Permit Registration

WEST VIRGINIA
DEPARTMENT OF ENVIRONMENTAL PROTECTION
DIVISION OF AIR QUALITY
601 57th Street, SE
Charleston, WV 25304
Phone: (304) 926-0475 • www.dep.wv.gov/daq

APPLICATION FOR GENERAL PERMIT REGISTRATION

CONSTRUCT, MODIFY, RELOCATE OR ADMINISTRATIVELY UPDATE A STATIONARY SOURCE OF AIR POLLUTANTS

9 CONSTRUCTION 9 MODIFICATION 9 RELOCATION 9 CLASS I ADMINISTRATIVE UPDATE
9 CLASS II ADMINISTRATIVE UPDATE

CHECK WHICH TYPE OF GENERAL PERMIT REGISTRATION YOU ARE APPLYING FOR:

9 **G10-D** – Coal Preparation and Handling
9 **G20-B** – Hot Mix Asphalt
9 **G30-D** – Natural Gas Compressor Stations
9 **G33-A** – Spark Ignition Internal Combustion Engines
9 **G35-A** – Natural Gas Compressor Stations (Flare/Glycol Dehydration Unit)
9 **G40-C** – Nonmetallic Minerals Processing
9 **G50-B** – Concrete Batch
9 **G60-C** - Class II Emergency Generator
9 **G65-C** – Class I Emergency Generator
9 **G70-A** – Class II Oil and Natural Gas Production Facility

SECTION I. GENERAL INFORMATION

1. Name of applicant (as registered with the WV Secretary of State's Office): **Golden Triangle Construction Company, Inc.**

2. Federal Employer ID No. (FEIN): **25-0990800**

3. Applicant's mailing address: **8555 Old Steubenville Pike**
Imperial, PA 15126

4. Applicant's physical address: **Same as mailing address**

5. If applicant is a subsidiary corporation, please provide the name of parent corporation: N/A

6. **WV BUSINESS REGISTRATION.** Is the applicant a resident of the State of West Virginia? 9 YES 9 NO
   - IF **YES**, provide a copy of the Certificate of **Incorporation/ Organization / Limited Partnership** (one page) including any name change amendments or other Business Registration Certificate as **Attachment A.**
   - IF **NO**, provide a copy of the **Certificate of Authority / Authority of LLC / Registration** (one page) including any name change amendments or other Business Certificate as **Attachment A.**

SECTION II. FACILITY INFORMATION

7. Type of plant or facility (stationary source) to be constructed, modified, relocated or administratively updated (e.g., coal preparation plant, primary crusher, etc.): Concrete Batch Plant (mobile)

8a. Standard Industrial Classification Classification (SIC) code: 3273

AND

8b. North American Industry System (NAICS) code:

9. DAQ Plant ID No. (for existing facilities only): N/A

___ ___ ___ - ___ ___ ___ ___ ___

10. List all current 45CSR13 and other General Permit numbers associated with this process (for existing facilities only): N/A

RECEIVED
FEB 27 2017
WV DEP / DIV OF AIR QUALITY

A: PRIMARY OPERATING SITE INFORMATION

11A. Facility name of primary operating site:	12A. Address of primary operating site:
Chester, WV	Mailing: Same as Applicant's Address Physical: Intersection of U.S. Rte. 30 (Lincoln Highway) and S.R. 8, near Shorty's

13A. Does the applicant own, lease, have an option to buy, or otherwise have control of the proposed site? 9 YES 9 NO

- IF YES, please explain: The applicant will lease land where the batch plant is located and will have property control. A copy of the signed *Agreement to Enter Upon and Use Land & Release of Liability* with the property owner is provided in Attachment P.
- IF NO, YOU ARE NOT ELIGIBLE FOR A PERMIT FOR THIS SOURCE.

14A. – For **Modifications or Administrative Updates** at an existing facility, please provide directions to the present location of the facility from the nearest state road;

– For Construction or Relocation permits, please provide directions to the proposed new site location from the nearest state road. Include a MAP as Attachment F.

From Chester, WV take U.S. Route 30 (Lincoln Highway) east to the intersection of U.S. Route 30 (Lincoln Highway) with S.R. 8 near Shorty's Place. Turn onto the ramp leading to S.R. 8 and then make a quick right turn onto the target facility's haulroad leading to the concrete batch plant. See the Area Map in Attachment F.

15A. Nearest city or town:	16A. County:	17A. UTM Coordinates:
Chester, WV	Hancock County	Northing (KM): 765533.3119 Easting (KM): 1679678.3147 Zone: WV North

18A. Briefly describe the proposed new operation or change (s) to the facility:	19A. Latitude & Longitude Coordinates (NAD83, Decimal Degrees to 5 digits):
Installation and operation of mobile concrete batch plant.	Latitude: 40° 35' 49.36" Longitude: 80° 32' 23.84"

B: 1ST ALTERNATE OPERATING SITE INFORMATION (only available for G20, G40, & G50 General Permits)

11B. Name of 1st alternate operating site:	12B. Address of 1st alternate operating site:
	Mailing: Physical:

13B. Does the applicant own, lease, have an option to buy, or otherwise have control of the proposed site? 9 YES 9 NO

- IF YES, please explain:
- IF NO, YOU ARE NOT ELIGIBLE FOR A PERMIT FOR THIS SOURCE.

14B. – For **Modifications or Administrative Updates** at an existing facility, please provide directions to the present location of the facility from the nearest state road;

– For Construction or Relocation permits, please provide directions to the proposed new site location from the nearest state road. Include a **MAP** as **Attachment F.**

15B. Nearest city or town:	16B. County:	17B. UTM Coordinates: Northing (KM): _____ Easting (KM): _____ Zone: _____
18B. Briefly describe the proposed new operation or change (s) to the facility:		19B. Latitude & Longitude Coordinates (NAD83, Decimal Degrees to 5 digits): Latitude: _____ Longitude: _____

C: 2ND ALTERNATE OPERATING SITE INFORMATION (only available for G20, G40, & G50 General Permits):

11C. Name of 2nd alternate operating site:	12C. Address of 2nd alternate operating site: Mailing: _____ Physical: _____

13C. Does the applicant own, lease, have an option to buy, or otherwise have control of the proposed site? 9 **YES** 9 **NO**

– IF **YES**, please explain: _____

– IF **NO**, YOU ARE NOT ELIGIBLE FOR A PERMIT FOR THIS SOURCE.

14C. – For **Modifications or Administrative Updates** at an existing facility, please provide directions to the present location of the facility from the nearest state road;

– For Construction or Relocation permits, please provide directions to the proposed new site location from the nearest state road. Include a **MAP** as **Attachment F.**

15C. Nearest city or town:	16C. County:	17C. UTM Coordinates: Northing (KM): _____ Easting (KM): _____ Zone: _____
18C. Briefly describe the proposed new operation or change (s) to the facility:		19C. Latitude & Longitude Coordinates (NAD83, Decimal Degrees to 5 digits): Latitude: _____ Longitude: _____

20. Provide the date of anticipated installation or change:	21. Date of anticipated Start-up if registration is granted:
April / 15 / 2017 ☐ If this is an **After-The-Fact** permit application, provide the date upon which the proposed change did happen: : ____/____/____	April / 15 / 2017

22. Provide maximum projected **Operating Schedule** of activity/activities outlined in this application if other than 8760 hours/year. (Note: anything other than 24/7/52 may result in a restriction to the facility's operation).

Hours per day 12 Days per week 5 Weeks per year 20 Percentage of operation 30 (The actual batch plant operation is projected to be 20 days @ 12 hours per day.)

SECTION III. ATTACHMENTS AND SUPPORTING DOCUMENTS

23. Include a check payable to WVDEP – Division of Air Quality with the appropriate **application fee** (per 45CSR22 and 45CSR13).

24. Include a **Table of Contents** as the first page of your application package.

All of the required forms and additional information can be found under the Permitting Section (General Permits) of DAQ's website, or requested by phone.

25. Please check all attachments included with this permit application. Please refer to the appropriate reference document for an explanation of the attachments listed below.

9 ATTACHMENT A: CURRENT BUSINESS CERTIFICATE
9 ATTACHMENT B: PROCESS DESCRIPTION
9 ATTACHMENT C: DESCRIPTION OF FUGITIVE EMISSIONS
9 ATTACHMENT D: PROCESS FLOW DIAGRAM
9 ATTACHMENT E: PLOT PLAN
9 ATTACHMENT F: AREA MAP
9 ATTACHMENT G: EQUIPMENT DATA SHEETS AND REGISTRATION SECTION APPLICABILITY FORM
9 ATTACHMENT H: AIR POLLUTION CONTROL DEVICE SHEETS
9 ATTACHMENT I: EMISSIONS CALCULATIONS
9 ATTACHMENT J: CLASS I LEGAL ADVERTISEMENT
9 ATTACHMENT K: ELECTRONIC SUBMITTAL
9 ATTACHMENT L: GENERAL PERMIT REGISTRATION APPLICATION FEE
9 ATTACHMENT M: SITING CRITERIA WAIVER
9 ATTACHMENT N: MATERIAL SAFETY DATA SHEETS (MSDS)
9 ATTACHMENT O: EMISSIONS SUMMARY SHEETS
9 OTHER SUPPORTING DOCUMENTATION NOT DESCRIBED ABOVE (Equipment Drawings, Aggregation Discussion, etc.)

Please mail an original and two copies of the complete General Permit Registration Application with the signature(s) to the DAQ Permitting Section, at the address shown on the front page of this application. Please DO NOT fax permit applications. For questions regarding applications or West Virginia Air Pollution Rules and Regulations, please refer to the website shown on the front page of the application or call the phone number also provided on the front page of the application.

SECTION IV. CERTIFICATION OF INFORMATION

This General Permit Registration Application shall be signed below by a Responsible Official. A Responsible Official is a President, Vice President, Secretary, Treasurer, General Partner, General Manager, a member of a Board of Directors, or Owner, depending on business structure. A business may certify an Authorized Representative who shall have authority to bind the Corporation, Partnership, Limited Liability Company, Association, Joint Venture or Sole Proprietorship. Required records of daily throughput, hours of operation and maintenance, general correspondence, Emission Inventory, Certified Emission Statement, compliance certifications and all required notifications must be signed by a Responsible Official or an Authorized Representative. If a business wishes to certify an Authorized Representative, the official agreement below shall be checked off and the appropriate names and signatures entered. Any administratively incomplete or improperly signed or unsigned Registration Application will be returned to the applicant.

FOR A CORPORATION (domestic or foreign)

G I certify that I am a President, Vice President, Secretary, Treasurer or in charge of a principal business function of the corporation

FOR A PARTNERSHIP

G I certify that I am a General Partner

FOR A LIMITED LIABILITY COMPANY

G I certify that I am a General Partner or General Manager

FOR AN ASSOCIATION

G I certify that I am the President or a member of the Board of Directors

FOR A JOINT VENTURE

G I certify that I am the President, General Partner or General Manager

FOR A SOLE PROPRIETORSHIP

G I certify that I am the Owner and Proprietor

G *I hereby certify that* (please print or type) *N/A*

is an Authorized Representative and in that capacity shall represent the interest of the business (e.g., Corporation, Partnership, Limited Liability Company, Association Joint Venture or Sole Proprietorship) and may obligate and legally bind the business. If the business changes its Authorized Representative, a Responsible Official shall notify the Director of the Office of Air Quality immediately, and/or,

I hereby certify that all information contained in this General Permit Registration Application and any supporting documents appended hereto is, to the best of my knowledge, true, accurate and complete, and that all reasonable efforts have been made to provide the most comprehensive information possible.

Signature (please use blue ink) David Scuillo — Responsible Official — Date 2/17/2017

Name & Title (please print or type) **David Scuillo, Vice President**

Signature (please use blue ink) **N/A** — Authorized Representative (if applicable) — Date

Applicant's Name **Golden Triangle Construction Company, Inc.**

Phone & Fax **(724) 828-2800** (Phone) **(724) 828-2828** (Fax)

Email **info@gtcpgh.com**

RECEIVED
FEB 27 2017
WV DEP / DIV OF AIR QUALITY

Date of Last Application Revision 10/18/2013

Attachment A

Business Registration Certificate

WEST VIRGINIA
STATE TAX DEPARTMENT
BUSINESS REGISTRATION CERTIFICATE

ISSUED TO:
GOLDEN TRIANGLE CONSTRUCTION CO INC
8555 STEUBENVILLE PIKE
IMPERIAL, PA 15126-9194

BUSINESS REGISTRATION ACCOUNT NUMBER: **1022-8460**

This certificate is issued on: 05/6/2011

This certificate is issued by
the West Virginia State Tax Commissioner
in accordance with Chapter 11, Article 12, of the West Virginia Code

The person or organization identified on this certificate is registered to conduct business in the State of West Virginia at the location above.

This certificate is not transferrable and must be displayed at the location for which issued.

This certificate shall be permanent until cessation of the business for which the certificate of registration was granted or until it is suspended, revoked or cancelled by the Tax Commissioner.

Change in name or change of location shall be considered a cessation of the business and a new certificate shall be required.

TRAVELING/STREET VENDORS: Must carry a copy of this certificate in every vehicle operated by them.
CONTRACTORS, DRILLING OPERATORS, TIMBER/LOGGING OPERATIONS: Must have a copy of this certificate displayed at every job site within West Virginia.

all.006 v.3
L1875466856

Attachment B

Process Description

Attachment B - Process Description

Golden Triangle Construction Company, Inc.'s Chester, West Virginia concrete batch plant will operate from April 15th to September 15th, 2017. The facility will generate approximately 14,000 cubic yards of concrete for a nearby highway repair project.

Trucks will deliver the raw material for the concrete (the provided tonnage is for the total life of concrete batch plant for this project at this location):

a) #57 stone (13,950 tons)
b) Sand (9,750 tons)
c) Cement (3,525 tons)
d) Fly Ash (525 tons)

The stone and sand are hauled onto the site over the 0.17 mile unpaved (coarse gravel) haulroad (HR-1) and each is tailgate dumped (TD-1) onto a separate 100 feet by 125 feet (12,500 square feet) stockpile area (OS-1 (stone) and OS-2 (sand)) (See Attachment E – Plot Plan). The stone stockpile (OS-1) will have a water sprinkler system associated with it, while the sand stockpile (OS-2) will not be constructed with a water sprinkler system. The water sprinkler system will be operated on days when the batch plant is operated and when conditions cause fugitive particulate matter to be emitted from the stone stockpile.

The cement and fly ash are hauled onto the site over the same 0.17 mile haulroad, but are pneumatically delivered into enclosed storage (PS-1 and PS-2). A baghouse (APCD-1) associated with the batch plant is used to collect fugitive particulate matter during the delivery of the cement/fly ash.

A front-end loader (FEL-1) is used to transfer the #57 stone and sand into separate Hoppers (H-1). The Hopper (H-1) individually feeds the stone and sand on separate conveyors (C-1) up into the Aggregate Bin (AB-1). The Aggregate Bin (AB-1) stores the stone and sand until allowed to gravity drop (GD-1) into the enclosed Batch Unit (WH-1) to be precisely weighed prior to dropping onto a conveyor (C-2) and delivered to the enclosed Central Mixer (M-1).

The cement and fly ash are transferred from enclosed storage (PS-1 and PS-2) via the enclosed pneumatic feed system and then allowed to gravity drop (PF/GD-1) into the enclosed Batch Unit (WH-2). The cement and fly ash are precisely individually weighed on a scale in the Batch Unit (WH-1) prior to delivery via gravity drop (GD-2) into the enclosed Central Mixer (M-1).

Upon delivery of all ingredients to the Central Mixer (M-1), the drum is rotated to allow the dry contents to become well mixed. Once mixed, 200 gallons of water is injected into the drum to create 10 cubic yards of concrete. The wet concrete does not have potential to create fugitive particulate emissions downstream from this location. Upon complete mixing in the Central Mixer (M-1), the concrete is transferred using a screw feed/gravity drop (SF/GD-1) through a shroud covered chute into an open dump truck (ODT-1) for delivery off-site. The open dump truck (ODT-1) travels the 0.17 mile of unpaved haulroad (HR-1) off site.

Air Pollution Control Devices

The baghouse (APCD-1) associated with the mobile concrete batch plant controls fugitive particulate matter emissions from the following source points at 99.9% efficiency: a) the pneumatic feed (PF-1) at Cement Storage units (PS-1 and PS-2); b) the pneumatic feed and gravity drop (PF/GD-1) of cement and fly ash into the enclosed Batch Unit (WH-2); and c) the gravity drop (GD-1) of cement and fly ash into the enclosed Central Mixer (M-1).

A pressurized water spray truck (WT-1) is used to control fugitive particulate matter emissions on the 0.17 mile unpaved (coarse stone) haulroad (HR-1). The water truck (WT-1) is capable of delivering 350 gpm (0.2 to 0.5 gallons per square yard).

A water sprinkler system (SW-WS) will be installed on the #57 stone stockpile (SP-1) to control fugitive particulate matter emissions from the following: a) truck dump (TD-1), b) stockpile wind erosion (SPWE-1), c) stockpile manipulation (SPM-1), and d) the front-end loader transfer (FEL-1) to the Hopper (H-1).

Water (ST-1) will be added at the Central Mixer (M-1) to create wet concrete from the dry mixture. Approximately 200 gallons of water is added to each 10 cubic yard mix. The addition of water to the mixture essentially reduces any potential to create fugitive particulate matter emissions anywhere downstream of the Central Mixer (M-1).

Many of the material transfers occur within enclosed spaces, thus, reducing the potential for creating fugitive particulate matter emissions. The cement and fly ash are delivered in enclosed trucks and pneumatically fed (PF-1) into enclosed storage (PS-1 and PS-2). The stored cement and fly ash (PS-1 and PS-2) are then transferred via an enclosed pneumatic feed (PF/GD-1) into the enclosed Batch Unit (WH-2). Also, the #57 stone and sand eventually enter into an enclosed Batch Unit (WH-1). Both of these Batch Units (WH-1 and WH-2) transfer the weighed out material into the enclosed Central Mixer (M-1). The Central Mixer (M-1) discharges to open bed tandem trucks through a shroud covered chute.

Attachment C

Description of Fugitive Emission

Attachment C - Description of Fugitive Emissions

1. **Describe all sources and potential sources of fugitive particulate emissions.**
   (Based on 1,200 hours per total length of project)

HR-1a	Unpaved Haulroad, tandem truck delivery of #57 stone (average weight: 24.5 ton, 10 wheels, average payload 23.5 tons, 13,950 tons total project, 594 trips, 0.17 mile/trip, 101 VMT/Project)
HR-1b	Unpaved Haulroad, tandem truck delivery of sand (average weight: 24.5 ton, 10 wheels, average payload 23.5 tons, 9750 tons total project, 415 trips, 0.17 mile/trip, 71 VMT/Project)
HR-1c	Unpaved Haulroad, pneumatic truck delivery of cement (average weight: 30 ton, 18 wheels, average payload 31.2 tons, 3525 tons total project, 113 trips, 0.17 mile/trip, 19 VMT/Project)
HR-1d	Unpaved Haulroad, pneumatic truck delivery of fly ash (average weight: 30 ton, 18 wheels, average payload 31.2 tons, 525 tons total project, 17 trips, 0.17 mile/trip, 3 VMT/Project)
TD-1	Truck Unload, Dump to Stockpiles (SP-1 and SP-2), (sand/stone), 23,700 tons total for project
PF-1	Truck Unload, Pneumatic Delivery to Silos (PS-1 and PS-2) (cement/fly ash), 4,050 tons total for project
SPM-1	Stockpile (SP-1) Manipulation (#57 Stone), Stockpile Area 100 ft. by 125 ft.
SPM-2	Stockpile (SP-2) Manipulation (Sand), Stockpile Area 100 ft. by 125 ft.
SPWE-1	Stockpile (SP-1) Wind Erosion (#57 Stone), Stockpile Area 100 ft. by 125 ft.
SPWE-2	Stockpile (SP-2) Wind Erosion (Sand), Stockpile Area 100 ft. by 125 ft.
FEL-1	Transfer, Front-End Loader Transfer to Hopper (H-1) (#57 Stone/Sand), 20 tons/hour
PF/GD-1	Transfer, Pneumatic Transfer & Gravity Drop to Batch Unit (WH-2) (Cement/Fly Ash), 3.4 tons/hour
C-1	Conveyor (C-1) Transfer, Hopper (H-1) to Aggregate Bin (AB-1), (#57 Stone/Sand), 20 tons/hour
GD-1	Gravity Drop (GD-1), Aggregate Bin (AB-1) to Batch Unit (WH-1) (Stone/Sand), 20 tons/hour
C-2	Conveyor (C-2) Transfer, Batch Unit (WH-1) to Central Mixer (M-1) (Stone/Sand), 20 tons/hour
GD-2	Gravity Drop (GD-2), Batch Unit (WH-2) to Central Mixer (M-1) (Cement/Fly Ash), 3.4 tons/hour

M-1 Central Mixer (M-1), 12 cubic yards concrete per hour

After thoroughly mixing the components, water is introduced into the Central Mixer (M-1) to create concrete (200 gallons of water per 10 cubic yard mix of concrete), therefore, the potential for fugitive particulate matter emissions downstream of this point is insignificant. The wet concrete is transferred from the Central Mixer (M-1) to the concrete truck drum mixer via screw mechanism and gravity.

SF/GD-1 Screw Feed and Gravity Drop (SF/GD-1) Transfer, Central Mixer to Open Tandem Dump Truck (concrete), use shroud covered chute, 12 cubic yards per hour

HR-1e Unpaved Haulroad, tandem truck hauled off-site, concrete, (average weight: 22.9 tons, 10 wheels, average payload: 20.25 tons (10 cubic yards/truck load), 14,000 cubic yards total project, 1,400 trips, 0.17 mile/trip, 238 VMT/Project)

2. Describe all fugitive dust control equipment.

The baghouse (APCD-1) associated with the mobile concrete batch plant controls fugitive particulate matter emissions from the following source points at 99.9% efficiency: a) the pneumatic feed (PF-1) at Cement Storage units (PS-1 and PS-2); b) the pneumatic feed and gravity drop (PF/GD-1) of cement and fly ash into the enclosed Batch Unit (WH-2); and c) the gravity drop (GD-1) of cement and fly ash into the enclosed Central Mixer (M-1).

A pressurized water spray truck (WT-1) is used to control fugitive particulate matter emissions on the 0.17 mile unpaved (coarse stone) haulroad (HR-1). The water truck (WT-1) is capable of delivering 350 gpm (0.2 to 0.5 gallons per square yard).

All trucks entering the property will be tarped and the facility speed limit will be 15 mph.

A water sprinkler system (SW-WS) will be installed on the #57 stone stockpile (SP-1) to control fugitive particulate matter emissions from the following: a) truck dump (TD-1), b) stockpile wind erosion (SPWE-1), c) stockpile manipulation (SPM-1), and d) the front-end loader transfer (FEL-1) to the Hopper (H-1).

Water (ST-1) will be added at the Central Mixer (M-1) to create wet concrete from the dry mixture. Approximately 200 gallons of water is added to each 10 cubic yard mix. The addition of water to the mixture essentially reduces any potential to create fugitive particulate matter emissions anywhere downstream of the Central Mixer (M-1).

Many of the material transfers occur within enclosed spaces, thus, reducing the potential for creating fugitive particulate matter emissions. The cement and fly ash are delivered in enclosed

trucks and pneumatically fed (PF-1) into enclosed storage (PS-1 and PS-2). The stored cement and fly ash (PS-1 and PS-2) are then transferred via an enclosed pneumatic feed (PF/GD-1) into the enclosed Batch Unit (WH-2). Also, the #57 stone and sand eventually enter into an enclosed Batch Unit (WH-1). Both of these Batch Units (WH-1 and WH-2) transfer the weighed out material into the enclosed Central Mixer (M-1). The Central Mixer (M-1) discharges to open bed tandem trucks through a shroud covered chute.

3. **Provide the application rate of water, or if using solution, mix ratio and type used at sprays.**

   The application rate of water on the unpaved haulroad is 350 gpm with 0.2 to 0.5 gallons per square yard.

   The application rate of water for the mixing of concrete is approximately 200 gallons per 10 cubic yards of concrete mix.

   The facility has no plans to use additives in their water sprays.

4. **Provide the application frequency of water or solution to haulroads and work areas during dry periods.**

   As needed to assure dust control.

5. **Describe methods employed to winterize sprays.**

   The facility will not operate during below freezing temperatures. The time frame for the project is April 15, 2017 to September 15, 2017, thus, winterized sprays would not be applicable.

6. **Indicate type of haulroad surface(s) that will be maintained such as asphalt pavement, concrete, dirt, coarse gravel, etc.**

   Coarse gravel

7. **Describe fugitive dust control methods and related equipment for any highwall truck or conveyor dump.**

   There is no highwall truck or conveyor dump planned for this facility.

8. **Describe any other method or practice implemented to minimize fugitive particulate emissions.**

   Please see Attachment C, Item 2 for discussion regarding fugitive particulate matter emission controls.

Attachment D

Process Flow Diagram

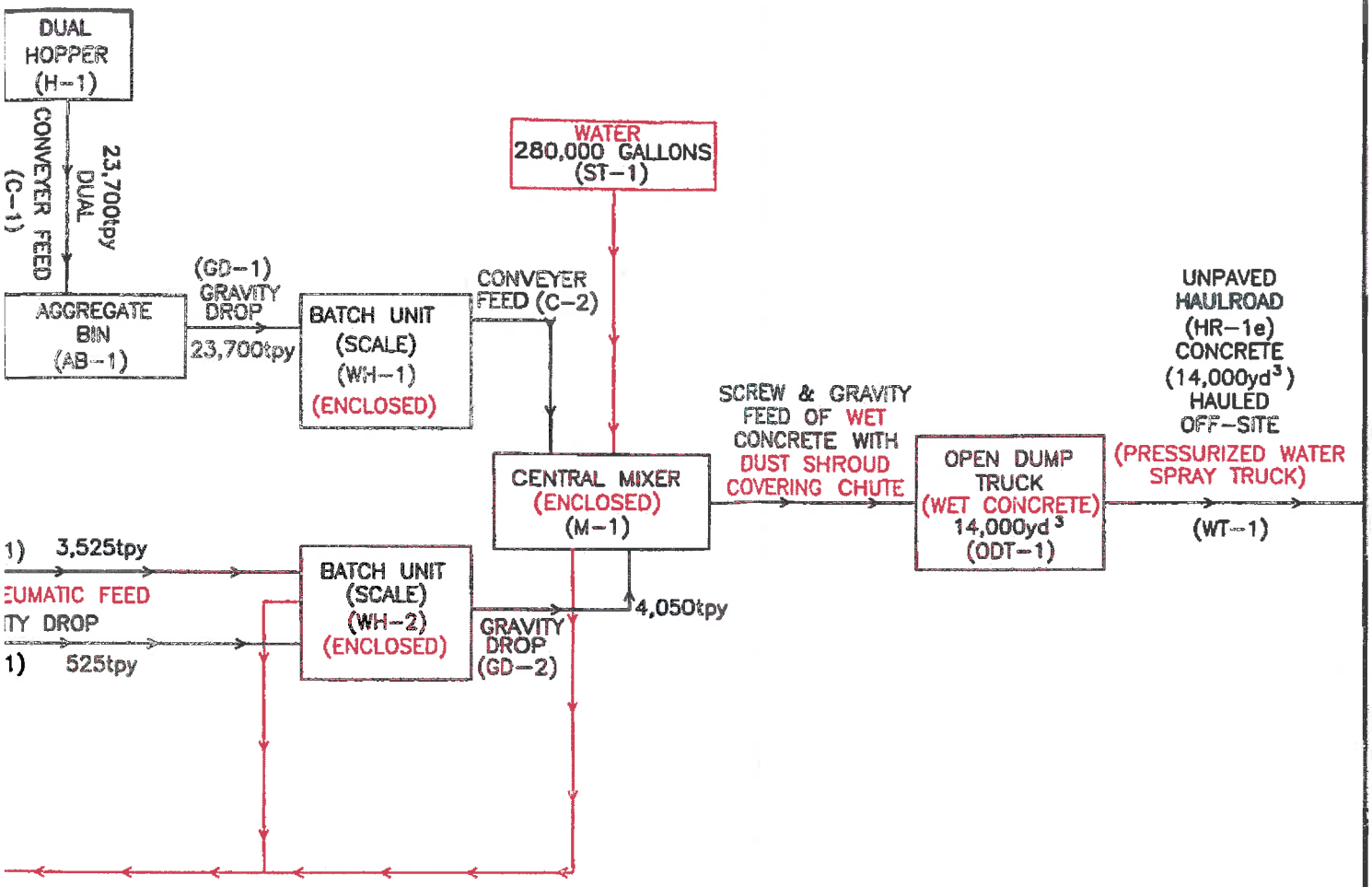

RED INDICATES FUGITIVE EMISSION CONTROL

CONCRETE BATCH PLANT: 360 HOURS (20 DAYS @ 12 HOURS/DAY)

ATTACHMENT D PROCESS FLOW DIAGRAM

INSTALLATION OF MOBILE CONCRETE BATCH PLANT
FOR
GOLDEN TRIANGLE CONSTRUCTION COMPANY, INC.

CHESTER WEST VIRGINIA HANCOCK COUNTY
NEAR U.S. RTE. 30 & S.R. 8 DATE: 2/13/2017

Earthtech, Inc.
Uniontown Office P.O. Box 4-4 Lemont Furnace, PA 15456
Telephone: 724-439-1313 Fax: 724-439-0633
http://www.earthtechinc.net/

Attachment E

Plot Plan

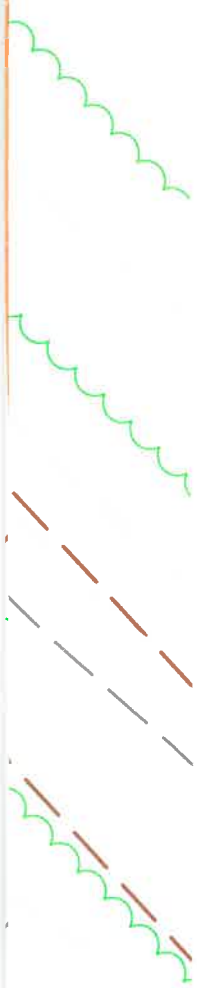

GRAPHIC SCALE

(IN FEET)
1 inch = 100' ft.

SHEET TITLE	ATTACHMENT E
PROJECT	GOLDEN TRIANGLE CONSTRUCTION 8555 OLD STEUBENVILLE PIKE IMPERIAL, PA 15126 CHESTER WV CONCRETE PLANT HANCOCK COUNTY, WV

Earthtech, Inc.
Uniontown Office P.O. Box 4-A Lemont Furnace, PA 15456
Telephone: 724-439-1313 Fax: 724-439-0633
http://www.earthtechinc.net/

SCALE	1"=100
DATE	02-16-2017
SURVEY BY	N/A
DRAWN BY	RT/JAK
CHECKED BY	CL
DWG. FILE NAME	CHESTER CONCRETE PLANT.DWG
SHEET NUMBER	1

ON	BY

Attachment F

Area Map

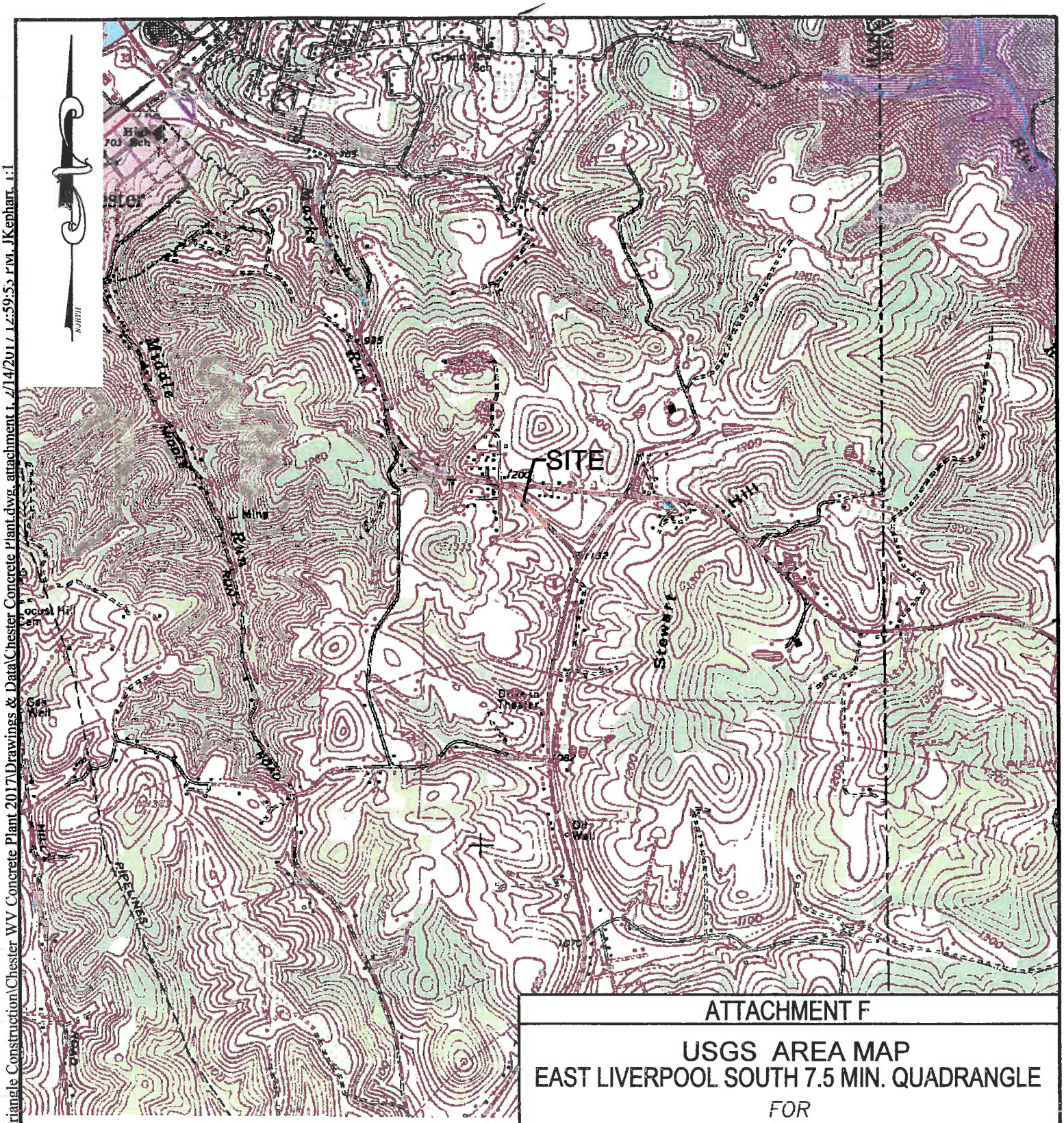

PLANT COORDINATES (NAD 27):
NORTHING: 1679565
EASTING: 765538

GRAPHIC SCALE

0' 2000' 4000' 6000'

1 inch = 2000ft.

ATTACHMENT F

USGS AREA MAP
EAST LIVERPOOL SOUTH 7.5 MIN. QUADRANGLE

FOR

GOLDEN TRIANGLE CONSTRUCTION
CHESTER WV CONCRETE PLANT

HANCOCK COUNTY WEST VIRGINIA

DATE: FEBRUARY 2017

Earthtech, Inc.
Uniontown Office P.O. Box 4-A Lemont Furnace, PA 15456
Telephone: 724-439-1313 Fax: 724-439-0633
http://www.earthtechinc.net/

Attachment G

Affected Source Sheets

CBP PRODUCTION AFFECTED SOURCE SHEET

CBP Production Information	Source Identification Number[1]	WH-1	
	Manufacturer & Model Number	Vince Hagan Co. HT/CM – 12400C-65	
	Date of Manufacture	2014	
	Maximum Design Production Rate[2]	352	tons per hour
	Maximum Annual Production[3]	422,400	tons per year
	Daily Operation	12	hours/day
	Annual Operation	100	days/year
		1,200	hours/year
	Approximate Percentage of Operation from:		Jan - Mar
		50	April - June
		50	July - Sept
			Oct - Dec

1. Enter the appropriate Source Identification Number for each concrete batch plant production weigh hopper or central mixer. Batch plant weigh hopper should be designated WH-1, WH-2, etc. Batch plant central mixer should be designated CM-1, CM-2, etc.

2. Enter the manufacturer's Maximum Design Production Rate of the concrete batch plant production equipment. Specify units in tons/hour.

3. Enter the Maximum Annual Production of the concrete batch plant. Specify units of cubic yards per year or tons per year. To calculate Maximum Annual Production, multiply the Maximum Design Production Rate (tons/hr) by the Annual Operation (hrs/yr).

CBP PRODUCTION AFFECTED SOURCE SHEET

CBP Production Information	Source Identification Number[1]	WH-2	
	Manufacturer & Model Number	Vince Hagan Co. HT/CM – 12400C-65	
	Date of Manufacture	2014	
	Maximum Design Production Rate[2]	59.62	tons per hour
	Maximum Annual Production[3]	71,544	tons per year
	Daily Operation	12	hours/day
	Annual Operation	100	days/year
		1,200	hours/year
	Approximate Percentage of Operation from:		Jan - Mar
		50	April - June
		50	July - Sept
			Oct - Dec

1. Enter the appropriate Source Identification Number for each concrete batch plant production weigh hopper or central mixer. Batch plant weigh hopper should be designated WH-1, WH-2, etc. Batch plant central mixer should be designated CM-1, CM-2, etc.

2. Enter the manufacturer's Maximum Design Production Rate of the concrete batch plant production equipment. Specify units in tons/hour.

3. Enter the Maximum Annual Production of the concrete batch plant. Specify units of cubic yards per year or tons per year. To calculate Maximum Annual Production, multiply the Maximum Design Production Rate (tons/hr) by the Annual Operation (hrs/yr).

CBP PRODUCTION AFFECTED SOURCE SHEET

CBP Production Information	Source Identification Number[1]	M-1	
	Manufacturer & Model Number	Vince Hagan Co. HT/CM – 12400C-65	
	Date of Manufacture	2014	
	Maximum Design Production Rate[2]	446	tons per hour
	Maximum Annual Production[3]	264,000	cubic yards per year
	Daily Operation	12	hours/day
	Annual Operation	100	days/year
		1,200	hours/year
	Approximate Percentage of Operation from:		Jan - Mar
		50	April - June
		50	July - Sept
			Oct - Dec

1. Enter the appropriate Source Identification Number for each concrete batch plant production weigh hopper or central mixer. Batch plant weigh hopper should be designated WH-1, WH-2, etc. Batch plant central mixer should be designated CM-1, CM-2, etc.

2. Enter the manufacturer's Maximum Design Production Rate of the concrete batch plant production equipment. Specify units in tons/hour.

3. Enter the Maximum Annual Production of the concrete batch plant. Specify units of cubic yards per year or tons per year. To calculate Maximum Annual Production, multiply the Maximum Design Production Rate (tons/hr) by the Annual Operation (hrs/yr).

CBP MATERIAL STORAGE & HANDLING AFFECTED SOURCE SHEET

Source Identification Number[1]	OS-1	OS-2	PS-1	PS-2		
Material Stored[2]	#57 Stone	Sand	Cement	Fly Ash		
Maximum Yearly Throughput (tons/year)[3]	13,950	9,750	3,525	525		
Typical Moisture Content (%)[4]	1.5 to 3%	4 to 6%	minimal	minimal		
Average % of Material Passing Through 200 Mesh Sieve[5]	0.74%	1.7%	Approx. 100%	Approx. 100%		
Maximum Stockpile Base Area (ft^2)[6]	12,500	12,500	N/A	N/A		
Maximum Stockpile Height (ft)[7]	15 to 18 feet	15 to 18 feet	N/A	N/A		
Maximum Storage Capacity (tons)[8]	13,950	9,750	140	100		
Dust Control Method Applied to Storage[9]	WS	NO	FE	FE		
Method of Material Load-in to Bin or Stockpile[10]	TD	TD	OT	OT		
Dust Control Method Applied During Load-in[11]	WS	MD	FE	FE		
Method of Material Load-out from Bin or Stockpile[10]	FE	FE	OT	OT		
Dust Control Method Applied During Load-out[11]	WS, MD	MD	FE	FE		

1. Enter the appropriate Source Identification Number for each storage activity using the following codes. For example, if the facility utilizes four open stockpiles and one storage silo, the Source Identification Numbers should be OS-1, OS-2, OS-3, and OS-4, and BS-1, respectively.
   - OS Open Stockpile
   - BS Bin or Storage Silo (full enclosure)
   - SF Stockpiles with wind fences
   - E3 Enclosure (three-sided enclosure)
   - SB Storage Building (full enclosure)
   - OT Other _____ (please specify)
2. Describe the type of material stored or stockpiled.
3. Enter the maximum yearly storage throughput for each storage activity.
4. Enter the average percent moisture content of the stored material.
5. Enter the average percent of material that will pass through a 200 mesh sieve.
6. For stockpiles, enter the maximum stockpile base area.
7. For stockpiles, enter the maximum stockpile height.
8. Enter the maximum storage capacity for each storage activity in tons (e.g. silo capacity, maximum stockpile size, etc.).
9. Enter the dust control method applied to storage activity using the following codes:
   - CA Crusting Agent
   - FE Full Enclosure
   - OT Other _____ (please specify)
   - WS Water Spray
   - NO None
10. Enter the method of load-in or load-out to/from stockpiles or bins using the following codes:
    - FE Front Endloader
    - ST Stacking Tube
    - CS Clamshell
    - OT Other Pneumatic Feed (please specify)
    - SS Stationary Conveyor/Stacker
    - MC Mobile Conveyor/Stacker
    - TD Truck Dump
11. Enter the dust control method applied during load-in or load-out using the following codes:
    - CA Crusting Agent
    - FE Full Enclosure
    - ST Stacking Tube
    - OT Other _____ (please specify)
    - WS Water Spray
    - MD Minimize Drop Height
    - NO None

CBP FUGITIVE DUST CONTROL SYSTEM AFFECTED SOURCE SHEET

Fugitive Dust Control System Data	Fugitive Dust Control Method [1]	WT and WS
	Design Water Flow Rate (gpm) [2]	350 gpm with 0.2 to 0.5 gallons per square yard
	Chemical Additive [3]	N/A
	Water/Additive Mix Ratio [4]	N/A
	Amount (gal/yd) [5]	0.2 to 0.5 gallons per square yard
	Frequency of Application [6]	As needed to assure control of particulate emissions
	Haulroad Surface [7]	Coarse gravel
	Work/Storage Area Surface [8]	Coarse gravel
	Haulroad Length [9]	0.17 mile
	Number of Vehicles per day [10]	2.1 (based on 1.200 hours per year)
	Number of Wheels per Vehicle [11]	4, 10, 18
	Weight of Vehicle (tons) [12]	4.4 tons, 22.9 tons, 24.5 tons, 30 tons

1. Enter the fugitive dust control method(s) using the following codes:
   WT Water Truck WS Fixed Water Sprays
   UW Underbody Truck Wash RS Rumble Strips
   OT Other _____ (please specify)
2. Enter the design water flow rate for the water truck or fixed water sprays in gallons per minute
3. Enter manufacturer and type, specification or grade of chemical additive
4. Enter the water/chemical additive mix ratio.
5. Enter the amount of water or water/chemical additive mix to be applied to haulroads, storage and work areas in gallons per square yard.
6. Enter the frequency of application of water/chemical additive mix to haulroads, storage and work areas during periods of dry weather.
7. Enter the type of haulroad, work and storage area surface (asphalt pavement, concrete, dirt, coarse gravel, reddog, etc.)
8. Enter the approximate length of haulroad(s) in miles or feet. List appropriate units.
9. Enter the maximum daily vehicle traffic (trucks per day).
10. Enter the maximum number of wheels per vehicle.
11. Enter the mean vehicle weight in tons.
12. Complete a separate HMA Plant Fugitive Dust Control System Data sheet for each fugitive dust control system.

Provide a written description of the concrete batch plant's particulate matter capture system below:

A pressurized water spray truck (WT-1) is used to control fugitive particulate matter emissions on the 0.17 mile unpaved (coarse stone) haulroad (HR-1). The water truck (WT-1) is capable of delivering 350 gpm (0.2 to 0.5 gallons per square yard).

All trucks entering the property will be tarped and the facility speed limit will be 15 mph.

A water sprinkler system (SW-WS) will be installed on the #57 stone stockpile (SP-1) to control fugitive particulate matter emissions from the following: a) truck dump (TD-1), b) stockpile wind erosion (SPWE-1), c) stockpile manipulation (SPM-1), and d) the front-end loader transfer (FEL-1) to the Hopper (H-1).

Water (ST-1) will be added at the Central Mixer (M-1) to create wet concrete from the dry mixture. Approximately 200 gallons of water is added to each 10 cubic yard mix. The addition of water to the mixture essentially reduces any potential to create fugitive particulate matter emissions anywhere downstream of the Central Mixer (M-1).

Many of the material transfers occur within enclosed spaces, thus, reducing the potential for creating fugitive particulate matter emissions. The cement and fly ash are delivered in enclosed trucks and pneumatically fed (PF-1) into enclosed storage (PS-1 and PS-2). The stored cement and fly ash (PS-1 and PS-2) are then transferred via an enclosed pneumatic feed (PF/GD-1) into the enclosed Batch Unit (WH-2). Also, the #57 stone and sand eventually enter into an enclosed Batch Unit (WH-1). Both of these Batch Units (WH-1 and WH-2) transfer the weighed out material into the enclosed Central Mixer (M-1). The Central Mixer (M-1) discharges to open bed tandem trucks through a shroud covered chute.

CBP STORAGE TANK AFFECTED SOURCE SHEET

Source Identification Number[1]	Content[2]	Length[3] (ft)	Dia[4] (ft)	Volume[5] (gallons)	Throughput[6] (gal/yr)	Orientation[7]	Liquid Height[8] (ft)
Does Not Apply							

1. Enter the appropriate Source Identification Number for each storage tank located at the concrete batch plant. Storage tanks should be designated T-1, T-2, T-3, etc.
2. Enter storage tank content (#2 fuel oil, asphaltic cement, water, etc.)
3. Enter storage tank length in feet.
4. Enter storage tank diameter in feet.
5. Enter storage tank volume in gallons. Storage tank volume may be calculated using the following mathematical relationship: (length of tank) X (area conversion) X (tank diameter)^2 X (liquid volume conversion) or, (L_{tank} ft) X (3.14/4) X (d^2_{tank} ft^2) X (7.48 gallons/ft^3)
6. Enter storage tank throughput in gallons per year.
7. Enter storage tank orientation using the following codes:
   VERT Vertical Tank HORZ Horizontal Tank
8. Enter storage tank average liquid height in feet.
9. Storage tank emissions may be calculated using TANKS emission calculation program.

Attachment H

Air Pollution Control Device Data Sheet

AIR POLLUTION CONTROL DEVICE AFFECTED SOURCE SHEET

CBP Air Pollution Control Device Data Sheet		Fabric Filter Baghouse	Filter Vent	Fabric Filter Discharge Sock
General Information	APCD Identification Number[1]	APCD-1		
	Manufacturer & Model Number	Vince Hagan, Model 1083-JP		
	Number of Compartments	1 (99 bags)		
	Gas Inlet Area (ft^2)	2.2		
	Gas Outlet Area (ft^2)	2.3		
	Fabric Filter Cleaning Mechanism[2]	Jet pulse		
	Total Cloth (fabric) Area (ft^2)	1083		
	Draft Fan HP	15		
	Outlet Stack Area (ft^2)	N/A		
Operational Parameters	Minimum Design PD (in H_2O)	Not Provided		
	Maximum Design PD (in H_2O)	6		
	Inlet Gas Flow Rate (ACFM)	6500		
	Inlet Gas Temperature (°F)	70		
	Inlet Gas Pressure (PSIA)	Not Provided		
	Inlet Gas Velocity (ft/sec)	Not Provided		
	PM Inlet Rate (grains/scf)	<0.005		
	PM Outlet Rate (grains/scf)	Not Provided		
	Operating Air/Cloth Ratio (ft/min)	6 acfm/ft^2		

1. Enter the appropriate Air Pollution Control Device Identification Number for each fabric filter baghouse, filter vent or discharge sock. The devices should be designated APCD-1, APCD-2, APCD-3, etc.
2. Enter method used to clean bags: shaker, pulse jet, reverse jet or other.
3. Complete more than one CBP Air Pollution Control Device Data Sheet if necessary.
4. Enter the fractional efficiency of the fabric filter baghouse. **99.9%**

CBP PARTICULATE MATTER CAPTURE SYSTEM AFFECTED SOURCE SHEET

Pursuant to Section 2.2.4 of General Permit G50-B, the registrant shall not cause, suffer, allow, or permit any registered concrete batch plant to operate that is not equipped with an effective particulate matter capture system(s) and associated air pollution control device(s) to minimize the emission of particulate matter from production equipment, storage structures and silos. The particulate matter capture system shall ensure the lowest fugitive particulate emissions reasonably achievable.

A particulate matter capture system shall be used to confine, collect, and transport displaced particulate matter from production weigh hoppers, cement and flyash storage structures and/or silos to an air pollution control device. Particulate matter capture systems may include but not be limited to: hoods, bins, ductwork, enclosures and air pollution control devices such as fabric filter baghouses, associated fans, discharge socks and filter vents.

Provide a written description of the concrete batch plant's particulate matter capture system below:

The baghouse (APCD-1) associated with the mobile concrete batch plant controls fugitive particulate matter emissions from the following source points at 99.9% efficiency: a) the pneumatic feed (PF-1) at Cement Storage units (PS-1 and PS-2); b) the pneumatic feed and gravity drop (PF/GD-1) of cement and fly ash into the enclosed Batch Unit (WH-2); and c) the gravity drop (GD-1) of cement and fly ash into the enclosed Central Mixer (M-1). Additional details are provided in the attached manufacturer's literature.

Attachment I

Emission Calculations

G50-B Emission Calculation Spreadsheets

For purposes of the General Permit for concrete batch plants, the following emission calculation methods will provide an adequate estimate of facility emissions from point sources and fugitive emission sources. However, where source (facility) specific tests are available, such information is preferable. Other emission factors may be acceptable provided documentation as to accuracy and appropriateness are provided by the applicant.

Completely fill out the following pages with all requested facility specific information.

Applicant Name Golden Triangle Construction Company, Inc.

Facility Name Chester, WV

Please print out all pages of the completed spreadsheet and submit with Registration Application.

Revised 06/11/2007

General Permit G50-B Emission Calculation Spreadsheet G50ECALC for Concrete Batch Plants

BATCH DROP/CONTINUOUS DROP OPERATIONS

TRANSFER POINT	TRANSFER RATE TPH	TRANSFER RATE TPY	TYPE OF CONTROL	CONTROL EFFICIENCY	PM lb/hour	PM-10 lb/hour	PM TPY	PM-10 TPY
AGGREGATE TRANSFER EMISSIONS								
e=	0.0069 lb/ton (PM emission factor)			e=	0.0033 lb/ton (PM-10 emission factor)			
Dump truck to stockpile	11.6	13,950			0.0800	0.0383	0.0481	0.0230
loader to stockpile	11.6	13,950	UL-WS	50	0.0400	0.0191	0.0241	0.0115
loader to feed hopper	11.6	13,950	UL-WS	50	0.0400	0.0191	0.0241	0.0115
hopper to conveyor	11.6	13,950	TC-WS	70	0.0240	0.0115	0.0144	0.0069
conveyor to bin	11.6	13,950	TC-WS	70	0.0240	0.0115	0.0144	0.0069
bin to scale hopper	11.6	13,950	TC-WS	70	0.0240	0.0115	0.0144	0.0069
conveyor to mixer truck	11.6	13,950	TC-WS	70	0.0240	0.0115	0.0144	0.0069
TOTAL AGGREGATE TRANSFER EMISSIONS					0.2561	0.1225	0.1540	0.0737
SAND TRANSFER EMISSIONS								
e=	0.0021 lb/ton (PM emission factor)			e=	0.0010 lb/ton (PM-10 emission factor)			
Dump truck to stockpile	8.1	9,750			0.0559	0.0267	0.0336	0.0161
loader to stockpile	8.1	9,750			0.0559	0.0267	0.0336	0.0161
loader to feed hopper	8.1	9,750			0.0559	0.0267	0.0336	0.0161
hopper to conveyor	8.1	9,750			0.0559	0.0267	0.0336	0.0161
conveyor to bin	8.1	9,750			0.0559	0.0267	0.0336	0.0161
bin to scale hopper	8.1	9,750			0.0559	0.0267	0.0336	0.0161
conveyor to mixer truck	8.1	9,750			0.0559	0.0267	0.0336	0.0161
TOTAL SAND TRANSFER EMISSIONS					0.3912	0.1871	0.2355	0.1126

BATCH DROP/CONTINUOUS DROP OPERATIONS

TRANSFER POINT	TRANSFER RATE TPH	TRANSFER RATE TPY	TYPE OF CONTROL	CONTROL EFFICIENCY	PM lb/hour	PM-10 lb/hour	PM TPY	PM-10 TPY
CEMENT UNLOADING TO ELEVATED STORAGE SILO (PNEUMATIC)								
e= 0.7200 lb/ton (PM emission factor)				e= 0.4600 lb/ton (PM-10 emission factor)				
truck to cement silo	2.9	3,525	UL-BH	99	0.0209	0.0133	0.0127	0.0081
CEMENT SUPPLEMENT UNLOADING TO ELEVATED STORAGE SILO (PNEUMATIC)								
e= 3.1400 lb/ton (PM emission factor)				e= 1.1000 lb/ton (PM-10 emission factor)				
truck to cement silo	0.44	525	UL-BH	99	0.0032	0.0020	0.0019	0.0012
WEIGH HOPPER LOADING								
e= 0.0051 lb/ton (PM emission factor)				e= 0.0024 lb/ton (PM-10 emission factor)				
silo to cement weigh bin	23	27,750	TC-BH	99	0.1656	0.1058	0.0999	0.0638
MIXER LOADING (CENTRAL MIX)								
e= 0.5440 lb/ton (PM emission factor)				e= 0.1340 lb/ton (PM-10 emission factor)				
cement weigh bin to truck	23	27,750	TC-BH	99	0.1656	0.1058	0.0999	0.0638
TRUCK LOADING (TRUCK MIX)								
e= 0.9950 lb/ton (PM emission factor)				e= 0.2780 lb/ton (PM-10 emission factor)				
cement weigh bin to truck					0.0000	0.0000	0.0000	0.0000
TOTAL CEMENT TRANSFER EMISSIONS					0.3552	0.2270	0.2144	0.1370
TOTAL TRANSFER EMISSIONS					**1.0026**	**0.5366**	**0.6039**	**0.3232**

UNPAVED HAULROADS - Aggregate Truck Sand & gravel

PM EMISSIONS			PM-10 EMISSIONS		
k	4.9	particle size multiplier (assumed)	k	1.5	particle size multiplier (assumed)
s	10	silt in road surface (%)	s	10	silt in road surface (%)
a	0.7	equation constant	a	0.9	equation constant
b	0.45	equation constant	b	0.45	equation constant
S	15	mean vehicle speed (mph)	S	15	mean vehicle speed (mph)
W	24.5	mean vehicle weight (tons)	W	24.5	mean vehicle weight (tons)
w	10	mean number of wheels	w	10	mean number of wheels
p	150	days of precipitation (assumed)	p	150	days of precipitation (assumed)
e	11.0966	LB/VMT	e	3.2753	LB/VMT
TRAVEL	0.1400	VMT/HOUR	TRAVEL	0.1400	VMT/HOUR
TRAVEL	172.0000	VMT/YR	TRAVEL	172.0000	VMT/YR
CONTROLS	70	control efficiency (%)	CONTROLS	70	control efficiency (%)
EMISSIONS	**0.4661**	**lb/hour**	**EMISSIONS**	**0.1376**	**lb/hour**
EMISSIONS	**0.2863**	**TPY**	**EMISSIONS**	**0.0845**	**TPY**

PAVED HAULROADS - Aggregate Trucks Sand & gravel

PM EMISSIONS			PM-10 EMISSIONS		
k	0.082	base emission factor for particle	k	0.016	particle size multiplier (assumed)
sL	70	road surface silt load. (g/m^2)	s	70	silt in road surface (%)
W		mean vehicle weight (tons)	W		mean vehicle weight (tons)
P		# of wet days with at least 0.01" precip	P		# of wet days with at least 0.01" precip
C	0.00047	emission factor for brake/tire wear	C	0.00047	emission factor for brake/tire wear
N	365	# of days in averaging period	N	365	# of days in averaging period
e	-0.0005	LB/VMT	e	-0.0005	LB/VMT
TRAVEL		VMT/HOUR	TRAVEL		VMT/HOUR
TRAVEL		VMT/YR	TRAVEL		VMT/YR
CONTROLS	0	control efficiency (%)	CONTROLS	0	control efficiency (%)
EMISSIONS	**0.0000**	**lb/hour**	**EMISSIONS**	**0.0000**	**lb/hour**
EMISSIONS	**0.0000**	**TPY**	**EMISSIONS**	**0.0000**	**TPY**

UNPAVED HAULROADS - Cement Tanker

PM EMISSIONS			PM-10 EMISSIONS		
k	4.9	particle size multiplier (assumed)	k	1.5	particle size multiplier (assumed)
s	10	silt in road surface (%)	s	10	silt in road surface (%)
a	0.7	equation constant	a	0.9	equation constant
b	0.45	equation constant	b	0.45	equation constant
S	15	mean vehicle speed (mph)	S	15	mean vehicle speed (mph)
W	30	mean vehicle weight (tons)	W	30	mean vehicle weight (tons)
w	18	mean number of wheels	w	18	mean number of wheels
p	150	days of precipitation (assumed)	p	150	days of precipitation (assumed)
e	12.1554	LB/VMT	e	3.5878	LB/VMT
TRAVEL	0.0200	VMT/HOUR	TRAVEL	0.0200	VMT/HOUR
TRAVEL	22.1000	VMT/YR	TRAVEL	22.1000	VMT/YR
CONTROLS	70	control efficiency (%)	CONTROLS	70	control efficiency (%)
EMISSIONS	**0.0729**	**lb/hour**	**EMISSIONS**	**0.0215**	**lb/hour**
EMISSIONS	**0.0403**	**TPY**	**EMISSIONS**	**0.0119**	**TPY**

PAVED HAULROADS - Cement Tanker

PM EMISSIONS			PM-10 EMISSIONS		
k	0.082	base emission factor for particle	k	0.016	particle size multiplier (assumed)
sL	70	road surface silt load. (g/m^2)	s	70	silt in road surface (%)
W		mean vehicle weight (tons)	W		mean vehicle weight (tons)
P		# of wet days with at least 0.01" precip	P		# of wet days with at least 0.01" precip
C	0.00047	emission factor for brake/tire wear	C	0.00047	emission factor for brake/tire wear
N	365	# of days in averaging period	N	365	# of days in averaging period
e	-0.0005	LB/VMT	e	-0.0005	LB/VMT
TRAVEL		VMT/HOUR	TRAVEL		VMT/HOUR
TRAVEL		VMT/YR	TRAVEL		VMT/YR
CONTROLS	0	control efficiency (%)	CONTROLS	0	control efficiency (%)
EMISSIONS	**0.0000**	**lb/hour**	**EMISSIONS**	**0.0000**	**lb/hour**
EMISSIONS	**0.0000**	**TPY**	**EMISSIONS**	**0.0000**	**TPY**

UNPAVED HAULROADS - Concrete Mixer

PM EMISSIONS			PM-10 EMISSIONS		
k	4.9	particle size multiplier (assumed)	k	1.5	particle size multiplier (assumed)
s	10	silt in road surface (%)	s	10	silt in road surface (%)
a	0.7	equation constant	a	0.9	equation constant
b	0.45	equation constant	b	0.45	equation constant
S	15	mean vehicle speed (mph)	S	15	mean vehicle speed (mph)
W	22.9	mean vehicle weight (tons)	W	22.9	mean vehicle weight (tons)
w	10	mean number of wheels	w	10	mean number of wheels
p	150	days of precipitation (assumed)	p	150	days of precipitation (assumed)
e	10.7644	LB/VMT	e	3.1772	LB/VMT
TRAVEL	0.2000	VMT/HOUR	TRAVEL	0.2000	VMT/HOUR
TRAVEL	238.0000	VMT/YR	TRAVEL	238.0000	VMT/YR
CONTROLS	70	control efficiency (%)	CONTROLS	70	control efficiency (%)
EMISSIONS	**0.6459**	**lb/hour**	**EMISSIONS**	**0.1906**	**lb/hour**
EMISSIONS	**0.3843**	**TPY**	**EMISSIONS**	**0.1134**	**TPY**

PAVED HAULROADS - Concrete Mixer

PM EMISSIONS			PM-10 EMISSIONS		
k	0.082	base emission factor for particle	k	0.016	particle size multiplier (assumed)
sL	70	road surface silt load. (g/m^2)	s	70	silt in road surface (%)
W		mean vehicle weight (tons)	W		mean vehicle weight (tons)
P		# of wet days with at least 0.01" precip	P		# of wet days with at least 0.01" precip
C	0.00047	emission factor for brake/tire wear	C	0.00047	emission factor for brake/tire wear
N	365	# of days in averaging period	N	365	# of days in averaging period
e	-0.0005	LB/VMT	e	-0.0005	LB/VMT
TRAVEL		VMT/HOUR	TRAVEL		VMT/HOUR
TRAVEL		VMT/YR	TRAVEL		VMT/YR
CONTROLS	0	control efficiency (%)	CONTROLS	0	control efficiency (%)
EMISSIONS	**0.0000**	**lb/hour**	**EMISSIONS**	**0.0000**	**lb/hour**
EMISSIONS	**0.0000**	**TPY**	**EMISSIONS**	**0.0000**	**TPY**

UNPAVED HAULROADS- Endloader

PM EMISSIONS			PM-10 EMISSIONS		
k	4.9	particle size multiplier (assumed)	k	1.5	particle size multiplier (assumed)
s	10	silt in road surface (%)	s	10	silt in road surface (%)
a	0.7	equation constant	a	0.9	equation constant
b	0.45	equation constant	b	0.45	equation constant
S	10	mean vehicle speed (mph)	S	10	mean vehicle speed (mph)
W	4.4	mean vehicle weight (tons)	W	4.4	mean vehicle weight (tons)
w	4	mean number of wheels	w	4	mean number of wheels
p	150	days of precipitation (assumed)	p	150	days of precipitation (assumed)
e	5.1241	LB/VMT	e	1.5124	LB/VMT
TRAVEL	0.0400	VMT/HOUR	TRAVEL	0.0400	VMT/HOUR
TRAVEL	45.0000	VMT/YR	TRAVEL	45.0000	VMT/YR
CONTROLS	70	control efficiency (%)	CONTROLS	70	control efficiency (%)
EMISSIONS	**0.0615**	**lb/hour**	**EMISSIONS**	**0.0181**	**lb/hour**
EMISSIONS	**0.0346**	**TPY**	**EMISSIONS**	**0.0102**	**TPY**

STORAGE PILE- Sand

PM EMISSIONS			PM-10 EMISSIONS		
s	30	silt content (%)	s	30	silt content (%)
p	150	days of precipitation (assumed)	p	150	days of precipitation (assumed)
f	30.5	time the wind exceeds 12 mph (%)	f	30.5	time the wind exceeds 12 mph (%)
A	0.2900	surface area (acres)	A	0.2900	surface area (acres)
N	1	number of storage piles	N	1	number of storage piles
CONTROLS	0	%	CONTROLS	0	%
EMISSIONS	0.7643	lb/hour	EMISSIONS	0.3592	lb/hour
EMISSIONS	3.3475	TPY	EMISSIONS	1.5733	TPY

STORAGE PILE- Aggregate

PM EMISSIONS			PM-10 EMISSIONS		
s	10	silt content (%)	s	10	silt content (%)
p	150	days of precipitation (assumed)	p	150	days of precipitation (assumed)
f	30.5	time the wind exceeds 12 mph (%)	f	30.5	time the wind exceeds 12 mph (%)
A	0.2900	surface area (acres)	A	0.2900	surface area (acres)
N	1	number of storage piles	N	1	number of storage piles
CONTROLS	75	%	CONTROLS	75	%
EMISSIONS	0.0637	lb/hour	EMISSIONS	0.0299	lb/hour
EMISSIONS	0.2790	TPY	EMISSIONS	0.1311	TPY

EMISSIONS SOURCE SUMMARY

	PM EMISSIONS		PM-10 EMISSIONS	
Point Source Emissions	**lb/hour**	**TPY**	**lb/hour**	**TPY**
Transfer Point Emissions	1.00	0.60	0.54	0.32
Point Source Emissions Total	**1.00**	**0.60**	**0.54**	**0.32**
Fugitive Emissions	**lb/hour**	**TPY**	**lb/hour**	**TPY**
Unpaved Haulroad Emissions	1.25	0.75	0.37	0.22
Paved Haulroad Emissions	0.00	0.00	0.00	0.00
Stockpile Emissions	0.83	3.63	0.39	1.70
Fugitive Emissions Total	**2.07**	**4.37**	**0.76**	**1.92**
FACILITY EMISSIONS TOTAL	**3.08**	**4.98**	**1.29**	**2.25**

Attachment J

Class I Legal Advertisement

Legal Advertisement

Air Quality Permit Notice

Notice of Application

Notice is given that Golden Triangle Construction Company, Inc. has applied to the West Virginia Department of Environmental Protection, Division of Air Quality, for a General Permit G50-B Registration for a concrete batch plant located near the intersection of U.S. Route 30 (Lincoln Highway) and West Virginia S.R. 8, just southeast of Chester, in Hancock County, West Virginia.

The applicant estimates the potential to discharge the following regulated air pollutants: PM_{10}: 2.25 tons per year; and PM: 4.92 tons per year.

Operation start-up is planned to begin on or about the 15th day of April, 2017. Written comments will be received by the West Virginia Department of Environmental Protection, Division of Air Quality, 601 57th Street SE, Charleston, WV 25304, for at least 30 calendar days from the date of publication of this notice.

Any questions regarding this permit application should be directed to the DAQ at (304) 926-0499, extension 1227, during normal business hours.

Dated this 27 day of February, 2017

By: Golden Triangle Construction Company, Inc.

Joe Fischer, Superintendent

8555 Old Steubenville Pike

Imperial, PA 15126

Attachment K

Electronic Submittal

Attachment L

General Permit Registration Application Fee

Attachment M

Siting Criteria Waiver(s)

Siting Criteria Waiver

Division of Air Quality 300' Waiver

I ERNIE WISE (Print Name) hereby

acknowledge and agree that GOLDEN TRIANGLE (General Permit Applicant's Name) will

construct a concrete batch plant

that will be located within 300' of my dwelling.

I hereby offer this waiver of siting criteria to the West Virginia Department of Environmental Protection Division of Air Quality as permission to construct, install and operate in such location.

Signed:

Signature Date 2-13-17

Signature Date 2-13-17

Taken, subscribed and sworn before me this 14 day of February, 2017.

My commission expires: 9/16/17

SEAL Diane C Humersky
Notary Public

COMMONWEALTH OF PENNSYLVANIA
NOTARIAL SEAL
DIANE C HUMERSKY
Notary Public
ROBINSON TWP, WASHINGTON COUNTY
My Commission Expires Sep 16, 2017

Siting Criteria Waiver

Division of Air Quality 300' Waiver

I Clarisa Adkins hereby
Print Name

acknowledge and agree that GOLDEN TRIANGLE will
General Permit Applicant's Name

construct a concrete batch plant

that will be located within 300' of my dwelling.

I hereby offer this waiver of siting criteria to the West Virginia Department of Environmental Protection Division of Air Quality as permission to construct, install and operate in such location.

Signed:

Clarisa Adkins 2-14-17
Signature Date

[illegible] 2-14-17
Signature Date

Taken, subscribed and sworn before me this 14 day of February, 20 17.

My commission expires: 9/16/17

SEAL Diane C Homensky
Notary Public

COMMONWEALTH OF PENNSYLVANIA
NOTARIAL SEAL
DIANE C HOMENSKY
Notary Public
ROBINSON TWP., WASHINGTON COUNTY
My Commission Expires Sep 16, 2017

Siting Criteria Waiver

Division of Air Quality 300' Waiver

I Robert McGaffic hereby
Print Name

acknowledge and agree that GOLDEN TRIANGLE will
General Permit Applicant's Name

construct a concrete batch plant

that will be located within 300' of my dwelling.

I hereby offer this waiver of siting criteria to the West Virginia Department of Environmental Protection Division of Air Quality as permission to construct, install and operate in such location.

Signed:

Robert McGaffic 2-3-17
Signature Date

1-31-17
Signature Date

Taken, subscribed and sworn before me this 7 **day of**

Feb, 20 17.

My commission expires: 9/16/17

SEAL Diane C Humensky
Notary Public

COMMONWEALTH OF PENNSYLVANIA
NOTARIAL SEAL
DIANE C HUMENSKY
Notary Public
ROBINSON TWP., WASHINGTON COUNTY
My Commission Expires Sep 16, 2017

Attachment N

Material Safety Data Sheets (MSDS)

a. #57 Stone
b. Sand
c. Cement
d. Fly Ash
e. Concrete

Material Safety Data Sheet
Required under USDL Safety & Health Regulations
for Standard Employment (29 CFR 1915)

U.S. Department of Labor
Occupational Safety & Health Administration
OMB No. 12180024

Section 1	
Manufacturer's Name The East Fairfield Coal Co.	Emergency Telephone Number (330) 549-2165
Address 10900 South Avenue North Lima, Ohio 44452	Chemical name & Synonyms Calcium Carbonate (Limestone)
	Trade Name Aggregate — Formula CaCO3

Section II - Hazardous Ingredients				
Paints, preservatives & Solvents	%	TVL (Units)	Alloys & Metallic Coatin	% TVL (Units)
Pigments	N/A		Base Metals	N/A
Catalysts	N/A		Alloys	N/A
Vehicle	N/A		Metallic Coatings	N/A
Solvents	N/A		Filler Metal plus	N/A
Additives	N/A		coating or core flux	N/A
Others	N/A		Others	N/A
Hazardous Mixtures of Other Liquids, Solids or Gases				N/A
	N/A			

Section III - Physical Data			
Boiling Point (F)	N/A	Specific Gravity (H2O = 1)	2.0
Vapor Pressure	N/A	Percent Volatile by Volume (%)	N/A
Vapor density (Air=1)	N/A	Evaporation Rate	
Solubility in Water	N/A	(_____ =1)	N/A
Appearance & Odor	Gray molded concrete with cellular construction - no odor		

Section IV - Fire & Explosion Hazard Data		
Flash Point (Method used)	Flammable Limits Lel	Uel
N/A		
Extinguishing Media		
N/A		
Special Fire Fighting Procedures		
N/A		
Unusual Fire & Explosion Hazards		
N/A		

Section V - Hazardous Health Data

ACGIH Threshold Limit Value
N/A - Material is a formed solid

Effects of Overexposure
None. Eye protection should be worn to protect from fine material.

Emergency First Aid Procedures
Excessive handling may cuase skin abrasion; use of gloves is recommended.

Section VI - Reactivity Data

Stability	Unstable		Conditions to Avoid
	Stable	X	

Incompatability (Materials to avoid)
Standard protective measures should be employed during construction to prevent direct contact with aluminum products (i.e. windows, doors, flashing, etc.) to prevent possible corrosion from salts & alkalies from mortar and block.

Hazardous Decomposition Products
N/A

Hazardous Polymerization	May Occur		Conditions to Avoid
	Will Not Occur	X	N/A

Section VII - Spill or Leak Protection

Steps to be Taken in Case Material is Released or Spilled
N/A - Material is a solid.

Waste Disposal Methods
Material will be accepted at any construction demolition site.

Section VIII - Special Protection Information

Respiratory Information (specify type)
N/A - Material is a solid.

Ventilation	Local Exhaust	N/A	Special
	Mechanical	N/A	Other

Protective Gloves Recommended	Eye Protection Recommended

Other Protective equipment
Adequate foot protection (i.e. steel toed shoes) are recommended to prevent injury.

Section IX - Special Precautions

Precautions to be taken in Handling & storing
Use & care & normal safety practices when handling. Avoid excessive surface water runoff to prevent TSS contamination washing off from larger stock piles.

Other precautions

Sand & Gravel SDS

Section 1: Identification

Supplier: Stocker Sand & Gravel
Address: P.O. Box 176 Gnadenhutten, OH 44629
Telephone: 740-254-4635
Website: www.stockerconcrete.com

Section 2: Hazard Identification

Skin irritant Category 3
-Mild Skin Irritation.
Eye Irritant Category 2A or 2B
-Irritant or Mild Irritant

Section 3: Composition

Mixture: Sand & Gravel

Name:	**Wt%**	**CAS No.**
Sand & Gravel	99%	None
Quartz	>1%	14808-60-7

Section 4: First – Aid Measures

Inhalation: If excessive inhalation takes place; remove to fresh air.

Eyes: Flush eyes out with water for 15 minutes. If irritation continues, consult a physician.

Skin: Wash area with water. If necessary, change contaminated clothes.

Ingestion: If ingested, do **not** induce vomiting. Rinse mouth out with fresh potable water. If irritation continues, consult a physician.

Section 5: Fire Fighting Measures

Sand and Gravel is not flammable and is not an explosion hazard.

Section 6: Accidental Release Measures

Spilled material can be cleaned up by sweeping up material. Machinery may also be used to recover larger amounts of accidental spills. If material is dry, excessive dust may develop. The use of N95 respirators or wetting of the material may be used to suppress dust.

Section 7: Handling and Storage

This product is not intended to be used as an abrasive blasting medium. Any use may increase exposure to respirable particles.

Wash hands thoroughly before handling food or beverage.

Section 8: Exposure Controls & Personal Protection

Material	MSHA Permissible Exposure Limit
Sand and Gravel (Nuisance):	10 mg / m^3
Respirable Crystalline Silica (SiO_2 / Quartz)	0.05 mg / m^3

To reduce exposure to dust associated with sand and gravel, slightly wet material to lay down dust. If wetting is not possible, a N95 respirator can be used to reduce exposure.

Section 9: Physical and Chemical Properties

Physical Appearance: Various shades of buff, light to dark.
Odor: No Odor
Solubility in Water: Trace amounts; normally less than 0.1%
Specific Gravity: Varies with partial size: normally between 2.4 to 3.0
Flash Point: Non combustible

Section 10: Stability & Reactivity

Sand and Gravel is chemically stable and not reactive under normal usage, storage and handling.

Section 11: Toxicological Information

Primary Routes of Exposure: Inhalation and contact with eyes and skin
Prolong Exposure: Exposure or over exposure to respirable dust in the sand and gravel may inflame lungs. Pneumoconiosis may develop if exposure if over the PEL limits as listed in Section 8. Wetting down the product or the use of respirators can greatly reduce this risk. Prolong exposure to eyes and skin will cause irritation through physical abrasion.

Section 12: Ecological Information

This product is not expected to be harmful to the environment or aquatic life.

Section 13: Disposal Considerations

Reuse any clean material if possible. Dispose of any unused portion in accordance to local laws and regulations.

Section 14: Transport Information

Sand and Gravel is not a regulated product.

Section 15: Regulatory Information

Sand and Gravel is not a regulated product.

Section 16: Other Information

Information provided in this SDS has been prepared in earnest. Any corrections or modifications in the future will be updated as soon as discrepancies are discovered or new information becomes available.

Safety Data Sheet

Portland Cement

Section 1. Identification

Product Identifier:	Portland Cement
Other means of identification:	Cement, hydraulic cement CEMEX Type I CEMEX Type II CEMEX Type I/II CEMEX Type III CEMEX Type II/V CEMEX Type V CEMEX Type IA CEMEX Type I/II Low Alkali CEMEX Type II Low Alkali CEMEX Type III Low Alkali CEMEX Type V Low Alkali CEMEX Type II/V Low Alkali CEMEX Class A CEMEX Class C CEMEX Class H White Cement
Chemical name:	Calcium compounds, calcium silicate compounds, and other calcium compounds containing iron and aluminum make up the majority of this product.
Relevant Uses:	Building materials, construction application, a basic ingredient in concrete.
Manufacturers Name:	CEMEX
Address:	929 Gessner Road, Suite 1900 Houston TX, 77024 T Customer Care 1-800-99-CEMEX
Emergency telephone number:	CHEMTREC: 1-800-424-9300

Section 2. Hazards Identification

OSHA/HCS status:	This material is considered hazardous by the OSHA Hazard Communication Standard (29 CFR 1910.1200).
Category Classification(s):	SKIN CORROSION/IRRITATION - Category 1 EYE DAMAGE - Category 1 SKIN SENSITIZATION - Category 1 CARCINOGENICITY/INHALATION - Category 1

GHS label elements:

Hazard pictograms:


GHS05


GHS07


GHS08

Signal word:	Danger
Hazard statements:	Causes severe skin burns and eye damage May cause an allergic skin reaction Causes serious eye damage May cause cancer (Inhalation, Dermal).

Safety Data Sheet

Precautionary Statements:

Obtain special instructions before use
Do not handle until all safety precautions have been read and understood
Do not breathe dust
Wash clothing, face, hands thoroughly after handling
Contaminated work clothing must not be allowed out of the workplace
Wear eye protection, protective clothing, protective gloves
If swallowed: rinse mouth. Do NOT induce vomiting
If on skin (or hair): Take off immediately all contaminated clothing. Rinse skin with water/shower
If inhaled: Remove person to fresh air and keep comfortable for breathing
If in eyes: Rinse cautiously with water for several minutes. Remove contact lenses, if present and easy to do. Continue rinsing
If exposed or concerned: Get medical advice/attention
Immediately call a doctor
Specific treatment (see Section 4 on this label)
If skin irritation or rash occurs: Get medical advice/attention
Take off contaminated clothing and wash it before reuse
Wash contaminated clothing before reuse
Dispose of contents/container to comply with local/regional/national regulations

Other Hazards:

Trace amounts of naturally occurring chemicals might be detected during chemical analysis. Trace constituents may include insoluble residue, some of which may be free Quartz (crystalline silica), calcium oxide (Also known as lime or quick lime), magnesium oxide, potassium sulfate, sodium sulfate, chromium compounds, and nickel compounds.

Section 3. Composition / Information on Ingredients

Substance/mixture:

Portland Cement - mixture

Chemical name:

Calcium compounds; calcium silicates and calcium oxides make up the majority of this product – calcium compounds can contain small amounts or iron and aluminum.

Ingredient Name	% Content	CAS number
Portland Cement Clinker	81 - 96	65997-15-1
Gypsum	4 - 9	7778-18-9
Limestone	0 - 5	1317-65-3
Granulated Blast Furnace Slag	0 - 5	65996-69-2
Kiln Bag House Dust	0 – 5	69012-63-1
Lime Kiln Dust	0 – 2	1305-78-8
Quartz (crystalline silica)	0 - 0.1	14808-60-7
Hexavalent chromium*	*	18450-29-9

Any concentration shown as a range is to protect confidentiality or is due to process variation.

*Hexavalent chromium is included due to dermal sensitivity associated with the component.

There are no additional ingredients present which, within the current knowledge of the supplier and in the concentrations applicable, are classified as hazardous to health or the environment and hence require reporting in this section.

Section 4. First-Aid Measures

Description of necessary first aid measures:

General:

Ensure that medical personnel are aware of the material(s) involved and take precautions to protect themselves.

Eye contact:

Get medical attention immediately. Call a poison center or physician. Immediately flush eyes with plenty of water, occasionally lifting the upper and lower eyelids. Check for and remove

Safety Data Sheet

any contact lenses. Continue to rinse for at least 15 minutes. Chemical burns must be treated promptly by a physician.

Inhalation:	Seek medical help if coughing or other symptoms persist. Inhalation of large amounts of Portland Cement requires immediate medical attention. Call a poison center or physician. Remove victim to fresh air and keep at rest in a position comfortable for breathing. If the individual is not breathing, if breathing is irregular or if respiratory arrest occurs, provide artificial respiration or oxygen by trained personnel. It may be dangerous to the person providing aid to give mouth-to-mouth resuscitation. If unconscious, place in recovery position and get medical attention immediately. Maintain an open airway.
Skin contact:	Get medical attention immediately. Heavy exposure to Portland Cement dust, wet concrete or associated water requires prompt attention. Quickly remove contaminated clothing, shoes, and leather goods such as watchbands and belts. Quickly and gently blot or brush away excess Portland Cement. Immediately wash thoroughly with lukewarm, gently flowing water and non-abrasive pH neutral soap. Seek medical attention for rashes, burns, irritation, dermatitis and prolonged unprotected exposures to wet cement, cement mixtures or liquids from wet cement. Burns should be treated as caustic burns.
Ingestion:	Get medical attention immediately. Call a poison center or physician. Have victim rinse mouth thoroughly with water. DO NOT INDUCE VOMITING unless directed to do so by medical personnel. Remove victim to fresh air and keep at rest in a position comfortable for breathing. If material has been swallowed and the exposed person is conscious, give small quantities of water to drink. Have victim drink 60 to 240 mL (2 to 8 oz.) of water. Stop giving water if the exposed person feels sick as vomiting may be dangerous. If vomiting occurs, the head should be kept low so that vomit does not enter the lungs. Chemical burns must be treated promptly by a physician. Never give anything by mouth to an unconscious person. If unconscious, place in recovery position and get medical attention immediately. Maintain an open airway.

Potential symptoms and effects from acute exposures (delayed or immediate):

Eye contact:	Causes serious eye damage.
Inhalation:	May cause respiratory irritation.
Skin contact:	Causes severe burns. Discomfort or pain cannot be relied upon to alert a person to a serious injury. You may not feel pain or the severity of the burn until hours after the exposure. Chemical burns must be treated promptly by a physician. May cause an allergic skin reaction.
Ingestion:	Not expected to be a significant route of entry. May cause burns to mouth, throat and stomach.

Potential symptoms and effects from over-exposures:

Eye contact:	Adverse symptoms may include the following: pain, watering and redness
Inhalation:	Adverse symptoms may include the following: respiratory tract irritation and coughing
Skin contact:	Adverse symptoms may include the following: pain or irritation, redness and blistering may occur, skin burns, ulceration and necrosis may occur
Ingestion:	Adverse symptoms may include the following: stomach pains

Recommendations for immediate medical attention / treatment:

If large quantities have been Ingested or inhaled:	Seek medical treatment and contact poison treatment specialist immediately.
Notes to physician:	Treat symptomatically.
Protection of first-aiders:	No action shall be taken involving any personal risk or without suitable training. It may be dangerous to the person providing aid to give mouth-to-mouth resuscitation. Wash contaminated clothing thoroughly with water before removing it, or wear gloves.

Safety Data Sheet

Section 5. Fire-fighting Measures

Extinguishing media

Suitable extinguishing media:	Non-flammable. Use an extinguishing agent suitable for the surrounding fire.
Specific hazards arising from the chemical:	No specific fire or explosion hazard.
Hazardous thermal decomposition products:	Decomposition products may include the following materials: carbon dioxide, carbon monoxide, sulfur oxides and metal oxide/oxides products:
Special protective actions for firefighters:	Evacuate area. Fight fire with normal precautions from a reasonable distance. Move containers from fire area if this can be done without risk.
Special protective equipment for fire-fighters:	Positive pressure self-contained breathing apparatus (SCBA) and structural firefighters' protective clothing will provide adequate protection.

Section 6. Accidental Release Measures

Personal precautions, protective equipment and emergency procedures

No action shall be taken involving any personal risk or without suitable training. Wear appropriate respirator when ventilation is inadequate. Put on appropriate personal protective equipment. For personal protective clothing requirements, please see Section 8.

For non-emergency personnel:	Evacuate area, if necessary. Contact emergency personnel, if needed. Do not breathe dust. Stay upwind.
For emergency responders:	Evacuate surrounding areas if necessary. Keep unnecessary and unprotected personnel from entering. Do not breathe dust. Provide adequate ventilation.
Environmental precautions:	Avoid release to the environment. Contain the spill to avoid the discharge of spilled material into drains, surface waters and/or groundwater. If the spilled material enters any drainage systems, surface waters and/or groundwater, follow all applicable local, state and federal laws and regulations for additional clean-up and/or reporting requirements.

Methods and materials for containment and cleaning up

Small and large spills:	Wear appropriate personal protective equipment as described in Section 8 for cleaning, containing and removing the spill. Minimize generation of dust. For small spills, clean with a vacuum with a filtration system sufficient to remove and prevent recirculation of cement dust (a vacuum equipped with a high-efficiency particulate air (HEPA) filter is recommended). For large spills, use control dust measures and carefully scoop or shovel into clean dry container for later reuse or disposal. DO NOT USE COMPRESSED AIR TO CLEAN SPILLS. Note: see Section 1 for emergency contact information and Section 13 for waste disposal.

Section 7. Handling and Storage

Precautions for safe handling

Protective measures:	Put on appropriate personal protective equipment (see Section 8). Persons with a history of skin sensitization problems should not be employed in any process in which this product is used. Avoid exposure by obtaining and following special instructions before use. Do not handle until all safety precautions have been read and understood. Do not get in eyes or on skin or clothing. Do not breathe dust. Do not ingest. Use only with adequate ventilation. Wear appropriate respirator when ventilation is inadequate.
Advice on general	Eating, drinking and smoking should be prohibited in areas where this material is handled,

Safety Data Sheet

occupational hygiene: stored and processed. Workers should wash hands and face before eating, drinking and smoking.

Conditions for safe storage: Store and handle in accordance with all current regulations and standards. Keep separated from incompatible substances.

Section 8. Exposure Controls / Personal Protection

Occupational Exposure Limits

Ingredient name	Exposure limits
Portland Cement Clinker	ACGIH TLV (United States, 3/2012). TWA: 1 mg/m^3 8 hours. Form: Respirable NIOSH REL (United States, 6/2009). TWA: 5 mg/m^3 10 hours. Form: Respirable TWA: 10 mg/m3 10 hours. Form: Total OSHA PEL (United States, 6/2010). TWA: 5 mg/m^3 8 hours. Form: Respirable TWA: 15 mg/m^3 8 hours. Form: Total
Quartz (crystalline silica)	ACGIH TLV (United States, 3/2012). TWA: 0.025 mg/m^3 8 hours. Form: Respirable NIOSH REL (United States, 6/2009). TWA: 0.05 mg/m^3 8 hours. Form: Respirable OSHA PEL Z-3 (United States, 9/2005). TWA: 10mg/m^3 divided by %SiO2 + 2: Respirable TWA: 30mg/m^3 divided by %SiO2 + 2: Total
Limestone	ACGIH TLV (United States, 3/2012). TWA: 10 mg/m^3 8 hours. Form: Total NIOSH REL (United States, 6/2009). TWA: 5 mg/m^3 10 hours. Form: Respirable TWA: 10 mg/m^3 10 hours. Form: Total Dust OSHA PEL (United States, 6/2010). TWA: 5 mg/m^3 8 hours. Form: Respirable TWA: 15 mg/m^3 8 hours. Form: Total dust
Gypsum	ACGIH TLV (United States, 3/2012) TWA: 10 mg/m^3 8 hours. Form: Respirable NIOSH REL (United States, 6/2009) TWA 5 mg/m^3 8 hours. Form: Respirable TWA 10 mg/m^3 8 hours. Form: Total OSHA PEL Z-1 (United States, 2/2006) TWA 5 mg/m^3 8 hours. Form: Respirable TWA 15 mg/m^3 8 hours. Form: Total
Particulates Not Otherwise Regulated (Total Dust)	ACGIH TLV (United States, 3/2012) TWA: 3 mg/m^3 8 hours. Form: Respirable TWA: 10 mg/m^3 8 hours. Form: Total dust OSHA PEL (United States, 6/2010). TWA: 5mg/m^3 8 hours. Form: Respirable TWA: 15 mg/m^3 8 hours. Form: Total dust

Controls

Appropriate engineering controls: Use only with adequate ventilation. If user operations generate dust, use process enclosures, local exhaust ventilation or other engineering controls to keep worker exposure to airborne contaminants below any recommended or statutory limits.

Safety Data Sheet

Environmental exposure controls:	Emissions from ventilation or work process equipment should be checked to ensure they comply with the requirements of environmental protection legislation.

Hygiene

Wash	Clean water should always be readily available for skin and (emergency) eye washing. Periodically wash areas contacted by Portland Cement with a pH neutral soap and clean, uncontaminated water. If clothing becomes saturated with Portland Cement, garments should be removed and replaced with clean, dry clothing. Remove protective equipment and saturated clothing before entering eating areas.

PPE

Eye/face protection:	To prevent eye contact, wear safety glasses with side shields, safety goggles or face shields when handling dust or wet cement. Wearing contact lenses when working with cement is not recommended.
Hand protection:	Use impervious, waterproof, and alkali-resistant gloves. Do not rely on barrier creams in place of impervious gloves. Do not get Portland Cement inside gloves. Recommended material: Nitrile®
Body protection:	Use impervious, waterproof, abrasion and alkali-resistant boots and protective long-sleeved and long- legged clothing to protect the skin from contact with wet Portland Cement. To reduce foot and ankle exposure, wear impervious boots that are high enough to prevent Portland Cement from getting inside them. Do not get Portland Cement inside boots, shoes, or gloves. Remove clothing and protective equipment that becomes saturated with cement and immediately wash exposed areas of the body.
Other skin protection:	Appropriate footwear and any additional skin protection measures should be selected based on the task being performed and the risks involved. Footwear and other gear to protect the skin should be approved by a specialist before handling this product.
Respiratory protection:	Use a properly fitted, particulate filter respirator complying with an approved standard if a risk assessment indicates this is necessary. Respirator selection must be based on known or anticipated exposure levels, the hazards of the product, and assigned protection factor of the selected respirator.

Section 9. Physical and Chemical Properties

Physical State:	Solid. [Powder.]	Lower and upper explosive (flammable) limits:	Not applicable.
Color:	Gray or white.	Vapor pressure:	Not applicable.
Odor:	Odorless.	Vapor density:	Not applicable.
Odor threshold:	Not available	Relative density:	2.7 to 3.15
pH (in water):	12 - 13	Solubility:	Slightly soluble in water.
Melting point:	Not available	Solubility in water:	0.1 to 1%
Boiling point:	>1000°C (>1832°F)	Partition coefficient: n-octanol/water:	Not applicable.
Flash point:	Not flammable. Not combustible.	Auto-ignition temperature:	Not applicable.
Burning time:	Not available.	Decomposition temperature:	Not available.
Burning rate:	Not available.	SADT:	Not available.
Evaporation rate:	Not applicable.	Viscosity:	Not applicable.

Safety Data Sheet

Flammability (solid, gas): Not applicable.

Section 10. Stability and Reactivity

Reactivity: Reacts slowly with water forming hydrated compounds, releasing heat and producing a strong alkaline solution until reaction is substantially complete.

Chemical stability: The product is stable.

Possibility of hazardous reactions: Under normal conditions of storage and use, hazardous reactions will not occur.

Conditions to avoid: No specific data.

Incompatible materials: Reactive or incompatible with the following materials: oxidizing materials, acids, aluminum and ammonium salt. Portland Cement is highly alkaline and will react with acids to produce a violent, heat-generating reaction. Toxic gases or vapors may be given off depending on the acid involved. Reacts with acids, aluminum metals and ammonium salts. Aluminum powder and other alkali and alkaline earth elements will react in wet mortar or concrete, liberating hydrogen gas. Limestone ignites on contact with fluorine and is incompatible with acids, alum, ammonium salts, and magnesium. Silica reacts violently with powerful oxidizing agents such as fluorine, boron trifluoride, chlorine trifluoride, manganese trifluoride, and oxygen difluoride yielding possible fire and/or explosions. Silicates dissolve readily in hydrofluoric acid producing a corrosive gas — silicon tetrafluoride.

Hazardous decomposition products: Under normal conditions of storage and use, hazardous decomposition products should not be produced.

Section 11. Toxicological Information

Toxicological Effects

Acute toxicity: Portland Cement LD50/LC50 = Not available

Irritation/Corrosion: Skin: May cause serious burns in the presence of moisture.
Eyes: Causes serious eye damage. May cause burns in the presence of moisture.
Respiratory: May cause respiratory tract irritation.

Sensitization: May cause sensitization due to the potential presence of trace amounts of hexavalent chromium.

Mutagenicity: Not classified.

Reproductive toxicity: Not classified.

Teratogenicity: Not classified.

Aspiration hazard: Not classified.

Carcinogenicity Classification.

Ingredient	OSHA	IARC	ACGIH	NTP
Portland Cement Clinker	–	–	A4	–
Quartz (crystalline silica)	–	1	A2	Known to be a human carcinogen.

Specific target organ toxicity (single exposure): Product Not Classified

Ingredient	Category	Route of Exposure	Target Organs
Quartz (crystalline silica)	Category 3	Inhalation	Respiratory tract irritation

Safety Data Sheet

Specific target organ toxicity (repeated exposure): Product Not Classified

Ingredient	Category	Route of Exposure	Target Organs
Quartz (crystalline silica)	Category 2	Inhalation	Respiratory tract and kidneys

Routes of exposure - Dermal contact, Eye contact, Inhalation, and Ingestion.

Potential acute health effects:

Eye contact: Causes serious eye damage.
Inhalation: May cause respiratory irritation.
Skin contact: Causes severe burns. May cause an allergic skin reaction.
Ingestion: May cause burns to mouth, throat and stomach.

Symptoms related to the physical, chemical and toxicological characteristics:

Eye contact: Adverse symptoms may include the following: pain, watering, redness
Inhalation: Adverse symptoms may include the following: respiratory tract irritation, coughing
Skin contact: Adverse symptoms may include the following: pain or irritation, redness, blistering may occur, skin burns, ulcerations and necrosis may occur
Ingestion: Adverse symptoms may include the following: stomach pains

Delayed and immediate effects and also chronic effects from short and long term exposure:

Short term exposure
Potential immediate effects: No known significant effects or critical hazards.
Potential delayed effects: No known significant effects or critical hazards.

Long term exposure
Potential immediate effects: No known significant effects or critical hazards.
Potential delayed effects: No known significant effects or critical hazards.

Potential chronic health effects:

General: Repeated or prolonged inhalation of dust may lead to chronic respiratory irritation. If sensitized to hexavalent chromium, a severe allergic dermal reaction may occur when subsequently exposed to very low levels.

Carcinogenicity: Quartz (crystalline silica) is considered a hazard by inhalation. IARC has classified Quartz (crystalline silica) as a Group 1 substance, carcinogenic to humans. This classification is based on the findings of laboratory animal studies (inhalation and implantation) and epidemiology studies that were considered sufficient for carcinogenicity. Excessive exposure to Quartz (crystalline silica) can cause silicosis, a non-cancerous lung disease.

Mutagenicity: No known significant effects or critical hazards.

Teratogenicity: No known significant effects or critical hazards.

Developmental effects: No known significant effects or critical hazards.

Fertility effects: No known significant effects or critical hazards.

Numerical measures of toxicity: There are no data available - acute toxicity estimates.

Section 12. Ecological

Toxicity

Persistence and degradability: There are no data available.

Bioaccumulation potential: There are no data available.

Mobility in soil: Soil/water partition coefficient (Koc): Not available.

Other adverse effects: No known significant effects or critical hazards.

Ecotoxicity: No recognized unusual toxicity to plants or animals

Section 13. Disposal Considerations

Safety Data Sheet

Disposal methods: Salvage spilled cement material where possible. Uncontaminated cement material may be reused. Dispose of waste material in accordance with local, state and federal laws and regulations.

Section 14. Transport Information

Special precautions for user: Ensure that persons transporting the product know what to do in the event of an accident or spillage.

Transport in bulk according to Annex II of MARPOL 73/ 78 and the IBC Code: Not Regulated.

Transport Parameters	DOT Classification	IMDG	IATA
UN Number	Not Regulated	Not Regulated	Not Regulated
UN Proper Shipping Name	-	-	-
Transport Hazard Class	-	-	-
Packing Group	-	-	-
Environmental Hazard	None	None	None
Additional Information	-	-	-

Section 15. Regulatory Information

Status under USDOL-OSHA Hazard Communication Rule, 29 CFR 1910.1200
This product is considered a "hazardous chemical" under this regulation, and should be part of any hazard communication program.

Status under CERCLA/SUPERFUND 40 CFR 117 and 302
Not listed.

Hazard Category under SARA(Title III), Sections 311 and 312
This product qualifies as a "hazardous substance" with delayed health effects.

Status under SARA (Title III), Section 313
This cement product does not contain Emergency Planning and Community Right to Know (EPCRA") Section 313 chemicals in excess of the applicable de minimis concentration specified in EPCRA Section 313 Section 372.38(a). Trace amounts of naturally occurring chemicals might be detected during chemical analysis.

Status under TSCA (as of May 1997)
The ingredients of this product are listed on the TSCA inventory or are exempt.

Status under the Federal Hazardous Substances Act
This product is a "hazardous substance" subject to statutes promulgated under the subject act.

Status under California Proposition 65
This product contains up to 0.05 percent of chemicals (trace elements) known to the State of California to cause cancer, birth defects or other reproductive harm. California law requires the manufacturer to give the above warning in the absence of definitive testing to prove that the defined risks do not exist.

State Right to Know:
Portland Cement Clinker (65997-15-1)
U.S. - Idaho - Non-Carcinogenic Toxic Air Pollutants - Acceptable Ambient Concentrations
U.S. - New Jersey - Right to Know Hazardous Substance List
U.S. - Washington - Permissible Exposure Limits - TWAs

Safety Data Sheet

Quartz (crystalline silica) (14808-60-7)
U.S. - Idaho - Non-Carcinogenic Toxic Air Pollutants - Acceptable Ambient Concentrations
U.S. - New Jersey - Right to Know Hazardous Substance List
U.S. - Washington - Permissible Exposure Limits - TWAs

Gypsum (7778-18-9)
U.S. - New Jersey - Right to Know Hazardous Substance List

Limestone (1317-65-3)
U.S. - New Jersey - Right to Know Hazardous Substance List
U.S. - Washington - Permissible Exposure Limits - TWAs

Section 16. Other Information

Approval or Revision History

Date of issue (mm/dd/yyyy):	July 1998
Revision:	April 2011 (Michael Tilton)
Revison:	May 2015 - Revised Section(s) per HCS-GHS

Notice to reader

While the information provided in this safety data sheet is believed to provide a useful summary of the hazards of Portland Cement as it is commonly used, the sheet cannot anticipate and provide all of the information that might be needed in every situation. Inexperienced product users should obtain proper training before using this product. In particular, the data furnished in this sheet do not address hazards that may be posed by other materials mixed with Portland Cement to produce Portland Cement products. Users should review other relevant material safety data sheets before working with this Portland Cement or working on Portland Cement products, for example, Portland Cement concrete.

SELLER MAKES NO WARRANTY, EXPRESS OR IMPLIED, CONCERNING THE PRODUCT OR THE MERCHANTABILITY OR FITNESS THEREOF FOR ANY PURPOSE OR CONCERNING THE ACCURACY OF ANY INFORMATION PROVIDED BY CEMEX, Inc. except that the product shall conform to contracted specifications. The information provided herein was believed by CEMEX to be accurate at the time of preparation or prepared from sources believed to be reliable, but it is the responsibility of the user to investigate and understand other pertinent sources of information to comply with all laws and procedures applicable to the safe handling and use of product and to determine the suitability of the product for its intended use. Buyer's exclusive remedy shall be for damages and no claim of any kind, whether as to product delivered or for non-delivery of product, and whether based on contract, breach of warranty, negligence, or otherwise shall be greater in amount than the purchase price of the quantity of product in respect of which damages are claimed. In no event shall Seller be liable for incidental or consequential damages, whether Buyer's claim is based on contract, breach of warranty, negligence or otherwise. In particular, the data furnished in this sheet do not address hazards that may be posed by other materials mixed with Portland Cement to produce Portland Cement products. Users should review other relevant safety data sheets before working with Portland Cement or working on Portland Cement products, for example, Portland Cement concrete

Abbreviations

ACGIH — American Conference of Governmental Industrial Hygienists
CAS — Chemical Abstract Service
CERCLA — Comprehensive Emergency Response and Comprehensive Liability Act
CFR — Code of Federal Regulations DOT — Department of Transportation
GHS – Globally Harmonized System Globally Harmonized System
HEPA - High Efficiency Particulate Air
IATA — International Air Transport Association
IARC — International Agency for Research on Cancer
IMDG — International Maritime Dangerous Goods
NIOSH — National Institute of Occupational Safety and Health
NOEC — No Observed Effect Concentration
NTP — National Toxicology Program
OSHA — Occupational Safety and Health Administration
PEL — Permissible Exposure Limit
REL — Recommended Exposure Limit RQ — Reportable Quantity
SARA — Superfund Amendments and Reauthorization Act
SDS — Safety Data Sheet
TLV — Threshold Limit Value
TPQ — Threshold Planning Quantity

Safety Data Sheet

TSCA — Toxic Substances Control Act
TWA — Time-Weighted Average
UN — United Nations

SECTION 1: IDENTIFICATION

Product Identifier

Product Form: Mixture
Product Name: ProAsh®
Synonyms: Fly Ash
Chemical Family: Bituminous Coal Fly Ash

Intended Use of the Product

Use of the Substance/Mixture: Building materials, construction.

Name, Address, and Telephone of the Responsible Party

Company
Separation Technologies LLC
101 Hampton Ave.
Needham, MA 02494

Emergency Telephone Number CHEMTREC – 800-424-9300

SECTION 2: HAZARDS IDENTIFICATION

Classification of the Substance or Mixture

Classification (GHS-US)

Eye Irrit. 2B H320
STOT SE 3 H335
STOT RE 2 H372

Full text of H-phrases: see section 16

Label Elements

GHS-US Labeling

Hazard Pictograms (GHS-US) :

Signal Word (GHS-US) : Danger

Hazard Statements (GHS-US) :

H320 - Causes eye irritation
H335 - May cause respiratory irritation
H372 - Causes damage to organs through prolonged or repeated exposure.

Precautionary Statements (GHS-US) : P260 - Do not breathe dust.
P264 - Wash hands, forearms, and other exposed areas thoroughly after handling.
P280 - Wear protective gloves, protective clothing, and eye protection.
P305+P351+P338 - IF IN EYES: Rinse cautiously with water for several minutes. Remove contact lenses, if present and easy to do. Continue rinsing.
P308+P313 - If exposed or concerned: Get medical advice/attention.
P314 - Get medical advice/attention if you feel unwell.
P501 - Dispose of contents/container in accordance with local, regional, national, territorial, provincial, and international regulations.

* Fly ash and other coal combustion products (CCPs) are UVCB substances (substance of unknown or variable composition or biological. Various CCPs, noted as Ashes; Ash; Ash residues; Ashes, residues, bottom; Bottom ash; Bottom ash residues; Waste solids, ashes under TSCA are defined by the US EPA as: "The residuum from the burning of a combination of carbonaceous materials. The following elements may be present as oxides: aluminum, calcium, iron, magnesium, nickel, phosphorus, potassium, silicon, sulfur, titanium, and vanadium." Ashes including fly ash and fluidized bed combustion ash are identified by CAS number 68131-74-8. The exact composition of the ash is dependent on the fuel

source and flue additives composed of a large number of constituents. The classification of the final substance is dependent on the presence of specific identified oxides as well as other trace elements.

Unknown Acute Toxicity (GHS-US) Not available

SECTION 3: COMPOSITION/INFORMATION ON INGREDIENTS

Mixture

Name	Product Identifier	% (w/w)
Ashes, residues	(CAS No) 68131-74-8	100
Contains (Name)	**Product Identifier**	**% (w/w)**
Silica, amorphous	(CAS No) 7631-86-9	60 - 90
Iron oxide (Fe2O3)	(CAS No) 1309-37-1	1 - 20
Calcium oxide	(CAS No) 1305-78-8	0 - 10
Carbon	(CAS No) 7440-44-0	0 - 6
Quartz	(CAS No) 14808-60-7	1 - 3

Full text of H-phrases: see section 16

*The specific chemical identity and/or exact percentage of composition have been withheld as a trade secret within the meaning of the OSHA Hazard Communication Standard [29 CFR 1910.1200].

**A range of concentration as prescribed by Controlled Products Regulations has been used where necessary, due to varying composition.

***More than one of the ranges of concentration prescribed by Controlled Products Regulations has been used where necessary, due to varying composition.

SECTION 4: FIRST AID MEASURES

Description of First Aid Measures

General: Never give anything by mouth to an unconscious person. If you feel unwell, seek medical advice (show the label if possible).

Inhalation: Remove to fresh air and keep at rest in a position comfortable for breathing. Obtain medical attention if breathing difficulty persists.

Skin Contact: Rinse immediately with plenty of water. Obtain medical attention if irritation develops or persists.

Eye Contact: Rinse cautiously with water for several minutes. Remove contact lenses, if present and easy to do. Continue rinsing for at least 60 minutes. Seek medical attention if irritation persists or later develops.

Ingestion: Do not induce vomiting. Rinse mouth. Seek medical attention if any problems arise.

Most Important Symptoms and Effects Both Acute and Delayed

General: Causes serious eye damage. Causes damage to organs through prolonged or repeated exposure.

Inhalation: Repeated exposure to respirable (airborne) crystalline silica dust will cause lung damage in the form of silicosis.

Skin Contact: Repeated or prolonged skin contact may cause irritation.

Eye Contact: Causes serious eye damage. Symptoms may include: Redness. Pain. Blurred vision. Severe burns.

Ingestion: Ingestion is likely to be harmful or have adverse effects.

Chronic Symptoms: Causes damage to organs through prolonged or repeated exposure. Repeated or prolonged exposure to respirable (airborne) crystalline silica dust will cause lung damage in the form of silicosis. Symptoms will include progressively more difficult breathing, cough, fever, and weight loss.

Indication of Any Immediate Medical Attention and Special Treatment Needed

If you feel unwell, seek medical advice (show the label where possible).

SECTION 5: FIRE-FIGHTING MEASURES

Extinguishing Media

Suitable Extinguishing Media: No fire hazard present for this material.

Unsuitable Extinguishing Media: No fire hazard present for this material.

Special Hazards Arising From the Substance or Mixture

Fire Hazard: Not flammable.

Explosion Hazard: Product is not explosive.

Reactivity: Hazardous reactions will not occur under normal conditions.

Advice for Firefighters

Precautionary Measures Fire: No fire hazard present for this material.

Firefighting Instructions: No fire hazard present for this material.
Protection During Firefighting: Do not enter fire area without proper protective equipment, including respiratory protection.
Hazardous Combustion Products: None known.

Reference to Other Sections

Refer to section 9 for flammability properties.

SECTION 6: ACCIDENTAL RELEASE MEASURES

Personal Precautions, Protective Equipment and Emergency Procedures

For Non-Emergency Personnel

Protective Equipment: Use appropriate personal protection equipment (PPE).
Emergency Procedures: Evacuate unnecessary personnel.

For Emergency Personnel

Protective Equipment: Equip cleanup crew with proper protection.
Emergency Procedures: Stop spill if safe to do so.

Environmental Precautions

Prevent contamination of drains or waterways and dispose according to local and national regulations.

Methods and Material for Containment and Cleaning Up

For Containment: Contain and collect as any solid.
Methods for Cleaning Up: Clean up spills immediately and dispose of waste safely. Spills should be contained with mechanical barriers. Transfer spilled material to a suitable container for disposal. Contact competent authorities after a spill. Utilize a dust suppressant when removing mechanically. Avoid generation of dust during clean-up of spills.

Reference to Other Sections

See Heading 8. Exposure controls and personal protection. For further information refer to section 13.

SECTION 7: HANDLING AND STORAGE

Precautions for Safe Handling

Additional Hazards When Processed: Do not breathe dust.
Hygiene Measures: Handle in accordance with good industrial hygiene and safety procedures. Wash hands and other exposed areas with mild soap and water before eating, drinking or smoking and when leaving work.

Conditions for Safe Storage, Including Any Incompatibilities

Technical Measures: Comply with applicable regulations. Good housekeeping is needed during storage, transfer, handling, and use of this material to avoid excessive dust accumulation.
Storage Conditions: Store in a dry, cool and well-ventilated place. Keep container closed when not in use. Keep/Store away from incompatible materials. Store away from oxidizers, combustible materials, and all ignition sources.
Incompatible Materials: Strong acids. Strong bases. Strong oxidizers.

Specific End Use(s)

Building materials, construction.

SECTION 8: EXPOSURE CONTROLS/PERSONAL PROTECTION

Control Parameters

For substances listed in section 3 that are not listed here, there are no established Exposure limits from the manufacturer, supplier, importer, or the appropriate advisory agency including: ACGIH (TLV), NIOSH (REL), OSHA (PEL), Canadian provincial governments, or the Mexican government

Silica, amorphous (7631-86-9)		
USA OSHA	OSHA PEL (TWA) (mg/m³)	6 mg/m³
USA OSHA	OSHA PEL (TWA) (ppm)	20 mppcf (80mg/m³/%SiO_2)
USA NIOSH	NIOSH REL (TWA) (mg/m³)	6 mg/m³
USA IDLH	US IDLH (mg/m³)	3000 mg/m³
Nunavut	OEL TWA (mg/m³)	2 mg/m³ (respirable mass) 5 mg/m³ (total mass) 0.05 mg/m³ (regulated under Silica flour-respirable mass) 0.15 mg/m³ (regulated under Silica flour, total mass)
Northwest Territories	OEL TWA (mg/m³)	2 mg/m³ (respirable mass) 5 mg/m³ (total mass)

		0.05 mg/m³ (regulated under Silica flour-respirable mass) 0.15 mg/m³ (total mass, regulated under Silica flour)
Yukon	OEL TWA (mg/m³)	300 particle/mL (as measured by Konimeter instrumentation) 20 mppcf (as measured by Impinger instrumentation) 2 mg/m³ (respirable mass)
Quartz (14808-60-7)		
Mexico	OEL TWA (mg/m³)	0.1 mg/m³ (respirable fraction)
USA ACGIH	ACGIH TWA (mg/m³)	0.025 mg/m³ (respirable fraction)
USA ACGIH	ACGIH chemical category	A2 - Suspected Human Carcinogen
USA OSHA	OSHA PEL (STEL) (mg/m³)	250 mppcf/%SiO_2+5, 10mg/m³/%SiO_2+2
USA NIOSH	NIOSH REL (TWA) (mg/m³)	0.05 mg/m³ (respirable dust)
USA IDLH	US IDLH (mg/m³)	50 mg/m³ (respirable dust)
Alberta	OEL TWA (mg/m³)	0.025 mg/m³ (respirable particulate)
British Columbia	OEL TWA (mg/m³)	0.025 mg/m³ (respirable)
Manitoba	OEL TWA (mg/m³)	0.025 mg/m³ (respirable fraction)
New Brunswick	OEL TWA (mg/m³)	0.1 mg/m³ (respirable fraction)
Newfoundland & Labrador	OEL TWA (mg/m³)	0.025 mg/m³ (respirable fraction)
Nova Scotia	OEL TWA (mg/m³)	0.025 mg/m³ (respirable fraction)
Nunavut	OEL TWA (mg/m³)	0.1 mg/m³ (respirable mass) 0.3 mg/m³ (total mass)
Northwest Territories	OEL TWA (mg/m³)	0.1 mg/m³ (respirable mass) 0.3 mg/m³ (total mass)
Ontario	OEL TWA (mg/m³)	0.10 mg/m³ (designated substances regulation-respirable)
Prince Edward Island	OEL TWA (mg/m³)	0.025 mg/m³ (respirable fraction)
Québec	VEMP (mg/m³)	0.1 mg/m³ (respirable dust)
Saskatchewan	OEL TWA (mg/m³)	0.05 mg/m³ (respirable fraction)
Yukon	OEL TWA (mg/m³)	300 particle/mL
Calcium oxide (1305-78-8)		
Mexico	OEL TWA (mg/m³)	2 mg/m³
USA ACGIH	ACGIH TWA (mg/m³)	2 mg/m³
USA OSHA	OSHA PEL (TWA) (mg/m³)	5 mg/m³
USA NIOSH	NIOSH REL (TWA) (mg/m³)	2 mg/m³
USA IDLH	US IDLH (mg/m³)	25 mg/m³
Alberta	OEL TWA (mg/m³)	2 mg/m³
British Columbia	OEL TWA (mg/m³)	2 mg/m³
Manitoba	OEL TWA (mg/m³)	2 mg/m³
New Brunswick	OEL TWA (mg/m³)	2 mg/m³
Newfoundland & Labrador	OEL TWA (mg/m³)	2 mg/m³
Nova Scotia	OEL TWA (mg/m³)	2 mg/m³
Nunavut	OEL STEL (mg/m³)	4 mg/m³
Nunavut	OEL TWA (mg/m³)	2 mg/m³
Northwest Territories	OEL STEL (mg/m³)	4 mg/m³
Northwest Territories	OEL TWA (mg/m³)	2 mg/m³
Ontario	OEL TWA (mg/m³)	2 mg/m³
Prince Edward Island	OEL TWA (mg/m³)	2 mg/m³
Québec	VEMP (mg/m³)	2 mg/m³
Saskatchewan	OEL STEL (mg/m³)	4 mg/m³
Saskatchewan	OEL TWA (mg/m³)	2 mg/m³
Yukon	OEL STEL (mg/m³)	4 mg/m³
Yukon	OEL TWA (mg/m³)	2 mg/m³

Iron oxide (Fe2O3) (1309-37-1)		
Mexico	OEL TWA (mg/m³)	5 mg/m³
Mexico	OEL STEL (mg/m³)	10 mg/m³
USA ACGIH	ACGIH TWA (mg/m³)	5 mg/m³ (respirable fraction)
USA ACGIH	ACGIH chemical category	Not Classifiable as a Human Carcinogen
USA OSHA	OSHA PEL (TWA) (mg/m³)	10 mg/m³ (fume) 15 mg/m³ (total dust) 5 mg/m³ (respirable fraction)
USA NIOSH	NIOSH REL (TWA) (mg/m³)	5 mg/m³ (dust and fume)
USA IDLH	US IDLH (mg/m³)	2500 mg/m³ (dust and fume)
Alberta	OEL TWA (mg/m³)	5 mg/m³ (respirable)
British Columbia	OEL STEL (mg/m³)	10 mg/m³ (fume)
British Columbia	OEL TWA (mg/m³)	10 mg/m³ (total particulate matter containing no Asbestos and <1% Crystalline silica-total particulate) 3 mg/m³ (particulate matter containing no Asbestos and <1% Crystalline silica-respirable particulate) 5 mg/m³ (dust and fume)
Manitoba	OEL TWA (mg/m³)	5 mg/m³ (respirable fraction)
New Brunswick	OEL TWA (mg/m³)	5 mg/m³ (particulate matter containing no Asbestos and <1% Crystalline silica, dust and fume) 10 mg/m³ (regulated under Rouge-particulate matter containing no Asbestos and <1% Crystalline silica)
Newfoundland & Labrador	OEL TWA (mg/m³)	5 mg/m³ (respirable fraction)
Nova Scotia	OEL TWA (mg/m³)	5 mg/m³ (respirable fraction)
Nunavut	OEL TWA (mg/m³)	5 mg/m³ (respirable mass) 10 mg/m³ (total mass)
Northwest Territories	OEL TWA (mg/m³)	5 mg/m³ (respirable mass) 10 mg/m³ (total mass)
Ontario	OEL TWA (mg/m³)	5 mg/m³ (respirable)
Prince Edward Island	OEL TWA (mg/m³)	5 mg/m³ (respirable fraction)
Québec	VEMP (mg/m³)	5 mg/m³ (dust and fume) 10 mg/m³ (containing no Asbestos and <1% Crystalline silica, regulated under Rouge-total dust)
Saskatchewan	OEL STEL (mg/m³)	10 mg/m³ (dust and fume) 20 mg/m³ (regulated under Rouge)
Saskatchewan	OEL TWA (mg/m³)	5 mg/m³ (dust and fume) 10 mg/m³ (regulated under Rouge)
Yukon	OEL STEL (mg/m³)	10 mg/m³ (fume) 20 mg/m³ (regulated under Rouge)
Yukon	OEL TWA (mg/m³)	5 mg/m³ (fume) 30 mppcf (regulated under Rouge) 10 mg/m³ (regulated under Rouge)

Carbon (7440-44-0)		
Mexico	OEL TWA (mg/m³)	2 mg/m³ (dust)

Exposure Controls

Appropriate Engineering Controls: Ensure adequate ventilation, especially in confined areas. Emergency eye wash fountains and safety showers should be available in the immediate vicinity of any potential exposure. Ensure all national/local regulations are observed.

Personal Protective Equipment: Protective goggles or safety glasses with side shields. Gloves. Protective clothing. Dust formation: dust mask.

Materials for Protective Clothing: Wear suitable materials and fabrics.
Hand Protection: Wear protective gloves.
Eye Protection: Goggles or safety glasses with side shields.
Skin and Body Protection: Wear suitable protective clothing.
Respiratory Protection: Use NIOSH-approved dust mask if dust has the potential to become airborne.
Environmental Exposure Controls: Do not allow the product to be released into the environment.

SECTION 9: PHYSICAL AND CHEMICAL PROPERTIES

Information on Basic Physical and Chemical Properties

Physical State	:	Solid
Appearance	:	Fine grained, gray powder
Odor	:	Odorless*
Odor Threshold	:	Not available
pH	:	Not available
Evaporation Rate	:	Not available
Melting Point	:	Not available
Freezing Point	:	Not available
Boiling Point	:	Not available
Flash Point	:	Not available
Auto-ignition Temperature	:	Not available
Decomposition Temperature	:	Not available
Flammability (solid, gas)	:	Not available
Lower Flammable Limit	:	Not available
Upper Flammable Limit	:	Not available
Vapor Pressure	:	Not available
Relative Vapor Density at 20 °C	:	Not available
Relative Density	:	Not available
Specific Gravity	:	2.0 - 3.0
Solubility	:	Insoluble in water
Partition Coefficient: N-Octanol/Water	:	Not available
Viscosity	:	Not available
Explosion Data – Sensitivity to Mechanical Impact	:	Not expected to present an explosion hazard due to mechanical impact.
Explosion Data – Sensitivity to Static Discharge	:	Not expected to present an explosion hazard due to static discharge.

* The use of urea or aqueous ammonia injected into the flue gas to reduce nitrogen oxides (NOx) emissions may result in the presence of ammonium sulfate or ammonium bisulfate in the ash at less than 0.1%. When ash containing these substances becomes wet under high pH (>9), free ammonia gas may be released resulting in objectionable/nuisance ammonia odor and potential exposure to ammonia gas especially in confined spaces.

SECTION 10: STABILITY AND REACTIVITY

Reactivity: Hazardous reactions will not occur under normal conditions.

Chemical Stability: Stable under recommended handling and storage conditions (see section 7).

Possibility of Hazardous Reactions: The material is a relatively stable, inert material; however, when ash containing ammonia becomes wet under high pH (>9), free ammonia gas may be released resulting in an objectionable/nuisance ammonia odor and potential exposure to ammonia gas especially in confined spaces. Polymerization will not occur.

Conditions to Avoid: Incompatible materials.

Incompatible Materials: None known.

Hazardous Decomposition Products: None known.

SECTION 11: TOXICOLOGICAL INFORMATION

Information on Toxicological Effects - Product

Acute Toxicity: Not classified

LD50 and LC50 Data: Not available

Skin Corrosion/Irritation: Not classified

Serious Eye Damage/Irritation: Causes serious eye damage.

Respiratory or Skin Sensitization: Not classified

Germ Cell Mutagenicity: Not classified

Teratogenicity: Not classified

Carcinogenicity: Not available. Respirable crystalline silica has been identified as a carcinogen by NTP and IARC.

Specific Target Organ Toxicity (Repeated Exposure): Causes damage to organs through prolonged or repeated exposure.

Reproductive Toxicity: Not classified

Specific Target Organ Toxicity (Single Exposure): Not classified

Aspiration Hazard: Not classified

Symptoms/Injuries After Inhalation: Repeated exposure to respirable (airborne) crystalline silica dust will cause lung damage in the form of silicosis.

Symptoms/Injuries After Skin Contact: Repeated or prolonged skin contact may cause irritation.

Symptoms/Injuries After Eye Contact: Causes serious eye damage. Symptoms may include: Redness. Pain. Blurred vision. Severe burns.

Symptoms/Injuries After Ingestion: Ingestion is likely to be harmful or have adverse effects.

Chronic Symptoms: Causes damage to organs through prolonged or repeated exposure. Repeated or prolonged exposure to respirable (airborne) crystalline silica dust will cause lung damage in the form of silicosis. Symptoms will include progressively more difficult breathing, cough, fever, and weight loss.

Information on Toxicological Effects - Ingredient(s)

LD50 and LC50 Data:

Ashes, residues (68131-74-8)	
LD50 Oral Rat	> 2000 mg/kg
Silica, amorphous (7631-86-9)	
LD50 Oral Rat	> 5000 mg/kg
LD50 Dermal Rabbit	> 2000 mg/kg
LC50 Inhalation Rat	> 2.2 mg/l (Exposure time: 1 h)
Quartz (14808-60-7)	
LD50 Oral Rat	> 5000 mg/kg
LD50 Dermal Rat	> 5000 mg/kg
Calcium oxide (1305-78-8)	
LD50 Oral Rat	> 2000 mg/kg
LD50 Dermal Rabbit	> 2500 mg/kg
Iron oxide (Fe2O3) (1309-37-1)	
LD50 Oral Rat	> 10000 mg/kg

Carbon (7440-44-0)	
LD50 Oral Rat	**> 10000 mg/kg**
Silica, amorphous (7631-86-9)	
IARC Group	**3**
Quartz (14808-60-7)	
IARC Group	**1**
National Toxicology Program (NTP) Status	Known Human Carcinogens.
OSHA Hazard Communication Carcinogen List	In OSHA Hazard Communication Carcinogen list.
Iron oxide (Fe2O3) (1309-37-1)	
IARC Group	**3**

SECTION 12: ECOLOGICAL INFORMATION

Toxicity **No additional information available**

Silica, amorphous (7631-86-9)	
LC50 Fish 1	5000 mg/l (Exposure time: 96 h - Species: Brachydanio rerio [static])
EC50 Daphnia 1	7600 mg/l (Exposure time: 48 h - Species: Ceriodaphnia dubia)
Calcium oxide (1305-78-8)	
LC50 Fish 1	1070 mg/l (Exposure time: 96 h - Species: Cyprinus carpio [static])

Persistence and Degradability Not available

Bioaccumulative Potential

Silica, amorphous (7631-86-9)	
BCF Fish 1	(no bioaccumulation expected)
Calcium oxide (1305-78-8)	
BCF Fish 1	(no bioaccumulation)

Mobility in Soil Not available

Other Adverse Effects

Other Information: Avoid release to the environment.

SECTION 13: DISPOSAL CONSIDERATIONS

Waste Disposal Recommendations: Dispose of waste material in accordance with all local, regional, national, provincial, territorial and international regulations.

Ecology – Waste Materials: Avoid release to the environment.

SECTION 14: TRANSPORT INFORMATION

In Accordance with DOT Not regulated for transport

In Accordance with IMDG Not regulated for transport

In Accordance with IATA Not regulated for transport

In Accordance with TDG Not regulated for transport

SECTION 15: REGULATORY INFORMATION

US Federal Regulations

ProAsh®	
SARA Section 311/312 Hazard Classes	Immediate (acute) health hazard Delayed (chronic) health hazard
Ashes, residues (68131-74-8)	
Listed on the United States TSCA (Toxic Substances Control Act) inventory	
SARA Section 311/312 Hazard Classes	Immediate (acute) health hazard
Silica, amorphous (7631-86-9)	
Listed on the United States TSCA (Toxic Substances Control Act) inventory	
Quartz (14808-60-7)	
Listed on the United States TSCA (Toxic Substances Control Act) inventory	

SARA Section 311/312 Hazard Classes	Immediate (acute) health hazard Delayed (chronic) health hazard

Calcium oxide (1305-78-8)
Listed on the United States TSCA (Toxic Substances Control Act) inventory

SARA Section 311/312 Hazard Classes	Immediate (acute) health hazard

Iron oxide (Fe2O3) (1309-37-1)
Listed on the United States TSCA (Toxic Substances Control Act) inventory

Carbon (7440-44-0)
Listed on the United States TSCA (Toxic Substances Control Act) inventory

US State Regulations

Quartz (14808-60-7)	
U.S. - California - Proposition 65 - Carcinogens List	WARNING: This product contains chemicals known to the State of California to cause cancer.

Silica, amorphous (7631-86-9)
U.S. - Massachusetts - Right To Know List U.S. - New Jersey - Right to Know Hazardous Substance List U.S. - Pennsylvania - RTK (Right to Know) List

Quartz (14808-60-7)
U.S. - Massachusetts - Right To Know List U.S. - New Jersey - Right to Know Hazardous Substance List U.S. - Pennsylvania - RTK (Right to Know) List

Calcium oxide (1305-78-8)
U.S. - Massachusetts - Right To Know List U.S. - New Jersey - Right to Know Hazardous Substance List U.S. - Pennsylvania - RTK (Right to Know) List

Iron oxide (Fe2O3) (1309-37-1)
U.S. - Massachusetts - Right To Know List U.S. - New Jersey - Right to Know Hazardous Substance List U.S. - Pennsylvania - RTK (Right to Know) List

Canadian Regulations

ProAsh®	
WHMIS Classification	Class D Division 2 Subdivision A - Very toxic material causing other toxic effects Class D Division 2 Subdivision B - Toxic material causing other toxic effects

Ashes, residues (68131-74-8)	
Listed on the Canadian DSL (Domestic Substances List)	
WHMIS Classification	Class D Division 2 Subdivision B - Toxic material causing other toxic effects

Silica, amorphous (7631-86-9)	
Listed on the Canadian DSL (Domestic Substances List) Listed on the Canadian IDL (Ingredient Disclosure List)	
IDL Concentration 1 %	
WHMIS Classification	Uncontrolled product according to WHMIS classification criteria

Quartz (14808-60-7)
Listed on the Canadian DSL (Domestic Substances List) Listed on the Canadian IDL (Ingredient Disclosure List)

IDL Concentration 1 %	
WHMIS Classification	Class D Division 2 Subdivision A - Very toxic material causing other toxic effects Class D Division 2 Subdivision B - Toxic material causing other toxic effects
Calcium oxide (1305-78-8)	
Listed on the Canadian DSL (Domestic Substances List) Listed on the Canadian IDL (Ingredient Disclosure List)	
IDL Concentration 1 %	
WHMIS Classification	Class D Division 2 Subdivision B - Toxic material causing other toxic effects
Iron oxide (Fe2O3) (1309-37-1)	
Listed on the Canadian DSL (Domestic Substances List) Listed on the Canadian IDL (Ingredient Disclosure List)	
IDL Concentration 1 %	
WHMIS Classification	Uncontrolled product according to WHMIS classification criteria
Carbon (7440-44-0)	
Listed on the Canadian DSL (Domestic Substances List)	
WHMIS Classification	Uncontrolled product according to WHMIS classification criteria

This product has been classified in accordance with the hazard criteria of the Controlled Products Regulations (CPR) and the SDS contains all of the information required by CPR.

SECTION 16: OTHER INFORMATION, INCLUDING DATE OF PREPARATION OR LAST REVISION

Revision Date : 05/27/2015

Other Information : This document has been prepared in accordance with the SDS requirements of the OSHA Hazard Communication Standard 29 CFR 1910.1200.

GHS Full Text Phrases:

STOT RE 2	Specific target organ toxicity (repeated exposure) Category 2
STOT SE 3	Specific target organ toxicity (single exposure) Category 3
H320	Causes eye irritation
H335	May cause respiratory irritation
H372	Causes damage to organs through prolonged or repeated exposure

"The information provided herein is believed by seller to be accurate at the time of preparation, or prepared from sources believed to be reliable. Health and safety precautions in this data sheet may not be adequate for all individuals or situations. Users have the responsibility to comply with all laws and procedures applicable to the safe handling and use of the product, to determine the suitability of the product for its intended use, and to understand possible hazards associated with mixing this product with other materials. SELLER MAKES NO WARRANTY, EXPRESS OR IMPLIED, CONCERNING THE PRODUCT, THE MERCHANTABILITY, OR FITNESS THEREOF FOR ANY PURPOSE, OR CONCERNING THE ACCURACY OF ANY INFORMATION PROVIDED BY SELLER".

NA GHS SDS

Material Safety Data Sheet

For

Unhardened Concrete

GOLDEN TRIANGLE CONSTRUCTION

Section I - Identity

Manufacturer's name and address:	GOLDEN TRIANGLE CONSTRUCTION CO INC. 8555 OLD STEUBENVILLE PIKE IMPERIAL, PA 15126
Supplier's name and address:	724-828-2800
Emergency Telephone Number:	724-828-2828
Chemical Name & Synonyms:	Plastic concrete, concrete slurry, unset concrete
Date Revised:	

Section II - Hazardous Ingredients

Unhardened concrete is a slurry of portland cement, aggregate, silica sand, and various admixtures used to enhance concrete performance characteristics.

	CAS #	%	1994-95 TLV	OSHA PEL
Portland Cement	65997-15-1	>1%	10 mg/m³	15 mg/m³ Total Dust 5 mg/m³ Respirable Dust
Silica (quartz)	14808-60-7	>0.1%	0.05 mg/m³*	10 mg/m³ / % silica*+2
Calcium Oxide	1305-78-8	>1%	2 mg/m³	5 mg/m³

* Respirable fraction
NOTE: Unhardened concrete is a wet slurry and dusting is not a concern.

Section III - Physical/Chemical Characteristics

Boiling Point:	Not applicable
Specific Gravity (H_2O=1):	2.20 - 2.60
Vapor Pressure (mmHg):	Not applicable
Melting Point:	Not applicable
Vapor Density (Air=1):	Not applicable
Evaporation Rate:	Not applicable
Solubility in Water:	Slight: 0.1-1.0%
Appearance and Odor:	Thick gray slurry; alkaline, earthy odor

Section IV - Fire and Explosion Hazard of Material

Flash Point (Method Used): Not Applicable

Flammable Limits: Not Applicable

LEL/UEL: Not Applicable

Extinguishing Media: Not Applicable

Special Firefighting Procedures: Not Applicable

Unusual Fire and Explosion Hazards: Not Applicable

Section V - Health Hazard Data

Route of Exposure:

Inhalation?	No
Skin?	Yes
Eyes?	Yes
Ingestion?	Yes

Health Hazards (acute and chronic):

Acute: Contact with unhardened concrete and the Ableed® water can produce severe skin burns: development of pain symptoms may be delayed several hours. Irritation of both eyes and tissue lining of nose can be severe. Prolonged contact can cause severe alkali burns. Hypersensitive individuals may develop an allergic-type of dermatitis (cement in concrete may contain traces of chromium). Pre-existing skin conditions may be worsened.

Chronic: Dermatitis can result from continued contact of unprotected skin with unhardened concrete. Exposure to respirable crystalline silica without the use of a respirator can cause silicosis. Shortness of breath, coughing, diminished work capacity, reduced lung volume and heart enlargement characterizes silicosis. Silicosis may aggravate other chronic conditions and may increase the risk of pulmonary tuberculosis infection.

	Calcium Oxide	Unhardened Concrete	Portland Cement	Silica (Quartz)
Carcinogenicity:				
NTP:	No	No	Yes	No
IARC:	No	No	Yes	No
OSHA regulated:	No	No	No	No

Respiratory exposure to silica in unhardened concrete is not a concern.

Emergency and First Aid Procedures: Irrigate eyes immediately and repeatedly with water and get prompt medical attention. Wash exposed skin areas with soap and water.

Section VI - Reactivity Data

Stability: Unhardened concrete will consolidate and harden to a continuous mass, compressive strength increasing with time.

Incompatibility (Materials to Avoid): Not Applicable

Hazardous Decomposition or By-Products: Not Applicable

Hazardous Polymerization: Will not occur:
Conditions to Avoid: Not Applicable

Section VII - Precautions for Safe Handling and Use

Steps to be taken in case material is released or spilled: Emergency procedures are not required.

Waste disposal method: Material can be disposed of as common waste or returned to a container for later use if it is not contaminated.

Precautions to be taken in handling or storing: **AVOID CONTACT WITH SKIN AND EYES.** Skin of hands, feet, and lower legs, including the knees, is especially vulnerable (e.g., concrete finishers).

Other precautions: Use personal protective equipment (PPE) as described in Section VIII, Control Measures.

Section VIII - Control Measures

Respiratory protection: Respiratory protection should not be necessary when handling unhardened concrete. However, a NIOSH-approved dust respirator is recommended when handling dry cement or when cutting or otherwise abrading hardened concrete.

Ventilation: Local exhaust ventilation should not be necessary when handling unhardened concrete. However, local exhaust ventilation can be used to control airborne dust levels that may be generated while handling dry cement or when cutting or otherwise abrading hardened concrete.

Protective gloves: Select chemical and abrasion resistant gloves to provide protection against skin contact with unhardened concrete and the Ableed® water. Avoid contaminating the inside of protective gloves with concrete or bleed water.

Eye Protection: Use tight fitting goggles.

Other Protective Clothing or Equipment:

Use impermeable boots, gloves, aprons and clothing that will protect all potentially exposed skin, and prevent contact with unhardened concrete and the bleed water. Immediately remove and/or rinse with fresh water clothing that has become wetted or saturated by unhardened concrete or bleed water. Contaminated clothing that remains in contact with the skin can cause skin burns.

Work/Hygienic Practices:

Wash hands frequently during the workday with fresh water and pH-neutral soap. Immediately after working with unhardened concrete, workers should shower with pH-neutral soap and fresh water. Avoid placing hands in the rinse water used to clean tools, concrete residue in the rinse water causes the water to become highly alkaline. Precautions must be observed because the alkaline cement in concrete can cause severe burns without warning: little heat is sensed.

This product neither contains nor is directly manufactured with any controlled ozone depleting substances, Class I and II.

Attachment O

Emission Summary Sheet

CBP EMISSION SUMMARY SHEET

Source	PM		PM_{10}	
	PTE (lb/hr)	PTE (ton/yr)	PTE (lb/hr)	PTE (ton/yr)
Total Aggregate Transfer Emissions[1]	0.2561	0.1225	0.1540	0.0737
Total Sand Transfer Emissions[1]	0.3912	0.1871	0.2355	0.1126
Cement Unloading to Elevated Storage Silo (Pneumatic)[2]	0.0209	0.0133	0.0127	0.0081
Pneumatic Cement Additive Unloading to Silo[2]	0.0032	0.0020	0.0019	0.0012
Weigh Hopper Loading[3]	0.1656	0.1058	0.0999	0.0638
Mixer Loading (Central)[3]	0.1656	0.1058	0.0999	0.0638
Truck Mix Loading[3]	0.0000	0.0000	0.0000	0.0000
Paved Haulroads[4]	0.0000	0.0000	0.0000	0.0000
Unpaved Haulroads[4]	1.25	0.75	0.37	0.22
Wind Erosion from Storage Piles[5]	0.83	3.63	0.39	1.70
Total	3.08	4.92	1.29	2.25

1. Enter the potential to emit of PM and PM10 associated with the transfer of sand and aggregrate from stockpiles to elevated bins. Use appropriate emission factors and/or equations from the CBP Emission Factor Sheet. Emission calculations may also be determined using spreadsheet G50ECALC.

2. Enter the potential to emit of PM and PM10 associated with the pneumatic transfer of cement and cement additive to storage structures or silos. Use appropriate emission factors and/or equations from the CBP Emission Factor Sheet. Emission calculations may also be determined using spreadsheet G50ECALC.

3. Enter the potential to emit of PM and PM10 associated with loading of weigh hopper(s), central mixer and trucks. Use appropriate emission factors and/or equations from the CBP Emission Factor Sheet. Emission calculations may also be determined using spreadsheet G50ECALC.

4. Enter the potential to emit of PM and PM10 associated with vehicle activity on paved or unpaved haulroad(s). Use appropriate emission factors and/or equations from the CBP Emission Factor Sheet. Emission calculations may also be determined using spreadsheet G50ECALC.

5. Enter the potential to emit of PM and PM10 associated with wind erosion from sand and aggregate stockpiles. Use appropriate emission factors and/or equations from the CBP Emission Factor Sheet. Emission calculations may also be determined using spreadsheet G50ECALC.

6. Attach all potential emission calculations/spreadsheet output to this CBP Emission Summary Sheet.

Attachment P

Other Supporting Documents: Equipment Manufacturer's Literature

a. Vince Hagan Co., Concrete Batch Plant, Model #HT/CM-12400-65
b. Vince Hagan Co., Intruss Baghouse, Model #1083-JP
c. Cincinnatti Fan, Concrete Batch Plant Baghouse Fan, Model #SQB1-200
d. Caterpillar, Gen Set, Model #XQ 500 Rental
e. Agreement to Enter Upon and Use Land & Release of Liability

The National Ready Mixed Concrete Association endorses CPMB and PMMD member companies as preferred providers of concrete batching equipment.

Serving the U.S. and international customers.

Sales Offices Located in Dallas, Chicago and Atlanta

www.vincehagan.com
sales@vincehagan.com

800.354.3238
214.330.4601
FAX 214.331.9177

PO Box 655141 Dallas, TX 75265-5141
1601 North Walton Walker Dallas, TX 75211

VINCE HAGAN

HT-series haganator travel-all

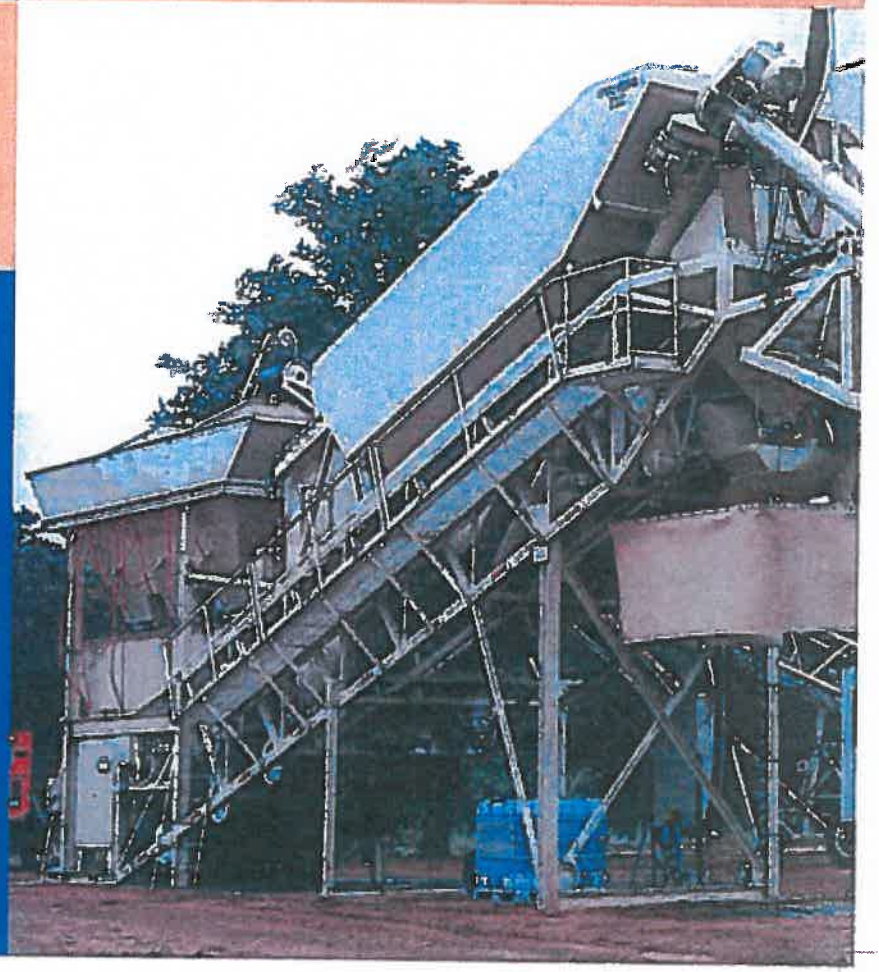

In 1956, Vince Hagan, founder of The Vince Hagan Company, began with an original idea. He designed and built the first truly mobile concrete batch plant. Over the years, this patented "Haganator" design has become an international icon for the mobile concrete industry. Today, The Vince Hagan Company is continuing to improve this original idea. By bringing together proven experience and the most current technology, we offer our customers the highest quality products and services available in the industry.

The HT-Series Haganator Travel-All is the most time-efficient and cost-effective fully mobile concrete batch plant available today. The HT is completely mobile and travels as a single load of freight including dust collection, saving you transportation cost. At your job site, the plant can be fully erected and operational in less than four hours. All components are on board and the entire plant is pre-wired to NEC, plumbed for air and water, and tested at our factory to ensure trouble free start-up and operation.

The Vince Hagan Company offers the highest quality products and services available. Our sales and engineering staff will guide you through the planning stages to ensure your company is purchasing the right equipment for the job. Sales offices are located in Dallas, Chicago, and Atlanta. We have company service personnel who travel directly to your job site and our replacement parts are available on a 24 hour basis. Our goal is to provide the best service before and after the sale. A successful project begins with The Vince Hagan Company.

haganator fully mobile concrete batching plant

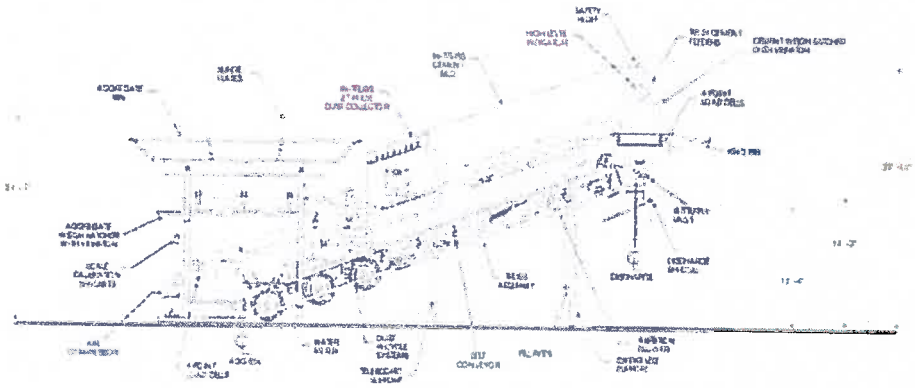

All drawings and contained herein is general in nature and are not intended for specific application purposes. The Vince Hagan Company reserves the right to make changes in specifications, design features or add improvements at any time without notice or obligation, unless otherwise stated and optional items.

Depending on your needs, the HT-Series mobile batch plant has many options available to meet your production requirements:

- Exclusive plant mounted jet-pulse dust collection system.
- Auto dust recycle system.
- Up to 500 BBL of additional cement/ fly ash storage.
- Up to 100 Tons of aggregate storage.
- Complete hydraulic self-erect system. No cranes required.
- Multi-flight cement screw feeders up to 12".
- Deep trough transfer belt 24" to 48" wide. (Belt speed 380 ft./min. up to 650 ft./min.)
- 12 yard aggregate batcher
- 12 yard cement batcher.

Need additional storage? The Vince Hagan HCA completely mobile auxiliary cement or fly ash storage silo is also available. Featuring an in-truss frame design for easy travel and set up. This low profile silo is the largest in the industry with up to 500 BBL of storage capacity

STANDARD HAGANATOR MODELS	HT-10250A-45	HT-10300B-65	HT-12400C-65	SUPER HT-12500D-80
CAPACITY	140 YPH (transit mix)	200 YPH (transit mix)	[illegible]	Up to 400 YPH (central mix)
AXLES (dist tires, 10 dia wheels & air brakes)	Tandem	Tandem	Tandem	Triple
TRUSS WIDTH	10'-0" WIDE TRUSS	10'-0" WIDE TRUSS	10'-0" WIDE TRUSS	12'-0" WIDE TRUSS
DISCHARGE HEIGHT (bel dumping)	14'-6"	14'-6"	14'-2"	14'-10"
CLEAR GROUND 3 CU.YD. MIXING (bottom of mixer to ground)	45 TON 33.3 CY	65 TON 48.1 CY	65 TON 48.1 CY	80 TON 59.2 CY
ADDITIONAL DISCHARGE 4 FOOT LOOSE 2.5 CU.YD.	YES	YES	YES	YES
ADDITIONAL HOPPERS	10 YRDS - 38,000#	10 YRDS - 38,000#	12 YRDS - 40,000#	12 YRDS - 40,000#
TRANSFER CONVEYOR	YES	YES	YES	YES
DEPTH FOLDING BELTS	200 LBS/CU.YD.	200 LBS/CU.YD.	200 LBS/CU.YD.	200 LBS/CU.YD.
CEMENT SILO (minimum capacity)	24/15 HP	37/20 HP	37/20 HP	48/60 HP
CEMENT FEEDERS MULTI-FLIGHT (reversible and independently controlled)	300 TPH 380 FPM	400 TPH 380 FPM	600 TPH 380 FPM	2100 TPH 680 FPM
CEMENT DISCHARGE 4 FOOT LOOSE 2.5 CU.YD.	35 DEGREES	35 DEGREES	35 DEGREES	35 DEGREES
CEMENT DISCHARGE WATER MIXER (piping to discharge)	240 LBS/1000 CU.FT	320 LBS/1000 CU.FT	400 LBS/1000 CU.FT	500 LBS/2000 CU.FT
AIR COMPRESSOR	TWIN 7/10 HP 42 CFM	TWIN 10/15 HP 100 CFM	TWIN 12/25 HP 240 CFM	TWIN 12/25 HP 240 CFM
BATCHING CONTROLS (automation available)	YES	YES	YES	YES
ELECTRICAL SERVICE (power in conduit)	15 YRDS - 7,200#	10 YRDS - 7,200#	12 YRDS - 10,000#	12 YRDS - 10,000#
MOORING/LOCKING	YES	YES	YES	YES
CHARGING CONVEYOR (center feed charge to center feed agg bin)	10" BUTTERFLY	10" BUTTERFLY	10" BUTTERFLY	10" BUTTERFLY
TRANSLOADING BENCH (large pin to rear)	3" TURBO	3" TURBO	3" TURBO	3" TURBO
WIDTH	10 HP 35 CFM	10 HP 35 CFM	15 HP 50 CFM	15 HP 50 CFM
HEIGHT	ELECTRICS/ENGINE	ELECTRICS/ENGINE	ELECTRICS/ENGINE	ELECTRICS/ENGINE
WEIGHT	230/460V 3PH 60HZ	230/460V 3PH 60HZ	230/460V 3PH 60HZ	230/460V 3PH 60HZ
	TRC	TRC	TRC	TRC
	40'-6"	40'-6"	40'-6"	46'-6"
	61'-0"	61'-0"	61'-0"	65'-6"
	12'-0"	12'-0"	12'-0"	12'-0"
	14'-6"	14'-6"	14'-0"	14'-1"
	62,000#	58,000#	64,000#	87,000#

What is so unique about the HT-Series Haganator Travel-All?

- Fewest loads of freight in the industry (Due to plant mounted dust system)
- Largest cement storage in the industry
- Largest aggregate storage in the industry
- Quick and easy set-up-under 4 hours
- No concrete foundations required (depending on soil conditions) Sets up on steel plates or timber mats.
- Completely erected and tested at our factory
- Easily adapted to a central mix operation

HT - SERIES | Haganator Travel-All

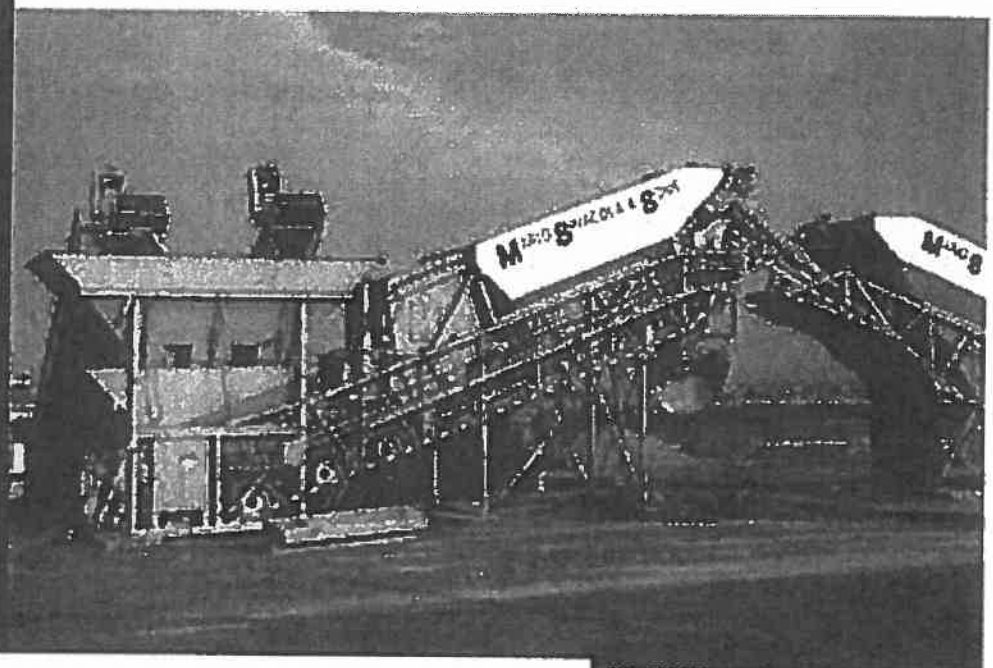

HT-SERIES BATCH PLANT AND HCA AUX

STANDARD HAGANATOR MODELS	HT-10250A-45	HT-10300B-65	HT-12400C-65	SUPER HT-12500D-
CAPACITY	140 YPH (transit mix)	200 YPH (transit mix)	220 YPH (transit mix)	Up to 400 YPH (central mix)
AXLES (dual tires, 10-hole wheels & air brakes)	Tandem	Tandem	Tandem	Triple
TRUSS WIDTH	10'-0" WIDE TRUSS	10'-0" WIDE TRUSS	10'-0" WIDE TRUSS	12'-0" WIDE TRUSS
DISCHARGE HEIGHT (steel clearance)	14'-6"	14'-4"	14'-2"	14'-10"
OVERHEAD BIN, 3 COMPARTMENTS	45 TON/33.3 CY	65 TON/48.1 CY	65 TON/48.1 CY	80 TON/59.2 CY
(both sides fold down for travel)	YES	YES	YES	YES
AGGREGATE BATCHER SIZE	10 YARDS - 36,000#	10 YARDS - 36,000#	12 YARDS - 40,000#	12 YARDS - 40,000#
4 POINT LOAD CELL 20K EACH	YES	YES	YES	YES
AGGREGATE BATCHER GATES	2 DOUBLE CLAM	2 DOUBLE CLAM	2 DOUBLE CLAM	2 DOUBLE CLAM
TRANSFER BELT CONVEYOR	24"/15 HP	30"/20 HP	36"/30 HP	48"/ 60 HP
	380 TPH/380FPM	600 TPH/380FPM	806 TPH/380FPM	2164 TPH/650FPM
DEEP TROUGHING IDLERS	35 DEGREES	35 DEGREES	35 DEGREES	35 DEGREES
CEMENT SILO (in-truss design)	250 BBL/1000 CU FT	300 BBL/1200 CU FT	400 BBL/1600 CU FT	500 BBL/2000 CU FT
CEMENT FEEDERS, MULTI-FLIGHT	TWIN 7"/10HP/42 CFM	TWIN 10"/15HP/100 CFM	TWIN 12"/25HP/240 CFM	TWIN 12"/25HP/240 CFM
(reversible and independently controlled)	YES	YES	YES	YES
CEMENT BATCHER SIZE	10 YARDS - 7,200#	10 YARDS - 7,200#	12 YARDS - 10,000#	12 YARDS - 10,000#
4 POINT LOAD CELL 2.5K EACH	YES	YES	YES	YES
CEMENT BATCHER DISCHARGE	10" BUTTERFLY	10" BUTTERFLY	10" BUTTERFLY	10" BUTTERFLY
WATER METER (piping to discharge)	2" TURBO	3" TURBO	3" TURBO	3" TURBO
AIR COMPRESSOR	10 HP/35 CFM	10 HP/35 CFM	15 HP/50 CFM	15 HP/50 CFM
BATCHING CONTROLS (automation available)	ELECTRIC SOLENOID	ELECTRIC SOLENOID	ELECTRIC SOLENOID	ELECTRIC SOLENOID
ELECTRICAL SERVICE (pre-wired in conduit)	230/460V/3PH/60HZ	230/460V/3PH/60HZ	230/460V/3PH/60HZ	230/460V/3PH/60HZ
MOTORS ENCLOSURE RATING	TEFC	TEFC	TEFC	TEFC
OPERATING POSITION LENGTH	40'-8"	40'-8"	40'-8"	46'-8"
(centerline discharge to centerline agg bin)				
TRAVEL DIMENSIONS: LENGTH (king pin to rear)	61' - 0"	61' - 0"	61' - 0"	65' - 6"
WIDTH	12' - 0"	12' - 0"	12' - 0"	12' - 0"
HEIGHT	14' - 6"	14' - 6"	14' - 9"	14' - 3"
WEIGHT	52,000#	56,000#	64,000#	87,000#

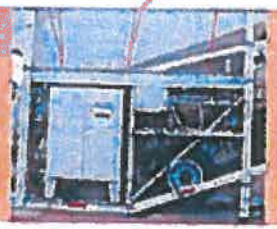

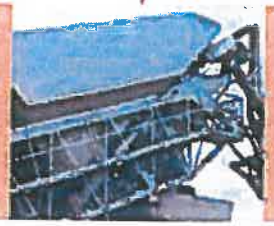

Electrical Controls

Manual electric push-button control panel or automation ready NEMA enclosure. Electric air control valves with emergency manual override. Complete wiring in EMT conduit to NEC Standards. Main disconnect with motor starters mounted in NEMA panel. Special electrical requirements also available.

Work Platforms & Walkways

Safety without compromising portability. Include this option for easy accessibility and maintenance. Folds up and travels with the plant.

In-Truss Cement Silo

250 to 500 BBL cement storage, largest in the industry (4 cu. ft. per BBL). In-truss frame design includes fill pipe, manual pressure relief valve, piped aeration system, manhole, and dual discharge with emergency slide gates. Optional split silo available.

Screw Feeders

Twin 7", 10" or 12" screw feeders. Fastest available with 1/2 pitch initial flight to prevent packing, TEFC electric motor, inspection plates, clean out doors, and emergency reversing starters.

Dust Shroud

Various shroud options available to match transit mixer, (three sided fixed, "baby buggy", or telescopic). All designed for high efficiency dust collection.

VINCE HAGAN

CONCRETE BATCHING EQUIPMENT

MODEL 1083-JP INTRUSS BAGHOUSE SPECIFICATIONS

CLOTH FILTERING AREA	1083 FT^2
NUMBER OF BAGS	99
BAG DIAMETER	6"
BAG LENGTH	84"
CLOTH TYPE	POLYESTER FELT
CLOTH WEAVE	POLYESTER .065" (NOM.)
CONSTRUCTION	NEEDLE PUNCHED, SCRIM SUPPORTED
PERMEABILITY	25 TO 35 CFM/SQ. FT. CLOTH AREA AT .5" GAUGE RESISTANCE
AIR VOLUME INTAKE (20" BLOWER)	6500 CFM
EXHAUST OPENING SIZE	19 7/16" x 17 3/8"
EFFICIENCY	99.9% AT 2.5 MICRON
MANUFACTURER	THE VINCE HAGAN COMPANY
BAG WEIGHT	16+ 1 OZ./SQ. YD.
MULLEN BURST	400 PSI MIN.
FINISH	PLAIN, SINGED, ACRYLIC COATED, TEFLON COATED & MEMBRANE
TEMPERATURE	275°F CONTINUOUS TO 300°F SURGE
MOTOR	15 HP @ 3450 RPM 254T
FAN SPEED	2150 RPM (NOM.)

MEMBER OF: NATIONAL READY MIXED CONCRETE ASSOCIATION

P.O. BOX 835141 • DALLAS, TX 75265-5141 • 3500 OAK LAWN AVE SUITE 720 DALLAS TX 75219• (214) 220-4601 • (800) 364-3228 • FAX (214) 331-9177

TABLE 11
FABRIC FILTERS

Point Number(from Flow Diagram)	Manufacturer & Model No. (if available) The Vince Hagan Co. MODEL 1083-JP
Name of Abatement Device Model 1083-JP	Type of Particulate Controlled Portland Cement

GAS STREAM CHARACTERISTICS

Flow Rate (acfm)		Gas Stream Temperature (°F)	Particulate Grain Loading (grain/scf)	
Design Maximum 6500	Average Expected 6500	70 F 275 F Continuous to 300 F Surge	Inlet <0.005	Outlet
Pressure Drop (in. H_2O) 6"		Water Vapor Content of Effluent Stream (lb water/lb dry air)	Fan Requirements 15(hp) 6500(ft^3/min)	

PARTICULATE DISTRIBUTION (By Weight)

Micron Range	Inlet	Outlet
0.0-0.5	0 %	%
0.5-1.0	1 %	%
1.0-5.0	25 %	%
5-10	18 %	%
10-20	25 %	%
over 20	25 %	%

FILTER CHARACTERISTICS

Filtering Velocity (acfm/ft^2 of Cloth)	Bag Diameter (in.)	Bag Length (ft)	Number of Bags	Number of Compartments in Baghouse
6500/1083 = 6	6"	7	99	1

Bag rows will be: Straight (9) rows of 11 bags.	Walkways will be provided between banks of bags: Yes platform is provided to top of Dust Collector. 2 hatches provided.

Filtering Material: Polyester Fume (Polyester .080") cloth weave; needle punched & scrim supported;
Anticipate replacement: 2 years.

Describe Bag Cleaning Method and Cycle: Jet pulse- high entry inlet slows material to fall from air stream into collecting hopper. 9 rows of (11) bags are pulsed by a high-pressure air controlled by adjustable timer system. Pulse cycle is typically.2-.3 sec on per row, with 25-30 sec between rows. Automatic Reclaim(option), Blower with vane feeder sends material back into silo for reuse through a 3" line.

Blower:
Location: mounted to side of collector .
Manufacturers description: (See drawings for dimensions) Cincinnati Fan SQBI210 Performance curves attached.
Blower operated at 2150 rpm nominal. Motor : 15 hp @ 3450 rpm 460V3PH-60HZ FLA 21 amps.

System Dynamics: Time required to build suitable "filter cake" : 4 hours
Estimate of emissions from system prior to effective built -up of filter cake: <.25 lb.

MODEL VH-1083JP INTRUSS
DUST COLLECTOR

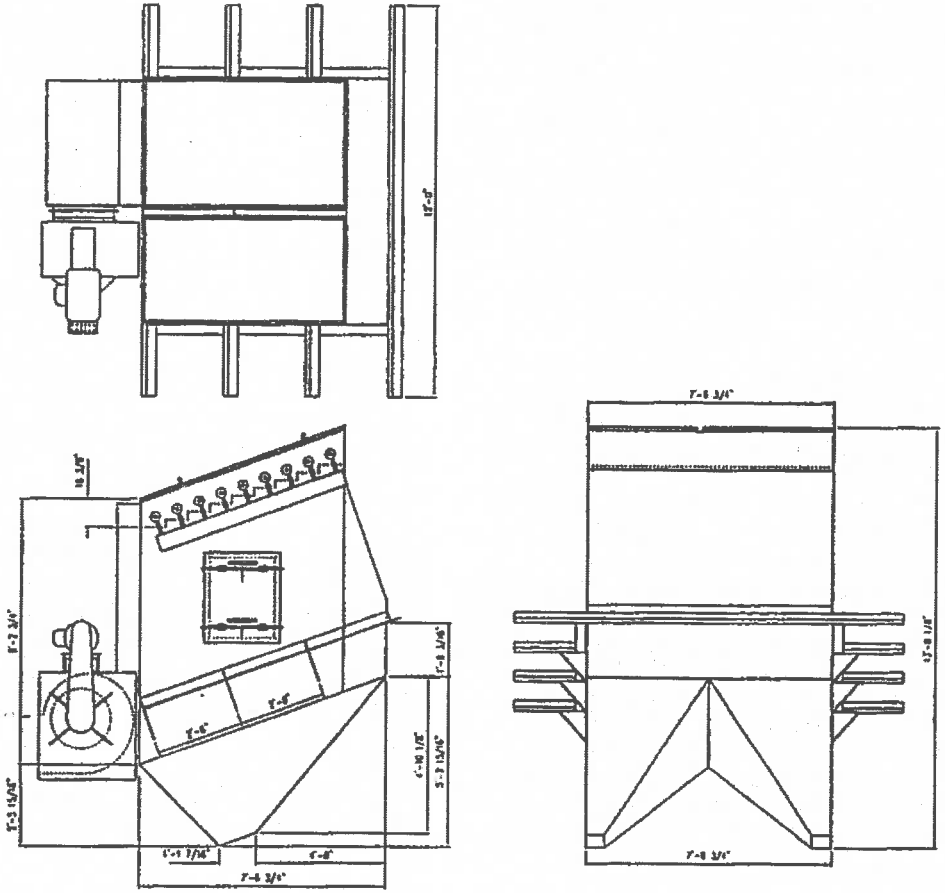

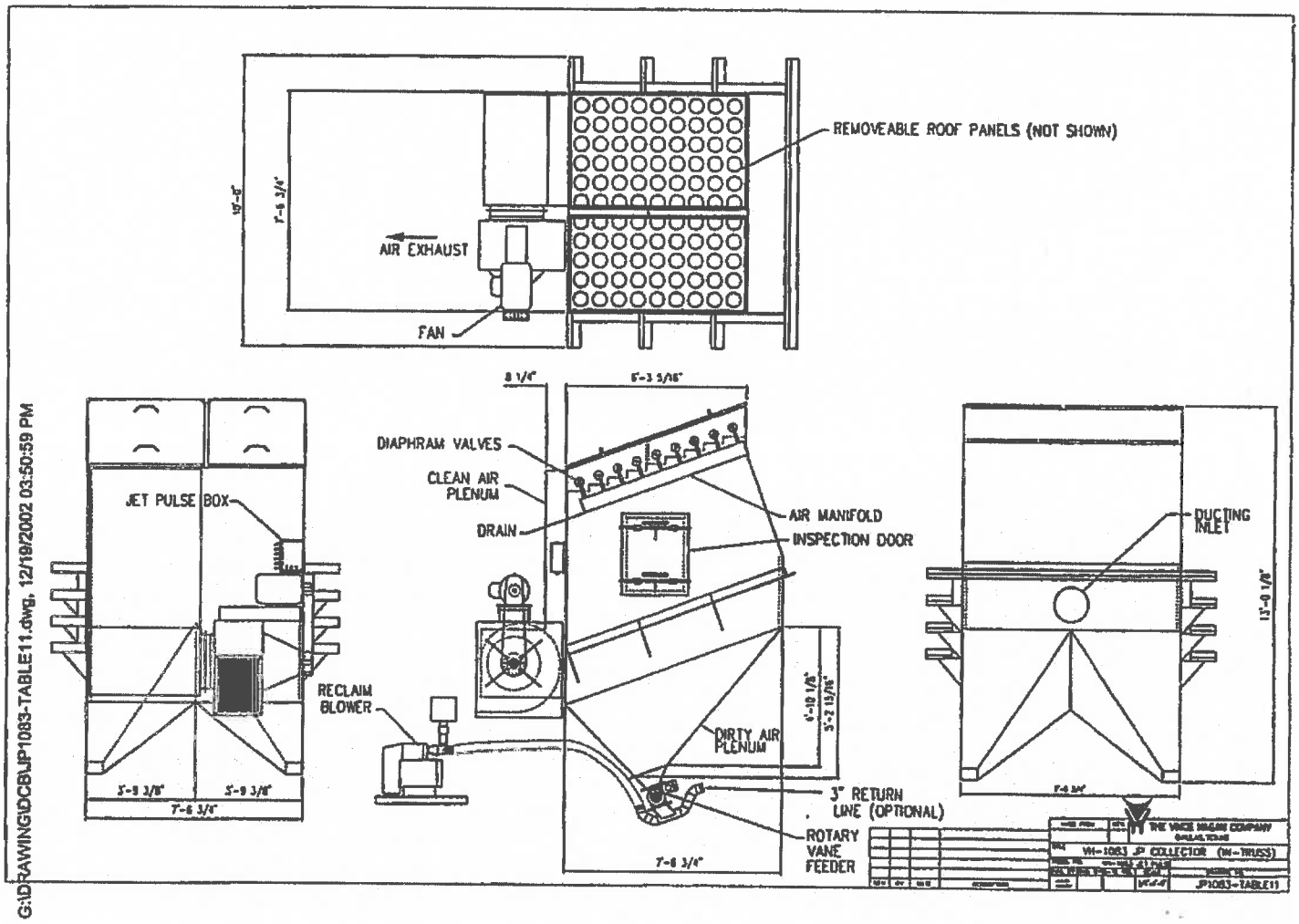

G:\DRAWING\DCBLIP1083-TABLE11.dwg, 12/19/2002 03:50:59 PM

cincinnati fan — OEM and Industrial Air Handling Specialist

FAN SELECTION And PERFORMANCE

Your Cincinnati Fan Representative:

Phone
Fax

Thursday, December 19, 2002

Job Name:
Reference:

Operating Requirements

Volume, ACFM	6,500
Static Pressure, in. W.G.	6.0
Density, lb./ft.³	0.0685
Operating Temperature, °F	100
Site Altitude, ft. ASL	500
Relative Humidity, %	0
Specific Gravity	1.000
Inlet Pressure, in. W.G.	-0.0
AMCA Arrangement No.	None
Motor Frequency, Hz	60
Start-Up Temperature, °F	70

Fan Selection and Specifications

Model	SQBI-200
Fan RPM	2,150
Wheel Description	Steel SQBI-200
Wheel Width, %	100%
Wheel Diameter, in.	21.56
Inlet Diameter, in.	22.56
Outlet Velocity, ft./min.	2,849
Fan BHP	10.2
Static Efficiency, %	73.1%
Cold Start BHP	10.8
Construction Class	Class II

Performance Graph

Cincinnati Fan Model SQBI-200 with Steel SQBI-200 Wheel (Full Width) @ 2,150 RPM
Rating Point: 6,500 ACFM @ 6.0 in. WG SP, 0.0685 lb./ft.³ Density, 10.2 BHP

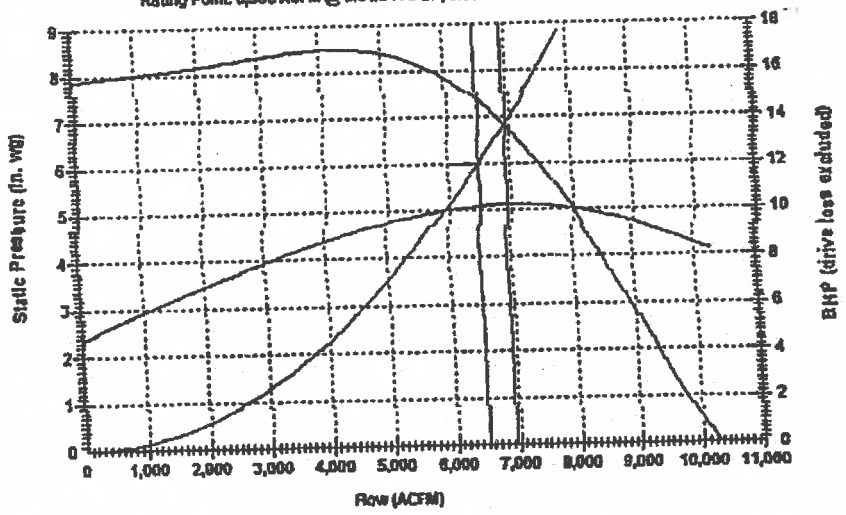

CFSWin Version: 4.1.2 Database Version: 4.5

B0012648

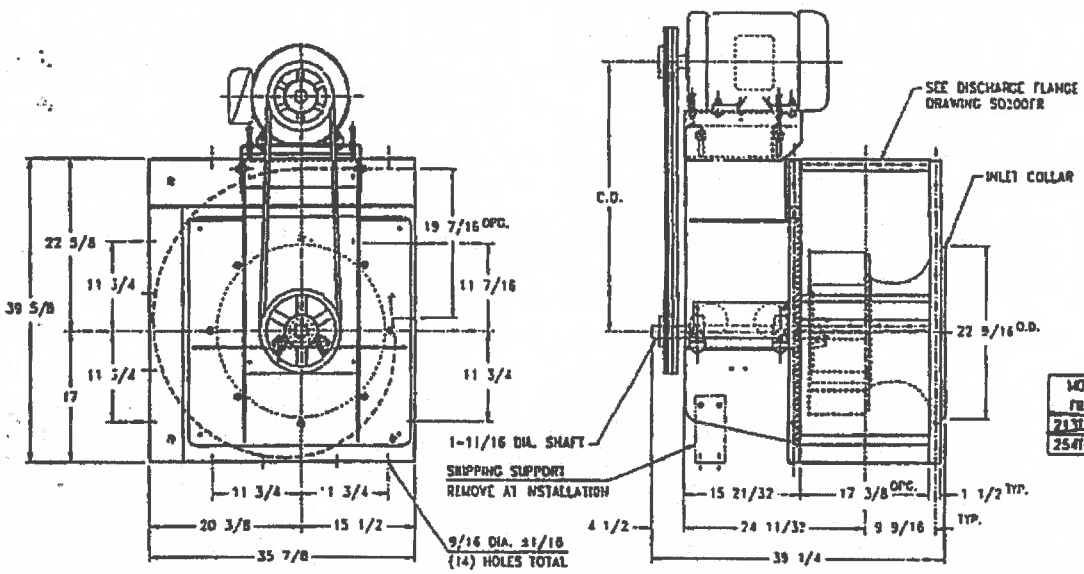

MOTOR FRAME	CENTER DISTANCE MIN.	CENTER DISTANCE MAX.
213T-215T	34	36-7/16
254T-256T	35	37-7/16

NOTES:
1. FANS ARE PAINTED GRAY.
2. CLASS II CONSTRUCTION.
3. MOTOR FRAME RANGE: 213T 256T.
4. BELT GUARD BY OTHERS.

CLASS II, CLOCKWISE TOP HORIZONTAL DISCHARGE WITH 256T MOTOR SHOWN ABOVE.

NO.	DESCRIPTION	DATE	INITIALS
	REVISIONS		

SUPERSEDES: SOBI20VH-800

SUPERSEDED BY:

CERTIFIED BY:

TOLERANCES: UNLESS OTHERWISE SPECIFIED ± 1/8 FRACTIONS ± 1/8 DECIMALS X.XX = ±0.005 X.XXX = ±0.005 X.X = ±0.170 ALL DIMENSIONS IN INCHES UNLESS OTHERWISE SPECIFIED

MATERIAL:

SCALE: FULL SH. CAD

DATE: 1/21/00

DR. BY: SPC

CH. BY:

cincinnati fan
7697 SNIDER ROAD MASON, OHIO 45040

TITLE: SPECIAL SOBI-200 ARR. 9 FOR VINCE HAGAN

ASSEMBLY

DRAWING NO. B0012648

SHEET 1 of 1

REV.

SQ200FR-698

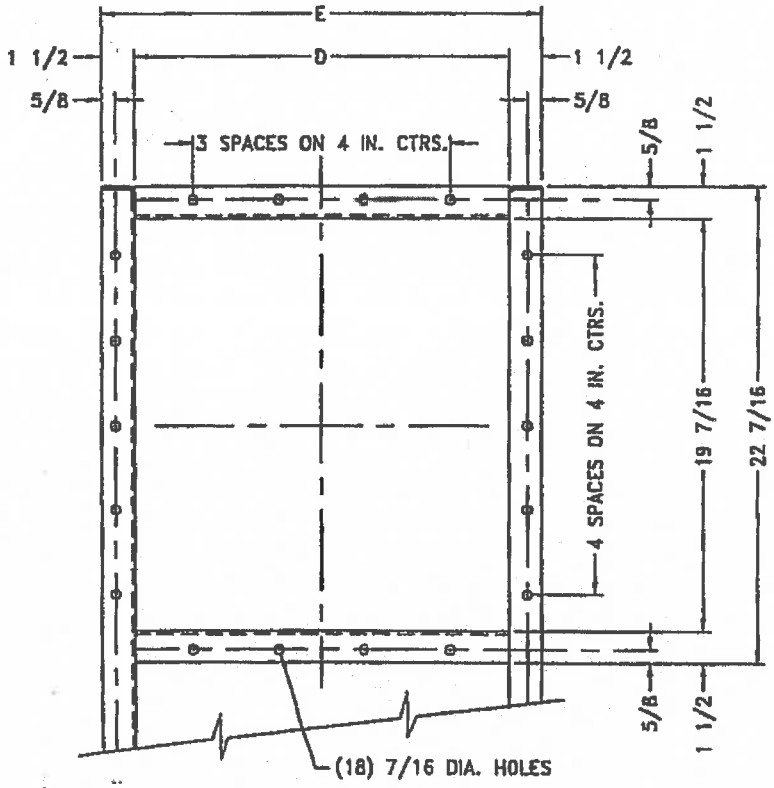

DIMENSIONS IN INCHES ±1/8

	% WIDTH	D	E
X	*100%*	*17-3/8*	*20-3/8*
	95%	17	20
	90%	16-5/8	19-5/8
	85%	16-1/4	19-1/4
	80%	15-7/8	18-7/8
	75%	15-1/2	18-1/2
	70%	15-1/8	18-1/8
	65%	14-3/4	17-3/4
	60%	14-3/8	17-3/8
	55%	14	17
	50%	13-5/8	16-5/8
	45%	13-1/4	16-1/4

cincinnati fan
7697 SNIDER ROAD MASON, OHIO 45040

TITLE SQ81-200 REDUCED FLOW DISCHARGE FLANGE DIMENSIONS

CERTIFIED BY:

DRAWING NO. SQ200FR-698

XQ500 RENTAL

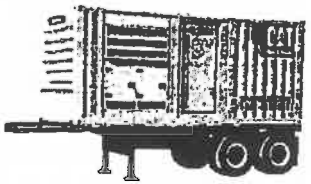

Image shown may not reflect actual package

STANDBY 500 kW
PRIME 455 kW
POWER MODULE
60 Hz 1800 rpm 480V

Frequency	Voltage	Standby kW (kVA)	Prime kW (kVA)
60 Hz	480/277V	500 (625)	455 (568)
60 Hz	240/139V	500 (625)	455 (568)
60 Hz	208/120V	500 (625)	455 (568)
60 Hz	600V	500 (625)	455 (568)

FEATURES

FUEL/EMISSIONS STRATEGY
- EPA Tier 4 Interim

DESIGN CRITERIA
- Accepts 100% rated load in one step per NFPA 110 and meets ISO 8528-5 transient response
- CSA Approved

SINGLE-SOURCE SUPPLIER
- Factory designed and fully prototype tested with certified torsional vibration analysis available
- ISO 9001:2000 compliant facility

WORLDWIDE PRODUCT SUPPORT
- Cat® dealers provide extensive post sale support including maintenance and repair agreements
- Cat dealers have over 1600 dealer branch stores operating in 200 countries
- The Cat S•O•S℠ program effectively detects internal engine component condition, even the presence of unwanted fluids and combustion byproducts

CAT C15 ATAAC DIESEL ENGINE
- Utilizes ACERT™ Technology
- Reliable, rugged, durable design
- Four-stroke diesel engine combines consistent performance and excellent fuel economy with minimum weight
- Electronic engine control

CAT GENERATOR
- Matched to the performance and output characteristics of Cat engines
- Single point access to accessory connections
- UL 1446 Recognized Class H insulation

CAT EMCP 4.4 CONTROL PANEL
- Fully featured power metering, protective relaying engine/generator control and monitoring
- Simple user friendly interface and navigation
- Automatic set-point adjustment integrated with voltage and frequency selection

CAT DIGITAL VOLTAGE REGULATOR (CAT DVR)
- Three-phase sensing
- Adjustable volts-per-hertz regulation
- Provides precise control, excellent block loading, and constant voltage in the normal operating range

SOUND ATTENUATED CONTAINER
- Provides ease of transportation and protection
- Meets 72 dB(A) at 7 meters or below per SAE J1074 measurement procedure at 110% prime load

ENVIRONMENTALLY FRIENDLY
- 110% spill containment of onboard engine fluids

XQ500 RENTAL

CAT

FACTORY INSTALLED STANDARD EQUIPMENT

SYSTEM	STANDARD EQUIPMENT
Engine	EPA approved Tier 4 Cat C15 heavy duty diesel engine Heavy duty air cleaner with service indicator 45-Amp charging alternator Fuel filters – Duplex primary with integral water separator and change-over valve allowing filters to be changed while engine is running and engine mounted secondary Fuel cooler and electric priming pump Lubricating oil system including pump, integral oil cooler, lube oil, filter, crankcase breather system Oil drain line with internal valve routed to connection point accessible from exterior 500 hour oil change intervals Jacket water heater with AC circulation pump Electronic ADEM™ A4 controls 24V electric starting motors with battery rack and cables
Generator	Three-phase, random wound, Coastal Insulation protection, 0.6667 pitch, permanent magnet excited, Class H insulation with Class F temperature rise Includes anti-condensation heaters (120/240V 1.2 kW) 12-lead design, with voltage changeover link board 6-lead design, (600 V) Cat Digital Voltage Regulator (Cat DVR) with VAR/PF control
Containerized Module	20' ISO high cube container 2-axle, 20' ISO container chassis Sound attenuated air intake louvers and 2 lockable personnel doors with panic release Sound attenuated 72 dB(A) @ 7m Interior walls and ceilings insulated with 100 mm of acoustic paneling Floor of container insulated with acoustic glass and covered with galvanized steel Side bus bar access door, external access load connection bus bars Shore power connection via distribution block connections for jacket water heater, battery charger, space heaters, generator condensate heaters and internal duplex service receptacle Customer convenience panel with multiple receptacles Lighting 3 DC, one single duplex service receptacle, 1 external break-glass emergency stop push button 700 gal fuel tank, UL listed, double wall, 24 hr runtime @ 75% prime +10% rating External lockable connections for fuel fill Spill containment 110% of all engine fluids Auxiliary connections for customer supplied fuel transfer systems Two oversized maintenance-free batteries, battery rack, 20-Amp battery charger, and battery maintainer Hospital grade, internally insulated, disc-shaped exhaust silencer with vertical discharge Vibration isolators, corrosion resistant hardware and hinges External drain access to standard fluids Two 4.5 kg (10lb) carbon dioxide fire extinguishers Standard Cat rental decals and painted standard Cat power module white
Cooling	Standard cooling provides 43° C ambient capability (60 Hz) at prime +10% rating Vertically mounted radiator, with vertical air discharge from the container Coolant drain line with internal valve Coolant sight gauge, level switch and shutdown 50/50 Ethylene Extended Life Glycol
Genset Controls and Protection	EMCP 4.4 genset mounted controller Automatic start/stop with cool down timer Generator Protection features: 32, 32RV, 46, 50/51, 27/59, 81 O/U Utility multi-function relay (UMR) protection features: 24, 25, 27, 27G, 32, 40, 43, 46, 47, 50, 51, 51N, 59, 59G, 60FL, 67, 79, 81O/U with 4 programmable relay inputs and 5 programmable relay outputs (Optional) Reverse compatible for interface to legacy power modules 2000A electrically operated generator circuit breaker Multi-mode operation (island, multi-island and utility parallel (with optional UMR)), load sharing (multi-unit only) Manual and automatic paralleling capability Metering display: voltage, current, frequency, power factor, kW, WHM, kVAR, and synchroscope
Quality	Factory testing of standard generator set and complete power module UL, NEMA, ISO and IEEE standards O&M manuals

XQ500 RENTAL

CAT

TECHNICAL DATA

CAT GENERATOR

Frame Size LC6134G
Pitch 0.6667
No. of poles 4
Excitation ..... Static regulated brushless PM excited
Number of bearings ..... Single bearing, close coupled
Insulation ..... Class H
Enclosure ..... Drip proof IP23
Alignment ..... Pilot shaft
Overspeed capability – % of rated ..... 125% of rated
Voltage regulator ..... 3 phase sensing with Volts-per-Hertz
Voltage regulation ..... Less than ± 1/2% voltage gain
Adjustable to compensate for engine speed droop and line loss
Wave form deviation 3%
Telephone Influence Factor (TIF) ..... Less than 50
Harmonic Distortion (THD) ..... Less than 5%

CAT DIESEL ENGINE

C15 ATAAC, I-6 4-stroke water cooled diesel
Bore – mm (in) ..... 137.2 mm (5.4 in)
Stroke – mm (in) ..... 171.4 mm (6.75 in)
Displacement – L (cu in) ..... 15.20 L (927.56 in³)
Compression ratio 16:1
Engine RPM 1800
Aspiration ..... TA
Fuel system ..... MEUIC
Governor type ..... ADEM A4
Fuel ..... Requires ULSD

Generator Set Technical Data	Units	60Hz Standby	60Hz Prime
Power Rating	kW (KVA)	500 (625)	455 (568)
Performance Specification		-	-
Lubricating System Oil pan capacity	L (gal)	74 (19.5)	74 (19.5)
Fuel System Fuel consumption 100% Load 75% Load 50% Load Fuel Tank Capacity Running time @ 75% rating	 L/hr (gal/hr) L/hr (gal/hr) L/hr (gal/hr) L (gal) Hr	 136 (35.9) 107 (28.3) 78 (20.5) 2850 (700) 24	 126 (33.2) 99 (26.2) 72 (19) 2850 (700) 24
Cooling System Ambient Capability Engine & Radiator coolant capacity Engine coolant capacity	 °C (°F) L (gal) L (gal)	 43 (109) 100.7 (26.6) 26.9 (7.1)	 43 (109) 100.7 (26.6) 26.9 (7.1)
Air Requirements Combustion air flow Maximum dirty air cleaner restriction	 m³/min (cfm) kPa (in H_2O)	 35.2 (1243) 6.2 (24.9)	 34.6 (1223) 6.2 (24.9)
Exhaust System Exhaust flow at rated Exhaust temperature at rated kW – dry exhaust	 m³/min (cfm) °C (°F)	 90.2 (3185) 490 (914)	 86.7 (3063) 472 (882)
Noise Rating (with enclosure)* @ 7 meters (23 feet)	dB(A)	72	72
Emissions (regulation) NO_x CO HC PM	 g/hp-hr g/hp-hr g/hp-hr g/hp-hr	 2.6 .11 0.03 0.075	 2.6 .11 0.03 0.075

Model	Length mm (in)	Width mm (in)	Height mm (in)	Weight with Lube oil and Coolant kg (lb)	Weight with fuel, lube oil and coolant Kg (lb)
XQ500 w/o chassis	6096 (240)	2438 (96)	2591 (102)	10247 (22590)	12831 (28508)
XQ500 w/ chassis	6096 (240)	2438 (96)	3810 (150)	13626 (30040)	15899 (35050)

STANDARD FEATURES

EMCP 4.4 LOCAL CONTROL PANEL
- Generator mounted EMCP 4.4 provides power metering, protective relaying and engine and generator control and monitoring.
- NEMA 12, IP44 Dust Proof Enclosure
- UL508A Listed
- Convenient service access for Cat Service tools (service tools not included)
- Integration with the Cat DVR provides enhanced system monitoring
- Ability to view and reset diagnostics of all controls networked on primary CAN datalink eliminates need for separate service tools for troubleshooting.
- True RMS AC metering, 3 phase

EMCP 4.4 ENGINE OPERATOR INTERFACE
- Controls
  - Run/Auto/Stop
  - Emergency Stop
  - Speed Adjust
  - Cycle crank
  - Voltage Adjust
  - Cool-down timer
- Engine Monitoring
  - RPM
  - DC Volts
  - Operating hours
  - Oil pressure
  - Coolant Temperature
  - Oil Temperature
- Generator Monitoring
  - L-L volts, L-N volts, phase amps
  - Average volts, Amps, Frequency
  - eKW, kVA, kVAR, kW-hr, %kW
  - Power Factor (Average, Phase)
  - kW-hr, kVA-hr (total)
- Shutdowns with common indicating light for
  - Low oil pressure
  - Overspeed
  - High Coolant Temp
  - High Oil Temperature
  - Failure to Start (Overcrank)
  - Emergency stop
  - Low Coolant level
- Emergency stop pushbutton
- Panel illuminating lights
- Display navigation keys including two shortcut keys for Engine Parameters or Generator Parameters
- Fuel level monitoring and control

EMCP 4.4 GENERATOR PROTECTIVE RELAYING
- Generator protective features provided by EMCP 4.4
  - Phase over/under voltage (Device 27/59)
  - Over/Under frequency (Device 81 O/U)
  - Reverse Power (Device 32/32RV)
  - Current Balance (46)
  - Overcurrent (Device 50/51) (GCB trip unit)
  - Loss of Excitation (Device 40) (Cat DVR)
  - Generator Phase Sequence

VOLTAGE REGULATION AND POWER FACTOR CONTROL CIRCUITRY
- Generator mounted automatic voltage regulator, microprocessor based
- Manual raise/lower voltage adjust capability and VAR/power factor control circuitry for maintaining constant generator power factor while paralleled with the utility. Voltage and power factor adjustments are performed on the Generator Paralleling Control
- Includes RFI suppression, exciter limiter and exciter diode monitoring

CIRCUIT BREAKER
- 2000A fixed type, 3 poles, genset mounted, electrically operated, insulated case CB
- Solid state trip unit for overload (time overcurrent) and fault (instantaneous) overcurrent protection.
- Includes DC shunt trip coil activated on any monitored engine or electrical fault, 100 KA-interrupting capacity at 460 VAC
- Under-voltage release

TRANSFORMERS
- CT's rated 2000:5 with 200:5 secondaries wired to shorting terminal strips
- Potential transformers 4:1 ratio with primary and secondary fuse protection (with optional UMR)

DISTRIBUTION
- Three phase, plus full rated neutral, bus bars are tin-plated copper with NEMA standard hole pattern for connection of customer load cables and generator cables
- Bus bars are sized for full load capacity of the generator set at 0.8 power factor
- Includes ground bus, tin-plated copper, for connection to the generator frame ground and field ground cable
- Customer convenience panel with multiple output receptacles
  - 1 – 240V, 50A Twist Lock
  - 1 – 240V, 20A Twist Lock
  - 2 – 120V, 20A Twist Lock
  - 2 – 120V, 20A Ground Fault Interrupters
  - 2 – 120V, 15A Duplex Receptacles with GFI

XQ500 RENTAL

CAT

CONTAINER
- 20' ISO high cube container
- Painted standard Cat Power Module white
- Sound attenuated air intake louvers
- Floor insulated with acoustic glass and covered by galvanized steel
- Two lockable personnel doors with panic release
- Two fire extinguishers
- External drain access to standard fluids

EXHAUST SILENCER
- Hospital grade, internally insulated, disc shaped exhaust silencer with vertical discharge

FUEL TANK
- UL Listed 700 gallon double walled tank provides 24hr runtime at 75% prime +10% rating

SHORE POWER Three
- One 110V shore power connections for jacket water heater
- One 110V for generator space heater, battery charger and single duplex service receptacle

INTERNAL LIGHTING
- Three internal DC lights with one timer and two switches installed at each side of the container door
- One single duplex service receptacle connected to shore and generator power with automatic switchover

BATTERY CHARGER AND BATTERIES
- 24 VDC/20A battery charger with float/equalize modes and charging ammeter
- Two oversized maintenance free batteries

EMERGENCY STOP PUSHBUTTON
- One external, emergency stop pushbutton (ESP)

TRAILER
- Two axle with Anti-lock brake system
- Goodyear G314 295/75R225 Load Range G

LINK BOARD ASSEMBLY
- 2000A link board for 208/240/400/480 wye operation
- Reconnection via movable link board
- Includes switch to determine operation mode

AC DISTRIBUTION
- Provides 120 VAC for all module accessories
- Includes controls to de-energize jacket water heaters and generator space heater when the engine is running

UTILITY MULTI-FUNCTION RELAY (UMR) (OPTIONAL)

Basler Utility Multi-function Relay (UMR) IPS-100 provides the following utility/intertie protection features:
- Synch Check (Device 25)
- Phase under voltage, 2 stage (Device 27)
- Reverse Power (Device 32)
- Negative sequence overvoltage (Device 47)
- Phase time overcurrent (Device 51)
- Neutral overcurrent (Device 51N)
- Phase overvoltage, 2 stage (Device 59)
- Under frequency, 2 stage (Device 81U)
- Over frequency (Device 81O)

MODES OF OPERATION

- Provides for single unit stand-alone operation, island mode paralleling and load sharing with other power modules, and single unit-to-utility mode paralleling for base load control (with open transition between paralleling modes)
- Island mode paralleling features:
  - Lead unit select control allows single unit to connect to a dead bus or HWDBA Hard Wired Dead Bus Arbitration to allow first unit up to voltage and speed to be first unit to connect to a dead bus
  - Auto synchronization (voltage & phase matching)
  - Load sharing (kW) analog signal (like units & legacy compatible)
  - Load sharing (kVAR) analog signal (like units only)
- Utility mode paralleling features:
  - Auto synchronization (voltage & phase matching)
  - Base-load control (programmable set-point or potentiometer adjust)
  - Soft load/unload (programmable, shared set-point)
  - Power Factor control (programmable set-point)

SINGLE UNIT STAND-ALONE AND MULTI-UNIT ISLAND OPERATION

1. Utility Standby Mode (Normal)
   a. The utility is providing power for the plant loads.
   b. The PM Generator breaker is open.
   c. The PM is in automatic standby mode to respond to a utility failure
2. Emergency Mode (Emergency)
   a. Utility Failure
      1) The customer protective relaying senses a utility abnormal condition.
      2) A run request is sent to the PM Generator plant.
      3) The first PM generator to reach rated to voltage and frequency is closed to the bus.
      4) In Multi-Unit Island Mode, the remaining PM Generators are paralleled to the bus as they reach rated voltage and frequency. This function is performed via the lead unit select jumper and interconnect wiring connected between the Power Modules.
      5) Plant load is transferred to the Power Modules, which share load equally via load share lines.

SINGLE UNIT BASE LOAD OPERATION

1. Utility Mode (Normal)
   a. The utility is providing power for the plant loads.
   b. The PM is in auto mode and the generator breaker is open.
   c. The PM is interconnected to the utility breaker aux contact, lead unit jumper is not installed and load share lines are not connected
   d. The Paralleling controls automatically detect utility parallel mode when the utility aux contact is closed.
2. Base Load Mode
   a) Unit receives remote run request and starts
   b) Unit reaches rated voltage and frequency.
   c) UMR performs sync-check to permit generator breaker to close.
   d) Unit ramps to Base-Load setpoint at programmed ramp time.
   e) Unit continues to run until remote run request is removed or unit is stopped at control panel.

XQ500 RENTAL

RATING DEFINITIONS AND CONDITIONS

Meets or Exceeds International Specifications:
AS1359, CSA, IEC60034-1, ISO3046, ISO8528, NEMA MG 1-22, NEMA MG 1-33, UL508A, 72/23/EEC, 98/37/EC, 2004/108/EC

Prime - Output available with varying load for an unlimited time. Average power output is 70% of the prime power rating. Typical peak demand is 100% of prime rated ekW with 10% overload capability for emergency use for a maximum of 1 hour in 12. Overload operation cannot exceed 25 hours per year. Prime power in accordance with ISO3046. Prime ambients shown indicate ambient temperature at 100% load which results in a coolant top tank temperature just below the alarm temperature.

Ratings are based on SAE J1349 standard conditions. These ratings also apply at ISO3046 standard conditions. Fuel rates are based on fuel oil of 35° API [16° C (60° F)] gravity having an LHV of 42 780 kJ/kg (18,390 Btu/lb) when used at 29° C (85° F) and weighing 838.9 g/liter (7.001 lbs/U.S. gal.). Additional ratings may be available for specific customer requirements, contact your Caterpillar representative for details. For information regarding Low Sulfur fuel and Biodiesel capability, please consult your Cat dealer.

LEHX0008-03 (01/13)

AGREEMENT TO ENTER UPON AND USE LAND AND RELEASE OF LIABILITY

This Agreement is entered into by and between Golden Triangle Construction Company, Inc. and Ogden Property's regarding Golden Triangle's use of land owned by Property Owner for **RT 30 Overlay Project from Feb 1-2017 to Oct 1 - 2017** and shall be deemed in full force and effect on the date set forth below by the Parties' execution of the Agreement..

1. Property Owner asserts that he/she is the owner of land in fee simple located at the following address: Corner Harris Rd + Fulton Lane (the "Property").

2. Golden Triangle is currently performing work on the **RT 30 Overlay Project – Chester WV**

3. Golden Triangle and Property Owner have agreed that Golden Triangle may enter upon the Property and thereafter utilize said Property for the following purposes: **1 - to bring certain fill materials from the Project site and permanently dump said materials upon Property Owner's land 2- staging area for equipment, material and concrete batch plant** over a period of time commencing **Feb 1-2017** and continuing from time to time, and as frequently as required by Golden Triangle until such time that Golden Triangle no longer requires use of or entry upon the Property.

4. At all times, Property Owner warrants that the Property is free of defects, latent, hidden or obvious dangers which may cause injury or damage to person or property.

5. **THIS PARAGRAPH MAY OR MAY NOT BE INSERTED DEPENDING UPON THE CONSIDERATION BEING PROVIDED FOR THE USE OF THE PROPERTY.** To the extent only that Golden Triangle's use of the Property causes material damage to said Property, Golden Triangle agrees to restore the Property to the condition of the Property immediately prior to Golden Triangle's entry upon said Property. Property Owner agrees that any and all said restoration shall be agreed upon by owner and Golden Triangle and after Golden Triangle has completed its use of the Property and the Project as outlined herein. Golden Triangle shall not be liable for and will not reimburse payments made by Property Owner for work performed without Golden Triangle's express written consent to restore, improve or otherwise perform work on the Property.

6. It is understood and agreed that Golden Triangle may unilaterally terminate this Agreement at any time.

7. **USE WHERE APPROPRIATE:** In sole consideration of Property Owner's Agreement to allow Golden Triangle access to and use of the Property as set forth in Paragraph 3 above, Golden Triangle agrees to provide Property Owner with the following improvements to the Property: Said improvements shall be performed at Golden Triangle's discretion by Golden Triangle and after Golden Triangle has completed its use of the Property and the Project as outlined herein. Golden Triangle agrees that any necessary restoration shall take place within 30 days of Golden Triangle's completion of its work. Golden Triangle shall not be liable for and will not reimburse payments made by Property Owner for work performed without Golden Triangle's express written consent to restore, improve or otherwise perform work on the Property. Property Owner expressly agrees that he or she shall be entitled to no greater or additional improvements,

compensation, benefits, payments or damages whatsoever other than the improvements set forth herein. This provision is intended to and shall serve as a limitation of liability such that Property Owner agrees that he/she shall be entitled to no additional payments or damages, including but not limited to damage to person or property, reimbursement for fines or penalties or loss of use, arising out of Golden Triangle's use of the Property as set forth herein. Property Owner further agrees not to institute any claims or lawsuits against Golden Triangle arising out of the use of the Property.

OR

8. In sole consideration of Property Owner's Agreement to allow Golden Triangle access to and use of the Property as set forth in Paragraph 3 above, Golden Triangle agrees to pay Property Owner the total sum of $1 (One U.S. Dollar). Property Owner expressly agrees that he or she shall be entitled to no greater or additional improvements, compensation, benefits, payments or damages whatsoever other than the improvements set forth herein. This provision is intended to and shall serve as a limitation of liability such that Property Owner agrees that he/she shall be entitled to no additional payments or damages, including but not limited to damage to person or property, reimbursement for fines or penalties or loss of use, arising out of Golden Triangle's use of the Property as set forth herein. Property Owner further agrees not to institute any claims or lawsuits against Golden Triangle arising out of the use of the Property.

9. Property Owner hereby understands and agrees that Golden Triangle will be depositing broken concrete, concrete slabs & dirt from the project. Golden Triangle will develop the necessary plans for wasting said material. Golden Triangle & property owner will be "co-permittees" of said permit. At the completion of project permit will become possession of property owner and Golden Triangle will be removed from permit. Golden Triangle to obtain and pay for said permit and all expenses regarding dump site and plant area.

10. Property Owner shall identify the location where the materials shall be stored/dumped on the Property and shall provide Golden Triangle with free and clear access to the storage and/or dump site. Property Owner acknowledges and agrees that the materials will be transported to the Property in large commercial vehicles and trucks, and will unload the materials with other large pieces of equipment.

11. Golden Triangle agrees to provide Property Owner with a certificate of insurance identifying Property Owner as an Additional Insured on its Commercial General Liability insurance policy which shall apply only in the event that an employee or representative of Golden Triangle suffers any injury to person or property while performing the activities identified in this Agreement.

C [illegible] 1/1/17

~~12. Property Owner, on behalf of itself, its successors, heirs, and assigns owners, insurers, representatives, agents and employees hereby waives any and all liability which may be attributed to or alleged against Golden Triangle its predecessors, successors, agents, consultants. representatives and employees for any damages whatsoever, including but not limited to claims for personal injury, damages including property damages or business interruption, or any other loss arising out of or related Golden Triangle's use of the Property.~~

12. 11. To the fullest extent permitted by law, Property Owner agrees to defend, indemnify and hold harmless Golden Triangle, its owners, officers, successors, assignees, agents, consultants, bonding companies, insurers, sureties, representatives, and employees, as well as its subcontractors, and the Owner

of the Project, from and against any claim, at law or in equity, for breach or contract, tort, bodily injury, damages, including property damage, business interruption or any other loss whatsoever, including costs of settlements, judgments, damages and expenses, including attorneys fees and costs (including reasonable attorney's fees incurred in establishing a right to indemnity) which may arise out of or relate to this Agreement, the Property Owner, Property or the Project. This provision shall survive the termination of this Agreement.

~~12.~~ 13. Property Owner agrees to name Golden Triangle and _____ as an additional insured on its policy of insurance applicable to the Property for the purpose of providing coverage in the event of any incident, accident or damage on or at the Property in connection with Golden Triangle's presence upon, activities at or the materials dumped or otherwise stored on the Property.

~~13.~~ 14. There are no intended third party beneficiaries to this Agreement.

IN WITNESS WHEREOF, in consideration of the agreements, promises and undertakings set forth herein, and for other good and valuable consideration, the receipt and sufficiency of which is hereby acknowledged and intending to be legally bound hereby, a representative each Party with the authority to execute this Agreement, has caused this Agreement to be executed as of the date and year set forth beneath such party's signature, and agrees to the terms set forth in this document.

ATTEST:

Thomas C Ogden

By: Thomas C Ogden

Title: OWNER

Date: 1-11-17

ATTEST:

GOLDEN TRIANGLE CONSTRUCTION COMPANY, INC.

By: CHIP DALESHORE

Title: PROJ. SUPT.

Date: 1-11-17