TC Energy
700 Louisiana Street, Suite, 14104A
Tel: 832-320-5880
shrishti_chhabra@tcenergy.com

TC Energy

December 19, 2019

DEC 20 2019

Mr. William F. Durham, Director
WVDEP - Division of Air Quality
601 57th Street SE
Charleston, West Virginia 25304

RE: Title V Operating Permit Application
Columbia Gas Transmission, LLC
White Oak Compressor Station (Facility ID #: 013-00017)

Dear Mr. Durham,

Attached is an initial Title V permit application for the Columbia Gas Transmission, LLC – White Oak Compressor Station, which is located in Calhoun County, West Virginia. The Station was issued Permit to Construct R13-3315 on November 14, 2016. In accordance with 45 CSR 30, this application is being submitted within 12 months after commencing operation.

This package contains the general application forms along with all required attachments for an initial Title V permit application.

The Station's potential to emit (PTE) exceeds 100 tons per year for carbon monoxide; therefore, the Station is considered a Title V source for permitting purposes. The Station's PTE does not exceed Prevention of Significant Deterioration (PSD) applicability thresholds; therefore, the Station is not considered a major PSD source.

Should you have any questions or need additional information, please feel free to contact me at (832) 320 5880 or via email at shrishti_chhabra@tcenergy.com.

Sincerely,

Shrishti Chhabra
Principal Environmental Engineer

Attachments

DEC 20 2019

APPLICATION FOR 45 CSR 30 PERMIT TO OPERATE

Columbia Gas Transmission, LLC
White Oak Compressor Station
Calhoun County, West Virginia

December 2019

Table of Contents

DEC 20 2019

General Application Form
Attachment A: Area Map
Attachment B: Plot Plan
Attachment C: Process Flow Diagram
Attachment D: Equipment Table
Attachment E: Emission Unit Forms
Supplemental Attachment: Supporting Emissions Calculations
Supplemental Attachment: Executive Summary

WEST VIRGINIA DEPARTMENT OF ENVIRONMENTAL PROTECTION

DIVISION OF AIR QUALITY

601 57th Street SE
Charleston, WV 25304
Phone: (304) 926-0475
www.dep.wv.gov/daq

DEC 20 2019

INITIAL/RENEWAL TITLE V PERMIT APPLICATION - GENERAL FORMS

Section 1: General Information

1. **Name of Applicant (As registered with the WV Secretary of State's Office):** Columbia Gas Transmission, LLC	2. **Facility Name or Location:** White Oak Compressor Station
3. **DAQ Plant ID No.:** 0 1 3 — 0 0 0 1 7	4. **Federal Employer ID No. (FEIN):** 3 1 0 8 0 2 4 3 5

5. **Permit Application Type:**

☒ Initial Permit — When did operations commence? 03/03/2019
☐ Permit Renewal — What is the expiration date of the existing permit? MM/DD/YYYY
☐ Update to Initial/Renewal Permit Application

6. **Type of Business Entity:** ☐ Corporation ☐ Governmental Agency ☒ LLC ☐ Partnership ☐ Limited Partnership	7. **Is the Applicant the:** ☐ Owner ☐ Operator ☒ Both If the Applicant is not both the owner and operator, please provide the name and address of the other party. _____ _____ _____
8. **Number of onsite employees:** 4	

9. **Governmental Code:**

☒ Privately owned and operated; 0
☐ Federally owned and operated; 1
☐ State government owned and operated; 2
☐ County government owned and operated; 3
☐ Municipality government owned and operated; 4
☐ District government owned and operated; 5

10. **Business Confidentiality Claims**

Does this application include confidential information (per 45CSR31)? ☐ Yes ☒ No

If yes, identify each segment of information on each page that is submitted as confidential, and provide justification for each segment claimed confidential, including the criteria under 45CSR§31-4.1, and in accordance with the DAQ's *"PRECAUTIONARY NOTICE-CLAIMS OF CONFIDENTIALITY"* guidance.

11. Mailing Address		
Street or P.O. Box: 700 Louisiana Street, Suite 700		
City: Houston	**State:** TX	**Zip:** 77002
Telephone Number: (304) 357-2000	**Fax Number:** ( ) -	

12. Facility Location		
Street: 1752 Frederick Ridge Road (Rt. 21/3)	**City:** Smithville	**County:** Calhoun
UTM Easting: 487.7 km	**UTM Northing:** 4,321.4 km	**Zone:** ☒ 17 or ☐ 18
Directions: From the town of Brohard, head southeast on Brohard Rd. toward Dutchman Run and turn right to stay on Brohard Rd. Continue on Co. Route 5/3. In approximately 1 mile, turn left onto Co. Route 21/3. The Station will be on the right in approximately 1.6 miles.		
Portable Source? ☐ Yes ☒ No		
Is facility located within a nonattainment area? ☐ Yes ☒ No		**If yes, for what air pollutants?**
Is facility located within 50 miles of another state? ☒ Yes ☐ No		**If yes, name the affected state(s).** Ohio
Is facility located within 100 km of a Class I Area[1]? ☐ Yes ☒ No **If no, do emissions impact a Class I Area[1]?** ☐ Yes ☒ No		**If yes, name the area(s).**
[1] *Class I areas include Dolly Sods and Otter Creek Wilderness Areas in West Virginia, and Shenandoah National Park and James River Face Wilderness Area in Virginia.*		

13. Contact Information		
Responsible Official: Tim Chambers		**Title:** Manager of Operations
Street or P.O. Box: 607 Spencer Rd		
City: Clendenin	**State:** W V	**Zip:** 25045
Telephone Number: (304) 548-1612	**Fax Number:** ( ) -	
E-mail address: timothy_chambers@tcenergy.com		
Environmental Contact: Shrishti Chhabra		**Title:** Principal Engineer
Street or P.O. Box: 700 Louisiana Street, Suite 14104A		
City: Houston	**State:** TX	**Zip: 77002-2700**
Telephone Number: (832) 320-5880	**Fax Number:** ( ) -	
E-mail address: shrishti_chhabra@tcenergy.com		
Application Preparer: Jennifer Ehrhardt		**Title:** Project Manager
Company: AECOM		
Street or P.O. Box: 510 Carnegie Center		
City: Princeton	**State:** NJ	**Zip: 08540-**
Telephone Number: (609) 720-2094	**Fax Number:** ( ) -	
E-mail address: jennifer.ehrhardt@aecom.com		

14. Facility Description

List all processes, products, NAICS and SIC codes for normal operation, in order of priority. Also list any process, products, NAICS and SIC codes associated with any alternative operating scenarios if different from those listed for normal operation.

Process	Products	NAICS	SIC
Natural Gas Transmission		486210	4922

Provide a general description of operations.

Natural Gas Compressor Station

15. Provide an **Area Map** showing plant location as **ATTACHMENT A**.

16. Provide a **Plot Plan(s)**, e.g. scaled map(s) and/or sketch(es) showing the location of the property on which the stationary source(s) is located as **ATTACHMENT B**. For instructions, refer to "Plot Plan - Guidelines."

17. Provide a detailed **Process Flow Diagram(s)** showing each process or emissions unit as **ATTACHMENT C**. Process Flow Diagrams should show all emission units, control equipment, emission points, and their relationships.

Section 2: Applicable Requirements

18. Applicable Requirements Summary	
Instructions: Mark all applicable requirements.	
☐ SIP	☐ FIP
☒ Minor source NSR (45CSR13)	☐ PSD (45CSR14)
☐ NESHAP (45CSR34)	☐ Nonattainment NSR (45CSR19)
☒ Section 111 NSPS	☒ Section 112(d) MACT standards
☐ Section 112(g) Case-by-case MACT	☐ 112(r) RMP
☐ Section 112(i) Early reduction of HAP	☐ Consumer/commercial prod. reqts., section 183(e)
☐ Section 129 Standards/Reqts.	☐ Stratospheric ozone (Title VI)
☐ Tank vessel reqt., section 183(f)	☐ Emissions cap 45CSR§30-2.6.1
☐ NAAQS, increments or visibility (temp. sources)	☐ 45CSR27 State enforceable only rule
☐ 45CSR4 State enforceable only rule	☐ Acid Rain (Title IV, 45CSR33)
☐ Emissions Trading and Banking (45CSR28)	☐ Compliance Assurance Monitoring (40CFR64)
☐ CAIR NO_x Annual Trading Program (45CSR39)	☐ CAIR NO_x Ozone Season Trading Program (45CSR40)
☐ CAIR SO_2 Trading Program (45CSR41)	

19. Non Applicability Determinations

List all requirements which the source has determined not applicable and for which a permit shield is requested. The listing shall also include the rule citation and the reason why the shield applies.

40 CFR 60 Subpart Dc - The heaters are less than the 10 MMBtu/hr applicability threshold in 40 CFR 60.40c(a).

40 CFR 60 Subpart OOOO - The units are not affected facilities listed under 40 CFR 60.5365.

☒ Permit Shield

19. Non Applicability Determinations *(Continued)* - *Attach additional pages as necessary.*

List all requirements which the source has determined not applicable and for which a permit shield is requested. The listing shall also include the rule citation and the reason why the shield applies.

☐ Permit Shield

20. Facility-Wide Applicable Requirements

List all facility-wide applicable requirements. For each applicable requirement, include the underlying rule/regulation citation and/or construction permit with the condition number. (*Note: Title V permit condition numbers alone are not the underlying applicable requirements*).

- R13-3315 Condition 3.1.4: Do not discharge air pollutants which cause or contribute to an objectionable odor. [45CSR§4-3.1]
- R13-3315 Condition 3.3.1: Conduct stack tests as required and submit a report of the results within 60 days after test completion. [45CSR13]
- R13-3315 Condition 3.5.4.1: Submit a Certified Emissions Statement and pay fees on an annual basis. [45CSR30]

☐ Permit Shield

For all facility-wide applicable requirements listed above, provide monitoring/testing / recordkeeping / reporting which shall be used to demonstrate compliance. If the method is based on a permit or rule, include the condition number and/or citation. (Note: Each requirement listed above must have an associated method of demonstrating compliance. If there is not already a required method in place, then a method must be proposed.)

- R13-3315 Condition 3.4.1: Maintain records of all information required by the permit for at least five years.
- R13-3315 Condition 3.4.2: Maintain records of all odor complaints received, any investigation performed in response to such a complaint, and any responsive actions taken [45CSR4]
- R13-3315 Condition 3.5.4.2: Submit the Certified Emissions Statement invoice and fee no later than 30 days prior to initial date of startup. Maintain a receipt for the appropriate fee on the premises. [45CSR30]

Are you in compliance with all facility-wide applicable requirements? ☒ Yes ☐ No

If no, complete the **Schedule of Compliance Form** as **ATTACHMENT F**.

20. Facility-Wide Applicable Requirements *(Continued)* - *Attach additional pages as necessary.*

List all facility-wide applicable requirements. For each applicable requirement, include the rule citation and/or permit with the condition number.

☐ Permit Shield

For all facility-wide applicable requirements listed above, provide monitoring/testing/recordkeeping/ reporting which shall be used to demonstrate compliance. If the method is based on a permit or rule, include the condition number and/or citation. (Note: Each requirement listed above must have an associated method of demonstrating compliance. If there is not already a required method in place, then a method must be proposed.)

Are you in compliance with all facility-wide applicable requirements? ☐ Yes ☐ No

If no, complete the **Schedule of Compliance Form** as **ATTACHMENT F**.

21. **Active Permits/Consent Orders**		
Permit or Consent Order Number	Date of Issuance MM/DD/YYYY	List any Permit Determinations that Affect the Permit *(if any)*
R13-3315	11/14/2016	
	/ /	
	/ /	
	/ /	
	/ /	
	/ /	
	/ /	
	/ /	
	/ /	
	/ /	
	/ /	
	/ /	
	/ /	
	/ /	
	/ /	
	/ /	
	/ /	
	/ /	
	/ /	
	/ /	
	/ /	
	/ /	
	/ /	
	/ /	

22. **Inactive Permits/Obsolete Permit Conditions**		
Permit Number	Date of Issuance	Permit Condition Number
	MM/DD/YYYY	
	/ /	
	/ /	
	/ /	
	/ /	
	/ /	
	/ /	
	/ /	
	/ /	
	/ /	
	/ /	
	/ /	
	/ /	
	/ /	
	/ /	
	/ /	
	/ /	
	/ /	
	/ /	
	/ /	
	/ /	
	/ /	
	/ /	
	/ /	
	/ /	
	/ /	

Section 3: Facility-Wide Emissions

23. Facility-Wide Emissions Summary [Tons per Year]	
Criteria Pollutants	Potential Emissions
Carbon Monoxide (CO)	212.31
Nitrogen Oxides (NO_X)	89.34
Lead (Pb)	9.21E-06
Particulate Matter ($PM_{2.5}$)[1]	10.31
Particulate Matter (PM_{10})[1]	10.31
Total Particulate Matter (TSP)	10.31
Sulfur Dioxide (SO_2)	1.11
Volatile Organic Compounds (VOC)	18.07
Hazardous Air Pollutants[2]	Potential Emissions
Formaldehyde	1.25
Total HAPs	2.21
Regulated Pollutants other than Criteria and HAP	Potential Emissions

[1] $PM_{2.5}$ and PM_{10} are components of TSP.
[2] For HAPs that are also considered PM or VOCs, emissions should be included in both the HAPs section and the Criteria Pollutants section.

Section 4: Insignificant Activities

24. Insignificant Activities (Check all that apply)		
☐	1.	Air compressors and pneumatically operated equipment, including hand tools.
☒	2.	Air contaminant detectors or recorders, combustion controllers or shutoffs.
☒	3.	Any consumer product used in the same manner as in normal consumer use, provided the use results in a duration and frequency of exposure which are not greater than those experienced by consumer, and which may include, but not be limited to, personal use items; janitorial cleaning supplies, office supplies and supplies to maintain copying equipment.
☒	4.	Bathroom/toilet vent emissions.
☒	5.	Batteries and battery charging stations, except at battery manufacturing plants.
☐	6.	Bench-scale laboratory equipment used for physical or chemical analysis, but not lab fume hoods or vents. Many lab fume hoods or vents might qualify for treatment as insignificant (depending on the applicable SIP) or be grouped together for purposes of description.
☐	7.	Blacksmith forges.
☐	8.	Boiler water treatment operations, not including cooling towers.
☐	9.	Brazing, soldering or welding equipment used as an auxiliary to the principal equipment at the source.
☐	10.	CO_2 lasers, used only on metals and other materials which do not emit HAP in the process.
☒	11.	Combustion emissions from propulsion of mobile sources, except for vessel emissions from Outer Continental Shelf sources.
☒	12.	Combustion units designed and used exclusively for comfort heating that use liquid petroleum gas or natural gas as fuel.
☒	13.	Comfort air conditioning or ventilation systems not used to remove air contaminants generated by or released from specific units of equipment.
☐	14.	Demineralized water tanks and demineralizer vents.
☐	15.	Drop hammers or hydraulic presses for forging or metalworking.
☐	16.	Electric or steam-heated drying ovens and autoclaves, but not the emissions from the articles or substances being processed in the ovens or autoclaves or the boilers delivering the steam.
☐	17.	Emergency (backup) electrical generators at residential locations.
☐	18.	Emergency road flares.
☐	19.	Emission units which do not have any applicable requirements and which emit criteria pollutants (CO, NO_x, SO_2, VOC and PM) into the atmosphere at a rate of less than 1 pound per hour and less than 10,000 pounds per year aggregate total for each criteria pollutant from all emission units. Please specify all emission units for which this exemption applies along with the quantity of criteria pollutants emitted on an hourly and annual basis: _____ _____ _____ _____ _____ _____ _____ _____ _____

24. Insignificant Activities (Check all that apply)		
☐	20.	Emission units which do not have any applicable requirements and which emit hazardous air pollutants into the atmosphere at a rate of less than 0.1 pounds per hour and less than 1,000 pounds per year aggregate total for all HAPs from all emission sources. This limitation cannot be used for any source which emits dioxin/furans nor for toxic air pollutants as per 45CSR27. Please specify all emission units for which this exemption applies along with the quantity of hazardous air pollutants emitted on an hourly and annual basis: _____ _____ _____ _____ _____
☐	21.	Environmental chambers not using hazardous air pollutant (HAP) gases.
☒	22.	Equipment on the premises of industrial and manufacturing operations used solely for the purpose of preparing food for human consumption.
☐	23.	Equipment used exclusively to slaughter animals, but not including other equipment at slaughterhouses, such as rendering cookers, boilers, heating plants, incinerators, and electrical power generating equipment.
☐	24.	Equipment used for quality control/assurance or inspection purposes, including sampling equipment used to withdraw materials for analysis.
☐	25.	Equipment used for surface coating, painting, dipping or spray operations, except those that will emit VOC or HAP.
☐	26.	Fire suppression systems.
☒	27.	Firefighting equipment and the equipment used to train firefighters.
☐	28.	Flares used solely to indicate danger to the public.
☒	29.	Fugitive emission related to movement of passenger vehicle provided the emissions are not counted for applicability purposes and any required fugitive dust control plan or its equivalent is submitted.
☐	30.	Hand-held applicator equipment for hot melt adhesives with no VOC in the adhesive formulation.
☒	31.	Hand-held equipment for buffing, polishing, cutting, drilling, sawing, grinding, turning or machining wood, metal or plastic.
☐	32.	Humidity chambers.
☒	33.	Hydraulic and hydrostatic testing equipment.
☐	34.	Indoor or outdoor kerosene heaters.
☒	35.	Internal combustion engines used for landscaping purposes.
☐	36.	Laser trimmers using dust collection to prevent fugitive emissions.
☐	37.	Laundry activities, except for dry-cleaning and steam boilers.
☒	38.	Natural gas pressure regulator vents, excluding venting at oil and gas production facilities.
☐	39.	Oxygen scavenging (de-aeration) of water.
☐	40.	Ozone generators.

24. Insignificant Activities (Check all that apply)		
[X]	41.	Plant maintenance and upkeep activities (e.g., grounds-keeping, general repairs, cleaning, painting, welding, plumbing, re-tarring roofs, installing insulation, and paving parking lots) provided these activities are not conducted as part of a manufacturing process, are not related to the source's primary business activity, and not otherwise triggering a permit modification. (Cleaning and painting activities qualify if they are not subject to VOC or HAP control requirements. Asphalt batch plant owners/operators must still get a permit if otherwise requested.)
[X]	42.	Portable electrical generators that can be moved by hand from one location to another. "Moved by Hand" means that it can be moved without the assistance of any motorized or non-motorized vehicle, conveyance, or device.
[X]	43.	Process water filtration systems and demineralizers.
[X]	44.	Repair or maintenance shop activities not related to the source's primary business activity, not including emissions from surface coating or de-greasing (solvent metal cleaning) activities, and not otherwise triggering a permit modification.
[ ]	45.	Repairs or maintenance where no structural repairs are made and where no new air pollutant emitting facilities are installed or modified.
[ ]	46.	Routing calibration and maintenance of laboratory equipment or other analytical instruments.
[ ]	47.	Salt baths using nonvolatile salts that do not result in emissions of any regulated air pollutants. Shock chambers.
[ ]	48.	Shock chambers.
[ ]	49.	Solar simulators.
[X]	50.	Space heaters operating by direct heat transfer.
[ ]	51.	Steam cleaning operations.
[ ]	52.	Steam leaks.
[ ]	53.	Steam sterilizers.
[ ]	54.	Steam vents and safety relief valves.
[ ]	55.	Storage tanks, reservoirs, and pumping and handling equipment of any size containing soaps, vegetable oil, grease, animal fat, and nonvolatile aqueous salt solutions, provided appropriate lids and covers are utilized.
[X]	56.	Storage tanks, vessels, and containers holding or storing liquid substances that will not emit any VOC or HAP. Exemptions for storage tanks containing petroleum liquids or other volatile organic liquids should be based on size limits such as storage tank capacity and vapor pressure of liquids stored and are not appropriate for this list.
[X]	57.	Such other sources or activities as the Director may determine.
[X]	58.	Tobacco smoking rooms and areas.
[ ]	59.	Vents from continuous emissions monitors and other analyzers.

Section 5: Emission Units, Control Devices, and Emission Points

25. Equipment Table
Fill out the **Title V Equipment Table** and provide it as **ATTACHMENT D**.
26. Emission Units
For each emission unit listed in the **Title V Equipment Table**, fill out and provide an **Emission Unit Form** as **ATTACHMENT E**.
For each emission unit not in compliance with an applicable requirement, fill out a **Schedule of Compliance Form** as **ATTACHMENT F**.
27. Control Devices
For each control device listed in the **Title V Equipment Table**, fill out and provide an **Air Pollution Control Device Form** as **ATTACHMENT G**.
For any control device that is required on an emission unit in order to meet a standard or limitation for which the potential pre-control device emissions of an applicable regulated air pollutant is greater than or equal to the Title V Major Source Threshold Level, refer to the **Compliance Assurance Monitoring (CAM) Form(s)** for CAM applicability. Fill out and provide these forms, if applicable, for each Pollutant Specific Emission Unit (PSEU) as **ATTACHMENT H**.

Section 6: Certification of Information

28. Certification of Truth, Accuracy and Completeness and Certification of Compliance

*Note: This Certification must be signed by a responsible official. The **original**, signed in **blue ink**, must be submitted with the application. Applications without an **original** signed certification will be considered as incomplete.*

a. Certification of Truth, Accuracy and Completeness

I certify that I am a responsible official (as defined at 45CSR§30-2.38) and am accordingly authorized to make this submission on behalf of the owners or operators of the source described in this document and its attachments. I certify under penalty of law that I have personally examined and am familiar with the statements and information submitted in this document and all its attachments. Based on my inquiry of those individuals with primary responsibility for obtaining the information, I certify that the statements and information are to the best of my knowledge and belief true, accurate, and complete. I am aware that there are significant penalties for submitting false statements and information or omitting required statements and information, including the possibility of fine and/or imprisonment.

b. Compliance Certification

Except for requirements identified in the Title V Application for which compliance is not achieved, I, the undersigned hereby certify that, based on information and belief formed after reasonable inquiry, all air contaminant sources identified in this application are in compliance with all applicable requirements.

Responsible official (type or print)

Name: Tim Chambers	Title: Manager of Operations

Responsible official's signature:

Signature: Tim Chambers (Must be signed and dated in blue ink) Signature Date: 9-18-19

Note: Please check all applicable attachments included with this permit application:

☒	ATTACHMENT A: Area Map
☒	ATTACHMENT B: Plot Plan(s)
☒	ATTACHMENT C: Process Flow Diagram(s)
☒	ATTACHMENT D: Equipment Table
☒	ATTACHMENT E: Emission Unit Form(s)
☐	ATTACHMENT F: Schedule of Compliance Form(s)
☐	ATTACHMENT G: Air Pollution Control Device Form(s)
☐	ATTACHMENT H: Compliance Assurance Monitoring (CAM) Form(s)

All of the required forms and additional information can be found and downloaded from, the DEP website at www.dep.wv.gov/daq, requested by phone (304) 926-0475, and/or obtained through the mail.

Attachment A

Area Map

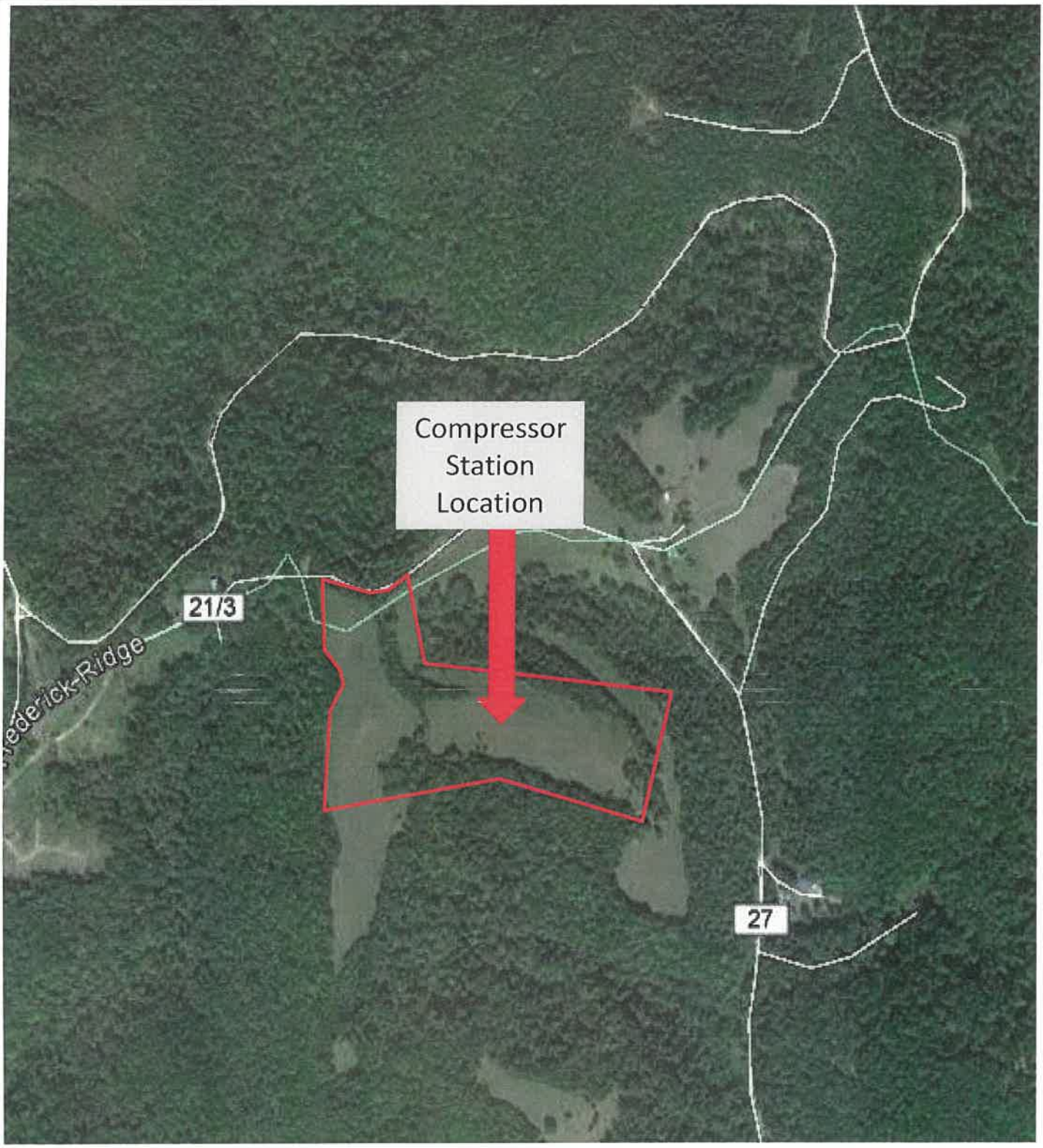

From the town of Brohard, head southeast on Brohard Rd. toward Dutchman Run and turn right to stay on Brohard Rd. Continue on Co. Route 5/3. In approximately 1 mile, turn left onto Co. Route 21/3. The Station will be on the right in approximately 1.6 miles.

	Attachment A
Date: May 2019	Facility Map White Oak Compressor Station

Attachment B

Plot Plan

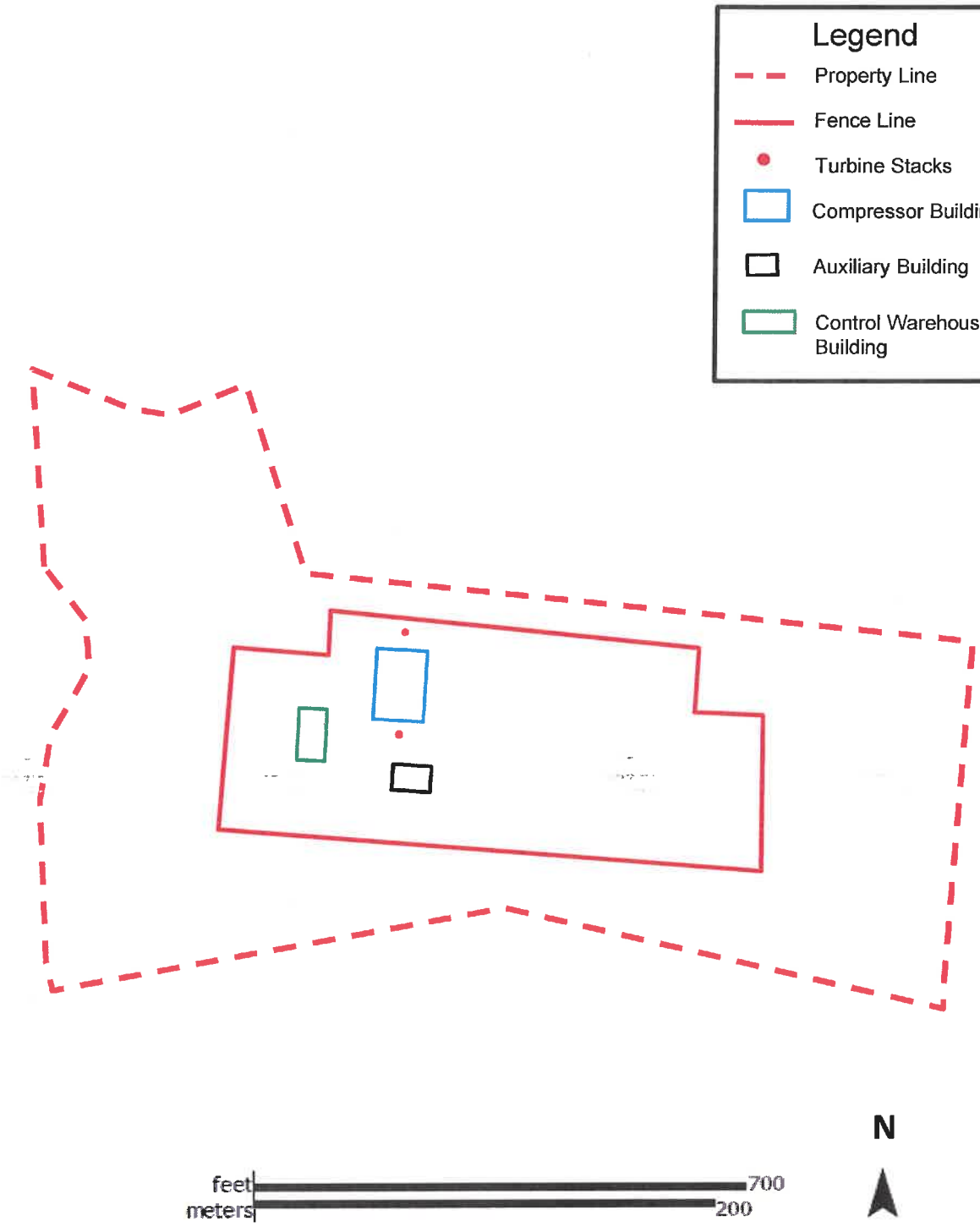

	Attachment B
Date: May 2019	Plot Plan White Oak Compressor Station

Attachment C

Process Flow Diagram

ATTACHMENT C
WHITE OAK COMPRESSOR STATION PROCESS FLOW DIAGRAM

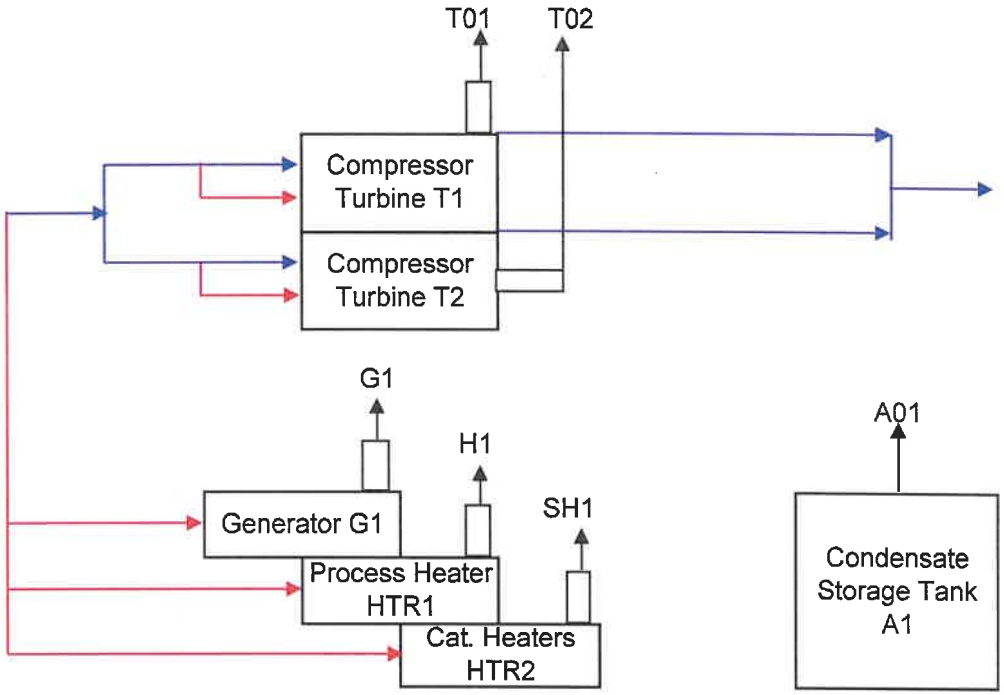

Transmission Gas Stream
Fuel Gas
Emission Stream

TransCanada
In business to deliver

Attachment D

Equipment Table

ATTACHMENT D - Title V Equipment Table

(includes all emission units at the facility except those designated as insignificant activities in Section 4, Item 24 of the General Forms)

Emission Point ID[1]	Control Device[1]	Emission Unit ID[1]	Emission Unit Description	Design Capacity	Year Installed/ Modified
T01	None	T1	Solar Titan 130E Turbine	20,912 HP @ 32°F	2017
T02	None	T2	Solar Titan 130E Turbine	20,912 HP @ 32°F	2017
G1	None	G1	Waukesha Emergency Generator	1,175 HP	2017
H1	None	HTR1	Process Heater	1.41 MMBTU/hr	2017
SH1	None	HTR2	40 Catalytic Heaters	40 x 0.072 MMBTU/hr	2017
A01	None	A1	Condensate Storage Tank	2,000 gal	2017

[1]For 45CSR13 permitted sources, the numbering system used for the emission points, control devices, and emission units should be consistent with the numbering system used in the 45CSR13 permit. For grandfathered sources, the numbering system should be consistent with registrations or emissions inventory previously submitted to DAQ. For emission points, control devices, and emissions units which have not been previously labeled, use the following 45CSR13 numbering system: 1S, 2S, 3S,... or other appropriate description for emission units; 1C, 2C, 3C,... or other appropriate designation for control devices; 1E, 2E, 3E, ... or other appropriate designation for emission points.

Attachment E

Emission Unit Forms

ATTACHMENT E - Emission Unit Form

Emission Unit Description

Emission unit ID number:	**Emission unit name:**	**List any control devices associated with this emission unit:**
T1	Solar Titan 130E Turbine #1	None

Provide a description of the emission unit (type, method of operation, design parameters, etc.):
Natural gas-fired Solar Titan 130E Turbine #1

Manufacturer:	**Model number:**	**Serial number:**
Solar	Titan 130-22402S	
Construction date:	**Installation date:**	**Modification date(s):**
03/03/2019 (In Service)	03/03/2019 (In Service)	N/A

Design Capacity (examples: furnaces - tons/hr, tanks - gallons):
20,912 HP @ 32°F

Maximum Hourly Throughput:	**Maximum Annual Throughput:**	**Maximum Operating Schedule:**
172,115 scf/hr (Based on 32°F)	1,508 MMscf/yr (Based on 32°F)	8,760 hr/yr

Fuel Usage Data **(fill out all applicable fields)**

Does this emission unit combust fuel? ___Yes _X_ No	**If yes, is it?** ___ Indirect Fired ___Direct Fired
Maximum design heat input and/or maximum horsepower rating: Max Heat Input: 175.56 MMBtu/hr (HHV, 32 °F) 20,912 HP @ 32°F	**Type and Btu/hr rating of burners:**

List the primary fuel type(s) and if applicable, the secondary fuel type(s). For each fuel type listed, provide the maximum hourly and annual fuel usage for each.
Natural Gas: 172,115 scf/hr; 1,508 MMscf/yr (Based on 32°F)

Describe each fuel expected to be used during the term of the permit.

Fuel Type	Max. Sulfur Content	Max. Ash Content	BTU Value
Natural Gas	0.25 grains S/100 scf	0	1,020 Btu/scf

Emissions Data		
Criteria Pollutants	Potential Emissions	
	PPH	TPY
Carbon Monoxide (CO)	9.62	104.84
Nitrogen Oxides (NO_X)	9.48	43.10
Lead (Pb)	-	-
Particulate Matter ($PM_{2.5}$)	1.16	5.08
Particulate Matter (PM_{10})	1.16	5.08
Total Particulate Matter (TSP)	1.16	5.08
Sulfur Dioxide (SO_2)	10.02	0.55
Volatile Organic Compounds (VOC)	1.10	5.52
Hazardous Air Pollutants	Potential Emissions	
	PPH	TPY
Formaldehyde	0.12	0.55
Total HAPs	0.18	0.79
Regulated Pollutants other than Criteria and HAP	Potential Emissions	
	PPH	TPY

List the method(s) used to calculate the potential emissions (include dates of any stack tests conducted, versions of software used, source and dates of emission factors, etc.).

NOx, VOC, and CO: Vendor Data (20% of UHC for VOC)
PM2.5/PM10/TSP: AP-42 Table 3.1-2a (4/00)
SO2: 0.20 grains S/100 scf (hourly); 0.25 grains S/100 scf (annually)
HAPs: AP-42 Table 3.1-3 (4/00)

Applicable Requirements

List all applicable requirements for this emission unit. For each applicable requirement, include the underlying rule/regulation citation and/or construction permit with the condition number. (*Note: Title V permit condition numbers alone are not the underlying applicable requirements*). If an emission limit is calculated based on the type of source and design capacity or if a standard is based on a design parameter, this information should also be included.

(1) 40 CFR 60 Subpart KKKK, §60.4305(a) – Subject to this subpart since the turbine has a heat input >= 10 MMBtu/hr.
(2) R13-3315 Condition 5.1.2: Annual emission limits (tpy): NOx – 43.10, CO – 104.84, VOC – 5.52, SO2 – 0.55, PM10 – 5.08, CH2O – 0.55
(3) R13-3315 Condition 5.1.3: Comply with maximum hourly emission limits for each operating parameter.
(4) R13-3315 Condition 5.1.5: NOx limited to 25 ppm at 15% O2 or 150 ng/J of useful output (1.2 lb/MWh). When operating at less than 75% peak load or at temperatures less than 0 °F, the limit for NOx is 150 ppm at 15% O2 or 1,100 ng/J of useful output (8.7 lb/MWh). [40 CFR §60.4320]
(5) R13-3315 Condition 5.1.4: Comply with maximum natural consumption limit of 1,507.73 MMscf/yr.
(6) R13-3315 Condition 5.1.6: SO2 limited to 0.060 lb of SO2/MMBtu heat input. [40 CFR §60.4330(a)(2)]

____ Permit Shield

For all applicable requirements listed above, provide monitoring/testing/recordkeeping/reporting which shall be used to demonstrate compliance. If the method is based on a permit or rule, include the condition number or citation. (Note: Each requirement listed above must have an associated method of demonstrating compliance. If there is not already a required method in place, then a method must be proposed.)

(1) R13-3315 Condition 5.4.1: Submit an initial notification within 15 days after start-up. [40 CFR §60.7(a)(3)]
(2),(3) R13-3315 Conditions 5.3.3: Maintain records of the monthly operating hours for normal, low- load, low-temperature, and startup/shutdown operation. Calculate monthly emissions and keep in a rolling 12-month format.
R13-3315 Condition 5.2.2: Conduct an initial performance test for CO within 180 days of startup. Conduct subsequent testing every 5 years. Submit copy of performance test within 60 days of test completion.
(2),(3) R13-3315 Conditions 5.2.1 and 5.4.2: Conduct an initial performance test for NOx within 60 days after achieving maximum output of the turbine, but no later than 180 days after initial startup. Conduct subsequent performance tests annually. This frequency can be reduced to every two years if the results demonstrate the turbine achieved compliance of <= 75% of the NOx emission limit. Maintain records of performance tests. Submit copy of performance test within 60 days of test completion. [40 CFR §60.8, §60.4340(a), §60.4375(b), §60.4400]
(5) R13-3315 Condition 5.3.1: Maintain records of the amount of natural gas consumed.
(6) R13-3315 Condition 5.3.2: Maintain the fuel quality characteristics in a current, valid purchase contract, tariff sheet or transportation contract specifying that the maximum total sulfur content for natural gas is 20 grains of sulfur or less per 100 scf. [40 CFR §60.4365(a)]

Are you in compliance with all applicable requirements for this emission unit? _X_ Yes ___No

If no, complete the **Schedule of Compliance Form** as **ATTACHMENT F.**

ATTACHMENT E - Emission Unit Form

Emission Unit Description

Emission unit ID number:	**Emission unit name:**	**List any control devices associated with this emission unit:**
T2	Solar Titan 130E Turbine #2	None

Provide a description of the emission unit (type, method of operation, design parameters, etc.):
Natural gas-fired Solar Titan 130E Turbine #1

Manufacturer:	**Model number:**	**Serial number:**
Solar	Titan 130-22402S	
Construction date:	**Installation date:**	**Modification date(s):**
03/25/2019 (In Service)	03/25/2019 (In Service)	N/A

Design Capacity (examples: furnaces - tons/hr, tanks - gallons):
20,912 HP @ 32°F

Maximum Hourly Throughput:	**Maximum Annual Throughput:**	**Maximum Operating Schedule:**
172,115 scf/hr (Based on 32°F)	1,508 MMscf/yr (Based on 32°F)	8,760 hr/yr

Fuel Usage Data **(fill out all applicable fields)**

Does this emission unit combust fuel? ___Yes _X_ No	**If yes, is it?** ___ Indirect Fired ___Direct Fired
Maximum design heat input and/or maximum horsepower rating: Max Heat Input: 175.56 MMBtu/hr (HHV, 32 °F) 20,912 HP @ 32°F	**Type and Btu/hr rating of burners:**

List the primary fuel type(s) and if applicable, the secondary fuel type(s). For each fuel type listed, provide the maximum hourly and annual fuel usage for each.
Natural Gas: 172,115 scf/hr; 1,508 MMscf/yr (Based on 32°F)

Describe each fuel expected to be used during the term of the permit.

Fuel Type	Max. Sulfur Content	Max. Ash Content	BTU Value
Natural Gas	0.25 grains S/100 scf	0	1,020 Btu/scf

Emissions Data		
Criteria Pollutants	Potential Emissions	
	PPH	TPY
Carbon Monoxide (CO)	9.62	104.84
Nitrogen Oxides (NO_X)	9.48	43.10
Lead (Pb)	-	-
Particulate Matter ($PM_{2.5}$)	1.16	5.08
Particulate Matter (PM_{10})	1.16	5.08
Total Particulate Matter (TSP)	1.16	5.08
Sulfur Dioxide (SO_2)	10.02	0.55
Volatile Organic Compounds (VOC)	1.10	5.52
Hazardous Air Pollutants	Potential Emissions	
	PPH	TPY
Formaldehyde	0.12	0.55
Total HAPs	0.18	0.79
Regulated Pollutants other than Criteria and HAP	Potential Emissions	
	PPH	TPY

List the method(s) used to calculate the potential emissions (include dates of any stack tests conducted, versions of software used, source and dates of emission factors, etc.).

NOx, VOC, and CO: Vendor Data (20% of UHC for VOC)
PM2.5/PM10/TSP: AP-42 Table 3.1-2a (4/00)
SO2: 0.20 grains S/100 scf (hourly); 0.25 grains S/100 scf (annually)
HAPs: AP-42 Table 3.1-3 (4/00)

Applicable Requirements

List all applicable requirements for this emission unit. For each applicable requirement, include the underlying rule/regulation citation and/or construction permit with the condition number. (*Note: Title V permit condition numbers alone are not the underlying applicable requirements*). If an emission limit is calculated based on the type of source and design capacity or if a standard is based on a design parameter, this information should also be included.

(1) 40 CFR 60 Subpart KKKK, §60.4305(a) – Subject to this subpart since the turbine has a heat input >= 10 MMBtu/hr.
(2) R13-3315 Condition 5.1.2: Annual emission limits (tpy): NOx – 43.10, CO – 104.84, VOC – 5.52, SO2 – 0.55, PM10 – 5.08, CH2O – 0.55
(3) R13-3315 Condition 5.1.3: Comply with maximum hourly emission limits for each operating parameter.
(4) R13-3315 Condition 5.1.5: NOx limited to 25 ppm at 15% O2 or 150 ng/J of useful output (1.2 lb/MWh). When operating at less than 75% peak load or at temperatures less than 0 °F, the limit for NOx is 150 ppm at 15% O2 or 1,100 ng/J of useful output (8.7 lb/MWh). [40 CFR §60.4320]
(5) R13-3315 Condition 5.1.4: Comply with maximum natural consumption limit of 1,507.73 MMscf/yr.
(6) R13-3315 Condition 5.1.6: SO2 limited to 0.060 lb of SO2/MMBtu heat input. [40 CFR §60.4330(a)(2)]

____ Permit Shield

For all applicable requirements listed above, provide monitoring/testing/recordkeeping/reporting which shall be used to demonstrate compliance. If the method is based on a permit or rule, include the condition number or citation. (Note: Each requirement listed above must have an associated method of demonstrating compliance. If there is not already a required method in place, then a method must be proposed.)

(1) R13-3315 Condition 5.4.1: Submit an initial notification within 15 days after start-up. [40 CFR §60.7(a)(3)]
(2),(3) R13-3315 Conditions 5.3.3: Maintain records of the monthly operating hours for normal, low- load, low-temperature, and startup/shutdown operation. Calculate monthly emissions and keep in a rolling 12-month format.
R13-3315 Condition 5.2.2: Conduct an initial performance test for CO within 180 days of startup. Conduct subsequent testing every 5 years. Submit copy of performance test within 60 days of test completion.
(2),(3) R13-3315 Conditions 5.2.1 and 5.4.2: Conduct an initial performance test for NOx within 60 days after achieving maximum output of the turbine, but no later than 180 days after initial startup. Conduct subsequent performance tests annually. This frequency can be reduced to every two years if the results demonstrate the turbine achieved compliance of <= 75% of the NOx emission limit. Maintain records of performance tests. Submit copy of performance test within 60 days of test completion. [40 CFR §60.8, §60.4340(a), §60.4375(b), §60.4400]
(5) R13-3315 Condition 5.3.1: Maintain records of the amount of natural gas consumed.
(6) R13-3315 Condition 5.3.2: Maintain the fuel quality characteristics in a current, valid purchase contract, tariff sheet or transportation contract specifying that the maximum total sulfur content for natural gas is 20 grains of sulfur or less per 100 scf. [40 CFR §60.4365(a)]

Are you in compliance with all applicable requirements for this emission unit? _X_ Yes ___No

If no, complete the **Schedule of Compliance Form** as **ATTACHMENT F**.

ATTACHMENT E - Emission Unit Form

Emission Unit Description

Emission unit ID number:	**Emission unit name:**	**List any control devices associated with this emission unit:**
G1	Emergency Generator	None

Provide a description of the emission unit (type, method of operation, design parameters, etc.):
Natural gas-fired Waukesha VGF-L36GL Emergency Generator

Manufacturer:	**Model number:**	**Serial number:**
Waukesha	VGF-P48GL	
Construction date:	**Installation date:**	**Modification date(s):**
03/21/2019 (In Service)	03/21/2019 (In Service)	N/A

Design Capacity (examples: furnaces - tons/hr, tanks - gallons):
1,175 HP

Maximum Hourly Throughput:	**Maximum Annual Throughput:**	**Maximum Operating Schedule:**
8,908 scf/hr	4.45 MMscf/yr	500 hr/yr

Fuel Usage Data **(fill out all applicable fields)**

Does this emission unit combust fuel? ___Yes _X_ No	**If yes, is it?** ___ Indirect Fired ___Direct Fired
Maximum design heat input and/or maximum horsepower rating: 9.09 MMBTU/hr 1,175 HP	**Type and Btu/hr rating of burners:**

List the primary fuel type(s) and if applicable, the secondary fuel type(s). For each fuel type listed, provide the maximum hourly and annual fuel usage for each.
Natural Gas: 8,908 scf/hr; 4.45 MMscf/yr

Describe each fuel expected to be used during the term of the permit.

Fuel Type	Max. Sulfur Content	Max. Ash Content	BTU Value
Natural Gas	0.25 grains S/100 scf	0	1,020 Btu/scf

Emissions Data		
Criteria Pollutants	Potential Emissions	
	PPH	TPY
Carbon Monoxide (CO)	4.38	1.09
Nitrogen Oxides (NO_X)	5.18	1.30
Lead (Pb)	-	-
Particulate Matter ($PM_{2.5}$)	0.09	0.02
Particulate Matter (PM_{10})	0.09	0.02
Total Particulate Matter (TSP)	0.09	0.02
Sulfur Dioxide (SO_2)	0.52	1.62E-03
Volatile Organic Compounds (VOC)	0.13	0.03
Hazardous Air Pollutants	Potential Emissions	
	PPH	TPY
Formaldehyde	0.64	0.16
Total HAPs	0.82	0.20
Regulated Pollutants other than Criteria and HAP	Potential Emissions	
	PPH	TPY

List the method(s) used to calculate the potential emissions (include dates of any stack tests conducted, versions of software used, source and dates of emission factors, etc.).

NOx, CO, VOC, and Formaldehyde: Vendor Data (Plus 30% safety factor for CO, VOC, and Formaldehyde. NMNEHC used for VOC)
PM 2.5/PM10/TSP and HAPs: AP-42 Table 3.2-2 (7/00) - 4SLB
SO2: 20 grains S/100 scf (hourly); 0.25 grains S/100 scf (annual)

Applicable Requirements

List all applicable requirements for this emission unit. For each applicable requirement, include the underlying rule/regulation citation and/or construction permit with the condition number. (*Note: Title V permit condition numbers alone are not the underlying applicable requirements*). If an emission limit is calculated based on the type of source and design capacity or if a standard is based on a design parameter, this information should also be included.

(1) Comply with 40 CFR 63 Subpart ZZZZ
(2) R13-3315 Condition 6.1.1: Operating hours limited to 500 hours/year.
(3) R13-3315 Condition 6.2.1: NOx emissions shall not exceed 2.0 g/hp-hr or 160 ppmvd at 15% O2. CO emissions shall not exceed 4.0 g/hp-hr or 540 ppmvd at 15% O2. VOC emissions shall not exceed 1.0 g/hp-hr or 86 ppmvd at 15% O2 (excluding CH2O emissions). [40 CFR §60.4233(e), Table 1]
(4) 40 CFR 60 Subpart JJJJ work practice standards
(5) 40 CFR 60 Subpart JJJJ notification requirements

____ Permit Shield

For all applicable requirements listed above, provide monitoring/testing/recordkeeping/reporting which shall be used to demonstrate compliance. If the method is based on a permit or rule, include the condition number or citation. (Note: Each requirement listed above must have an associated method of demonstrating compliance. If there is not already a required method in place, then a method must be proposed.)

(1) 40 CFR 63 Subpart ZZZZ; §63.6590(c)(1): Comply with NESHAP Subpart ZZZZ by complying with NSPS Subpart JJJJ.
(2) R13-3315 Condition 6.6.1: Maintain records of hours of operation including how many hours are spent for emergency operation, what classified the operation as an emergency, hours spent for non-emergency operation, and reason for non-emergency operation. [40 CFR §60.4245(b)]
(2) R13-3315 Condition 6.3.1: Install a non-resettable hour meter. [40 CFR §60.4237(a)]
(3) R13-3315 Conditions 6.4.1 & 6.6.1: Conduct an initial performance test and subsequent performance tests every 8,760 hours of operation or 3 years, whichever comes first. Submit a copy of the performance test within 60 days after test completion. [40 CFR §60.4243(b), §60.4245(d)]
(4) R13-3315 Condition 6.4.1: Keep a maintenance plan and records of conducted maintenance as well as all notifications submitted. [40 CFR §60.4245(a)]
(5) R13-3315 Condition 6.6.1: Submit an initial notification within 30 days after construction. [40 CFR §60.4245(c)]

Are you in compliance with all applicable requirements for this emission unit? _X_ Yes ___No

If no, complete the **Schedule of Compliance Form** as **ATTACHMENT F**.

ATTACHMENT E - Emission Unit Form

Emission Unit Description

Emission unit ID number:	**Emission unit name:**	**List any control devices associated with this emission unit:**
HTR1	Process Heater #1	None

Provide a description of the emission unit (type, method of operation, design parameters, etc.):
Natural Gas-fired Process Heater #1

Manufacturer:	**Model number:**	**Serial number:**

Construction date:	**Installation date:**	**Modification date(s):**
03/01/2019 (In Service)	03/01/2019 (In Service)	N/A

Design Capacity (examples: furnaces - tons/hr, tanks - gallons):
1.41 MMBTU/hr

Maximum Hourly Throughput:	**Maximum Annual Throughput:**	**Maximum Operating Schedule:**
1,382.4 scf/hr	12.11 MMscf/yr	8,760 hr/yr

Fuel Usage Data **(fill out all applicable fields)**

Does this emission unit combust fuel? _X_ Yes ___ No	**If yes, is it?** _X_ Indirect Fired ___ Direct Fired
Maximum design heat input and/or maximum horsepower rating: Max Heat Input: 1.41 MMBtu/hr	**Type and Btu/hr rating of burners:**

List the primary fuel type(s) and if applicable, the secondary fuel type(s). For each fuel type listed, provide the maximum hourly and annual fuel usage for each.
Natural Gas: 1,382.4 scf/hr; 12.11 MMscf/yr

Describe each fuel expected to be used during the term of the permit.

Fuel Type	Max. Sulfur Content	Max. Ash Content	BTU Value
Natural Gas	0.25 grains S/100 scf	0	1,020 Btu/scf

Emissions Data		
Criteria Pollutants	Potential Emissions	
	PPH	TPY
Carbon Monoxide (CO)	0.12	0.51
Nitrogen Oxides (NO_X)	0.14	0.61
Lead (Pb)	6.91E-07	3.03E-06
Particulate Matter ($PM_{2.5}$)	0.01	0.05
Particulate Matter (PM_{10})	0.01	0.05
Total Particulate Matter (TSP)	0.01	0.05
Sulfur Dioxide (SO_2)	0.08	4.41E-03
Volatile Organic Compounds (VOC)	7.60E-03	0.03
Hazardous Air Pollutants	Potential Emissions	
	PPH	TPY
Formaldehyde	1.04E-04	4.54E-04
Total HAPs	2.61E-03	0.01
Regulated Pollutants other than Criteria and HAP	Potential Emissions	
	PPH	TPY

List the method(s) used to calculate the potential emissions (include dates of any stack tests conducted, versions of software used, source and dates of emission factors, etc.).

NOx and CO: AP-42 Table 1.4-1 (7/98)
PM 2.5/PM10/TSP, Pb, and VOC: AP-42 Table 1.4-2 (7/98)
SO2: 20 grains S/100 scf (hourly); 0.25 grains S/100 scf (annual)
HAPs: AP-42 Table 1.4-3 & 4 (7/98)

Applicable Requirements

List all applicable requirements for this emission unit. For each applicable requirement, include the underlying rule/regulation citation and/or construction permit with the condition number. (*Note: Title V permit condition numbers alone are not the underlying applicable requirements*). If an emission limit is calculated based on the type of source and design capacity or if a standard is based on a design parameter, this information should also be included.

(1) R13-3315 Condition 7.1.2: Smoke and/or particulate matter emitted into the open air must not be greater than 10% opacity based on a six-minute block average. [45CSR§2-3.1]

____ Permit Shield

For all applicable requirements listed above, provide monitoring/testing/recordkeeping/reporting which shall be used to demonstrate compliance. If the method is based on a permit or rule, include the condition number or citation. (Note: Each requirement listed above must have an associated method of demonstrating compliance. If there is not already a required method in place, then a method must be proposed.)

(1) R13-3315 Condition 7.2.1: When requested, conduct Method 9 emission observations. [45CSR§2-3.2]
R13-3315 Conditions 7.4.1: Maintain records of each visible emission check, the general weather conditions, the emission point or equipment ID number, the name or means of ID of the observer, the results of the check, whether the visible emissions are normal for the process, and all corrective measures taken or planned. Report any deviations from the allowable visible emissions requirement.

Are you in compliance with all applicable requirements for this emission unit? _X_ Yes ___ No

If no, complete the **Schedule of Compliance Form** as **ATTACHMENT F.**

ATTACHMENT E - Emission Unit Form

Emission Unit Description

Emission unit ID number:	**Emission unit name:**	**List any control devices associated with this emission unit:**
HTR2	40 Catalytic Heaters	None

Provide a description of the emission unit (type, method of operation, design parameters, etc.):
40 Natural Gas-fired Catalytic Heaters - (40 x 0.072 MMBtu/hr)

Manufacturer:	**Model number:**	**Serial number:**

Construction date:	**Installation date:**	**Modification date(s):**
03/01/2019 (In Service)	03/01/2019 (In Service)	N/A

Design Capacity (examples: furnaces - tons/hr, tanks - gallons):
40 x 0.072 MMBtu/hr

Maximum Hourly Throughput:	**Maximum Annual Throughput:**	**Maximum Operating Schedule:**
2,823.5 scf/hr	24.7 MMscf/yr	8,760 hr/yr

Fuel Usage Data **(fill out all applicable fields)**

Does this emission unit combust fuel? _X_ Yes ___ No	**If yes, is it?** _X_ Indirect Fired ___ Direct Fired
Maximum design heat input and/or maximum horsepower rating: 40 x 0.072 MMBtu/hr	**Type and Btu/hr rating of burners:**

List the primary fuel type(s) and if applicable, the secondary fuel type(s). For each fuel type listed, provide the maximum hourly and annual fuel usage for each.
Natural Gas: 2,823.5 scf/hr; 24.7 MMscf/yr

Describe each fuel expected to be used during the term of the permit.

Fuel Type	Max. Sulfur Content	Max. Ash Content	BTU Value
Natural Gas	0.25 grains S/100 scf	0	1,020 Btu/scf

Emissions Data		
Criteria Pollutants	Potential Emissions	
	PPH	TPY
Carbon Monoxide (CO)	0.24	1.04
Nitrogen Oxides (NO_X)	0.28	1.24
Lead (Pb)	1.41E-06	6.18E-06
Particulate Matter ($PM_{2.5}$)	0.02	0.09
Particulate Matter (PM_{10})	0.02	0.09
Total Particulate Matter (TSP)	0.02	0.09
Sulfur Dioxide (SO_2)	0.16	0.01
Volatile Organic Compounds (VOC)	0.02	0.07
Hazardous Air Pollutants	Potential Emissions	
	PPH	TPY
Formaldehyde	2.12E-04	9.28E-04
Total HAPs	5.33E-03	0.02
Regulated Pollutants other than Criteria and HAP	Potential Emissions	
	PPH	TPY

List the method(s) used to calculate the potential emissions (include dates of any stack tests conducted, versions of software used, source and dates of emission factors, etc.).

NOx and CO: AP-42 Table 1.4-1 (7/98)
PM 2.5/PM10/TSP, Pb, and VOC: AP-42 Table 1.4-2 (7/98)
SO2: 20 grains S/100 scf (hourly); 0.25 grains S/100 scf (annual)
HAPs: AP-42 Table 1.4-3 & 4 (7/98)

Applicable Requirements

List all applicable requirements for this emission unit. For each applicable requirement, include the underlying rule/regulation citation and/or construction permit with the condition number. (*Note: Title V permit condition numbers alone are not the underlying applicable requirements*). If an emission limit is calculated based on the type of source and design capacity or if a standard is based on a design parameter, this information should also be included.

(1) R13-3315 Condition 7.1.2: Smoke and/or particulate matter emitted into the open air must not be greater than 10% opacity based on a six-minute block average. [45CSR§2-3.1]

.

____ Permit Shield

For all applicable requirements listed above, provide monitoring/testing/recordkeeping/reporting which shall be used to demonstrate compliance. If the method is based on a permit or rule, include the condition number or citation. (Note: Each requirement listed above must have an associated method of demonstrating compliance. If there is not already a required method in place, then a method must be proposed.)

(1) R13-3315 Condition 7.2.1: When requested, conduct Method 9 emission observations. [45CSR§2-3.2]
R13-3315 Conditions 7.4.1: Maintain records of each visible emission check, the general weather conditions, the emission point or equipment ID number, the name or means of ID of the observer, the results of the check, whether the visible emissions are normal for the process, and all corrective measures taken or planned. Report any deviations from the allowable visible emissions requirement.

Are you in compliance with all applicable requirements for this emission unit? _X_ Yes ___ No

If no, complete the **Schedule of Compliance Form** as **ATTACHMENT F**.

ATTACHMENT E - Emission Unit Form

Emission Unit Description

Emission unit ID number:	**Emission unit name:**	**List any control devices associated with this emission unit:**
A01	Condensate (Pipeline Fluids) Storage Tank	None

Provide a description of the emission unit (type, method of operation, design parameters, etc.):
2,000 gallon condensate (pipeline fluids) storage tank

Manufacturer:	**Model number:**	**Serial number:**
N/A	N/A	N/A
Construction date:	**Installation date:**	**Modification date(s):**
02/23/2019 (In service)	02/23/2019 (In service)	N/A

Design Capacity (examples: furnaces - tons/hr, tanks - gallons):
2,000 gal

Maximum Hourly Throughput:	**Maximum Annual Throughput:**	**Maximum Operating Schedule:**
	32,724 gal (12 times throughput of first 30 days of operation)	8,760 hr/yr

Fuel Usage Data **(fill out all applicable fields)**

Does this emission unit combust fuel? ___Yes _X_ No	**If yes, is it?** ___ Indirect Fired ___Direct Fired
Maximum design heat input and/or maximum horsepower rating:	**Type and Btu/hr rating of burners:**

List the primary fuel type(s) and if applicable, the secondary fuel type(s). For each fuel type listed, provide the maximum hourly and annual fuel usage for each.

Describe each fuel expected to be used during the term of the permit.

Fuel Type	Max. Sulfur Content	Max. Ash Content	BTU Value

Emissions Data		
Criteria Pollutants	Potential Emissions	
	PPH	TPY
Carbon Monoxide (CO)	-	-
Nitrogen Oxides (NO_X)	-	-
Lead (Pb)	-	-
Particulate Matter ($PM_{2.5}$)	-	-
Particulate Matter (PM_{10})	-	-
Total Particulate Matter (TSP)	-	-
Sulfur Dioxide (SO_2)	-	-
Volatile Organic Compounds (VOC)	0.06	0.28
Hazardous Air Pollutants	Potential Emissions	
	PPH	TPY
Regulated Pollutants other than Criteria and HAP	Potential Emissions	
	PPH	TPY

List the method(s) used to calculate the potential emissions (include dates of any stack tests conducted, versions of software used, source and dates of emission factors, etc.).

AP-42 Chapter 7.1 equations

Applicable Requirements

List all applicable requirements for this emission unit. For each applicable requirement, include the underlying rule/regulation citation and/or construction permit with the condition number. (*Note: Title V permit condition numbers alone are not the underlying applicable requirements*). If an emission limit is calculated based on the type of source and design capacity or if a standard is based on a design parameter, this information should also be included.

(1) 40 CFR 63.5410a(h)

____ Permit Shield

For all applicable requirements listed above, provide monitoring/testing/recordkeeping/reporting which shall be used to demonstrate compliance. If the method is based on a permit or rule, include the condition number or citation. (Note: Each requirement listed above must have an associated method of demonstrating compliance. If there is not already a required method in place, then a method must be proposed.)

(1) 40 CFR 63.5410a(h) – Submit condensate production data for first 30 days in service and calculate potential VOC emissions.

Are you in compliance with all applicable requirements for this emission unit? _X_ Yes ___No

If no, complete the **Schedule of Compliance Form** as **ATTACHMENT F.**

Supplemental Attachment:

Supporting Emissions Calculations

Columbia Gas Transmission, LLC
White Oak Compressor Station
Title V Application

Table 1 - Facility Total PTE

Source	Capacity	Annual Emissions (tpy)						
		NO_x	CO	$PM_{10}/PM_{2.5}$	VOC	SO_2	CH_2O	Total HAP
T01 - Solar Titan 130E Turbine #1	20,912 hp (32 °F)	43.10	104.84	5.08	5.52	0.55	0.55	0.79
T02 - Solar Titan 130E Turbine #2	20,912 hp (32 °F)	43.10	104.84	5.08	5.52	0.55	0.55	0.79
G1 - Waukesha Emergency Generator	1,175 hp	1.30	1.09	0.02	0.03	1.62E-03	0.16	0.20
H1 - Process Heater	1.41 MMBtu/hr	0.61	0.51	0.05	0.03	4.41E-03	4.54E-04	0.01
SH1 - (40) Catalytic Heaters	Various	1.24	1.04	0.09	0.07	9.01E-03	9.28E-04	0.02
A01 - Pipeline Liquids Tank	2,000 gal				0.28			
Pigging					0.10			
Equipment Leaks (fugitive emissions)[1]					0.15			0.01
Venting (except blowdowns)					0.40			0.02
Blowdowns					6.12			0.36
Facility PTE[2]		89.34	212.31	10.31	18.07	1.11	1.25	2.21
Title V Threshold		100	100	100	100	100	10	25
PSD Major Source Threshold		250	250	250	250	250	n/a	n/a
Applicability		None, Natural Minor	Title V	None, Natural Minor	None, Natural Minor	None, Natural Minor	None, Area Source	None, Area Source

1. Fugitive emissions are not part of the PSD or Title V applicability analyses.
2. Excludes fugitive emissions (compressor stations are not one of the named source categories that include fugitive emissions).

Columbia Gas Transmission, LLC
White Oak Compressor Station
Title V Application

Table 2 - Solar Titan 130E Turbines (T01 & T02)

Horsepower	20,912	hp (32 °F)
Brake Specific Fuel Consumption	7,563	Btu/bhp-hr (LHV, 32 °F)
Total Heat Input	158.16	MMBtu/hr (LHV, 32 °F)
	175.56	MMBtu/hr (HHV, 32 °F)[3]
Operating Hours	8,760	hr/yr
Natural Gas Heat Content	1,020	Btu/scf
Fuel Consumption	1,507.73	MMscf/yr
	172,115.3	scf/hr (based on 32 °F)
Quantity	2	

Pollutant	Emission Factor			Emission Rate			Emission Factor Reference
	ppmvd@15%O_2	lb/MMBtu		lb/hr[1]	ton/yr[2]	ton/yr (2 turbines)	
NO_x	15.00	0.060	LHV	9.48	43.10	86.20	Vendor Data
CO	25.00	0.061	LHV	9.62	104.84	209.67	Vendor Data
PM_{10}		0.0066	HHV	1.16	5.08	10.15	AP-42 Table 3.1-2a (4/00)
$PM_{2.5}$		0.0066	HHV	1.16	5.08	10.15	AP-42 Table 3.1-2a (4/00)
VOC	5.00	0.007	LHV	1.10	5.52	11.04	Vendor Data (20% of UHC)[4]
SO_2 (Maximum Hourly)		0.0571	HHV	10.02			20 grains S / 100 scf
SO_2 (Average Annual)		0.000714	HHV		0.55	1.10	0.25 grains S / 100 scf
Formaldehyde		0.00071	HHV	0.12	0.55	1.09	AP-42 Table 3.1-3 (4/00)
Total HAPs		0.00103	HHV	0.18	0.79	1.58	AP-42 Table 3.1-3 (4/00)

1. Maximum hourly emission rate based on normal operation at 32 °F. Heat input, fuel consumption, and emissions increase as temperature decreases, and for the purpose of this application, hourly emissions are characterized by Solar emissions data for 32 °F.
2. Annual emission rate based on maximum of: (1) normal operation or (2) normal operation plus non-SoLoNOx operation.
3. HHV heat input based on HHV=1.11*LHV
4. VOC based on 20% of vendor data for unburned hydrocarbon.

Columbia Gas Transmission, LLC
White Oak Compressor Station
Title V Application

Table 3 - Solar Titan 130E (T01 & T02) - Normal and Non-SoLoNOx Emission Rates

Normal and Non-SoLoNOx Emission Rates

Operating Mode	Units	NO_x	CO	VOC
Normal Load @ 32 °F[1]	lb/hr	9.48	9.62	1.10
Normal Load @ 32 °F[2]	tpy	41.52	42.14	4.83
Non-SoLoNOx Operation[3]	tpy	1.58	62.70	0.70
Total Emissions per Turbine	tpy	43.10	104.84	5.52

1. Based on data from Solar Titan 130E Compressor Set data sheet and the following concentrations: 15 ppm NO_x; 25 ppm CO; 5 ppm VOC
2. Based on 8760 hr/yr of normal operation.
3. Potential emissions in excess of 8760 hr/yr at normal operation that may occur when turbine operates in non-SoLoNOx mode such as during low ambient temperatures (<0 °F), low load (< 50%), and during startup and shutdown events. This annual total represents the difference between the aggregate total with non-SoLoNOx operation and 8760 hr/yr of normal operation.

Columbia Gas Transmission, LLC
White Oak Compressor Station
Title V Application

Table 4 - Emissions from Venting, Blowdowns & Equipment Leaks (Fugitives)

Component	Emission Rate (ton/yr)		
	CH_4 [1]	VOC [2]	HAPs [3]
Venting (except blowdowns)	26.10	0.40	0.02
Blowdowns	399.45	6.12	0.36
Equipment Leaks (Fugitives)	9.62	0.15	0.01

1. CH_4 emission rate based on 86.90 vol% CH_4 in natural gas
2. Based on a 0.0153 ratio of VOC to methane as calculated from gas composition
3. Based on a 0.0009 ratio of HAPs to methane as calculated from gas composition

Columbia Gas Transmission, LLC
White Oak Compressor Station
Title V Application

Table 5 - Waukesha VGF-P48GL Emergency Generator (G1)

Horsepower	1,175	hp
Brake Specific Fuel Consumption	7,733	Btu/Bhp-hr
Total Heat Input	9.09	MMBtu/hr
Operating Hours	500	hr/yr
Natural Gas Heat Content	1,020	Btu/scf
Fuel Consumption	4.45	MMscf/yr
	8,908	scf/hr

Pollutant	Emission Factor		Emission Rate		Emission Factor Reference
	g/bhp-hr	lb/MMBtu	lb/hr	ton/yr	
NO_x	2.00		5.18	1.30	Vendor Data
CO	1.69		4.38	1.09	Vendor Data[1]
PM_{10}		0.010	0.09	0.02	AP-42 Table 3.2-2 (7/00) - 4SLB
$PM_{2.5}$		0.010	0.09	0.02	AP-42 Table 3.2-2 (7/00) - 4SLB
VOC	0.05		0.13	0.03	Vendor Data (NMNEHC)[1]
SO_2 (Maximum Hourly)		0.0571	0.52		20 grains S / 100 scf
SO_2 (Average Annual)		0.000714		1.62E-03	0.25 grains S / 100 scf
Formaldehyde	0.25		0.64	0.16	Vendor Data[1]
Total HAPs		0.08981	0.82	0.20	AP-42 Table 3.2-2 (7/00) - 4SLB

1. Based on vendor data plus 30% safety factor
2. Emissions based on reference provided assuming operation at maximum capacity for 500 hours per year.

Columbia Gas Transmission, LLC
White Oak Compressor Station
Title V Application

Table 6 - Process Heater (H1)

Heat Input	1.41	MMBtu/hr
Operating Hours	8760	hr/yr
Natural Gas Heat Content	1020	Btu/scf
Fuel Consumption	12.11	MMscf/yr
	1382.4	scf/hr

Pollutant	Emission Factor		Emission Rate		Emission Factor Reference
	lb/MMscf	lb/MMBtu	lb/hr	ton/yr	
NO_x	100	0.098	0.14	0.61	AP-42 Table 1.4-1 (7/98)
CO	84	0.082	0.12	0.51	AP-42 Table 1.4-1 (7/98)
PM_{10}	7.6	0.007	0.01	0.05	AP-42 Table 1.4-2 (7/98)
$PM_{2.5}$	7.6	0.007	0.01	0.05	AP-42 Table 1.4-2 (7/98)
VOC	5.5	0.005	0.01	0.03	AP-42 Table 1.4-2 (7/98)
SO_2 (Maximum Hourly)		0.0571	0.08		20 grains S / 100 scf
SO_2 (Average Annual)		0.000714		4.41E-03	0.25 grains S / 100 scf
Formaldehyde	0.075	0.00007	1.04E-04	4.54E-04	AP-42 Table 1.4-3 (7/98)
Total HAPs	1.89	0.00185	2.61E-03	0.01	AP-42 Table 1.4-3 & 4 (7/98)

1. Emissions based on reference provided assuming operation at maximum capacity for 8,760 hours per year.

Columbia Gas Transmission, LLC
White Oak Compressor Station
Title V Application

Table 7 - Catalytic Heaters (SH1)

Heat Input	0.072	MMBtu/hr
Quantity	40	
Total Heat Input	2.88	MMBtu/hr
Operating Hours	8760	hr/yr
Natural Gas Heat Content	1020	Btu/scf
Fuel Consumption	24.73	MMscf/yr
	2,823.5	scf/hr

Pollutant	Emission Factor		Emission Rate (40 heaters)		Emission Factor Reference
	lb/MMscf	lb/MMBtu	lb/hr	ton/yr	
NO_x	100	0.098	0.28	1.24	AP-42 Table 1.4-1 (7/98)
CO	84	0.082	0.24	1.04	AP-42 Table 1.4-1 (7/98)
PM_{10}	7.6	0.007	0.02	0.09	AP-42 Table 1.4-2 (7/98)
$PM_{2.5}$	7.6	0.007	0.02	0.09	AP-42 Table 1.4-2 (7/98)
VOC	5.5	0.005	0.02	0.07	AP-42 Table 1.4-2 (7/98)
SO_2 (Maximum Hourly)		0.0571	0.16		20 grains S / 100 scf
SO_2 (Average Annual)		0.000714		9.01E-03	0.25 grains S / 100 scf
Formaldehyde	0.075	0.00007	2.12E-04	9.28E-04	AP-42 Table 1.4-3 (7/98)
Total HAPs	1.89	0.00185	5.33E-03	0.02	AP-42 Table 1.4-3 & 4 (7/98)

1. Emissions based on reference provided assuming operation at maximum capacity for 8,760 hours per year.

Columbia Gas Transmission, LLC
White Oak Compressor Station
Title V Application

Table 8 - Storage Tank Emissions

Source	VOC Emissions		
	lb/month*	lb/yr	tpy
Tank A01	46.5	558	0.28

*lb/month emissions based on maximum throughput during startup month as calculated using Tank 4.0.9d

Columbia Gas Transmission, LLC
White Oak Compressor Station
Title V Application

Table 9 - Pigging

Facility	Volume	Emissions		
		CH_4		VOC[1]
	Mcf	scf/year	ton/year	ton/year
36" Launcher/Receiver Barrel	29.37	153,135	3.24	0.05
36" Launcher/Receiver Barrel	29.37	153,135	3.24	0.05
Total:			6.48	0.10
			Maximum lb/day [2]:	16.54

Gas Composition:	86.9000%	CH_4
Frequency	6	event/year/barrel (maximum year)
Density from 40 CFR 98.233(v)	0.0192	kg/scf CH_4
Conversion Factor	2.20462	lb/kg
	2000	lb/ton
	1000	cf/Mcf
Ratio of VOC to CH4	0.015311	(by mass)

1. Estimated maximum annual emissions from pigging.
2. Maximum daily emissions based on pigging using both lines on same day.

Supplemental Attachment:

Executive Summary

Executive Summary

Columbia Gas Transmission, LLC's White Oak Compressor Station, located in Calhoun County, West Virginia is a typical natural gas compressor station which was issued Permit to Construct R13-3315 on November 14, 2016.

Natural gas is received from upstream compressor stations via pipelines and compressed using two (2) Solar turbine-driven compressors for transmission to a downstream station. Auxiliary equipment permitted at the station includes one (1) natural gas-fired emergency generator, one (1) process heater, forty (40) catalytic heaters, and numerous insignificant storage tanks including one condensate storage tank.

Per 45CFR30-4.1.a.2, a Title V application for the Station is due within 12 months after the date of commencement of operation authorized by the permit to construct. The in-service dates for the emission units at the Station are as follows:

Emission Unit ID	Unit Description	In Service Date
T1	Solar Titan 130E Turbine #1	3/3/2019
T2	Solar Titan 130E Turbine #2	3/25/2019
HTR1	Process Heater	3/1/2019
HTR2	Comfort Heaters	3/1/2019
G1	Emergency Generator #1	3/21/2019
A1	Condensate Storage Tank	2/23/2019

As described in the R13 permit application for the Station, the following federal regulations are applicable to these emission units:

- 40 CFR 60 Subpart JJJJ (Standards of Performance for Stationary Spark Ignition Internal Combustion Engines) applies to G1.
- 40 CFR 60 Subpart KKKK (Standards of Performance for Stationary Combustion Turbines) applies to T01 and T02.
- 40 CFR 60 Subpart OOOOa (Standards of Performance for Crude Oil and Natural Gas Facilities for Which Construction, Modification or Reconstruction Commenced After September 18, 2015). This regulation is not applicable to A1 because potential emissions from A1 do not exceed 6 tons per year.
- 40 CFR 63 Subpart ZZZZ (National Emission Standards for Hazardous Air Pollutants for Stationary Reciprocating Internal Combustion Engines) applies to G1. G1 complies with this regulation by complying with 40 CFR 60 Subpart JJJJ.

- Please note the changes since the R13 application was issued:
- There is a 24000 btu Bruest infrared catalytic heater which is an insignificant emissions source at the site.
- The condensate tank A1 is 2056 gallons instead of 2000.