April 18, 2017

RECEIVED
APR 18 2017
WV DEP / DIV OF AIR QUALITY

Mr. William F. Durham
Director
WVDEP, Division of Air Quality
601 – 57th Street SE
Charleston, West Virginia 25304

Re: Columbia Gas Transmission, LLC (CGT), Title V Renewal Application, R30-10300010-2017

Dear Mr. Durham,

Columbia Gas Transmission, LLC (CGT) and SLR International Corporation have prepared the attached 45CSR30 Title V Renewal Application for the Smithfield Compressor Station located in Wetzel County, West Virginia (Facility ID 103-00010). The facility is currently operating under Title V operating permit number R30-10300010-2017.

In preparation for this renewal the existing terms and conditions of the Title V permit were reviewed and evaluated. As a result of this evaluation, suggested Title V permit language has been developed that moves away from the old natural gas General Permit format. This is in an effort to enhance compliance clarity and bring the permit up to EPA's current expectations. These suggested changes to permit content and format have been compiled within a proposed permit document submitted for consideration within this application. The proposed permit has also been supplied in Microsoft Word format within the electronic submittal in hopes of being a useful tool for the reviewing Engineer's convenience.

SLR would be more than happy to discuss the details of the proposed permit language or the Title V Renewal Application at your convenience. If any additional information is needed, please feel free to contact me by telephone at (304) 545-8563 or by e-mail at jhanshaw@slrconsulting.com

Sincerely,
SLR International Corporation

Jesse Hanshaw

Jesse Hanshaw
Principal Engineer

Cc: Mr. Mitch Lagerstrom, CGT Air Compliance Manager

global environmental solutions

Columbia Gas Transmission, LLC

Smithfield Compressor Station

Facility ID No. 103-00010

Smithfield, West Virginia

Title V Operating Permit Renewal Application

SLR Ref: 116.01272.00036

April 2017

Columbia Gas Transmission

Title V Operating Permit Renewal Application

Prepared for:

Columbia Gas Transmission, LLC
1700 MacCorkle Avenue, SE
Charleston, West Virginia 25314

This document has been prepared by SLR International Corporation. The material and data in this permit application were prepared under the supervision and direction of the undersigned.

Chris Boggess
Associate Engineer

Jesse Hanshaw, P.E.
Principal Engineer

CONTENTS

ATTACHMENTS

APPLICATION FOR PERMIT
ATTACHMENT A ..... AREA MAP
ATTACHMENT B ..... PLOT PLAN
ATTACHMENT C ..... PROCESS FLOW DIAGRAM
ATTACHMENT D ..... EQUIPMENT TABLE
ATTACHMENT E ..... EMISSION UNIT FORM(S)
ATTACHMENT F ..... SCHEDULE OF COMPLIANCE FORM (SEE NOTE)
ATTACHMENT G ..... AIR POLLUTION CONTROL DEVICE FORM (SEE NOTE)
ATTACHMENT H .... COMPLIANCE ASSURANCE MONITORING FORM (SEE NOTE)

APPENDIX A SUPPORTING CALCULATIONS
APPENDIX B PROPOSED PERMIT LANGUAGE
APPENDIX C ELECTRONIC SUBMITTAL

Notes:
ATTACHMENT F – N/A – Source is in compliance with all facility wide requirements
ATTACHMENT G – N/A – No control devices utilized at the facility
ATTACHMENT H – N/A – No CAM plan requirements at the facility

APPLICATION FOR PERMIT

Title V Operating Permit Renewal Application

Smithfield Compressor Station, Facility ID No. 103-00010
Smithfield, West Virginia

Columbia Gas Transmission, LLC
1700 MacCorkle Avenue, SE
Charleston, West Virginia

April 2017

WEST VIRGINIA DEPARTMENT OF ENVIRONMENTAL PROTECTION
DIVISION OF AIR QUALITY

601 57th Street SE
Charleston, WV 25304
Phone: (304) 926-0475
www.dep.wv.gov/daq

INITIAL/RENEWAL TITLE V PERMIT APPLICATION - GENERAL FORMS

Section 1: General Information

1. **Name of Applicant (As registered with the WV Secretary of State's Office):** Columbia Gas Transmission, LLC	**2. Facility Name or Location:** Smithfield Compressor Station
3. DAQ Plant ID No.: 103-00010	**4. Federal Employer ID No. (FEIN):** 31-0802435-30

5. **Permit Application Type:**

☐ Initial Permit — When did operations commence? 1963
☒ Permit Renewal — What is the expiration date of the existing permit? 10/31/2017
☐ Update to Initial/Renewal Permit Application

6. Type of Business Entity:

☐ Corporation ☐ Governmental Agency ☒ LLC
☐ Partnership ☐ Limited Partnership

7. Is the Applicant the:

☐ Owner ☐ Operator ☒ Both

If the Applicant is not both the owner and operator, please provide the name and address of the other party.

_____
_____
_____

8. Number of onsite employees:

Less than ten (10) employees

9. Governmental Code:

☒ Privately owned and operated; 0
☐ Federally owned and operated; 1
☐ State government owned and operated; 2
☐ County government owned and operated; 3
☐ Municipality government owned and operated; 4
☐ District government owned and operated; 5

10. Business Confidentiality Claims

Does this application include confidential information (per 45CSR31)? ☐ Yes ☒ No

If yes, identify each segment of information on each page that is submitted as confidential, and provide justification for each segment claimed confidential, including the criteria under 45CSR§31-4.1, and in accordance with the DAQ's *"PRECAUTIONARY NOTICE-CLAIMS OF CONFIDENTIALITY"* guidance.

11. Mailing Address		
Street or P.O. Box: 5151 San Felipe St., Suite 2400		
City: Houston	**State:** TX	**Zip:** 77056
Telephone Number: (713) 386 3701	**Fax Number:**	

12. Facility Location		
Street: State Route 20	**City:** Smithfield	**County:** Wetzel
UTM Easting: 537.705 km	**UTM Northing:** 4,370.215 km	**Zone:** ☒ 17 or ☐ 18
Directions: Traveling North on U.S. Route 19 from Clarksburg to the intersection with State Route 20 turn left ton SR 20. Proceed West on SR 20 for approximately 1.8 miles past the town of Folsom to the station which is on the left side of the road and visible.		
Portable Source? ☐ Yes ☒ No		
Is facility located within a nonattainment area? ☐ Yes ☒ No		**If yes, for what air pollutants?**
Is facility located within 50 miles of another state? ☒ Yes ☐ No		**If yes, name the affected state(s).** Ohio Pennsylvania
Is facility located within 100 km of a Class I Area[1]? ☐ Yes ☒ No **If no, do emissions impact a Class I Area[1]?** ☐ Yes ☒ No		**If yes, name the area(s).**

[1] *Class I areas include Dolly Sods and Otter Creek Wilderness Areas in West Virginia, and Shenandoah National Park and James River Face Wilderness Area in Virginia.*

13. Contact Information		
Responsible Official: Eugene Wood		**Title:** Manager Of Operations
Street or P.O. Box: 455 Racetrack Rd		
City: Washington	**State:** PA	**Zip:** 15301
Telephone Number: (724) 223 2797	**Fax Number:** (304) 357-2770	
E-mail address: Eugene_wood@transcanada.com		
Environmental Contact: Lacey Ivey		**Title:** Principal Air
Street or P.O. Box: 201 Energy Parkway, Suite 100		
City: Lafayette	**State:** LA	**City:** Lafayette
Telephone Number: (337) 241-6086	**Fax Number:**	
E-mail address: lacey_ivey@transcanada.com		
Application Preparer: Jesse Hanshaw		**Title:** Principal Engineer
Company: SLR International Corporation		
Street or P.O. Box: 8 Capitol St., Suite 300		
City: Charleston	**State:** WV	**Zip:** 25301
Telephone Number: (681) 205-8949	**Fax Number:** (681) 205-8969	
E-mail address: jhanshaw@slrconsulting.com		

14. Facility Description

List all processes, products, NAICS and SIC codes for normal operation, in order of priority. Also list any process, products, NAICS and SIC codes associated with any alternative operating scenarios if different from those listed for normal operation.

Process	Products	NAICS	SIC
Natural Gas Transmission	Natural Gas	486210	4922

Provide a general description of operations.

Smithfield Compressor Station is a natural gas transmission facility covered by Standard Industrial Classification (SIC) Code 4922. The station has the potential to operate twenty-four (24) hours per day, seven (7) days per week, fifty-two (52) weeks per year. The station consists of two (2) 1,500 hp, Ingersoll-Rand 410 KVGB, 4SLB reciprocating engines, (1) 6,736 hp Solar Taurus 60-7302S turbine engine, one (1) 4,213 hp Solar Centaur 40 turbine engine, one (1) 440 hp Waukesha VGF-F18GL, 4SLB reciprocating engine/generator, one (1) 2.284 mmBtu/hr American Standard, model # 1 BN-J-3, heating system boiler, one (1) 0.25 mmBtu/hr BS&B, model # J-92-02, line heater, one (1) 0.50 mmBtu/hr Total Energy Resouces Inc, model # FAH-18-6, line heater, and one (1) 0.30 mmBtu/hr line heater.

15. Provide an **Area Map** showing plant location as **ATTACHMENT A**.

16. Provide a **Plot Plan(s)**, e.g. scaled map(s) and/or sketch(es) showing the location of the property on which the stationary source(s) is located as **ATTACHMENT B**. For instructions, refer to "Plot Plan - Guidelines."

17. Provide a detailed **Process Flow Diagram(s)** showing each process or emissions unit as **ATTACHMENT C**. Process Flow Diagrams should show all emission units, control equipment, emission points, and their relationships.

Section 2: Applicable Requirements

18. Applicable Requirements Summary	
Instructions: Mark all applicable requirements.	
☒ SIP	☐ FIP
☒ Minor source NSR (45CSR13)	☐ PSD (45CSR14)
☒ NESHAP (45CSR34)	☐ Nonattainment NSR (45CSR19)
☐ Section 111 NSPS	☐ Section 112(d) MACT standards
☐ Section 112(g) Case-by-case MACT	☐ 112(r) RMP
☐ Section 112(i) Early reduction of HAP	☐ Consumer/commercial prod. reqts., section 183(e)
☐ Section 129 Standards/Reqts.	☐ Stratospheric ozone (Title VI)
☐ Tank vessel reqt., section 183(f)	☐ Emissions cap 45CSR§30-2.6.1
☐ NAAQS, increments or visibility (temp. sources)	☐ 45CSR27 State enforceable only rule
☒ 45CSR4 State enforceable only rule	☐ Acid Rain (Title IV, 45CSR33)
☐ Emissions Trading and Banking (45CSR28)	☐ **C**ompliance **A**ssurance **M**onitoring (40CFR64)
☐ CAIR NO_x Annual Trading Program (45CSR39)	☐ CAIR NO_x Ozone Season Trading Program (45CSR40)
☐ CAIR SO_2 Trading Program (45CSR41)	

19. Non Applicability Determinations

List all requirements which the source has determined not applicable and for which a permit shield is requested. The listing shall also include the rule citation and the reason why the shield applies.

45CSR4 – *To Prevent and Control the Discharge of Air Pollutants into the Open Air Which Causes or Contributes to an Objectionable Odor or Odors:* According to 45CSR§4-7.1, this rule shall not apply to the following sources of objectionable odor until such time as feasible control methods are developed: Internal Combustion Engines

45CSR10 – *To Prevent and Control Air Pollution from the Emission of Sulfur Oxides:* 45CSR10 is not applicable to the facility's heaters because maximum design heat input (DHI) is less than 10 MMBtu/hr

45CSR21 – *To Prevent and Control Air Pollution from the Emission of Volatile Organic Compounds:* All storage tanks at the station, which are listed as insignificant sources, are below 40,000 gallons in capacity which exempts the facility from 45CSR§21-28. The compressor station is not engaged in the extraction or fractionation of natural gas which exempts the facility from 45CSR§21-29. Additionally this site is not located within one of the five designated VOC maintenance counties (Cabell, Kanawha, Putnam, Wayne & Wood)

45CSR27 – *To Prevent and Control the Emissions of Toxic Air Pollutants:* Natural gas is included as a petroleum product and contains less than 5% benzene by weight. 45CSR§27-2.4 exempts equipment "used in the production and distribution of petroleum products providing that such equipment does not produce or contact materials containing more than 5% benzene by weight."

☒ Permit Shield

19. Non Applicability Determinations *(Continued)* - *Attach additional pages as necessary.*

List all requirements which the source has determined not applicable and for which a permit shield is requested. The listing shall also include the rule citation and the reason why the shield applies.

40 CFR 60 Subpart Dc – *Standards of Performance for Steam Generating Units:* The line heaters and boiler at this facility are less than 10 mmBtu/hr; Hence Subpart Dc is not applicable in accordance with 60.40c(a)

40 CFR 60 Subparts K,Ka – *Standards of Performance for Storage Vessels for Petroleum Liquids:* All tanks at the facility are below 40,000 gallons in capacity as specified in 60.110a(a)

40 CFR 60 Subpart Kb – *Standards of Performance for Volatile Organic Liquid* Storage *Vessels:* All tanks at the facility are below 75m^3 (19,813 gallons) in capacity as specified in 60.110b(a)

40 CFR 60 Subpart KKK – *Standards of Performance for Equipment Leaks of VOC From Onshore Natural Gas Processing Plant:* This compressor station is not engaged in the extraction or fractionation of natural gas liquids from field gas, the fractionation of mixed natural gas liquids to natural gas products, or both.

40 CFR 60 Subpart IIII – *Standards of Performance for Stationary Compression Ignition Internal Combustion Engines*: There are no compression ignition engines at this facility.

40 CFR 60 Subpart OOOO – *Standards of Performance for Crude Oil and Natural Gas Production, Transmission and Distribution*: The Storage Vessel requirements defined for transmission sources is not applicable to this site because all vessels commenced construction, prior to August 23, 2011 as stated in accordance with [40CFR§60.5365(e)]. No other affected sources were identified at this site.

40 CFR 60 Subpart OOOOa – *Standards of Performance for Crude Oil and Natural Gas Facilities for which Construction, Modification, or Reconstruction Commenced after September 18, 2015*. The GHG and VOC requirements defined by this NSPS are not applicable to this site because all affected sources commenced constructed prior to September 18, 2015 in accordance with [40CFR§60.5365a]

40 CFR 63 Subpart HHH – *National Emission Standards for Hazardous Air Pollutants from Natural gas Transmission and Storage Facilities:* This facility does not have a glycol dehydration unit and is not a major source of HAPs therefore it is not subject to the requirements of this subpart.

40 C.F.R. 63 Subpart DDDDD; *National Emission Standards for Hazardous Air Pollutants for Industrial, Commercial, and Institutional Boilers and Process Heaters:* This subpart does not apply to the facility since it not a major source of HAPs as defined in 40CFR§63.7575.

40 C.F.R. 63 Subpart JJJJJJ; *National Emission Standards for Hazardous Air Pollutants for Industrial, Commercial, and Institutional Boilers Area Sources:* This subpart does not apply to the facility since the line heaters and heating system boiler are fueled by natural gas as defined in 40CFR§63.11195(e).

40 CFR 64 – *Compliance Assurance Monitoring (CAM):* There are no add-on controls at this facility; therefore, in accordance with 40CFR§64.2(b)(1), CAM is not applicable to this facility.

☒ Permit Shield

20. Facility-Wide Applicable Requirements

List all facility-wide applicable requirements. For each applicable requirement, include the underlying rule/regulation citation and/or construction permit with the condition number. (*Note: Title V permit condition numbers alone are not the underlying applicable requirements*).

T5 – 3.1.1 – 45 CSR 6-3.1 – Open burning prohibited
T5 – 3.1.2 – 45 CSR 6-3.2 – Open burning exemption stipulations
T5 – 3.1.3 – 40 CFR Part 61 and 45 CSR 34 – Asbestos inspection and removal
T5 – 3.1.4 – 45 CSR 4 – No objectionable odors
T5 – 3.1.5 – 45 CSR 11-5.2 – Standby plans for emergency episodes
T5 – 3.1.6 – WV Code 22-5-4 (a) (14) – Annual emission inventory reporting
T5 – 3.1.7 – 40 CFR Part 82 Subpart F – Ozone depleting substances
T5 – 3.1.8 – 40 CFR Part 68 – Risk Management Plan
T5 – 3.1.9 – 45 CSR 30-12.7 – Odor Control for Mercaptan
T5 – 3.1.10 – 45 CSR 30-12.7 – Emergency Operating Conditions / unit replacement
T5 – 3.3.1 – 45 CSR 22-5-4(a)(14-15) & 45CSR13 - Stack Testing - Conduct stack testing as required
T5 – 3.4.1 – 45 CSR 30-5.1 - Monitoring information – general monitoring requirements
T5 – 3.4.2 – 45 CSR 30-5.1 - Retention of records - Maintain records for a period of 5 years
T5 – 3.4.3 – 45 CSR 30-5.1 - Odors - Maintain records of odor complaints and corrective actions
T5 – 3.4.4 – 45 CSR 17.3 – Fugitive PM shall not cause statutory Air Pollution
T5 – 3.5.1 – 45 CSR 30-4.4. and 5.1.c.3.D – All documents required by permit shall be certified by a Responsible Official
T5 – 3.5.2 – 45 CSR 30-5.1.c.3.E. - A permittee may request confidential treatment
T5 – 3.5.3 – 45 CSR 30-5 - Communication required or permitted to be made to the DEP and/or USEPA
T5 – 3.5.4 – 45 CSR 30-8 - Certified emissions statement – Operator will Submit a certified emissions statement and pay fees on an annual basis
T5 – 3.5.5 – 45 CSR 30-5.3.e. - Compliance certification. The permittee shall certify compliance with the conditions of this permit on the forms provided by the DAQ
T5 – 3.5.6 – 45 SR§30-5.1.c.3.A - Semi-annual monitoring reports.
T5 – 3.5.7 – 45 CSR 30-5.7.a through e. - Emergencies
T5 – 3.5.8 – 45 CSR 30-5.1.c.3.B. and C. - Deviations
T5 – 3.5.9 – 45 CSR 30-4.3.h.1.B. New applicable requirements. If any requirement is promulgated, the permittee will meet such requirements on a timely basis
T5 – 3.5.10 – 45 CSR 30-5.1.c.3.C. Natural Gas Use certification during Compliance Certification

☒ Permit Shield

For all facility-wide applicable requirements listed above, provide monitoring/testing / recordkeeping / reporting which shall be used to demonstrate compliance. If the method is based on a permit or rule, include the condition number and/or citation. (Note: Each requirement listed above must have an associated method of demonstrating compliance. If there is not already a required method in place, then a method must be proposed.)

T5 – 3.1.3 – 40 CFR Part 61 and 45 CSR 34 – Prior to demolition/construction buildings will be inspected for asbestos and documented accordingly
T5 – 3.1.4 – 45 CSR 4 – Permittee shall maintain records of all odor complaints received
T5 – 3.1.5 – 45 CSR 11 – Upon request by the Secretary, the permittee shall prepare a standby plan
T5 – 3.1.6 – WV 22-5-4 – The permittee shall submit annual emission inventory reports
T5 – 3.1.7 – 40 CFR Part 82 Subpart F – The permittee will prohibit maintenance, service, or repair of appliances containing ozone depleting substances without persons certified pursuant to 40 CFR 82.161
T5 – 3.1.8 – 40 CFR Part 68 – Should the permittee become subject to 40 CFR Part 68, a RMP shall be submitted
T5 – 3.1.10 – 45CSR§30-12.7 For emergency situations which interrupt the critical supply of natural gas to the public, and which pose a life threatening circumstance to the customer, the permittee is allowed to temporarily replace failed engine(s). Proper notice will be provided to the WVDAQ
T5 – 3.3.1 – 45 CSR 22-5-4 Stack Testing – All protocols and reports will be submitted to the WVDAQ
T5 – 3.4.1 & 3.4.2 – 45 CSR 30-5.1 Retention of Records - Maintain records of all information required by permit for 5 yrs.
T5 – 3.4.3 – 45 CSR 30-5.1 Odors - Maintain records of all odor complaints and responses.
T5 – 3.5.1 – 45 CSR 30-4.4 *and* 5.1 Responsible Official - Reports, certifications, etc. shall contain a certification by the responsible official.

T5 – 3.5.4 – 45 CSR 30-8 Certified emissions statement – Operator will Submit a certified emissions statement and pay fees on an annual basis
T5 – 3.5.5 – 45 SR§30-5.3.e Compliance Certification - Prepare and submit an emission inventory as requested

T5 – 3.5.6 – 45 CSR§30-5.1.c.3.A. Semi-annual monitoring reports.
T5 – 3.5.7 – 45 CSR30-5.7.a through e. - For reporting emergency situations, refer to Section 2.17 of this permit
T5 – 3.5.8 – 45 CSR 30-5.1.c.3.B. and C. – Deviations, In addition to required monitoring reports, the permittee shall promptly submit supplemental reports and notices of deviations / include upset conditions, cause of deviation(s) and corrective actions.
T5 – 3.5.9 – 45 CSR 30-4.3.h.1.B. New applicable requirements. If any requirement is promulgated, the permittee will meet such requirements on a timely basis
T5 – 3.5.10 – 45 CSR 30-5.1.c.3.C. During compliance certification, the facility shall certify that the facility burns natural gas in all stationary equipment except, when applicable, for emergency equipment.

Are you in compliance with all facility-wide applicable requirements? ☒ Yes ☐ No

If no, complete the **Schedule of Compliance Form** as **ATTACHMENT F**.

21. Active Permits/Consent Orders		
Permit or Consent Order Number	Date of Issuance MM/DD/YYYY	List any Permit Determinations that Affect the Permit *(if any)*
CO-R1-C-2007-4A(2005)	03/01/2007	
R13-2064G	08/21/2015	
R30-10300010-2012 (SM-02)	12/29/2015	
	/ /	
	/ /	
	/ /	
	/ /	
	/ /	
	/ /	
	/ /	
	/ /	
	/ /	
	/ /	
	/ /	
	/ /	
	/ /	
	/ /	
	/ /	
	/ /	
	/ /	
	/ /	
	/ /	
	/ /	
	/ /	

22. Inactive Permits/Obsolete Permit Conditions		
Permit Number	Date of Issuance	Permit Condition Number
	/ /	
	/ /	
	/ /	
	/ /	
	/ /	
	/ /	
	/ /	
	/ /	
	/ /	
	/ /	
	/ /	
	/ /	
	/ /	
	/ /	
	/ /	
	/ /	
	/ /	
	/ /	
	/ /	
	/ /	
	/ /	
	/ /	
	/ /	
	/ /	
	/ /	

Section 3: Facility-Wide Emissions

23. Facility-Wide Emissions Summary [Tons per Year]	
Criteria Pollutants	Potential Emissions
Carbon Monoxide (CO)	101.82
Nitrogen Oxides (NO_X)	553.03
Lead (Pb)	-
Particulate Matter ($PM_{2.5}$)[1]	4.25
Particulate Matter (PM_{10})[1]	4.25
Total Particulate Matter (TSP)	4.25
Sulfur Dioxide (SO_2)	12.36
Volatile Organic Compounds (VOC)	25.21
Hazardous Air Pollutants[2]	Potential Emissions
Benzene	0.06
Toluene	0.11
Ethylbenzene	0.02
Xylene	0.05
n-Hexane	0.17
Formaldehyde	6.95
Acetaldehyde	1.07
Total HAPs	9.76
Regulated Pollutants other than Criteria and HAP	Potential Emissions
$CO2_e$	69,211.91

[1]$PM_{2.5}$ and PM_{10} are components of TSP.
[2]For HAPs that are also considered PM or VOCs, emissions should be included in both the HAPs section and the Criteria Pollutants section.

Section 4: Insignificant Activities

24. Insignificant Activities (Check all that apply)		
☒	1.	Air compressors and pneumatically operated equipment, including hand tools.
☐	2.	Air contaminant detectors or recorders, combustion controllers or shutoffs.
☒	3.	Any consumer product used in the same manner as in normal consumer use, provided the use results in a duration and frequency of exposure which are not greater than those experienced by consumer, and which may include, but not be limited to, personal use items; janitorial cleaning supplies, office supplies and supplies to maintain copying equipment.
☒	4.	Bathroom/toilet vent emissions.
☒	5.	Batteries and battery charging stations, except at battery manufacturing plants.
☐	6.	Bench-scale laboratory equipment used for physical or chemical analysis, but not lab fume hoods or vents. Many lab fume hoods or vents might qualify for treatment as insignificant (depending on the applicable SIP) or be grouped together for purposes of description.
☐	7.	Blacksmith forges.
☐	8.	Boiler water treatment operations, not including cooling towers.
☒	9.	Brazing, soldering or welding equipment used as an auxiliary to the principal equipment at the source.
☐	10.	CO_2 lasers, used only on metals and other materials which do not emit HAP in the process.
☒	11.	Combustion emissions from propulsion of mobile sources, except for vessel emissions from Outer Continental Shelf sources.
☒	12.	Combustion units designed and used exclusively for comfort heating that use liquid petroleum gas or natural gas as fuel.
☒	13.	Comfort air conditioning or ventilation systems not used to remove air contaminants generated by or released from specific units of equipment.
☐	14.	Demineralized water tanks and demineralizer vents.
☐	15.	Drop hammers or hydraulic presses for forging or metalworking.
☐	16.	Electric or steam-heated drying ovens and autoclaves, but not the emissions from the articles or substances being processed in the ovens or autoclaves or the boilers delivering the steam.
☐	17.	Emergency (backup) electrical generators at residential locations.

24. Insignificant Activities (Check all that apply)

☐ 18. Emergency road flares.

☒ 19. Emission units which do not have any applicable requirements and which emit criteria pollutants (CO, NO_x, SO_2, VOC and PM) into the atmosphere at a rate of less than 1 pound per hour and less than 10,000 pounds per year aggregate total for each criteria pollutant from all emission units.

Please specify all emission units for which this exemption applies along with the quantity of criteria pollutants emitted on an hourly and annual basis:

Tanks

Emission Point	*VOC Emissions (lb/hr)*	*VOC Emissions (lb/yr)*
A01	0.011	94.45
A02	0.000	2.34
A03	0.000	2.34
A06	0.000	0.26
A07	0.000	0.48
A08	0.000	0.48
A09	0.000	0.58
A10	0.000	0.58
A11	0.005	48.12
A12	0.005	48.12
A13	0.078	685.14
A14	0.078	685.14
A15	0.000	0.24
Totals	**0.18**	**1568.28**

☐ 20. Emission units which do not have any applicable requirements and which emit hazardous air pollutants into the atmosphere at a rate of less than 0.1 pounds per hour and less than 1,000 pounds per year aggregate total for all HAPs from all emission sources. This limitation cannot be used for any source which emits dioxin/furans nor for toxic air pollutants as per 45CSR27.

Please specify all emission units for which this exemption applies along with the quantity of hazardous air pollutants emitted on an hourly and annual basis:

☐ 21. Environmental chambers not using hazardous air pollutant (HAP) gases.

☒ 22. Equipment on the premises of industrial and manufacturing operations used solely for the purpose of preparing food for human consumption.

☐ 23. Equipment used exclusively to slaughter animals, but not including other equipment at slaughterhouses, such as rendering cookers, boilers, heating plants, incinerators, and electrical power generating equipment.

☒ 24. Equipment used for quality control/assurance or inspection purposes, including sampling equipment used to withdraw materials for analysis.

☐ 25. Equipment used for surface coating, painting, dipping or spray operations, except those that will emit VOC or HAP.

☒ 26. Fire suppression systems.

☒ 27. Firefighting equipment and the equipment used to train firefighters.

☒ 28. Flares used solely to indicate danger to the public.

☒ 29. Fugitive emission related to movement of passenger vehicle provided the emissions are not counted for

24. Insignificant Activities (Check all that apply)		
		applicability purposes and any required fugitive dust control plan or its equivalent is submitted.
☐	30.	Hand-held applicator equipment for hot melt adhesives with no VOC in the adhesive formulation.
☒	31.	Hand-held equipment for buffing, polishing, cutting, drilling, sawing, grinding, turning or machining wood, metal or plastic.
☐	32.	Humidity chambers.
☐	33.	Hydraulic and hydrostatic testing equipment.
☒	34.	Indoor or outdoor kerosene heaters.
☒	35.	Internal combustion engines used for landscaping purposes.
☐	36.	Laser trimmers using dust collection to prevent fugitive emissions.
☐	37.	Laundry activities, except for dry-cleaning and steam boilers.
☒	38.	Natural gas pressure regulator vents, excluding venting at oil and gas production facilities.
☐	39.	Oxygen scavenging (de-aeration) of water.
☐	40.	Ozone generators.
☒	41.	Plant maintenance and upkeep activities (e.g., grounds-keeping, general repairs, cleaning, painting, welding, plumbing, re-tarring roofs, installing insulation, and paving parking lots) provided these activities are not conducted as part of a manufacturing process, are not related to the source's primary business activity, and not otherwise triggering a permit modification. (Cleaning and painting activities qualify if they are not subject to VOC or HAP control requirements. Asphalt batch plant owners/operators must still get a permit if otherwise requested.)
☒	42.	Portable electrical generators that can be moved by hand from one location to another. "Moved by Hand" means that it can be moved without the assistance of any motorized or non-motorized vehicle, conveyance, or device.
☐	43.	Process water filtration systems and demineralizers.
☒	44.	Repair or maintenance shop activities not related to the source's primary business activity, not including emissions from surface coating or de-greasing (solvent metal cleaning) activities, and not otherwise triggering a permit modification.
☐	45.	Repairs or maintenance where no structural repairs are made and where no new air pollutant emitting facilities are installed or modified.
☐	46.	Routing calibration and maintenance of laboratory equipment or other analytical instruments.
☐	47.	Salt baths using nonvolatile salts that do not result in emissions of any regulated air pollutants. Shock chambers.
☐	48.	Shock chambers.
☐	49.	Solar simulators.
☒	50.	Space heaters operating by direct heat transfer.
☐	51.	Steam cleaning operations.
☐	52.	Steam leaks.
☐	53.	Steam sterilizers.
☒	54.	Steam vents and safety relief valves.
☐	55.	Storage tanks, reservoirs, and pumping and handling equipment of any size containing soaps, vegetable oil, grease, animal fat, and nonvolatile aqueous salt solutions, provided appropriate lids and covers are utilized.
☐	56.	Storage tanks, vessels, and containers holding or storing liquid substances that will not emit any VOC or HAP. Exemptions for storage tanks containing petroleum liquids or other volatile organic liquids should be based on size limits such as storage tank capacity and vapor pressure of liquids stored and are not

24. Insignificant Activities (Check all that apply)		
		appropriate for this list.
☐	57.	Such other sources or activities as the Director may determine.
☒	58.	Tobacco smoking rooms and areas.
☒	59.	Vents from continuous emissions monitors and other analyzers.

Section 5: Emission Units, Control Devices, and Emission Points

25. Equipment Table
Fill out the **Title V Equipment Table** and provide it as **ATTACHMENT D**.
26. Emission Units
For each emission unit listed in the **Title V Equipment Table**, fill out and provide an **Emission Unit Form** as **ATTACHMENT E**.
For each emission unit not in compliance with an applicable requirement, fill out a **Schedule of Compliance Form** as **ATTACHMENT F**.
27. Control Devices
For each control device listed in the **Title V Equipment Table**, fill out and provide an **Air Pollution Control Device Form** as **ATTACHMENT G**.
For any control device that is required on an emission unit in order to meet a standard or limitation for which the potential pre-control device emissions of an applicable regulated air pollutant is greater than or equal to the Title V Major Source Threshold Level, refer to the **Compliance Assurance Monitoring (CAM) Form(s)** for CAM applicability. Fill out and provide these forms, if applicable, for each Pollutant Specific Emission Unit (PSEU) as **ATTACHMENT H**.

Section 6: Certification of Information

28. Certification of Truth, Accuracy and Completeness and Certification of Compliance

*Note: This Certification must be signed by a responsible official. The **original**, signed in **blue ink**, must be submitted with the application. Applications without an **original** signed certification will be considered as incomplete.*

a. Certification of Truth, Accuracy and Completeness

I certify that I am a responsible official (as defined at 45CSR§30-2.38) and am accordingly authorized to make this submission on behalf of the owners or operators of the source described in this document and its attachments. I certify under penalty of law that I have personally examined and am familiar with the statements and information submitted in this document and all its attachments. Based on my inquiry of those individuals with primary responsibility for obtaining the information, I certify that the statements and information are to the best of my knowledge and belief true, accurate, and complete. I am aware that there are significant penalties for submitting false statements and information or omitting required statements and information, including the possibility of fine and/or imprisonment.

b. Compliance Certification

Except for requirements identified in the Title V Application for which compliance is not achieved, I, the undersigned hereby certify that, based on information and belief formed after reasonable inquiry, all air contaminant sources identified in this application are in compliance with all applicable requirements.

Responsible official (type or print)

Name: Eugene Wood	Title: Manager of Operations

Responsible official's signature:

Signature: Eug Wood Signature Date: 4/7/17

(Must be signed and dated in blue ink)

Note: Please check all applicable attachments included with this permit application:

☒	ATTACHMENT A: Area Map
☒	ATTACHMENT B: Plot Plan(s)
☒	ATTACHMENT C: Process Flow Diagram(s)
☒	ATTACHMENT D: Equipment Table
☒	ATTACHMENT E: Emission Unit Form(s)
☐	ATTACHMENT F: Schedule of Compliance Form(s)
☐	ATTACHMENT G: Air Pollution Control Device Form(s)
☐	ATTACHMENT H: Compliance Assurance Monitoring (CAM) Form(s)

All of the required forms and additional information can be found and downloaded from, the DEP website at www.dep.wv.gov/daq, requested by phone (304) 926-0475, and/or obtained through the mail.

ATTACHMENT A

AREA MAP

Title V Operating Permit Renewal Application

Smithfield Compressor Station, Facility ID No. 103-00010
Smithfield, West Virginia

Columbia Gas Transmission, LLC
1700 MacCorkle Avenue, SE
Charleston, West Virginia

April 2017

GPS Coordinates of Sites:
Lat: 39.48061, Long: -80.538336

UTM Coordinates of Sites:
Easting: 537.705 km, Northing: 4,370.215 km, Zone: 17

Columbia Gas Transmission, LLC
1700 MacCorkle Avenue, SE
Charleston, WV 25314

Report
Title V Operating Permit Renewal Application
Smithfield Compressor Station (ID No. 103-00010)

Drawing
Attachment A - Area Map

Date: September 2016

Drawn By: CLB

Project: 116.01272.00036

SLR

ATTACHMENT B

PLOT PLAN

Title V Operating Permit Renewal Application

Smithfield Compressor Station, Facility ID No. 103-00010
Smithfield, West Virginia

Columbia Gas Transmission, LLC
1700 MacCorkle Avenue, SE
Charleston, West Virginia

April 2017

SIGNIFICANT EMISSION UNITS		
Emission Point ID	Equipment Category	Status
BL1	Boiler No. 1	Existing
E01	Recip Engine/Integral Compressor # 09801	Existing
E02	Recip Engine/Integral Compressor # 09802	Existing
E05	Turbine Engine/Centrifugal Compressor # 09805	Existing
E06	Combustion Turbine/Compressor # 09806	Existing
G3	Recip Engine/Generator # 09803	Existing
H1	Line Heater # HTR1	Existing
H2	Line Heater # HTR2	Existing
H3	Line Heater # HTR3	Existing

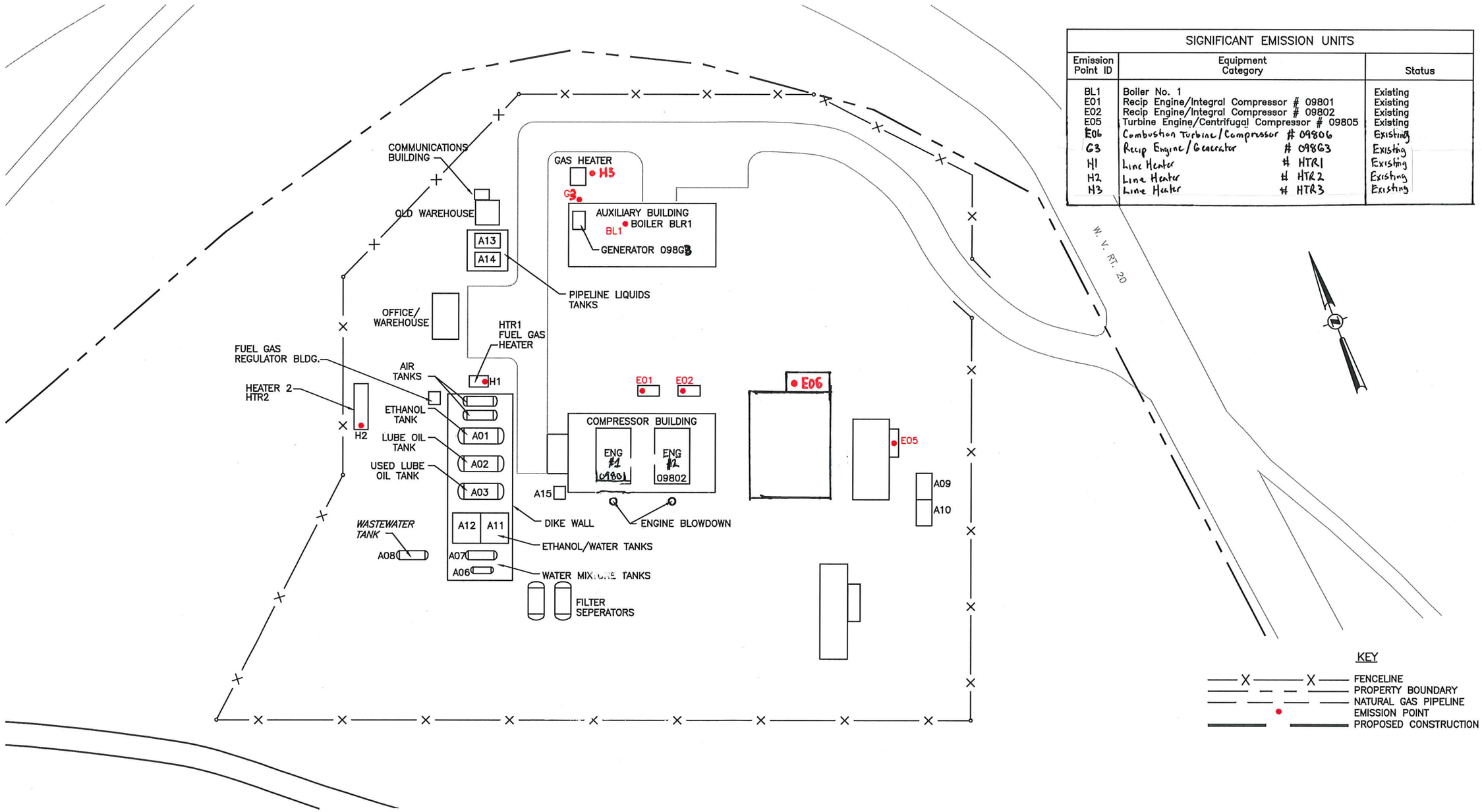

MAPPING REFERENCE:
DRAWING TITLED "SMITH-4" rev. 4 PROVIDED TO POTESTA & ASSOCIATES, INC. BY NISOURCE.

POTESTA

POTESTA & ASSOCIATES, INC.
ENGINEERS AND ENVIRONMENTAL CONSULTANTS
7012 MacCorkle Ave. SE, Charleston, WV 25304
TEL: (304) 342-1400 FAX: (304) 343-9031
E-Mail Address: potesta@potesta.com

Project
SITE PLAN
COLUMBIA GAS TRANSMISSION CORP.
SMITHFIELD STATION

Scale NOT TO SCALE
Date OCT. 2011
Dwg. No. 6

PROJECT #: 10-0412-022 FILENAME: B10-0412-06

XREF Files:
IMAGE Files:
File: S:\C3D-Proj-YR\2010\10-0412-nisourse\022\B10-0412-06.dwg
Plot Date/Time: Oct 11, 2011 - 9:11am
Plotted By: BELeedy

ATTACHMENT C

PROCESS FLOW DIAGRAM

Title V Operating Permit Renewal Application

Smithfield Compressor Station, Facility ID No. 103-00010
Smithfield, West Virginia

Columbia Gas Transmission, LLC
1700 MacCorkle Avenue, SE
Charleston, West Virginia

April 2017

ATTACHMENT C
SMITHFIELD COMPRESSOR STATION PROCESS FLOW DIAGRAM

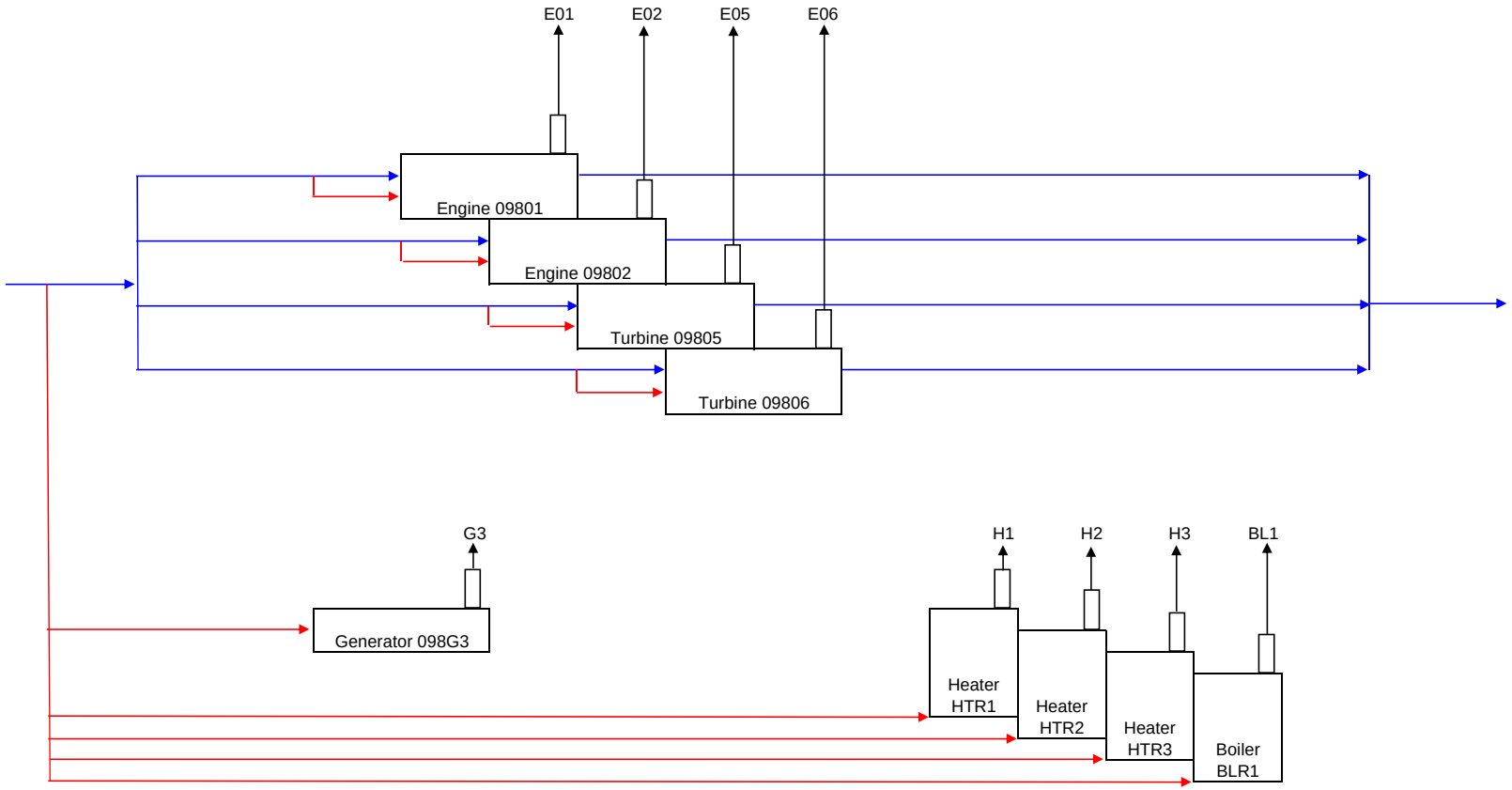

Transmission Gas Stream
Fuel Gas
Emission Stream

Columbia Gas Transmission

ATTACHMENT D

EQUIPMENT TABLE

Title V Operating Permit Renewal Application

Smithfield Compressor Station, Facility ID No. 103-00010
Smithfield, West Virginia

Columbia Gas Transmission, LLC
1700 MacCorkle Avenue, SE
Charleston, West Virginia

April 2017

ATTACHMENT D - Title V Equipment Table

(includes all emission units at the facility except those designated as insignificant activities in Section 4, Item 19 of the General Forms)

Emission Point ID[1]	Control Device[1]	Emission Unit ID[1]	Emission Unit Description	Design Capacity	Year Installed/ Modified
E01	N/A	09801*	Reciprocating Engine/Integral Compressor; Ingersoll-Rand 410 KVGB; 4 Cycle, Lean Burn	1,500 hp	1963
E02	N/A	09802*	Reciprocating Engine/Integral Compressor; Ingersoll-Rand 410 KVGB; 4 Cycle, Lean Burn	1,500 hp	1963
E05	N/A	09805*	Turbine Engine/Centrifugal Compressor; Solar; Taurus 60-7302S	6,736 hp	1999
E06	N/A	09806*	Combustion Turbine/Compressor; Solar; Centaur 40	4,213 hp @ 32°F 4,433 hp @ 0°F	2015
G3	N/A	098G3*	Reciprocating Engine/Generator; Waukesha VGF-F18GL; 4 Cycle, Lean Burn	440 hp 530 hp (R13-2064G)	2014
BL1	N/A	BLR1*	Heating System Boiler; American Standard; Model # 1 BN-J-3	2.284 mmBtu/hr 3.4 mmBtu/hr (R13-2064G)	1963
H1	N/A	HTR1*	Line Heater; BS&B; Model # J-92-02	0.25 MMBtu/hr	1970
H2	N/A	HTR2*	Line Heater; Total Energy Resources Inc; Model # FAH 18-6	0.5 MMBtu/hr	1999
H3	N/A	HTR3*	Heater #3; Unknown Make; Model	0.30 MMBtu/hr	2014

[1]For 45CSR13 permitted sources, the numbering system used for the emission points, control devices, and emission units should be consistent with the numbering system used in the 45CSR13 permit. For grandfathered sources, the numbering system should be consistent with registrations or emissions inventory previously submitted to DAQ. For emission points, control devices, and emissions units which have not been previously labeled, use the following 45CSR13 numbering system: 1S, 2S, 3S,... or other appropriate description for emission units; 1C, 2C, 3C,... or other appropriate designation for control devices; 1E, 2E, 3E, ... or other appropriate designation for emission points.

*This equipment burns pipeline quality natural gas only.

ATTACHMENT E

EMISSION UNIT FORM(S)

Title V Operating Permit Renewal Application

Smithfield Compressor Station, Facility ID No. 103-00010
Smithfield, West Virginia

Columbia Gas Transmission, LLC
1700 MacCorkle Avenue, SE
Charleston, West Virginia

April 2017

ATTACHMENT E - Emission Unit Form

Emission Unit Description

Emission unit ID number	**Emission unit name:**	**List any control devices associated with this emission unit:**
09801	Reciprocating Engine/Integral Compressor	NA

Provide a description of the emission unit (type, method of operation, design parameters, etc.):
4-cycle, lean burn

Manufacturer:	**Model number:**	**Serial number:**
Ingersoll Rand	410 KVGB	NA
Construction date:	**Installation date:**	**Modification date(s):**
NA	1963	NA

Design Capacity (examples: furnaces - tons/hr, tanks - gallons): 1500 hp

Maximum Hourly Throughput:	**Maximum Annual Throughput:**	**Maximum Operating Schedule:**
NA	NA	8,760

Fuel Usage Data **(fill out all applicable fields)**

Does this emission unit combust fuel? X Yes ___ No	**If yes, is it?** __ Indirect Fired X Direct Fired
Maximum design heat input and/or maximum horsepower rating: 1500 hp	**Type and Btu/hr rating of burners:** 9,500 Btu/hp-hr

List the primary fuel type(s) and if applicable, the secondary fuel type(s). For each fuel type listed, provide the maximum hourly and annual fuel usage for each.
Natural Gas
15,368 scf/hr / 134,623,680 scf/yr

Describe each fuel expected to be used during the term of the permit.

Fuel Type	Max. Sulfur Content	Max. Ash Content	BTU Value
Natural Gas	Pipeline Quality		1,020 Btu/scf

Emissions Data		
Criteria Pollutants	Potential Emissions	
	PPH	TPY
Carbon Monoxide (CO)	See Appendix A	
Nitrogen Oxides (NO_X)		
Lead (Pb)		
Particulate Matter ($PM_{2.5}$)		
Particulate Matter (PM_{10})		
Total Particulate Matter (TSP)		
Sulfur Dioxide (SO_2)		
Volatile Organic Compounds (VOC)		
Hazardous Air Pollutants	Potential Emissions	
	PPH	TPY
	See Appendix A	
Regulated Pollutants other than Criteria and HAP	Potential Emissions	
	PPH	TPY

List the method(s) used to calculate the potential emissions (include dates of any stack tests conducted, versions of software used, source and dates of emission factors, etc.).

See Appendix A

Applicable Requirements

List all applicable requirements for this emission unit. For each applicable requirement, include the underlying rule/regulation citation and/or construction permit with the condition number. (*Note: Title V permit condition numbers alone are not the underlying applicable requirements*). If an emission limit is calculated based on the type of source and design capacity or if a standard is based on a design parameter, this information should also be included.

40 C.F.R. 63 Subpart ZZZZ

40 C.F.R. § 63.6603(a) and Table 2d (Line 8) – Maintenance Requirements

40 C.F.R. § 63.6605 – Operating Requirements

40 C.F.R. § 63.6625(e)(5), (h), and (j) – Monitoring Requirements

40 C.F.R. § 63.6640(a) and Table 6 (Line 9) – Continuous Compliance Requirements

40 C.F.R. § 63.6660 – Recordkeeping Requirements

40 C.F.R. § 63.6665 – General Requirements/Provisions

45 C.S.R. 13, Permit R13-2064G

Condition 9.1.1 – The permittee must comply with the applicable operating limitations in this section no later than 10/19/2013. [40CFR§63.6595(a)(1)]

Condition 9.1.3 – The following are the applicable RICE MACT requirements according to the "Summary of Requirements" table provided by EPA

Emission Limitations	Operating Limitations	Monitoring Requirements	Continuous Compliance	Notification Requirements	Recordkeeping Requirements
§ 63.6603 and Table 2d (Line 8)	§ 63.6603	§§ 63.6625 (h), (j)	§ 63.6605, § 63.6640(a), (e) Table 6 (Line 9)	§ 63.6645(a)(5)	§§ 63.6655(a), (d), (e)

X Permit Shield

For all applicable requirements listed above, provide monitoring/testing/recordkeeping/reporting which shall be used to demonstrate compliance. If the method is based on a permit or rule, include the condition number or citation. (Note: Each requirement listed above must have an associated method of demonstrating compliance. If there is not already a required method in place, then a method must be proposed.)

40 C.F.R. 63 Subpart ZZZZ

40 C.F.R. § 63.6603 (a) and Table 2d (Line 8) – Change oil and oil filter, and inspect spark plugs, hoses, and belts every 2,160 hours of operation, or annually, whichever occurs first, and replace as necessary

40 C.F.R. § 63.6605 – Must comply with all emission, operating, and work practice standards at all times.

40 C.F.R. § 63.6625(e)(5), 63.6640 and Table 6 (Line 9) – Work or Management Practices: Operate and Maintain the RICE according to the manufacturer's instructions OR develop and follow your own maintenance plan

40 C.F.R. § 63.6625 (h) – Minimize Idle Time during Startup to not exceed 30 Minutes

40 C.F.R. § 63.6625 (j) – Oil Analysis Program in lieu of Oil change requirement in Table 2d (Line 8)

40 C.F.R. § 63.6655 (d), and (e)(3) – Keep records of maintenance conducted and operating schedule on the RICE

40 C.F.R. § 63.6660 – Records retained for five (5) years and readily available for expeditious review

Are you in compliance with all applicable requirements for this emission unit? X Yes ___No

If no, complete the **Schedule of Compliance Form** as **ATTACHMENT F**.

ATTACHMENT E - Emission Unit Form

Emission Unit Description

Emission unit ID number	**Emission unit name:**	**List any control devices associated with this emission unit:**
09802	Reciprocating Engine/Integral Compressor	NA

Provide a description of the emission unit (type, method of operation, design parameters, etc.):
4-cycle, lean burn

Manufacturer:	**Model number:**	**Serial number:**
Ingersoll Rand	410 KVGB	NA
Construction date:	**Installation date:**	**Modification date(s):**
NA	1963	NA

Design Capacity (examples: furnaces - tons/hr, tanks - gallons): 1500 hp

Maximum Hourly Throughput:	**Maximum Annual Throughput:**	**Maximum Operating Schedule:**
NA	NA	8,760

Fuel Usage Data **(fill out all applicable fields)**

Does this emission unit combust fuel? X Yes ___ No	**If yes, is it?** __ Indirect Fired X Direct Fired
Maximum design heat input and/or maximum horsepower rating: 1500 hp	**Type and Btu/hr rating of burners:** 9,500 Btu/hp-hr

List the primary fuel type(s) and if applicable, the secondary fuel type(s). For each fuel type listed, provide the maximum hourly and annual fuel usage for each.
Natural Gas
15,368 scf/hr / 134,623,680 scf/yr

Describe each fuel expected to be used during the term of the permit.

Fuel Type	Max. Sulfur Content	Max. Ash Content	BTU Value
Natural Gas	Pipeline Quality		1,020 Btu/scf

Emissions Data		
Criteria Pollutants	Potential Emissions	
	PPH	TPY
Carbon Monoxide (CO)	See Appendix A	
Nitrogen Oxides (NO_X)		
Lead (Pb)		
Particulate Matter ($PM_{2.5}$)		
Particulate Matter (PM_{10})		
Total Particulate Matter (TSP)		
Sulfur Dioxide (SO_2)		
Volatile Organic Compounds (VOC)		
Hazardous Air Pollutants	Potential Emissions	
	PPH	TPY
	See Appendix A	
Regulated Pollutants other than Criteria and HAP	Potential Emissions	
	PPH	TPY

List the method(s) used to calculate the potential emissions (include dates of any stack tests conducted, versions of software used, source and dates of emission factors, etc.).

See Appendix A

Applicable Requirements

List all applicable requirements for this emission unit. For each applicable requirement, include the underlying rule/regulation citation and/or construction permit with the condition number. (*Note: Title V permit condition numbers alone are not the underlying applicable requirements*). If an emission limit is calculated based on the type of source and design capacity or if a standard is based on a design parameter, this information should also be included.

40 C.F.R. 63 Subpart ZZZZ

40 C.F.R. § 63.6603(a) and Table 2d (Line 8) – Maintenance Requirements

40 C.F.R. § 63.6605 – Operating Requirements

40 C.F.R. § 63.6625(e)(5), (h), and (j) – Monitoring Requirements

40 C.F.R. § 63.6640(a) and Table 6 (Line 9) – Continuous Compliance Requirements

40 C.F.R. § 63.6660 – Recordkeeping Requirements

40 C.F.R. § 63.6665 – General Requirements/Provisions

45 C.S.R. 13, Permit R13-2064G

Condition 9.1.1 – The permittee must comply with the applicable operating limitations in this section no later than 10/19/2013. [40CFR§63.6595(a)(1)]

Condition 9.1.3 – The following are the applicable RICE MACT requirements according to the "Summary of Requirements" table provided by EPA

Emission Limitations	Operating Limitations	Monitoring Requirements	Continuous Compliance	Notification Requirements	Recordkeeping Requirements
§ 63.6603 and Table 2d (Line 8)	§ 63.6603	§§ 63.6625 (h), (j)	§ 63.6605, § 63.6640(a), (e) Table 6 (Line 9)	§ 63.6645(a)(5)	§§ 63.6655(a), (d), (e)

X Permit Shield

For all applicable requirements listed above, provide monitoring/testing/recordkeeping/reporting which shall be used to demonstrate compliance. If the method is based on a permit or rule, include the condition number or citation. (Note: Each requirement listed above must have an associated method of demonstrating compliance. If there is not already a required method in place, then a method must be proposed.)

40 C.F.R. 63 Subpart ZZZZ

40 C.F.R. § 63.6603 (a) and Table 2d (Line 8) – Change oil and oil filter, and inspect spark plugs, hoses, and belts every 2,160 hours of operation, or annually, whichever occurs first, and replace as necessary

40 C.F.R. § 63.6605 – Must comply with all emission, operating, and work practice standards at all times.

40 C.F.R. § 63.6625(e)(5), 63.6640 and Table 6 (Line 9) – Work or Management Practices: Operate and Maintain the RICE according to the manufacturer's instructions OR develop and follow your own maintenance plan

40 C.F.R. § 63.6625 (h) – Minimize Idle Time during Startup to not exceed 30 Minutes

40 C.F.R. § 63.6625 (j) – Oil Analysis Program in lieu of Oil change requirement in Table 2d (Line 8)

40 C.F.R. § 63.6655 (d), and (e)(3) – Keep records of maintenance conducted and operating schedule on the RICE

40 C.F.R. § 63.6660 – Records retained for five (5) years and readily available for expeditious review

Are you in compliance with all applicable requirements for this emission unit? X Yes ___No

If no, complete the **Schedule of Compliance Form** as **ATTACHMENT F**.

ATTACHMENT E - Emission Unit Form

Emission Unit Description

Emission unit ID number:	**Emission unit name:**	**List any control devices associated with this emission unit:**
09805	Turbine Engine /Centrifugal Compressor	NA

Provide a description of the emission unit (type, method of operation, design parameters, etc.):
Turbine Engine

Manufacturer:	**Model number:**	**Serial number:**
Solar	Taurus 60-7302S	NA
Construction date:	**Installation date:**	**Modification date(s):**
NA	1999	NA

Design Capacity (examples: furnaces - tons/hr, tanks - gallons): 6,736 hp

Maximum Hourly Throughput:	**Maximum Annual Throughput:**	**Maximum Operating Schedule:**
NA	NA	8,760

Fuel Usage Data **(fill out all applicable fields)**

Does this emission unit combust fuel? X Yes ___ No	**If yes, is it?** ___ Indirect Fired X Direct Fired
Maximum design heat input and/or maximum horsepower rating: 6,736 hp	**Type and Btu/hr rating of burners:** 8,000 Btu/hp-hr

List the primary fuel type(s) and if applicable, the secondary fuel type(s). For each fuel type listed, provide the maximum hourly and annual fuel usage for each.
Natural Gas
59,451 scf/hr / 462,799,560 scf/yr

Describe each fuel expected to be used during the term of the permit.

Fuel Type	Max. Sulfur Content	Max. Ash Content	BTU Value
Natural Gas	Pipeline Quality		1,020 Btu/scf

Emissions Data		
Criteria Pollutants	Potential Emissions	
	PPH	TPY
Carbon Monoxide (CO)	See Appendix A	
Nitrogen Oxides (NO_X)		
Lead (Pb)		
Particulate Matter ($PM_{2.5}$)		
Particulate Matter (PM_{10})		
Total Particulate Matter (TSP)		
Sulfur Dioxide (SO_2)		
Volatile Organic Compounds (VOC)		
Hazardous Air Pollutants	Potential Emissions	
	PPH	TPY
	See Appendix A	
Regulated Pollutants other than Criteria and HAP	Potential Emissions	
	PPH	TPY

List the method(s) used to calculate the potential emissions (include dates of any stack tests conducted, versions of software used, source and dates of emission factors, etc.).

See Appendix A

Applicable Requirements

List all applicable requirements for this emission unit. For each applicable requirement, include the underlying rule/regulation citation and/or construction permit with the condition number. (*Note: Title V permit condition numbers alone are not the underlying applicable requirements*). If an emission limit is calculated based on the type of source and design capacity or if a standard is based on a design parameter, this information should also be included.

40 C.F.R. 60 Subpart GG
40 C.F.R. § 60.330 – Applicability

40 C.F.R. § 60.332(a)(2), and 60.332(c) – NO_X Operating Requirements

40 C.F.R. § 60.333 – SO_2 Operating Requirements

40 C.F.R. § 60.334(c), (h)(1), (h)(2), (h)(3)(i), (h)(3)(ii), (i)(2), and (j) – Monitoring Requirements

40 C.F.R. § 60.335 – Testing Requirements

45 C.S.R. 13, Permit R13-2064G
Condition 5.1.1 – Maximum hourly emission rates from the unit shall not exceed the following;

Operating Mode	Emissions (lb/hr)	
	NO_X	**CO**
Full Load (@ 0°F)	6.11	7.44
Low Load Operations (<50%)	11.47	219.34
Low-Temp Operations (< -0°F)	30.36	23.10
Startup/Shutdown	3.86	72.00

Condition 5.1.2 – Maximum annual emission rates from the unit shall not exceed the following;

	Emissions (ton/yr)
NO_X	39.00
CO	99.00

Condition 5.1.3 – The unit shall not consume no more than 66,426 scf of natural gas per hour or 582 x 10^6 scf of natural gas per year.

Condition 5.1.7 – Facility shall comply with all applicable provisions of 40 CFR 60.332, 60.333, 60.334, and 60.335 provided that compliance with any more stringent limitation set forth in this permit shall also be demonstrated. The permittee must notify the Director of the DAQ of excess emissions as required.

Condition 5.1.13 – The unit shall be operated and maintained in accordance with the manufacturer's recommendations and specifications and in a manner consistent with good operating practices and shall only burn natural gas.

X Permit Shield

For all applicable requirements listed above, provide monitoring/testing/recordkeeping/reporting which shall be used to demonstrate compliance. If the method is based on a permit or rule, include the condition number or citation. (Note: Each requirement listed above must have an associated method of demonstrating compliance. If there is not already a required method in place, then a method must be proposed.)

40 C.F.R. 60 Subpart GG
40 C.F.R. § 60.332(a)(2) and 60.332(c) – No owner/operator shall cause to be discharged into the atmosphere from any stationary gas turbine, any gases that contain NO_X in excess of;

$$STD = 0.0150\frac{(14.4)}{Y} + F$$

where:

STD = the allowable ISO corrected NO_X emission concentration (percent by volume @ 15% O^2 on a dry basis),
Y = manufacturer's rated heat rate at rated peak load (kilojoules per watt hour), or actual measured heat rate based on lower heating value of fuel as measured at actual peak load for the facility. The value of U shall not exceed 14.4 kj/W-hr, and

F = NOX emission allowance for fuel bound nitrogen

40 C.F.R. § 60.333 – No owner/operator shall cause to be discharged into the atmosphere from any stationary gas turbine gases which contain SO_2 in excess of 0.015 percent by volume at 15% O^2 and on a dry basis or any fuel which contains total sulfur in excess of 0.8 percent by weight (8000 ppmw)

40 C.F.R. § 60.334(c) – For any turbine that commenced construction, reconstruction or modification after October 3, 1977, but before July 8, 2004, and which does not use steam or water injection to control NO_X emissions, the owner or operator may, but is not required to, for purposes of determining excess emissions, use a CEMS that meets the requirements of paragraph (b) of this section. Also, if the owner or operator has previously submitted and received EPA, State, or local permitting authority approval of a procedure for monitoring compliance with the applicable NO_X emission limit under §60.332, that approved procedure may continue to be used

40 C.F.R. § 60.334(h)(1) – Owner/operators shall monitor the total sulfur content of the fuel being fired in the turbine

40 C.F.R. § 60.334(h)(2) – Owner/operators shall monitor the nitrogen content of the fuel combusted in the turbine, if the owner or operator claims an allowance for fuel bound nitrogen (*i.e.*, if an F-value greater than zero is being or will be used by the owner or operator to calculate STD in §60.332)

40 C.F.R. § 60.334(h)(3)(i) and 60.334(h)(3)(ii) – Owner/operators may elect not to monitor the total sulfur content of the gases fuel combusted in the turbine, if the fuel is demonstrated to meet the definition of natural gas in 60.331(u) by demonstrating the gas quality characteristics in a current, valid purchase contract, tariff sheet or transportation contract for the gaseous fuel specifying the maximum total sulfur content to be 20 grains/100 scf or less or by representative fuel sampling data showing the sulfur content of the gaseous fuel does not exceed 20 grains/100 scf

40 C.F.R. § 60.334(i)(2) – Any applicable nitrogen content value of the gaseous fuel shall be determined and recorded once daily. For owners/operators that elect not to demonstrate sulfur content using options in paragraph (h)(3) of this section, and for which the fuel is supplied without intermediate bulk storage, the sulfur content value of the gaseous fuel shall also be determined and recorded once daily.

40 C.F.R. § 60.334(j) – For each affected unit that elects to continuously monitor parameters or emissions, or to periodically determine the fuel sulfur content or nitrogen fuel content, the owner/operator shall submit reports of excess emissions and monitor downtime

40 C.F.R. § 60.335 – Owner/operators shall conduct the performance tests required in §60.8

45 C.S.R. 13, Permit R13-2064G
Condition 5.2.1 – At such reasonable times as the Secretary may designate, the permittee shall conduct Method 9 emission observations for the purpose of demonstrating compliance with Condition 5.1.13. Method 9 shall be conducted in accordance with 40 CFR 60 Appendix A.

Condition 5.3.1 – In the event that the Secretary requests emission tests to be conducted to determine CO, NO_X, PM_{10}, SO_2, and VOC from emission points, the methods listed below form Appendix A of 40 CFR 60 shall be utilized for purposes of conducting performance tests unless the Secretary approves an alternative or equivalent method

Pollutant	*Method*
CO	10, 10A or 10B
NO_X	40 CFR 60 Subpart GG
Formaldehyde	18
SO_2	40 CFR 60 Subpart GG
VOC	25 or 25A

Condition 5.4.1 – To demonstrate compliance with section 5.1.2, the permittee shall maintain monthly operating hours at normal dry low NO_X (DLN) conditions, non-dry low NO_X (non-DLN) conditions and low ambient temperature conditions as well as the monthly number of startup and shutdown cycles. These monthly records will be used to calculate monthly emissions (ME) for each regulated pollutant (P_X) using the following equation;

ME P_X = DLN P_X * DLN hrs + non DLN P_X * non DLN hrs + LT P_X * LT hrs + SSP_X * SS cycles

Where: DLN P_X, non DLN P_X, LT P_X and SS P_X are the unit emission rates (lb/hr or lb/cycle) for pollutant X during normal DLN, non dry Low NO_X, low temperature, and startup/shutdown operation, respectively.

Condition 5.4.2 – To demonstrate compliance with Condition 5.1.1, the permittee shall utilize the monthly emission formula listed Condition 5.4.1 and keep records of operation

Condition 5.4.3 – To demonstrate compliance with section 5.1.3, the permittee shall maintain records of the amount of natural gas

consumed. Said records shall be maintained on site for a period of five (5) years and shall be made available to the Director of the DAQ or his/her duly authorized representative upon request and shall be certified by a responsible official upon submittal

Condition 5.5.1 – All required under 40 CFR 60 Subpart GG shall be maintained by the owner or operator of the affected facility for a period of two (2) years following the date of such record

Condition 5.5.2 – The permitted facility shall comply with all applicable provisions of 40 CFR 60 Subpart GG. The permittee must also notify the Director of excess emissions as required

Are you in compliance with all applicable requirements for this emission unit? X Yes ___No

If no, complete the **Schedule of Compliance Form** as **ATTACHMENT F**.

ATTACHMENT E - Emission Unit Form

Emission Unit Description

Emission unit ID number:	**Emission unit name:**	**List any control devices associated with this emission unit:**
09806	Combustion Turbine/Compressor	NA

Provide a description of the emission unit (type, method of operation, design parameters, etc.):
Combustion Turbine/Compressor

Manufacturer:	**Model Number:**	**Serial Number:**
Solar	Centaur 40	NA
Construction Date:	**Installation Date:**	**Modification Date(s):**
NA	2015	NA

Design Capacity (examples: furnaces - tons/hr, tanks - gallons):

4,213 hp @ 32°F

4,433 hp @ 0°F

Maximum Hourly Throughput:	**Maximum Annual Throughput:**	**Maximum Operating Schedule:**
NA	NA	NA

Fuel Usage Data **(fill out all applicable fields)**

Does this emission unit combust fuel? X Yes ___ No	**If yes, is it?** ___ Indirect Fired X Direct Fired
Maximum design heat input and/or maximum horsepower rating: 4,213 hp @ 32°F 4,433 hp @ 0°F	**Type and Btu/hr rating of burners:** 9,843 Btu/hp-hr @ 32°F 9,889 Btu/hp-hr @ 0°F

List the primary fuel type(s) and if applicable, the secondary fuel type(s). For each fuel type listed, provide the maximum hourly and annual fuel usage for each.
Natural Gas
47,706 scf/hr / 395.32 mmscf/yr

Describe each fuel expected to be used during the term of the permit.

Fuel Type	Max. Sulfur Content	Max. Ash Content	BTU Value
Natural Gas	Pipeline Quality		1,020 Btu/scf

Emissions Data		
Criteria Pollutants	Potential Emissions	
	PPH	TPY
Carbon Monoxide (CO)	See Appendix A	
Nitrogen Oxides (NO_X)		
Lead (Pb)		
Particulate Matter ($PM_{2.5}$)		
Particulate Matter (PM_{10})		
Total Particulate Matter (TSP)		
Sulfur Dioxide (SO_2)		
Volatile Organic Compounds (VOC)		
Hazardous Air Pollutants	Potential Emissions	
	PPH	TPY
	See Appendix A	
Regulated Pollutants other than Criteria and HAP	Potential Emissions	
	PPH	TPY

List the method(s) used to calculate the potential emissions (include dates of any stack tests conducted, versions of software used, source and dates of emission factors, etc.).

See Appendix A

Applicable Requirements

List all applicable requirements for this emission unit. For each applicable requirement, include the underlying rule/regulation citation and/or construction permit with the condition number. (*Note: Title V permit condition numbers alone are not the underlying applicable requirements*). If an emission limit is calculated based on the type of source and design capacity or if a standard is based on a design parameter, this information should also be included.

40 C.F.R. 60 Subpart KKKK
40 C.F.R. § 60.4305(a) – Applicability

40 C.F.R. § 60.4320, 60.4330(a) and Table 1 (Line 3) – Operating Requirements

40 C.F.R. § 60.4333(a) – General Requirements

40 C.F.R. § 60. 4340(a) and 60.4400 – Continuous Compliance Requirements

40 C.F.R. § 60.4360, 60.4365, and 60.4370(b) – Monitoring Requirements

40 C.F.R. § 60.4375 and 60.4395 – Reporting Requirements

40 C.F.R. 63 Subpart YYYY
40 C.F.R. § 63.6095(d) – Compliance Requirements

40 C.F.R. § 63.6145(a) and (c) – Notification Requirements

45 C.S.R. 13, Permit R13-2064G
Condition 5.1.4 – Maximum hourly emission rates from the unit shall not exceed the following;

Operating Mode	Emissions (lb/hr)		
	NO_X	**CO**	**VOC**
Full Load (@ 32°F)	4.14	5.05	0.29
Low Load (<50%)	7.51	304.73	3.48
Low-Temp (< 0 to -20°F)	7.67	11.11	0.63
Very Low Temp (<-20°F)	21.90	16.67	0.63
Startup/Shutdown	1.00	94.60	1.08

Condition 5.1.5 – Maximum annual emission rates from the unit shall not exceed the following;

	Emissions (ton/yr)
NO_X	18.30
CO	32.09
VOC	1.38

Condition 5.1.6 – The unit shall consume no more than 47,708 scf of natural gas per hour or 395.33 scf of natural gas per year

Condition 5.1.8 – NO_X emissions shall not exceed 25 ppm at 15% O_2 or 1.2 lb/MWh gross output. When operating at less than 75% peak load or at temperatures less than 0°F, the emission limit for NO_X is 150 ppm at 15% O_2 or 8.7 lb/MWh gross output.

Condition 5.1.9 – SO_2 emissions shall not exceed 0.90 lb/MWh gross output or 0.060 lb SO_2/mmBtu heat input.

Condition 5.1.10 – The permittee may elect not to monitor the total sulfur content of the fuel combusted in the unit, if the fuel is demonstrated not to exceed potential sulfur emissions of 26 ng of SO2/J (0.060 lb/mmBtu) heat input for units located in continental areas. You must use one of the following sources of information to make the required documentation;

a. The fuel quality characteristics in a current, valid purchase contract, tariff sheet or transportation contract for the fuel, specifying that the maximum total sulfur content for oil use in continental areas is 0.05 weight percent (500 ppmw) or less, the total sulfur content for natural gas use in continental areas is 20 grains of sulfur or less per 100 scf, has potential sulfur emissions of less than 26 ng SO2/J (0.060 lb/mmBtu) heat input for continental areas; or
b. Representative fuel sampling data which show that the sulfur content of the fuel does not exceed 26 ng SO2/J (0.060 lb SO2/mmBtu) heat input for continental areas. At a minimum the amount of fuel sampling data specified in 2.3.1.4 or 2.3.2.4 of appendix D to part 75 of this chapter is required.

Condition 5.1.11 – **40 CFR 63 Subpart YYYY Notification Requirements**

- You must submit all the notifications in §§ 63.7(b) and (c), 63.8(e), 63.8(f)(4), and 63.9(b) and (h) that apply to you by the dates specified
- As specified in § 63.9(b), if you start up your new or reconstructed stationary combustion turbine on or after March 5, 2004, you must submit an Initial Notification not later than 120 calendar days after you become subject to 40CFR63 Subpart YYYY.
- If you are required to submit an Initial Notification but are otherwise not affected by the emission limitation requirements of 40CFR63 Subpart YYYY, in accordance with §63.6090(b), your notification must include the information in §63.9(b)(2)(i) through (v) and a statement that your new or reconstructed stationary combustion turbine has no additional emission limitation requirements and must explain the basis of exclusion.

Condition 5.1.12 – The permittee must operate and maintain the unit in a manner consistent with good air pollution control practices for minimizing emissions at all times including during startup, shutdown, and malfunction.

Condition 5.1.13 – The unit shall be operated and maintained in accordance with the manufacturer's recommendations and specifications and in a manner consistent with good operating practices and shall only burn natural gas.

X Permit Shield

For all applicable requirements listed above, provide monitoring/testing/recordkeeping/reporting which shall be used to demonstrate compliance. If the method is based on a permit or rule, include the condition number or citation. (Note: Each requirement listed above must have an associated method of demonstrating compliance. If there is not already a required method in place, then a method must be proposed.)

40 C.F.R. 60 Subpart KKKK
40 C.F.R. § 60.4320 and Table 1 (Line 3) – Unit must meet NOx emission standards; 25 ppm at 15% O_2 or 150 ng/J of useful output

40 C.F.R. § 60.4330(a)(2) – Unit shall not burn any fuel which contains total potential sulfur emissions in excess of 0.06 lb/MMbtu heat input

40 C.F.R. § 60.4333(a) – Must operate and maintain unit and associated equipment in a manner consistent with good engineering practices

40 C.F.R. § 60. 4340(a) and 60.4400 – Conduct initial performance test within 180 days of startup or within 60 days of achieving maximum load operation, whichever comes first. Subsequent testing shall be conducted on an annual basis no more than fourteen (14) months following previous test. There are two test methodologies that shall be used in conducting the performance testing; (i) – measure NOx concentration in PPM using EPA Method 7E or EPA Method 20, or (ii) – measure NOx and diluent gas concentrations using either EPA Methods 3A or 7E, or Method 20.

40 C.F.R. § 60.4360 – Monitor sulfur content of fuel being fired to turbine

40 C.F.R. § 60.4365 – Permittee can elect to not monitor sulfur content being fired to turbine if fuel is demonstrated to not exceed potential sulfur emissions of 0.06 lb SO_2/mmBtu

40 C.F.R. § 60.4370(b) – If you elect not to demonstrate sulfur content using options in §60.4365, and the fuel is supplied without intermediate bulk storage, the sulfur content value of the gaseous fuel must be determined and recorded once per unit operating day.

40 C.F.R. 63 Subpart YYYY
40 C.F.R. § 63.6095(d) – *Stay of Standards for Gas-Fired Subcategories;* New or Reconstructed stationary combustion turbines as defined by this subpart need not comply with any requirements other than those set forth in § 63.6145 until EPA takes final action.

40 C.F.R. § 63.6145(a) and (c) – Submit the required initial notification for new or reconstructed stationary combustion turbines no later than 120 days after becoming subject to the subpart

45 C.S.R. 13, Permit R13-2064G
Condition 5.2.1 – At such reasonable times as the Secretary may designate, the permittee shall conduct Method 9 emission observations for the purpose of demonstrating compliance with Condition 5.1.13. Method 9 shall be conducted in accordance with 40 CFR 60 Appendix A.

Condition 5.2.2 –The permittee must perform annual performance tests in accordance with § 60.4400 to demonstrate continuous compliance. If the NO_X emission result from the performance test is less than or equal to 75% of the NO_X emission limit for the unit, the permittee may reduce the frequency of the subsequent performance test to once every 2 years (no more than 26 calendar months following the previous test). If the results of any subsequent test exceed 75% of the NO_X emission limit for the turbine,

the permittee must resume annual performance tests.

Condition 5.2.3 – The initial performance test shall be conducted within 60 days after achieving full load operation or within 180 days of startup whichever comes first

Condition 5.3.1 – In the event that the Secretary requests emission tests to be conducted to determine CO, NO_X, PM_{10}, SO_2, and VOC from emission points, the methods listed below form Appendix A of 40 CFR 60 shall be utilized for purposes of conducting performance tests unless the Secretary approves an alternative or equivalent method

Pollutant	*Method*
CO	10, 10A or 10B
NO_X	40 CFR 60 Subpart GG
Formaldehyde	18
SO_2	40 CFR 60 Subpart GG
VOC	25 or 25A

Condition 5.3.2 –The permittee must perform annual performance tests in accordance with § 60.4400 to demonstrate continuous compliance. If the NO_X emission result from the performance test is less than or equal to 75% of the NO_X emission limit for the unit, the permittee may reduce the frequency of the subsequent performance test to once every 2 years (no more than 26 calendar months following the previous test). If the results of any subsequent test exceed 75% of the NO_X emission limit for the turbine, the permittee must resume annual performance tests.

Condition 5.3.3 – The initial performance test shall be conducted within 60 days after achieving full load operation or within 180 days of startup whichever comes first

Condition 5.4.1 – To demonstrate compliance with section 5.1.5, the permittee shall maintain monthly operating hours at normal dry low NO_X (DLN) conditions, non-dry low NO_X (non-DLN) conditions and low ambient temperature conditions as well as the monthly number of startup and shutdown cycles. These monthly records will be used to calculate monthly emissions (ME) for each regulated pollutant (P_X) using the following equation;

ME P_X = DLN P_X * DLN hrs + non DLN P_X * non DLN hrs + LT P_X * LT hrs + SSP_X * SS cycles

Where: DLN P_X, non DLN P_X, LT P_X and SS P_X are the unit emission rates (lb/hr or lb/cycle) for pollutant X during normal DLN, non dry Low NO_X, low temperature, and startup/shutdown operation, respectively.

Condition 5.4.2 – To demonstrate compliance with Condition 5.1.4, the permittee shall utilize the monthly emission formula listed Condition 5.4.1 and keep records of operation

Condition 5.4.3 – To demonstrate compliance with section 5.1.6, the permittee shall maintain records of the amount of natural gas consumed. Said records shall be maintained on site for a period of five (5) years and shall be made available to the Director of the DAQ or his/her duly authorized representative upon request and shall be certified by a responsible official upon submittal

Condition 5.4.4 – The permittee shall maintain the fuel quality characteristics in a current, valid purchase contract, tariff sheet or transportation for the fuel, specifying that the maximum total sulfur content for natural gas use in the continental areas is 20 grains of sulfur or less per 100 scf, has potential sulfur emissions of less than 26 ng SO2/J (0.060 lb/mmBtu) heat input for continental areas.

Condition 5.5.3 – The permittee shall submit a written report of the results of testing required in Conditions 5.3.2 and 5.3.3 of this permit before the close of business on the 60th day following completion of such testing to the Director. Such report(s) shall include all records and readings taken during such testing as appropriate for the required report.

Are you in compliance with all applicable requirements for this emission unit? X Yes ___No

If no, complete the **Schedule of Compliance Form** as **ATTACHMENT F**.

ATTACHMENT E - Emission Unit Form

Emission Unit Description

Emission unit ID number:	**Emission unit name:**	**List any control devices associated with this emission unit:**
098G3	Reciprocating Engine/Generator	NA

Provide a description of the emission unit (type, method of operation, design parameters, etc.):
4-cycle lean burn.

Manufacturer:	**Model number:**	**Serial number:**
Waukesha	VGF-F18GL	NA
Construction date:	**Installation date:**	**Modification date(s):**
NA	2014	NA

Design Capacity (examples: furnaces - tons/hr, tanks - gallons):

440 hp

530 hp (as defined in R13-2064G)

Maximum Hourly Throughput:	**Maximum Annual Throughput:**	**Maximum Operating Schedule:**
NA	NA	500 hrs/yr

Fuel Usage Data **(fill out all applicable fields)**

Does this emission unit combust fuel? X Yes ___ No	**If yes, is it?** ___ Indirect Fired X Direct Fired
Maximum design heat input and/or maximum horsepower rating: 440 hp 530 hp (as defined in R13-2064G)	**Type and Btu/hr rating of burners:** 8,341 Btu/hp-hr

List the primary fuel type(s) and if applicable, the secondary fuel type(s). For each fuel type listed, provide the maximum hourly and annual fuel usage for each.
Natural Gas
3,598 scf/hr / 1,799,000 scf/yr

Describe each fuel expected to be used during the term of the permit.

Fuel Type	Max. Sulfur Content	Max. Ash Content	BTU Value
Natural Gas	Pipeline Quality		1,020 Btu/scf

Emissions Data		
Criteria Pollutants	Potential Emissions	
	PPH	TPY
Carbon Monoxide (CO)	See Appendix A	
Nitrogen Oxides (NO_X)		
Lead (Pb)		
Particulate Matter ($PM_{2.5}$)		
Particulate Matter (PM_{10})		
Total Particulate Matter (TSP)		
Sulfur Dioxide (SO_2)		
Volatile Organic Compounds (VOC)		
Hazardous Air Pollutants	Potential Emissions	
	PPH	TPY
	See Appendix A	
Regulated Pollutants other than Criteria and HAP	Potential Emissions	
	PPH	TPY

List the method(s) used to calculate the potential emissions (include dates of any stack tests conducted, versions of software used, source and dates of emission factors, etc.).

See Appendix A

Applicable Requirements

List all applicable requirements for this emission unit. For each applicable requirement, include the underlying rule/regulation citation and/or construction permit with the condition number. (*Note: Title V permit condition numbers alone are not the underlying applicable requirements*). If an emission limit is calculated based on the type of source and design capacity or if a standard is based on a design parameter, this information should also be included.

40 C.F.R. 60 Subpart JJJJ
40 C.F.R. § 60.4233(e), 60.4234, and Table 1 (Line 14) – Operating Requirements

40 C.F.R. § 60.4236(c) – Installation Requirements

40 C.F.R. § 60.4237(a) – Monitoring Requirements

40 C.F.R. § 60. 4243(b), (d), (e) and (g) – Compliance Requirements

40 C.F.R. § 60.4244 – Testing Requirements

40 C.F.R. § 60.4245(a) and (b) – Reporting Requirements

45 C.S.R. 13, Permit R13-2064G
Condition 7.1.1 – Quantity of natural gas that shall be consumed in the unit shall not exceed 4,334 scf/hr or 2.17 x 10^6 scf/yr.

Condition 7.1.2 – Maximum emissions from the unit shall not exceed the following limits;

Pollutant	*Maximum Hourly Emissions (lb/hr)*	*Maximum Annual Emissions (ton/yr)*
NO_X	2.34	0.58
CO	1.52	0.38
VOC	0.30	0.08
CH_2O	0.23	0.06

Condition 7.1.3 – Maximum yearly hours of operation for the unit shall not exceed 500 hours per year. Compliance with this limitation shall be determined using a twelve (12) month rolling total. A 12 month rolling total shall mean the sum of the hours of operation at any given time during the previous 12 consecutive calendar months.

Condition 8.1.1 – The provisions of this subpart are applicable to owners/operators of stationary SI ICE as specified below. For the purposes of this subpart, the date that construction commences is the date the engine is ordered by the owner; [40CFR§60.4230(a)]

a. Owners/operators of stationary SI ICE that commence construction after June 12, 2006, where the unit is manufactured on or after January 1, 2009 for emergency engines with a maximum engine power greater than 19 KW (25 hp)
b. Owners/operators of stationary SI ICE that commence modification or reconstruction after June 12, 2006.

Condition 8.1.2 – Provisions of this subpart are not applicable to unit being tested ay an engine test cell/stand [40CFR§60.4230(b)]

Condition 8.1.3 – Stationary SI ICE may be eligible for exemption from the requirements of this subpart as described in 40 CFR 1068, Subpart C (or the exemptions described in 40 CFR 90 and 1048 for engines that would need to be certified to standards in those parts), except that owners and operators, as well as manufacturers may be eligible to request an exemption for national security. [40CFR§60.4230(e)]

Condition 8.2.1 – Owner/operators of stationary SI ICE with a maximum engine power greater than or equal to 75 KW (100 hp) must comply with the emission standards in Table 1 to this subpart. [40CFR§60.4233(e)]

Condition 8.2.2 – Owners/operators of stationary SI ICE that are required to meet standards that reference 40 CFR 1048.101 must, if testing their engines in use, meet the standards in that section applicable to field testing, except as indicated in paragraph (e) of this section [40CFR§60.4233(h)]

Condition 8.2.3 – Owner/operators of stationary SI ICE must operate and maintain station SI ICE that achieve the emission standards as required in §60.4233 over the entire life of the engine [40CFR§60.4234]

X Permit Shield

For all applicable requirements listed above, provide monitoring/testing/recordkeeping/reporting which shall be used to demonstrate compliance. If the method is based on a permit or rule, include the condition number or citation. (Note: Each requirement listed above must have an associated method of demonstrating

compliance. If there is not already a required method in place, then a method must be proposed.)

40 C.F.R. 60 Subpart JJJJ
40 C.F.R. § 60.4233(e), 60.4234 and Table 1 (Line 14) – Unit shall comply with the emission standards set forth for NOx (2.0 g/hp-hr), CO (4.0 g/hp-hr) and VOC (1.0 g/hp-hr) for the entire life of the engine.

40 C.F.R. § 60.4237(a) – Install a non-resettable meter to monitor hours of operation.

40 C.F.R. § 60.4243(b) – Compliance;
- Permittee shall keep a maintenance plan for unit and a record of all maintenance conducted.
- Permittee shall also operate in a manner consistent with good air pollution control practice to minimize emissions.
- Permittee shall conduct an initial performance test and subsequent testing every 8,760 hours or three (3) years whichever comes first.

40 C.F.R. § 60.4243(d) – Compliance/Operation;
- There is no time limit to operation of unit during emergency situations
- Operation of unit shall be limited to a maximum of 100 hours per calendar year for any combination of maintenance & readiness testing, emergency demand response, periods of voltage or frequency deviations and select non-emergency operations.
- Non-emergency operations shall not exceed 50 hours per calendar year and are to be counted as part of the maximum 100 hours per calendar year operation limitation as described in the previous paragraph

40 C.F.R. § 60.4243(e) – Permittee may operate unit using propane as alternative fuel solely during emergency operations for maximum 100 hours per calendar year.

40 C.F.R. § 60.4243(g) – Permittee shall maintain and operate air to fuel ration controllers appropriately to minimize emissions.

40 C.F.R. § 60.4245(a) and (b) – Permittee shall keep records on maintenance conducted and hours of operation, both for emergency use and non-emergency use.

45 C.S.R. 13, Permit R13-2064G
Condition 7.2.1 – To demonstrate compliance with Conditions 7.1.1 – 7.1.3, the permittee shall maintain records of the hours of operation of the unit.

Condition 8.3.1 – Owner/operators of stationary SI ICE that comply with emissions standards specified in §60.4233 must demonstrate compliance by doing one of the following;
- Purchase an engine certified according to procedures specified in this subpart, for the same model year and demonstrating compliance according to one of the methods specified in paragraph (a) of this section 40CFR§60.4243(b)(1)]
- Purchase a non-certified engine and demonstrate compliance with the emission standards specified in §60.4233 and according to the requirements specified in §60.4244, as applicable, and according paragraphs (b)(2)(ii) of this section;
    - If you are the owner/operator of a stationary SI ICE greater than 500 hp, you shall keep a maintenance plan for unit and a record of all maintenance conducted, and must, to the extent practicable, maintain and operate in a manner consistent with good air pollution control practice to minimize emissions. In addition, permittee shall conduct an initial performance test and subsequent testing every 8,760 hours or three (3) years whichever comes first, thereafter to demonstrate compliance [40CFR§60.4243(b)(2)(ii)]

Condition 8.3.2 – Owner/operators of emergency stationary ICE must demonstrate compliance by showing operation of unit is conducted within the following parameters; [40CFR§60.4243(d)]
- There is no time limit to operation of unit during emergency situations
- Operation of unit shall be limited to a maximum of 100 hours per calendar year for any combination of maintenance & readiness testing, emergency demand response, periods of voltage or frequency deviations and select non-emergency operations.
- Non-emergency operations shall not exceed 50 hours per calendar year and are to be counted as part of the maximum 100 hours per calendar year operation limitation as described in the previous paragraph

Condition 8.3.3 – Permittee may operate unit using propane as alternative fuel solely during emergency operations for maximum 100 hours per calendar year. [40CFR§60.4243(e)]

Condition 8.4.1 – Owner/operators of stationary SI ICE who conduct performance tests must follow the procedures listed below;
- Each performance test must be conducted within 10 % of 100% peak (or highest achievable) load
- Performance tests may not be conducted during periods of startup, shutdown, or malfunction. If engine is non-operational, you must conduct the performance test immediately upon startup of the engine
- Conduct 3 separate test runs for each performance test. Each test run shall last at least 1 hour
- To determine compliance with the NO_X mass per unit output emission limitation, convert the concentration of NO_X in the engine exhaust using the following equation;

$$ER = \frac{C_d \times 1.912 \times 10^{-3} \times Q \times T}{HP - hr} \qquad (Eq. 1)$$

Where

ER = Emission rate of NO_X in g/HP-hr.

C_d = Measured NO_X concentration in parts per million by volume (ppmv).

1.912×10^{-3} = Conversion constant for ppm NO_X to grams per standard cubic meter at 20 degrees Celsius.

Q = Stack gas volumetric flow rate, in standard cubic meter per hour, dry basis.

T = Time of test run, in hours.

HP-hr = Brake work of the engine, horsepower-hour (HP-hr).

- To determine compliance with the CO mass per unit output emission limitation, convert the concentration of CO in the engine exhaust using the following equation;

$$ER = \frac{C_d \times 1.164 \times 10^{-3} \times Q \times T}{HP - hr} \qquad (Eq. 2)$$

Where

ER = Emission rate of CO in g/HP-hr.

C_d = Measured CO concentration in ppmv.

1.164×10^{-3} = Conversion constant for ppm CO to grams per standard cubic meter at 20 degrees Celsius.

Q = Stack gas volumetric flow rate, in standard cubic meters per hour, dry basis.

T = Time of test run, in hours.

HP-hr = Brake work of the engine, in HP-hr.

- For purposes of this subpart, when calculating emissions of VOC, emissions of formaldehyde should not be included. To determine compliance with the VOC mass per unit output emission limitation, convert the concentration of VOC in the engine exhaust using the following equation;

$$ER = \frac{C_d \times 1.833 \times 10^{-3} \times Q \times T}{HP - hr} \qquad (Eq. 3)$$

Where:

ER = Emission rate of VOC in g/HP-hr.

C_d = VOC concentration measured as propane in ppmv.

1.833×10^{-3} = Conversion constant for ppm VOC measured as propane, to grams per standard cubic meter at 20 degrees Celsius.

Q = Stack gas volumetric flow rate, in standard cubic meters per hour, dry basis.

T = Time of test run, in hours.

HP-hr = Brake work of the engine, in HP-hr.

- If the owner/operator chooses to measure VOC emissions using either Method 18 of 40 CFR part 60, appendix A, or Method 320 of 40 CFR part 63, appendix A, then it has the option of correcting the measured VOC emissions to account for the potential differences in measured values between these methods and Method 25A. The results from Method 18 and Method 320 can be corrected for response factor differences using Equations 4 and 5 of this section. The corrected VOC concentration can then be placed on a propane basis using Equation 6 of this section.

$$RF_i = \frac{C_{Mi}}{C_{Ai}} \qquad \text{(Eq. 4)}$$

Where:

RF_i = Response factor of compound i when measured with EPA Method 25A.

C_{Mi} = Measured concentration of compound i in ppmv as carbon.

C_{Ai} = True concentration of compound i in ppmv as carbon.

$$C_{icorr} = RF_i \times C_{imeas} \qquad \text{(Eq. 5)}$$

Where:

C_{icorr} = Concentration of compound i corrected to the value that would have been measured by EPA Method 25A, ppmv as carbon.

C_{imeas} = Concentration of compound i measured by EPA Method 320, ppmv as carbon.

$$C_{Peq} = 0.6098 \times C_{icorr} \qquad \text{(Eq. 6)}$$

Where:

C_{Peq} = Concentration of compound i in mg of propane equivalent per DSCM.

[40CFR§60.4244]

Condition 8.5.1 – Owners/operators of stationary SI ICE must meet the following notification, reporting and recordkeeping requirements;

a. Owner/operator shall keep the following records; [40CFR§60.4245(a)]
   - Notifications submitted to comply with the subpart and all documentation supporting any notification
   - Maintenance conducted on the engine
   - If the engine is certified, documentation that the engines meets the emission standards
   - If the engine in not certified, documentation that the engine is meeting the emissions standards

b. Permittee shall keep records for hours of operation, both for emergency use and non-emergency use. [40CFR§60.4245(b)]

c. Owner/operators of non-certified engines must submit an initial notification that includes the following information; [40CFR§60.4245(c)]
   - Name and address of the owner/operator
   - Address of affected source
   - Engine specific information
   - Emission control equipment
   - Fuel used

d. Submit performance test results within 60 days of the test completion [40CFR§60.4245(d)]

Condition 9.1.2 – ***Stationary RICE subject to Regulations Under 40 CFR Part 60*** – An affected source that meets any of the criteria in paragraphs (c)(1) through (7) of 40 CFR 63.6590 must meet the requirements of Subpart ZZZZ by meeting the requirements of 40 CFR 60, Subpart JJJJ. No further requirements apply for such engines under this part.

The permittee meets the criteria of paragraph (c)(1), which is for a new or reconstructed stationary RICE located at an area source. The permittee must meet the requirements of this part by meeting the requirements of 40 CFR 60 Subpart JJJJ.

Are you in compliance with all applicable requirements for this emission unit? X Yes ___No

If no, complete the **Schedule of Compliance Form** as **ATTACHMENT F**.

ATTACHMENT E - Emission Unit Form

Emission Unit Description

Emission unit ID number:	**Emission unit name:**	**List any control devices associated with this emission unit:**
BLR1	Heating System Boiler #1	NA

Provide a description of the emission unit (type, method of operation, design parameters, etc.):

Heating System Boiler

Manufacturer:	**Model number:**	**Serial number:**
American Standard	1 BN-J-3	NA
Construction date:	**Installation date:**	**Modification date(s):**
NA	1963	NA

Design Capacity (examples: furnaces - tons/hr, tanks - gallons):

2.284 mmBtu/hr

3.40 mmBtu/hr (as defined in R13-2064G)

Maximum Hourly Throughput:	**Maximum Annual Throughput:**	**Maximum Operating Schedule:**
NA	NA	8,760

***Fuel Usage Data* (fill out all applicable fields)**

Does this emission unit combust fuel? X Yes ___ No	**If yes, is it?** X Indirect Fired ___ Direct Fired
Maximum design heat input and/or maximum horsepower rating: 2.284 mmBtu/hr 3.40 mmBtu/hr (as defined in R13-2064G)	**Type and Btu/hr rating of burners:** 2.284 mmBtu/hr 3.40 mmBtu/hr (as defined in R13-2064G)

List the primary fuel type(s) and if applicable, the secondary fuel type(s). For each fuel type listed, provide the maximum hourly and annual fuel usage for each.

Natural Gas

2,239.7 scf/hr / 19,620,000 scf/yr

Describe each fuel expected to be used during the term of the permit.

Fuel Type	Max. Sulfur Content	Max. Ash Content	BTU Value
Natural Gas	Pipeline Quality		1,020 Btu/scf

Emissions Data		
Criteria Pollutants	Potential Emissions	
	PPH	TPY
Carbon Monoxide (CO)	See Appendix A	
Nitrogen Oxides (NO_X)		
Lead (Pb)		
Particulate Matter ($PM_{2.5}$)		
Particulate Matter (PM_{10})		
Total Particulate Matter (TSP)		
Sulfur Dioxide (SO_2)		
Volatile Organic Compounds (VOC)		
Hazardous Air Pollutants	Potential Emissions	
	PPH	TPY
	See Appendix A	
Regulated Pollutants other than Criteria and HAP	Potential Emissions	
	PPH	TPY

List the method(s) used to calculate the potential emissions (include dates of any stack tests conducted, versions of software used, source and dates of emission factors, etc.).

See Appendix A

Applicable Requirements

List all applicable requirements for this emission unit. For each applicable requirement, include the underlying rule/regulation citation and/or construction permit with the condition number. (*Note: Title V permit condition numbers alone are not the underlying applicable requirements*). If an emission limit is calculated based on the type of source and design capacity or if a standard is based on a design parameter, this information should also be included.

45 CSR§2-3.1. – Opacity Limit; shall not exceed ten (10) percent opacity

45 C.S.R. 13, Permit R13-2064G
Condition 6.1.1 – The MDHI of the unit shall not exceed 3.4 mmBtu/hr

Condition 6.1.2 – No person shall cause, allow or permit emission of smoke and/or PM into open air from any fuel burning unit which is greater than ten (10) percent opacity based on a six minute block average

X Permit Shield

For all applicable requirements listed above, provide monitoring/testing/recordkeeping/reporting which shall be used to demonstrate compliance. If the method is based on a permit or rule, include the condition number or citation. (Note: Each requirement listed above must have an associated method of demonstrating compliance. If there is not already a required method in place, then a method must be proposed.)

45 CSR§2-3.2 – Compliance shall be determined using Method 9

45 C.S.R. 13, Permit R13-2064G
Condition 6.2.1 – At such reasonable times as the Secretary may designate, the permittee shall conduct Method 9 emission observations for the purpose of demonstrating compliance with Condition 6.1.2. Method 9 shall be conducted in accordance with 40 CFR 60 Appendix A

Condition 6.3.1 – Compliance with the VE requirements of Condition 6.1.2 shall be determined in accordance with 40 CFR 60 Appendix A, Method 9 or by using measurements from continuous opacity monitoring systems approved by the Director.

Condition 6.4.1 – The permittee shall maintain records of all monitoring data required by Condition 6.1.2 documenting the date and time of each VE check, the emission point or equipment/source identification number, the name or means of identification of the observer, the results of the checks(s), whether the VE's are normal for the process, and, if applicable, all corrective measures taken or planned. The permittee shall also record the general weather conditions during VE check(s). Should a VE observation be required to be performed per the requirements specified in Method 9, the data records of each observation shall be maintained per the requirements of Method 9.

Are you in compliance with all applicable requirements for this emission unit? X Yes ___No

If no, complete the **Schedule of Compliance Form** as **ATTACHMENT F**.

ATTACHMENT E - Emission Unit Form

Emission Unit Description

Emission unit ID number:	**Emission unit name:**	**List any control devices associated with this emission unit:**
HTR1	Line Heater	NA

Provide a description of the emission unit (type, method of operation, design parameters, etc.):

Line Heater

Manufacturer:	**Model number:**	**Serial number:**
BS&B	J-92-02	NA
Construction date:	**Installation date:**	**Modification date(s):**
NA	1970	NA

Design Capacity (examples: furnaces - tons/hr, tanks - gallons): 0.25 mmBtu/hr

Maximum Hourly Throughput:	**Maximum Annual Throughput:**	**Maximum Operating Schedule:**
NA	NA	8,760

Fuel Usage Data **(fill out all applicable fields)**

Does this emission unit combust fuel? X Yes ___ No	**If yes, is it?** X Indirect Fired ___ Direct Fired
Maximum design heat input and/or maximum horsepower rating: 0.25 mmBtu/hr	**Type and Btu/hr rating of burners:** 0.25 mmBtu/hr

List the primary fuel type(s) and if applicable, the secondary fuel type(s). For each fuel type listed, provide the maximum hourly and annual fuel usage for each.

Natural Gas
245.4 scf/hr / 2,150,000 scf/yr

Describe each fuel expected to be used during the term of the permit.

Fuel Type	Max. Sulfur Content	Max. Ash Content	BTU Value
Natural Gas	Pipeline Quality		1,020 Btu/scf

Emissions Data		
Criteria Pollutants	Potential Emissions	
	PPH	TPY
Carbon Monoxide (CO)	See Appendix A	
Nitrogen Oxides (NO_X)		
Lead (Pb)		
Particulate Matter ($PM_{2.5}$)		
Particulate Matter (PM_{10})		
Total Particulate Matter (TSP)		
Sulfur Dioxide (SO_2)		
Volatile Organic Compounds (VOC)		
Hazardous Air Pollutants	Potential Emissions	
	PPH	TPY
	See Appendix A	
Regulated Pollutants other than Criteria and HAP	Potential Emissions	
	PPH	TPY

List the method(s) used to calculate the potential emissions (include dates of any stack tests conducted, versions of software used, source and dates of emission factors, etc.).

See Appendix A

Applicable Requirements

List all applicable requirements for this emission unit. For each applicable requirement, include the underlying rule/regulation citation and/or construction permit with the condition number. (*Note: Title V permit condition numbers alone are not the underlying applicable requirements*). If an emission limit is calculated based on the type of source and design capacity or if a standard is based on a design parameter, this information should also be included.

45 CSR§2-3.1. – Opacity Limit; shall not exceed ten (10) percent opacity

45 C.S.R. 13, Permit R13-2064G
Condition 6.1.1 – The MDHI of the unit shall not exceed 0.25 mmBtu/hr

Condition 6.1.2 – No person shall cause, allow or permit emission of smoke and/or PM into open air from any fuel burning unit which is greater than ten (10) percent opacity based on a six minute block average

X Permit Shield

For all applicable requirements listed above, provide monitoring/testing/recordkeeping/reporting which shall be used to demonstrate compliance. If the method is based on a permit or rule, include the condition number or citation. (Note: Each requirement listed above must have an associated method of demonstrating compliance. If there is not already a required method in place, then a method must be proposed.)

45 CSR§2-3.2 – Compliance shall be determined using Method 9

45 C.S.R. 13, Permit R13-2064G
Condition 6.2.1 – At such reasonable times as the Secretary may designate, the permittee shall conduct Method 9 emission observations for the purpose of demonstrating compliance with Condition 6.1.2. Method 9 shall be conducted in accordance with 40 CFR 60 Appendix A

Condition 6.3.1 – Compliance with the VE requirements of Condition 6.1.2 shall be determined in accordance with 40 CFR 60 Appendix A, Method 9 or by using measurements from continuous opacity monitoring systems approved by the Director.

Condition 6.4.1 – The permittee shall maintain records of all monitoring data required by Condition 6.1.2 documenting the date and time of each VE check, the emission point or equipment/source identification number, the name or means of identification of the observer, the results of the checks(s), whether the VE's are normal for the process, and, if applicable, all corrective measures taken or planned. The permittee shall also record the general weather conditions during VE check(s). Should a VE observation be required to be performed per the requirements specified in Method 9, the data records of each observation shall be maintained per the requirements of Method 9.

Are you in compliance with all applicable requirements for this emission unit? X Yes ___No

If no, complete the **Schedule of Compliance Form** as **ATTACHMENT F**.

ATTACHMENT E - Emission Unit Form

Emission Unit Description

Emission unit ID number:	**Emission unit name:**	**List any control devices associated with this emission unit:**
HTR2	Line Heater	NA

Provide a description of the emission unit (type, method of operation, design parameters, etc.):

Line Heater

Manufacturer:	**Model number:**	**Serial number:**
Total Energy Resources Inc	FAH18-6	NA
Construction date:	**Installation date:**	**Modification date(s):**
NA	1999	NA

Design Capacity (examples: furnaces - tons/hr, tanks - gallons): 0.50 mmBtu/hr

Maximum Hourly Throughput:	**Maximum Annual Throughput:**	**Maximum Operating Schedule:**
NA	NA	8,760

Fuel Usage Data **(fill out all applicable fields)**

Does this emission unit combust fuel? X Yes ___ No	**If yes, is it?** X Indirect Fired ___ Direct Fired
Maximum design heat input and/or maximum horsepower rating: 0.50 mmBtu/hr	**Type and Btu/hr rating of burners:** 0.50 mmBtu/hr

List the primary fuel type(s) and if applicable, the secondary fuel type(s). For each fuel type listed, provide the maximum hourly and annual fuel usage for each.

Natural Gas
489.7 scf/hr / 4,290,000 scf/yr

Describe each fuel expected to be used during the term of the permit.

Fuel Type	Max. Sulfur Content	Max. Ash Content	BTU Value
Natural Gas	Pipeline Quality		1,020 Btu/scf

Emissions Data		
Criteria Pollutants	Potential Emissions	
	PPH	TPY
Carbon Monoxide (CO)	See Appendix A	
Nitrogen Oxides (NO_X)		
Lead (Pb)		
Particulate Matter ($PM_{2.5}$)		
Particulate Matter (PM_{10})		
Total Particulate Matter (TSP)		
Sulfur Dioxide (SO_2)		
Volatile Organic Compounds (VOC)		
Hazardous Air Pollutants	Potential Emissions	
	PPH	TPY
	See Appendix A	
Regulated Pollutants other than Criteria and HAP	Potential Emissions	
	PPH	TPY

List the method(s) used to calculate the potential emissions (include dates of any stack tests conducted, versions of software used, source and dates of emission factors, etc.).

See Appendix A

Applicable Requirements

List all applicable requirements for this emission unit. For each applicable requirement, include the underlying rule/regulation citation and/or construction permit with the condition number. (*Note: Title V permit condition numbers alone are not the underlying applicable requirements*). If an emission limit is calculated based on the type of source and design capacity or if a standard is based on a design parameter, this information should also be included.

45 CSR§2-3.1. – Opacity Limit; shall not exceed ten (10) percent opacity

45 C.S.R. 13, Permit R13-2064G
Condition 6.1.1 – The MDHI of the unit shall not exceed 0.50 mmBtu/hr

Condition 6.1.2 – No person shall cause, allow or permit emission of smoke and/or PM into open air from any fuel burning unit which is greater than ten (10) percent opacity based on a six minute block average

X Permit Shield

For all applicable requirements listed above, provide monitoring/testing/recordkeeping/reporting which shall be used to demonstrate compliance. If the method is based on a permit or rule, include the condition number or citation. (Note: Each requirement listed above must have an associated method of demonstrating compliance. If there is not already a required method in place, then a method must be proposed.)

45 CSR§2-3.2 – Compliance shall be determined using Method 9

45 C.S.R. 13, Permit R13-2064G
Condition 6.2.1 – At such reasonable times as the Secretary may designate, the permittee shall conduct Method 9 emission observations for the purpose of demonstrating compliance with Condition 6.1.2. Method 9 shall be conducted in accordance with 40 CFR 60 Appendix A

Condition 6.3.1 – Compliance with the VE requirements of Condition 6.1.2 shall be determined in accordance with 40 CFR 60 Appendix A, Method 9 or by using measurements from continuous opacity monitoring systems approved by the Director.

Condition 6.4.1 – The permittee shall maintain records of all monitoring data required by Condition 6.1.2 documenting the date and time of each VE check, the emission point or equipment/source identification number, the name or means of identification of the observer, the results of the checks(s), whether the VE's are normal for the process, and, if applicable, all corrective measures taken or planned. The permittee shall also record the general weather conditions during VE check(s). Should a VE observation be required to be performed per the requirements specified in Method 9, the data records of each observation shall be maintained per the requirements of Method 9.

Are you in compliance with all applicable requirements for this emission unit? X Yes ___No

If no, complete the **Schedule of Compliance Form** as **ATTACHMENT F**.

ATTACHMENT E - Emission Unit Form

Emission Unit Description

Emission unit ID number:	**Emission unit name:**	**List any control devices associated with this emission unit:**
HTR3	Heater #3	NA

Provide a description of the emission unit (type, method of operation, design parameters, etc.):

Warehouse Furnace/Heater

Manufacturer:	**Model number:**	**Serial number:**
UK	NA	NA
Construction date:	**Installation date:**	**Modification date(s):**
NA	2014	NA

Design Capacity (examples: furnaces - tons/hr, tanks - gallons): 0.30 mmBtu/hr

Maximum Hourly Throughput:	**Maximum Annual Throughput:**	**Maximum Operating Schedule:**
NA	NA	8,760

Fuel Usage Data **(fill out all applicable fields)**

Does this emission unit combust fuel? X Yes ___ No	**If yes, is it?** X Indirect Fired ___ Direct Fired
Maximum design heat input and/or maximum horsepower rating: 0.30 mmBtu/hr	**Type and Btu/hr rating of burners:** 0.30 mmBtu/hr

List the primary fuel type(s) and if applicable, the secondary fuel type(s). For each fuel type listed, provide the maximum hourly and annual fuel usage for each.

Natural Gas
294.5 scf/hr / 2,580,000 scf/yr

Describe each fuel expected to be used during the term of the permit.

Fuel Type	Max. Sulfur Content	Max. Ash Content	BTU Value
Natural Gas	Pipeline Quality		1,020 Btu/scf

Emissions Data		
Criteria Pollutants	Potential Emissions	
	PPH	TPY
Carbon Monoxide (CO)	See Appendix A	
Nitrogen Oxides (NO_X)		
Lead (Pb)		
Particulate Matter ($PM_{2.5}$)		
Particulate Matter (PM_{10})		
Total Particulate Matter (TSP)		
Sulfur Dioxide (SO_2)		
Volatile Organic Compounds (VOC)		
Hazardous Air Pollutants	Potential Emissions	
	PPH	TPY
	See Appendix A	
Regulated Pollutants other than Criteria and HAP	Potential Emissions	
	PPH	TPY

List the method(s) used to calculate the potential emissions (include dates of any stack tests conducted, versions of software used, source and dates of emission factors, etc.).

See Appendix A

Applicable Requirements

List all applicable requirements for this emission unit. For each applicable requirement, include the underlying rule/regulation citation and/or construction permit with the condition number. (*Note: Title V permit condition numbers alone are not the underlying applicable requirements*). If an emission limit is calculated based on the type of source and design capacity or if a standard is based on a design parameter, this information should also be included.

45 CSR§2-3.1. – Opacity Limit; shall not exceed ten (10) percent opacity

45 C.S.R. 13, Permit R13-2064G
Condition 6.1.1 – The MDHI of the unit shall not exceed 0.30 mmBtu/hr

Condition 6.1.2 – No person shall cause, allow or permit emission of smoke and/or PM into open air from any fuel burning unit which is greater than ten (10) percent opacity based on a six minute block average

X Permit Shield

For all applicable requirements listed above, provide monitoring/testing/recordkeeping/reporting which shall be used to demonstrate compliance. If the method is based on a permit or rule, include the condition number or citation. (Note: Each requirement listed above must have an associated method of demonstrating compliance. If there is not already a required method in place, then a method must be proposed.)

45 CSR§2-3.2 – Compliance shall be determined using Method 9

45 C.S.R. 13, Permit R13-2064G
Condition 6.2.1 – At such reasonable times as the Secretary may designate, the permittee shall conduct Method 9 emission observations for the purpose of demonstrating compliance with Condition 6.1.2. Method 9 shall be conducted in accordance with 40 CFR 60 Appendix A

Condition 6.3.1 – Compliance with the VE requirements of Condition 6.1.2 shall be determined in accordance with 40 CFR 60 Appendix A, Method 9 or by using measurements from continuous opacity monitoring systems approved by the Director.

Condition 6.4.1 – The permittee shall maintain records of all monitoring data required by Condition 6.1.2 documenting the date and time of each VE check, the emission point or equipment/source identification number, the name or means of identification of the observer, the results of the checks(s), whether the VE's are normal for the process, and, if applicable, all corrective measures taken or planned. The permittee shall also record the general weather conditions during VE check(s). Should a VE observation be required to be performed per the requirements specified in Method 9, the data records of each observation shall be maintained per the requirements of Method 9.

Are you in compliance with all applicable requirements for this emission unit? X Yes ___No

If no, complete the **Schedule of Compliance Form** as **ATTACHMENT F**.

ATTACHMENT F

SCHEDULE OF COMPLIANCE FORM (NOT APPLICABLE)

Title V Operating Permit Renewal Application

Smithfield Compressor Station, Facility ID No. 103-00010
Smithfield, West Virginia

Columbia Gas Transmission, LLC
1700 MacCorkle Avenue, SE
Charleston, West Virginia

April 2017

ATTACHMENT G

AIR POLLUTION CONTROL DEVICE FORM (NOT APPLICABLE)

Title V Operating Permit Renewal Application

Smithfield Compressor Station, Facility ID No. 103-00010
Smithfield, West Virginia

Columbia Gas Transmission, LLC
1700 MacCorkle Avenue, SE
Charleston, West Virginia

April 2017

ATTACHMENT H

COMPLIANCE ASSURANCE MONITORING FORM (NOT APPLICABLE)

Title V Operating Permit Renewal Application

Smithfield Compressor Station, Facility ID No. 103-00010
Smithfield, West Virginia

Columbia Gas Transmission, LLC
1700 MacCorkle Avenue, SE
Charleston, West Virginia

April 2017

APPENDIX A

SUPPORTING CALCULATIONS

Title V Operating Permit Renewal Application

Smithfield Compressor Station, Facility ID No. 103-00010
Smithfield, West Virginia

Columbia Gas Transmission, LLC
1700 MacCorkle Avenue, SE
Charleston, West Virginia

April 2017

Table 1. Annual Potential To Emit (PTE) Summary
Columbia Gas Transmission - Smithfield Compressor Station

Criteria Pollutants

Proposed PTE - Criteria Pollutants

Source	PM	PM10	PM2.5	SO2	NOx	CO	VOC	CO2e
Engines (ton/yr)	4.143	4.143	4.143	12.350	551.601	100.619	17.020	65922.069
Heaters/Boilers/Reboilers (ton/yr)	0.109	0.109	0.109	0.010	1.432	1.203	0.079	1708.686
Storage Tanks (ton/yr)	-	-	-	-	-	-	0.784	-
Fugitives (ton/yr)	-	-	-	-	-	-	5.049	117.380
Blowdown Venting (ton/yr)	-	-	-	-	-	-	2.281	1463.779
Total Emissions (ton/yr)	4.252	4.252	4.252	12.360	553.033	101.822	25.212	69211.914
Total Emissions (lb/hr)	0.971	0.971	0.971	2.822	126.263	23.247	5.756	15801.807

Hazardous Air Pollutants (HAPs)

Proposed PTE - HAPs

Source	Acetaldehyde	Benzene	Toluene	Ethylbenzene	Xylene	n-Hexane	Formaldehyde	Total HAPs
Engines (ton/yr)	1.0688	0.0606	0.1082	0.0190	0.0511	0.1396	6.950	9.732
Heaters/Boilers/Reboilers (ton/yr)	-	0.0000	0.0000	-	-	0.0258	0.001	0.027
Storage Tanks (ton/yr)	-	-	-	-	-	-	-	0.000
Fugitives (ton/yr)	-	-	-	-	-	-	-	0.000
Blowdown Venting (ton/yr)	-	-	-	-	-	-	-	0.000
Total Emissions (ton/yr)	1.069	0.061	0.108	0.019	0.051	0.165	6.951	9.759
Total Emissions (lb/hr)	0.244	0.014	0.025	0.004	0.012	0.038	1.587	2.228

Table 2. Reciprocating Engine / Integral Compressor Emissions (E01-E02)
Ingersoll Rand 410 KVGB; 4SLB
Columbia Gas Transmission - Smithfield Compressor Station

Pollutant	Maximum Hourly Emissions					Annual Emissions				
	Emission Factor			PTE per Engine (lb/hr)		Emission Factor			PTE per Engine (tons/yr)	
Criteria Pollutants										
PM/PM10/PM2.5	9.98E-03	lb/MMBtu	(1)	0.16	(a)	9.98E-03	lb/MMBtu	(1)	0.62	(c)
SO_2	20.0 grains S / 100 ft^3		(2)	0.88	(e)	0.25 grains S / 100 ft^3		(2)	0.04	(f)
NOx	4.08E+00	lb/MMBtu	(1)	63.95	(a)	4.08E+00	lb/MMBtu	(1)	254.65	(c)
CO	3.17E-01	lb/MMBtu	(1)	4.97	(a)	3.17E-01	lb/MMBtu	(1)	19.79	(c)
VOC	1.18E-01	lb/MMBtu	(1)	1.85	(a)	1.18E-01	lb/MMBtu	(1)	7.36	(c)
Hazardous Air Pollutants										
1,1,2,2-Tetrachloroethane	4.00E-05	lb/MMBtu	(1)	0.001	(a)	4.00E-05	lb/MMBtu	(1)	0.002	(c)
1,1,2-Trichloroethane	3.18E-05	lb/MMBtu	(1)	0.000	(a)	3.18E-05	lb/MMBtu	(1)	0.002	(c)
1,3-Butadiene	2.67E-04	lb/MMBtu	(1)	0.004	(a)	2.67E-04	lb/MMBtu	(1)	0.017	(c)
1,3-Dichloropropene	2.64E-05	lb/MMBtu	(1)	0.000	(a)	2.64E-05	lb/MMBtu	(1)	0.002	(c)
2-Methylnapthalene	3.32E-05	lb/MMBtu	(1)	0.001	(a)	3.32E-05	lb/MMBtu	(1)	0.002	(c)
2,2,4-Trimethylpentane	2.50E-05	lb/MMBtu	(1)	0.000	(a)	2.50E-05	lb/MMBtu	(1)	0.002	(c)
Acetaldehyde	8.36E-03	lb/MMBtu	(1)	0.131	(a)	8.36E-03	lb/MMBtu	(1)	0.522	(c)
Acrolein	5.14E-03	lb/MMBtu	(1)	0.081	(a)	5.14E-03	lb/MMBtu	(1)	0.321	(c)
Benzene	4.40E-04	lb/MMBtu	(1)	0.007	(a)	4.40E-04	lb/MMBtu	(1)	0.027	(c)
Biphenyl	2.12E-03	lb/MMBtu	(1)	0.033	(a)	2.12E-03	lb/MMBtu	(1)	0.132	(c)
Carbon Tetrachloride	3.67E-05	lb/MMBtu	(1)	0.001	(a)	3.67E-05	lb/MMBtu	(1)	0.002	(c)
Chlorobenzene	3.04E-05	lb/MMBtu	(1)	0.000	(a)	3.04E-05	lb/MMBtu	(1)	0.002	(c)
Chloroform	2.85E-05	lb/MMBtu	(1)	0.000	(a)	2.85E-05	lb/MMBtu	(1)	0.002	(c)
Ethylbenzene	3.97E-05	lb/MMBtu	(1)	0.001	(a)	3.97E-05	lb/MMBtu	(1)	0.002	(c)
Ethylene Dibromide	4.43E-05	lb/MMBtu	(1)	0.001	(a)	4.43E-05	lb/MMBtu	(1)	0.003	(c)
Formaldehyde	5.28E-02	lb/MMBtu	(1)	0.828	(a)	5.28E-02	lb/MMBtu	(1)	3.296	(c)
Methanol	2.50E-03	lb/MMBtu	(1)	0.039	(a)	2.50E-03	lb/MMBtu	(1)	0.156	(c)
Methylene Chloride	2.00E-05	lb/MMBtu	(1)	0.000	(a)	2.00E-05	lb/MMBtu	(1)	0.001	(c)
n-Hexane	1.11E-03	lb/MMBtu	(1)	0.017	(a)	1.11E-03	lb/MMBtu	(1)	0.069	(c)
Naphthalene	7.44E-05	lb/MMBtu	(1)	0.001	(a)	7.44E-05	lb/MMBtu	(1)	0.005	(c)
PAH (POM)	2.69E-05	lb/MMBtu	(1)	0.000	(a)	2.69E-05	lb/MMBtu	(1)	0.002	(c)
Phenol	1.04E-05	lb/MMBtu	(1)	0.000	(a)	1.04E-05	lb/MMBtu	(1)	0.001	(c)
Styrene	2.36E-05	lb/MMBtu	(1)	0.000	(a)	2.36E-05	lb/MMBtu	(1)	0.001	(c)
Toluene	4.08E-04	lb/MMBtu	(1)	0.006	(a)	4.08E-04	lb/MMBtu	(1)	0.025	(c)
Vinyl Chloride	1.49E-05	lb/MMBtu	(1)	0.000	(a)	1.49E-05	lb/MMBtu	(1)	0.001	(c)
Xylenes	1.84E-04	lb/MMBtu	(1)	0.003	(a)	1.84E-04	lb/MMBtu	(1)	0.011	(c)
Total HAP				**1.157**					**4.608**	
Greenhouse Gas Emissions										
CO_2	116.89	lb/MMBtu	(4)	1832.24	(a)	116.89	lb/MMBtu	(4)	7295.63	(c)
CH_4	2.2E-03	lb/MMBtu	(4)	0.03	(a)	2.2E-03	lb/MMBtu	(4)	0.14	(c)
N_2O	2.2E-04	lb/MMBtu	(4)	0.00	(a)	2.2E-04	lb/MMBtu	(4)	0.01	(c)
CO_2e (g)	-	-		1834.13					7303.17	

Calculations:

Maximum Hourly Emissions - If emission factor note 1 or 4 is used, use calculation (a). If emission factor note 3 is used, use calculation (b).

(a) Maximum Hourly Emissions (lb/hr) = Emission factor (lb/MMBtu) * (1MMBtu/1000000 Btu) * Engine Power Output (hp) * Average BSFC (Btu/hp-hr)

(b) Maximum Hourly Emissions (lb/hr) = Emission factor (lb/hp-hr) * Engine Power Output (hp)

Annual Emissions - If emission factor note 1 or 4 is used, use calculation (c). If emission factor note 3 is used, use calculation (d).

(c) Annual emissions (tons/yr) = Emission factor (lb/MMBtu) * (1MMBtu/1000000Btu) * Engine Power Output (hp) * Average BSFC (Btu/hp-hr) * Annual Hours of operation (hr/yr) * (1ton/2000lbs)

(d) Annual emissions (tons/yr) = Emission factor (lb/hp-hr) * Engine Power Output (hp) * Annual Hours of operation (hr/yr) * (1ton/2000lbs)

SO_2 Emissions - If emission factor note 2 is used, use calculations (e) and (f) for hourly and annual emissions, respectively.

(e) Maximum Hourly Emissions SO2 Caclulation (lb/hr) = (20 grain S/100ft3) * Fuel throughput (ft3/hr) * (1lb/7000 grains) * (lbmol S/32.06 lb S) * (lbmol SO2/ lbmol S) *(64.07 lb SO2/lbmol SO2)

(f) Annual Emissions SO2 Caclulation (ton/yr) = (0.25 grain S/100ft3) * Fuel throughput (ft3/hr) * (1lb/7000 grains) * (lbmol S/32.06 lb S) * (lbmol SO2/ lbmol S) *(64.07 lb SO2/lbmol SO2) * Annual hours of operation (hr/yr) * (1ton/2000lbs)

MAXIMUM HOURLY EMISSION INPUTS		
Engine Power Output (kW) =	1230	
Engine Power Output (hp) =	1,650	
Number of Engines =	2	
Average BSFC (BTU/HP-hr) =	9,500	(5)
Heat Content Natural Gas(Btu/scf) =	1,020.0	(6)
Fuel Throughput (ft3/hr) =	15,367.6	(7)
PTE Hours of Operation =	1	

ANNUAL EMISSION INPUTS		
Engine Power Output (kW) =	1119	
Engine Power Output (hp) =	1,500	
Number of Engines =	2	
Average BSFC (BTU/HP-hr) =	9,500	(5)
Heat Content Natural Gas(Btu/scf) =	1,020.0	(6)
Fuel Throughput (ft3/hr) =	13,970.6	(7)
PTE Hours of Operation =	8,760	

(g) CO_2 equivalent = [(CO_2 emissions)*(GWP_{CO2})]+[(CH_4 emissions)*(GWP_{CH4})]+[(N_2O emissions)*(GWP_{N2O})]
Global Warming Potential (GWP)

CO_2	1	(8)
CH_4	25	(8)
N_2O	298	(8)

Notes:

(1) AP-42, Chapter 3.2, Table 3.2-2. *Natural Gas-fired Reciprocating Engines* (7/00). Uncontrolled Emission Factors for 4-Stroke Lean-Burn Engines.

(2) AP-42, Chapter 5.3, Section 5.3.1

(3) Emission factors derived from Stack Test data

(4) Emission factors are from 40 CFR 98, Subpart C, Table C-1 and C-2.

(5) Fuel consumption from manufacturer's specification sheet.

(6) Value obtained from AP-42, Chapter 3.2, Table 3.2-1, footnote b

(7) Fuel throughput = BSFC (BTU/HP-hr) x Power (HP) / Heat Content (BTU/scf)

(8) Global Warming Potentials obtained from 40 CFR 98, Subpart A, Table A-1

Table 3. Turbine Engine / Centrifugal Compressor Emissions (E05)
Solar; Taurus 60-T7302S
Columbia Gas Transmission - Smithfield Compressor Station

Pollutant	Maximum Hourly Emissions					Annual Emissions				
	Emission Factor			PTE per Engine (lb/hr)		Emission Factor			PTE per Engine (tons/yr)	
Criteria Pollutants										
PM/PM10/PM2.5	6.60E-03	lb/MMBtu	(1)	0.40	(a)	6.60E-03	lb/MMBtu	(1)	1.56	(c)
SO_2	20.0 grains S / 100 ft^3		(2)	3.39	(e)	0.25 grains S / 100 ft^3		(2)	0.17	(f)
NOx	7.97E-04	lb/hp-hr	(5)	6.04	(b)	7.97E-04	lb/hp-hr	(5)	23.51	(d)
CO	9.71E-04	lb/hp-hr	(5)	7.36	(b)	9.71E-04	lb/hp-hr	(5)	28.65	(d)
VOC	2.86E-05	lb/hp-hr	(5)	0.22	(b)	2.86E-05	lb/hp-hr	(5)	0.84	(d)
Hazardous Air Pollutants										
1,3-Butadiene	4.30E-07	lb/MMBtu	(6)	0.000	(a)	4.30E-07	lb/MMBtu	(6)	0.000	(c)
Acetaldehyde	4.00E-05	lb/MMBtu	(6)	0.002	(a)	4.00E-05	lb/MMBtu	(6)	0.009	(c)
Acrolein	6.40E-06	lb/MMBtu	(6)	0.000	(a)	6.40E-06	lb/MMBtu	(6)	0.002	(c)
Benzene	1.20E-05	lb/MMBtu	(6)	0.001	(a)	1.20E-05	lb/MMBtu	(6)	0.003	(c)
Ethylbenzene	3.20E-05	lb/MMBtu	(6)	0.002	(a)	3.20E-05	lb/MMBtu	(6)	0.008	(c)
Formaldehyde	7.10E-04	lb/MMBtu	(6)	0.043	(a)	7.10E-04	lb/MMBtu	(6)	0.168	(c)
Naphthalene	1.30E-06	lb/MMBtu	(6)	0.000	(a)	1.30E-06	lb/MMBtu	(6)	0.000	(c)
PAH (POM)	2.20E-06	lb/MMBtu	(6)	0.000	(a)	2.20E-06	lb/MMBtu	(6)	0.001	(c)
Phenol	2.90E-05	lb/MMBtu	(6)	0.002	(a)	2.90E-05	lb/MMBtu	(6)	0.007	(c)
Toluene	1.30E-04	lb/MMBtu	(6)	0.008	(a)	1.30E-04	lb/MMBtu	(6)	0.031	(c)
Xylenes	6.40E-05	lb/MMBtu	(6)	0.004	(a)	6.40E-05	lb/MMBtu	(6)	0.015	(c)
Total HAP				**0.062**					**0.242**	
Greenhouse Gas Emissions										
CO_2	116.89	lb/MMBtu	(7)	7088.15	(a)	116.89	lb/MMBtu	(7)	27589.27	(c)
CH_4	2.2E-03	lb/MMBtu	(7)	0.13	(a)	2.2E-03	lb/MMBtu	(7)	0.52	(c)
N_2O	2.2E-04	lb/MMBtu	(7)	0.01	(a)	2.2E-04	lb/MMBtu	(7)	0.05	(c)
$CO_2e^{(g)}$	-	-		7095.48					27617.78	

Calculations:

Maximum Hourly Emissions - If emission factor note 1, 4 or 5 is used, use calculation (a). If emission factor note 3 is used, use calculation (b).

(a) Maximum Hourly Emissions (lb/hr) = Emission factor (lb/MMBtu) * (1MMBtu/1000000 Btu) * Engine Power Output (hp) * Average BSFC (Btu/hp-hr)

(b) Maximum Hourly Emissions (lb/hr) = Emission factor (lb/hp-hr) * Engine Power Output (hp)

Annual Emissions - If emission factor note 1, 4 or 5 is used, use calculation (c). If emission factor note 3 is used, use calculation (d).

(c) Annual emissions (tons/yr) = Emission factor (lb/MMBtu) * (1MMBtu/1000000Btu) * Engine Power Output (hp) * Average BSFC (Btu/hp-hr) * Annual Hours of operation (hr/yr) * (1ton/2000lbs)

(d) Annual emissions (tons/yr) = Emission factor (lb/hp-hr) * Engine Power Output (hp) * Annual Hours of operation (hr/yr) * (1ton/2000lbs)

SO_2 Emissions - If emission factor note 2 is used, use calculations (e) and (f) for hourly and annual emissions, respectively.

(e) Maximum Hourly Emissions SO2 Caclulation (lb/hr) = (20.0 grain S/100ft3) * Fuel throughput (ft3/hr) * (1lb/7000 grains) * (lbmol S/32.06 lb S) * (lbmol SO2/ lbmol S) *(64.07 lb SO2/lbmol SO2)

(f) Annual Emissions SO2 Caclulation (ton/yr) = (0.25 grain S/100ft3) * Fuel throughput (ft3/hr) * (1lb/7000 grains) * (lbmol S/32.06 lb S) * (lbmol SO2/ lbmol S) *(64.07 lb SO2/lbmol SO2) * Annual hours of operation (hr/yr) * (1ton/2000lbs)

MAXIMUM HOURLY EMISSION INPUTS		
Engine Power Output (kW) =	5652	
Engine Power Output (hp) =	7,580	
Number of Engines =	1	
Average BSFC (BTU/HP-hr) =	8,000	(8)
Heat Content Natural Gas(Btu/scf) =	1,020.0	(9)
Fuel Throughput (ft3/hr) =	59,451.0	(10)
PTE Hours of Operation =	1	

ANNUAL EMISSION INPUTS		
Engine Power Output (kW) =	5023	
Engine Power Output (hp) =	6,736	
Number of Engines =	1	
Average BSFC (BTU/HP-hr) =	8,000	(8)
Heat Content Natural Gas(Btu/scf) =	1,020.0	(9)
Fuel Throughput (ft3/hr) =	52,831.4	(10)
PTE Hours of Operation =	8,760	

(g) CO_2 equivalent = $[(CO_2 \text{ emissions})*(GWP_{CO2})]+[(CH_4 \text{ emissions})*(GWP_{CH4})]+[(N_2O \text{ emissions})*(GWP_{N2O})]$

Global Warming Potential (GWP)

CO_2	1	(11)
CH_4	25	(11)
N_2O	298	(11)

Notes:

(1) AP-42, Chapter 3.1, Table 3.1-2a - *Emission Factors for Criteria Pollutants and Greenhouse Gases from Stationary Gas Trubines* (4/00)

(2) AP-42, Chapter 5.3, Section 5.3.1

(3) 45 CSR 13, Permit R13-2064G, Condition 5.1.1

(4) 45 CSR 13, Permit R13-2064G, Condition 5.1.2

(5) Emission factors supplied from vendor data

(6) AP-42, Chapter 3.1, Table 3.1-3 - *Emission Factors for Hazardous Air Pollutants from Natural Gas-Fired Statonary Gas Turbines* (4/00)

(7) Emission factors are from 40 CFR 98, Subpart C, Table C-1 and C-2.

(8) Fuel consumption from manufacturer's specification sheet.

(9) Value obtained from AP-42, Chapter 3.1, Table 3.1-2a, footnote c

(10) Fuel throughput = BSFC (BTU/HP-hr) x Power (HP) / Heat Content (BTU/scf)

(11) Global Warming Potentials obtained from 40 CFR 98, Subpart A, Table A-1

Table 4a. Combustion Turbine/Compressor Emissions (E06)
Solar; Centaur 40
Columbia Gas Transmission - Smithfield Compressor Station

Normal Load Operations (@ 32° F & > 50%)					Hours of Operation (hrs/yr)			8643
Pollutant	Maximum Hourly Emissions				Annual Emissions			
	Emission Factor		PTE per Engine (lb/hr)		Emission Factor		PTE per Engine (tons/yr)	
Criteria Pollutants								
NOx	9.83E-04 lb/hp-hr	(1)	4.14	(b)	9.83E-04 lb/hp-hr	(1)	17.89	(d)
CO	1.20E-03 lb/hp-hr	(1)	5.05	(b)	1.20E-03 lb/hp-hr	(1)	21.82	(d)
VOC	6.88E-05 lb/hp-hr	(1)	0.29	(b)	6.88E-05 lb/hp-hr	(1)	1.25	(d)

Low Temperature Operations (0°F > Temp > -20°F)					Hours of Operation (hrs/yr)			50
Pollutant	Maximum Hourly Emissions				Annual Emissions			
	Emission Factor		PTE per Engine (lb/hr)		Emission Factor		PTE per Engine (tons/yr)	
Criteria Pollutants								
NOx	1.82E-03 lb/hp-hr	(1)	7.67	(b)	1.82E-03 lb/hp-hr	(1)	0.19	(d)
CO	2.64E-03 lb/hp-hr	(1)	11.11	(b)	2.64E-03 lb/hp-hr	(1)	0.28	(d)
VOC	1.50E-04 lb/hp-hr	(1)	0.63	(b)	1.50E-04 lb/hp-hr	(1)	0.02	(d)

Very Low Temperature Operations (Temp < -20° F)					Hours of Operation (hrs/yr)			0
Pollutant	Maximum Hourly Emissions				Annual Emissions			
	Emission Factor		PTE per Engine (lb/hr)		Emission Factor		PTE per Engine (tons/yr)	
Criteria Pollutants								
NOx	5.20E-03 lb/hp-hr	(1)	21.90	(b)	5.20E-03 lb/hp-hr	(1)	0.00	(d)
CO	3.96E-03 lb/hp-hr	(1)	16.67	(b)	3.96E-03 lb/hp-hr	(1)	0.00	(d)
VOC	1.50E-04 lb/hp-hr	(1)	0.63	(b)	1.50E-04 lb/hp-hr	(1)	0.00	(d)

Low Load Operations (<50%)					Hours of Operation (hrs/yr)			50
Pollutant	Maximum Hourly Emissions				Annual Emissions			
	Emission Factor		PTE per Engine (lb/hr)		Emission Factor		PTE per Engine (tons/yr)	
Criteria Pollutants								
NOx	1.78E-03 lb/hp-hr	(1)	7.51	(b)	1.78E-03 lb/hp-hr	(1)	0.19	(d)
CO	7.23E-02 lb/hp-hr	(1)	304.73	(b)	7.23E-02 lb/hp-hr	(1)	7.62	(d)
VOC	8.26E-04 lb/hp-hr	(1)	3.48	(b)	8.26E-04 lb/hp-hr	(1)	0.09	(d)

Startup / Shutdown Cycles				50	Hours of Operation (hrs/yr)			17
Pollutant	Maximum Hourly Emissions				Annual Emissions			
	Emission Factor		PTE per Engine (lb/hr)		Emission Factor		PTE per Engine (tons/yr)	
Criteria Pollutants								
NOx	2.37E-04 lb/event	(1)	1.00	(b)	2.37E-04 lb/event	(1)	0.03	(d)
CO	2.25E-02 lb/event	(1)	94.60	(b)	2.25E-02 lb/event	(1)	2.37	(d)
VOC	2.56E-04 lb/event	(1)	1.08	(b)	2.56E-04 lb/event	(1)	0.03	(d)

Summarization of Operating Mode Emissions					Hours of Operation (hrs/yr)			8760
Pollutant	Maximum Hourly Emissions				Annual Emissions			
	Emission Factor		PTE per Engine (lb/hr)		Emission Factor		PTE per Engine (tons/yr)	
Criteria Pollutants								
NOx	9.91E-04 lb/hp-hr		4.40	(b)	9.91E-04 lb/hp-hr		18.30	(d)
CO	1.74E-03 lb/hp-hr		7.33	(b)	1.74E-03 lb/hp-hr		32.08	(d)
VOC	7.49E-05 lb/hp-hr		0.32	(b)	7.49E-05 lb/hp-hr		1.38	(d)

Table 4b. Combustion Turbine/Compressor Emissions (E06)
Solar; Centaur 40
Columbia Gas Transmission - Smithfield Compressor Station

Pollutant	Maximum Hourly Emissions					Annual Emissions				
	Emission Factor			PTE per Engine (lb/hr)		Emission Factor			PTE per Engine (tons/yr)	
Criteria Pollutants										
PM/PM10/PM2.5	6.60E-03	lb/MMBtu	(2)	0.32	(a)	6.60E-03	lb/MMBtu	(2)	1.33	(c)
SO_2	6.00E-02	lb/MMBtu	(3)	2.92	(a)	6.00E-02	lb/MMBtu	(3)	12.10	(c)
Hazardous Air Pollutants										
1,3-Butadiene	4.30E-07	lb/MMBtu	(4)	0.000	(a)	4.30E-07	lb/MMBtu	(4)	0.000	(c)
Acetaldehyde	4.00E-05	lb/MMBtu	(4)	0.002	(a)	4.00E-05	lb/MMBtu	(4)	0.008	(c)
Acrolein	6.40E-06	lb/MMBtu	(4)	0.000	(a)	6.40E-06	lb/MMBtu	(4)	0.001	(c)
Benzene	1.20E-05	lb/MMBtu	(4)	0.001	(a)	1.20E-05	lb/MMBtu	(4)	0.002	(c)
Ethylbenzene	3.20E-05	lb/MMBtu	(4)	0.002	(a)	3.20E-05	lb/MMBtu	(4)	0.006	(c)
Formaldehyde	7.10E-04	lb/MMBtu	(4)	0.035	(a)	7.10E-04	lb/MMBtu	(4)	0.143	(c)
Naphthalene	1.30E-06	lb/MMBtu	(4)	0.000	(a)	1.30E-06	lb/MMBtu	(4)	0.000	(c)
PAH (POM)	2.20E-06	lb/MMBtu	(4)	0.000	(a)	2.20E-06	lb/MMBtu	(4)	0.000	(c)
Phenol	2.90E-05	lb/MMBtu	(4)	0.001	(a)	2.90E-05	lb/MMBtu	(4)	0.006	(c)
Toluene	1.30E-04	lb/MMBtu	(4)	0.006	(a)	1.30E-04	lb/MMBtu	(4)	0.026	(c)
Xylenes	6.40E-05	lb/MMBtu	(4)	0.003	(a)	6.40E-05	lb/MMBtu	(4)	0.013	(c)
Total HAP				**0.050**					**0.207**	
Greenhouse Gas Emissions										
CO_2	116.89	lb/MMBtu	(5)	5687.84	(a)	116.89	lb/MMBtu	(5)	23566.22	(c)
CH_4	2.2E-03	lb/MMBtu	(5)	0.11	(a)	2.2E-03	lb/MMBtu	(5)	0.44	(c)
N_2O	2.2E-04	lb/MMBtu	(5)	0.01	(a)	2.2E-04	lb/MMBtu	(5)	0.04	(c)
CO_2e (g)	-	-		5693.71					23590.58	

Calculations:

Maximum Hourly Emissions - If emission factor note 1, 4 or 5 is used, use calculation (a). If emission factor note 3 is used, use calculation (b).

(a) Maximum Hourly Emissions (lb/hr) = Emission factor (lb/MMBtu) * HHV Total Heat Input @ 0^oF (mmBtu/hr)

(b) Maximum Hourly Emissions (lb/hr) = Emission factor (lb/hp-hr) * Engine Power Output (hp)

Annual Emissions - If emission factor note 1, 4 or 5 is used, use calculation (c). If emission factor note 3 is used, use calculation (d).

(c) Annual emissions (tons/yr) = Emission factor (lb/MMBtu) * HHV Total Heat Input @ 32^oF (mmBtu/hr) * Annual Hours of operation (hr/yr) * (1ton/2000lbs)

(d) Annual emissions (tons/yr) = Emission factor (lb/hp-hr) * Engine Power Output (hp) * Annual Hours of operation (hr/yr) * (1ton/2000lbs)

SO_2 Emissions - If emission factor note 2 is used, use calculations (e) and (f) for hourly and annual emissions, respectively.

(e) Maximum Hourly Emissions SO2 Caclulation (lb/hr) = (20.0 grain S/100ft3) * Fuel throughput (ft3/hr) * (1lb/7000 grains) * (lbmol S/32.06 lb S) * (lbmol SO2/ lbmol S) *(64.07 lb SO2/lbmol SO2)

(f) Annual Emissions SO2 Caclulation (ton/yr) = (0.25 grain S/100ft3) * Fuel throughput (ft3/hr) * (1lb/7000 grains) * (lbmol S/32.06 lb S) * (lbmol SO2/ lbmol S) *(64.07 lb SO2/lbmol SO2) * Annual hours of operation (hr/yr) * (1ton/2000lbs)

MAXIMUM HOURLY EMISSION INPUTS		
Engine Power Output (kW) =	3142	
Engine Power Output (hp) @ 32^oF =	4,213	
Average BSFC (BTU/HP-hr) @ 32^oF =	9,843	(6)
LHV Total Heat Input (mmBtu/hr) @ 32^oF =	41.47	(7)
HHV Total Heat Input (mmBtu/hr) @ 32^oF =	46.03	(8)
Fuel Throughput (ft3/hr) @ 32^oF =	45,127.5	(9)
HHV Heat Content Natural Gas(Btu/scf) =	1,020	(10)
Engine Power Output (hp) @ 0^oF =	4,433	
Average BSFC (BTU/HP-hr) @ 0^oF =	9,889	(6)
LHV Total Heat Input (mmBtu/hr) @ 0^oF =	43.84	(7)
HHV Total Heat Input (mmBtu/hr) @ 0^oF =	48.66	(8)
Fuel Throughput (ft3/hr) @ 0^oF =	47,706.0	(9)
Number of Engines =	1	
PTE Hours of Operation =	1	

ANNUAL EMISSION INPUTS		
Engine Power Output (kW) =	3142	
Engine Power Output (hp) @ 32^oF =	4,213	
Average BSFC (BTU/HP-hr) @ 32^oF =	9,843	(6)
LHV Total Heat Input (mmBtu/hr) @ 32^oF =	41.47	(7)
HHV Total Heat Input (mmBtu/hr) @ 32^oF =	46.03	(8)
Fuel Throughput (ft3/hr) @ 32^oF =	45,127.5	(9)
HHV Heat Content Natural Gas(Btu/scf) =	1,020	(10)
Engine Power Output (hp) @ 0^oF =	4,433	
Average BSFC (BTU/HP-hr) @ 0^oF =	9,889	(6)
LHV Total Heat Input (mmBtu/hr) @ 0^oF =	43.84	(7)
HHV Total Heat Input (mmBtu/hr) @ 0^oF =	48.66	(8)
Fuel Throughput (ft3/hr) @ 0^oF =	47,706.0	(9)
Number of Engines =	1	
PTE Hours of Operation =	8,760	

(g) CO_2 equivalent = $[(CO_2 \text{ emissions})*(GWP_{CO2})]+[(CH_4 \text{ emissions})*(GWP_{CH4})]+[(N_2O \text{ emissions})*(GWP_{N2O})]$

Global Warming Potential (GWP)

CO_2	1	(11)
CH_4	25	(11)
N_2O	298	(11)

Notes:

(1) Emissions supplied from vendor data

(2) AP-42, Chapter 3.1, Table 3.1-2a - *Emission Factors for Criteria Pollutants and Greenhouse Gases from Stationary Gas Trubines* (4/00)

(3) WV NSR Permit R13-2064G, Condition 5.1.9

(4) AP-42, Chapter 3.1, Table 3.1-3 - *Emission Factors for Hazardous Air Pollutants from Natural Gas-Fired Statonary Gas Turbines* (4/00)

(5) Emission factors are from 40 CFR 98, Subpart C, Table C-1 and C-2.

(6) Fuel consumption from manufacturer's specification sheet.

(7) Low Heat Value (LHV) Total Heat Input = Power (HP) * BSFC (BTU/hp-hr) / (1000000BTU/mmBtu)

(8) High Heat Value (HHV) Total Heat Input = LHV * 1.11

(9) Fuel throughput = HHV Total Heat Input (mmBtu/hr) * (1000000Btu/mmBtu) / Heat Content (Btu/scf)

(10) Value obtained from AP-42, Chapter 3.1, Table 3.1-2a, footnote c

(11) Global Warming Potentials obtained from 40 CFR 98, Subpart A, Table A-1

Table 5. Reciprocating Engine / Generator Emissions (G3)
Waukesha VGF-F18GL; 4SLB
Columbia Gas Transmission - Smithfield Compressor Station

Pollutant	Emission Factor			PTE (lb/hr)		PTE (ton/yr)	
Criteria Pollutants							
PM/PM10/PM2.5**	9.98E-03	lb/MMBtu	(1)	0.04	(a)	0.01	(c)
SO_2 (Hourly)	20.0 grains S / 100 ft^2		(2)	0.21	(e)	-	
SO_2 (Annual)	0.25 grains S / 100 ft^3		(2)	-		0.001	(f)
NOx	2.00E+00	g/hp-hr	(3)	1.94	(b)	0.49	(d)
CO	1.30E+00	g/hp-hr	(3)	1.26	(b)	0.32	(d)
VOC	2.60E-01	g/hp-hr	(3)	0.25	(b)	0.06	(d)
Hazardous Air Pollutants							
1,1,2,2-Tetrachloroethane	4.00E-05	lb/MMBtu	(1)	0.000	(a)	0.000	(c)
1,1,2-Trichloroethane	3.18E-05	lb/MMBtu	(1)	0.000	(a)	0.000	(c)
1,3-Butadiene	2.67E-04	lb/MMBtu	(1)	0.001	(a)	0.000	(c)
1,3-Dichloropropene	2.64E-05	lb/MMBtu	(1)	0.000	(a)	0.000	(c)
2-Methylnaphthalene	3.32E-05	lb/MMBtu	(1)	0.000	(a)	0.000	(c)
2,2,4-Trimethylpentane	2.50E-05	lb/MMBtu	(1)	0.000	(a)	0.000	(c)
Acetaldehyde	8.36E-03	lb/MMBtu	(1)	0.031	(a)	0.008	(c)
Acrolein	5.14E-03	lb/MMBtu	(1)	0.019	(a)	0.005	(c)
Benzene	4.40E-04	lb/MMBtu	(1)	0.002	(a)	0.000	(c)
Carbon Tetrachloride	3.67E-05	lb/MMBtu	(1)	0.000	(a)	0.000	(c)
Chlorobenzene	3.04E-05	lb/MMBtu	(1)	0.000	(a)	0.000	(c)
Chloroform	2.85E-05	lb/MMBtu	(1)	0.000	(a)	0.000	(c)
Ethylbenzene	3.97E-05	lb/MMBtu	(1)	0.000	(a)	0.000	(c)
Ethylene Dibromide	4.43E-05	lb/MMBtu	(1)	0.000	(a)	0.000	(c)
Formaldehyde	5.28E-02	lb/MMBtu	(1)	0.194	(a)	0.048	(c)
Methanol	2.50E-03	lb/MMBtu	(1)	0.009	(a)	0.002	(c)
Methylene Chloride	2.00E-05	lb/MMBtu	(1)	0.000	(a)	0.000	(c)
n-Hexane	1.11E-03	lb/MMBtu	(1)	0.004	(a)	0.001	(c)
Naphthalene	7.44E-05	lb/MMBtu	(1)	0.000	(a)	0.000	(c)
PAH (POM)	2.69E-05	lb/MMBtu	(1)	0.000	(a)	0.000	(c)
Phenanthrene	1.04E-05	lb/MMBtu	(1)	0.000	(a)	0.000	(c)
Phenol	2.40E-05	lb/MMBtu	(1)	0.000	(a)	0.000	(c)
Styrene	2.36E-05	lb/MMBtu	(1)	0.000	(a)	0.000	(c)
Toluene	4.08E-04	lb/MMBtu	(1)	0.001	(a)	0.000	(c)
Vinyl Chloride	1.49E-05	lb/MMBtu	(1)	0.000	(a)	0.000	(c)
Xylenes	1.84E-04	lb/MMBtu	(1)	0.001	(a)	0.000	(c)
Total HAPs				**0.263**		**0.066**	
Greenhouse Gas Emissions							
CO_2	116.89	lb/MMBtu	(4)	428.99	(a)	107.25	(c)
CH_4	2.2E-03	lb/MMBtu	(4)	0.01	(a)	0.00	(c)
N_2O	2.2E-04	lb/MMBtu	(4)	0.00	(a)	0.00	(c)
$CO_2e^{(g)}$	-	-		429.43		107.36	

** includes condensible PM

Calculations:

Hourly Emissions - If emission factor note 1 or 4 is used, use calculation (a). If emission factor note 3 is used, use calculation (b).

(a) Maximum Hourly Emissions (lb/hr) = Emission factor (lb/MMBtu) * (1MMBtu/1000000 Btu) * Engine Power Output (hp) * Average BSFC (Btu/hp-hr)

(b) Maximum Hourly Emissions (lb/hr) = Emission factor (g/hp-hr) * Engine Power Output (hp) * (lb/453.6g)

Annual Emissions - If emission factor note 1 or 4 is used, use calculation (c). If emission factor note 3 is used, use calculation (d).

(c) Annual emissions (tons/yr) = Emission factor (lb/MMBtu) * (1MMBtu/1000000Btu) * Engine Power Output (hp) * Average BSFC (Btu/hp-hr) * Annual Hours of operation (hr/yr) * (1ton/2000lbs)

(d) Annual emissions (tons/yr) = Emission factor (g/hp-hr) * Engine Power Output (hp) * Annual Hours of operation (hr/yr) * (1ton/2000lbs) * (lb/453.6g)

SO_2 Emissions - If emission factor note 2 is used, use calculations (e) and (f) for hourly and annual emissions, respectively.

(e) Maximum Hourly Emissions SO2 Caclulation (lb/hr) = (20 grain S/100ft3) * Fuel throughput (ft3/hr) * (1lb/7000 grains) * (lbmol S/32.06 lb S) * (lbmol SO2/ lbmol S) *(64.07 lb SO2/lbmol SO2)

(f) Annual Emissions SO2 Caclulation (ton/yr) = (0.25 grain S/100ft3) * Fuel throughput (ft3/hr) * (1lb/7000 grains) * (lbmol S/32.06 lb S) * (lbmol SO2/ lbmol S) *(64.07 lb SO2/lbmol SO2) * Annual hours of operation (hr/yr) * (1ton/2000lbs)

EMISSION INPUTS TABLE		
Engine Power Output (kW) =	328	
Engine Power Output (hp) =	440	
Number of Engines Operating at a Time =	1	
Average BSFC (BTU/HP-hr) =	8,341	(5)
Heat Content Natural Gas(Btu/scf) =	1,020.0	(6)
Fuel Throughput (ft3/hr) =	3,598.1	(7)
PTE Hours of Operation =	500	

(g) CO_2 equivalent = $[(CO_2 \text{ emissions})*(GWP_{CO2})]+[(CH_4 \text{ emissions})*(GWP_{CH4})]+[(N_2O \text{ emissions})*(GWP_{N2O})]$

Global Warming Potential (GWP)

CO_2	1	(8)
CH_4	25	(8)
N_2O	298	(8)

Notes:

(1) AP-42, Chapter 3.2, Table 3.2-2. - *Uncontrolled Emission Factors for 4-Stroke Lean Burn Engines* (7/00)

(2) AP-42, Chapter 5.3, Section 5.3.1

(3) Emission factors supplied from manufacturer's specification sheets

(4) Emission factors are from 40 CFR 98, Subpart C, Table C-1 and C-2.

(5) Fuel consumption from manufacturer's specification sheet.

(6) Value obtained from AP-42, Chapter 3.2, Table 3.2-3, footnote b

(7) Fuel throughput = BSFC (BTU/HP-hr) x Power (HP) / Heat Content (BTU/scf)

(8) Global Warming Potentials obtained from 40 CFR 98, Subpart A, Table A-1

Table 6. Heating System Boiler Emissions (BLR1)
American Standard; Model # 1BN-J-3
Columbia Gas Transmission - Smithfield Compressor Station

Pollutant	Emission Factor			PTE (lb/hr)		PTE (ton/yr)	
Criteria Pollutants							
PM/PM10/PM2.5	7.6	lb/MMcf	(1)	0.02	(a)	0.07	(b)
SO_2 (Hourly)	20 grains S / 100ft^3		(5)	0.13	(e)	-	
SO_2 (Annual)	0.25 grains S / 100ft^3		(5)	-		0.01	(f)
NOx	100	lb/MMcf	(2)	0.22	(a)	0.98	(b)
CO	84	lb/MMcf	(2)	0.19	(a)	0.82	(b)
VOC	5.5	lb/MMcf	(1)	0.01	(a)	0.05	(b)
Hazardous Air Pollutants							
Arsenic	2.00E-04	lb/MMcf	(3)	0.00	(a)	0.000	(b)
Benzene	2.10E-03	lb/MMcf	(4)	0.00	(a)	0.000	(b)
Beryllium	1.20E-05	lb/MMcf	(3)	0.00	(a)	0.000	(b)
Cadmium	1.10E-03	lb/MMcf	(3)	0.00	(a)	0.000	(b)
Chromium	1.40E-03	lb/MMcf	(3)	0.00	(a)	0.000	(b)
Cobalt	8.40E-05	lb/MMcf	(3)	0.00	(a)	0.000	(b)
Dichlorobenzene	1.20E-03	lb/MMcf	(4)	0.00	(a)	0.000	(b)
Formaldehyde	7.50E-02	lb/MMcf	(4)	0.00	(a)	0.001	(b)
Hexane	1.80E+00	lb/MMcf	(4)	0.00	(a)	0.018	(b)
Lead	5.00E-04	lb/MMcf	(3)	0.00	(a)	0.000	(b)
Manganese	3.80E-04	lb/MMcf	(3)	0.00	(a)	0.000	(b)
Mercury	2.60E-04	lb/MMcf	(3)	0.00	(a)	0.000	(b)
Naphthalene	6.10E-04	lb/MMcf	(4)	0.00	(a)	0.000	(b)
Nickel	2.10E-03	lb/MMcf	(3)	0.00	(a)	0.000	(b)
PAH/POM	1.29E-03	lb/MMcf	(4)	0.00	(a)	0.000	(b)
Selenium	2.40E-05	lb/MMcf	(3)	0.00	(a)	0.000	(b)
Toluene	3.40E-03	lb/MMcf	(4)	0.00	(a)	0.000	(b)
Total HAP				0.00		0.019	
Greenhouse Gas Emissions							
CO_2	116.89	lb/MMBtu	(6)	266.97	(c)	1169.35	(d)
CH_4	2.2E-03	lb/MMBtu	(6)	0.01	(c)	0.02	(d)
N_2O	2.2E-04	lb/MMBtu	(6)	0.00	(c)	0.00	(d)
$CO_2e^{(g)}$	-	-		267.25		1170.56	

Calculations:

LB/MMCF

(a) Hourly emissions (lb/hr) = Emission Factor (lb/MMcf) * Fuel Use (MMCF/yr) / Annual hours of operation (hr/yr)

(b) Annual emissions (ton/yr) = Emission Factor (lb/MMcf) * Fuel Use (MMcf/yr) * (1ton/2000lbs)

LB/MMBTU

(c) Hourly Emissions (lb/hr) = Emission Factor (lb/MMBtu) * Fuel Use (MMBtu/hr)

(d) Annual Emissions (ton/yr) = Emission Factor (lb/MMBtu) * Fuel Use (MMBtu/hr) * Hours of operation (hr/yr) * (1ton/2000lbs)

SO_2

(e) Hourly Emissions SO2 Caclulation (lb/hr) = (20 grain S/100ft3) * Fuel throughput (MMft3/yr) * (1000000ft3/1MMft3) / annual hours of operation (hr/yr) * (1lb/7000 grains) * (lbmol S/32.06 lb S) * (lbmol SO2/ lbmol S) *(64.07 lb SO2/lbmol SO2)

(f) Annual Emissions SO2 Caclulation (ton/yr) = (0.25 grain S/100ft3) * Fuel throughput (MMft3/yr) * (1000000ft3/1MMft3) * (1lb/7000 grains) * (lbmol S/32.06 lb S) * (lbmol SO2/ lbmol S) *(64.07 lb SO2/lbmol SO2) * (1ton/2000lbs)

EMISSION INPUTS TABLE	
Fuel Use (MMBtu/hr) =	2.284
Number of Units =	1
Hours of Operation (hr/yr)=	8760
MMBtu/MMcf=	1020
PTE Fuel Use (MMft3/yr) =	19.62

(g) CO_2 equivalent = [(CO_2 emissions)*(GWP_{CO2})]+[(CH_4 emissions)*(GWP_{CH4})]+[(N_2O emissions)*(GWP_{N2O})]

Global Warming Potential (GWP)

CO_2	1	(7)
CH_4	25	(7)
N_2O	298	(7)

Notes:

(1) AP-42, Chapter 1.4, Table 1.4-2. Emission Factors For Criteria Pollutants and Greenhouse Gases From Natural Gas Combustion, July 1998.

(2) AP-42, Chapter 1.4, Table 1.4-1. Emission Factors For Nitrogen Oxides (Nox) and Carbon Monoxide(CO) From Natural Gas Combustion, July 1998.

(3) AP-42, Chapter 1.4, Table 1.4-4. Emission Factors For Metals From Natural Gas Combustion, July 1998.

(4) AP-42, Chapter 1.4, Table 1.4-3. Emission Factors for Speciated Organic Compounds from Natural Gas Combustion, July 1998.

(5) AP-42, Chapter 5.3, Section 5.3.1

(6) Emission factors are from 40 CFR 98, Subpart C, Table C-1 and C-2.

(7) Global Warming Potentials obtained from 40 CFR 98, Subpart A, Table A-1

Table 7. Line Heater Emissions (H1)
BS&B; Model # J-92-02
Columbia Gas Transmission - Smithfield Compressor Station

Pollutant	Emission Factor			PTE (lb/hr)		PTE (ton/yr)	
Criteria Pollutants							
PM/PM10/PM2.5	7.6	lb/MMcf	(1)	0.00	(a)	0.01	(b)
SO_2 (Hourly)	20 grains S / 100ft^3		(5)	0.01	(e)	-	
SO_2 (Annual)	0.25 grains S / 100ft^3		(5)	-		0.00	(f)
NOx	100	lb/MMcf	(2)	0.02	(a)	0.11	(b)
CO	84	lb/MMcf	(2)	0.02	(a)	0.09	(b)
VOC	5.5	lb/MMcf	(1)	0.00	(a)	0.01	(b)
Hazardous Air Pollutants							
Arsenic	2.00E-04	lb/MMcf	(3)	0.00	(a)	0.000	(b)
Benzene	2.10E-03	lb/MMcf	(4)	0.00	(a)	0.000	(b)
Beryllium	1.20E-05	lb/MMcf	(3)	0.00	(a)	0.000	(b)
Cadmium	1.10E-03	lb/MMcf	(3)	0.00	(a)	0.000	(b)
Chromium	1.40E-03	lb/MMcf	(3)	0.00	(a)	0.000	(b)
Cobalt	8.40E-05	lb/MMcf	(3)	0.00	(a)	0.000	(b)
Dichlorobenzene	1.20E-03	lb/MMcf	(4)	0.00	(a)	0.000	(b)
Formaldehyde	7.50E-02	lb/MMcf	(4)	0.00	(a)	0.000	(b)
Hexane	1.80E+00	lb/MMcf	(4)	0.00	(a)	0.002	(b)
Lead	5.00E-04	lb/MMcf	(3)	0.00	(a)	0.000	(b)
Manganese	3.80E-04	lb/MMcf	(3)	0.00	(a)	0.000	(b)
Mercury	2.60E-04	lb/MMcf	(3)	0.00	(a)	0.000	(b)
Naphthalene	6.10E-04	lb/MMcf	(4)	0.00	(a)	0.000	(b)
Nickel	2.10E-03	lb/MMcf	(3)	0.00	(a)	0.000	(b)
PAH/POM	1.29E-03	lb/MMcf	(4)	0.00	(a)	0.000	(b)
Selenium	2.40E-05	lb/MMcf	(3)	0.00	(a)	0.000	(b)
Toluene	3.40E-03	lb/MMcf	(4)	0.00	(a)	0.000	(b)
Total HAP				0.00		0.002	
Greenhouse Gas Emissions							
CO_2	116.89	lb/MMBtu	(6)	29.22	(c)	127.99	(d)
CH_4	2.2E-03	lb/MMBtu	(6)	0.00	(c)	0.00	(d)
N_2O	2.2E-04	lb/MMBtu	(6)	0.00	(c)	0.00	(d)
$CO_2e^{(g)}$	-	-		29.25		128.13	

Calculations:

LB/MMCF

(a) Hourly emissions (lb/hr) = Emission Factor (lb/MMcf) * Fuel Use (MMCF/yr) / Annual hours of operation (hr/yr)

(b) Annual emissions (ton/yr) = Emission Factor (lb/MMcf) * Fuel Use (MMcf/yr) * (1ton/2000lbs)

LB/MMBTU

(c) Hourly Emissions (lb/hr) = Emission Factor (lb/MMBtu) * Fuel Use (MMBtu/hr)

(d) Annual Emissions (ton/yr) = Emission Factor (lb/MMBtu) * Fuel Use (MMBtu/hr) * Hours of operation (hr/yr) * (1ton/2000lbs)

SO_2

(e) Hourly Emissions SO2 Caclulation (lb/hr) = (20 grain S/100ft3) * Fuel throughput (MMft3/yr) * (1000000ft3/1MMft3) / annual hours of operation (hr/yr) * (1lb/7000 grains) * (lbmol S/32.06 lb S) * (lbmol SO2/ lbmol S) *(64.07 lb SO2/lbmol SO2)

(f) Annual Emissions SO2 Caclulation (ton/yr) = (0.25 grain S/100ft3) * Fuel throughput (MMft3/yr) * (1000000ft3/1MMft3) * (1lb/7000 grains) * (lbmol S/32.06 lb S) * (lbmol SO2/ lbmol S) *(64.07 lb SO2/lbmol SO2) * (1ton/2000lbs)

EMISSION INPUTS TABLE	
Fuel Use (MMBtu/hr) =	0.25
Number of Units =	1
Hours of Operation (hr/yr)=	8760
MMBtu/MMcf=	1020
PTE Fuel Use (MMft3/yr) =	2.15

(g) CO_2 equivalent = [(CO_2 emissions)*(GWP_{CO2})]+[(CH_4 emissions)*(GWP_{CH4})]+[(N_2O emissions)*(GWP_{N2O})]

Global Warming Potential (GWP)

CO_2	1	(7)
CH_4	25	(7)
N_2O	298	(7)

Notes:

(1) AP-42, Chapter 1.4, Table 1.4-2. Emission Factors For Criteria Pollutants and Greenhouse Gases From Natural Gas Combustion, July 1998.

(2) AP-42, Chapter 1.4, Table 1.4-1. Emission Factors For Nitrogen Oxides (Nox) and Carbon Monoxide(CO) From Natural Gas Combustion, July 1998.

(3) AP-42, Chapter 1.4, Table 1.4-4. Emission Factors For Metals From Natural Gas Combustion, July 1998.

(4) AP-42, Chapter 1.4, Table 1.4-3. Emission Factors for Speciated Organic Compounds from Natural Gas Combustion, July 1998.

(5) AP-42, Chapter 5.3, Section 5.3.1

(6) Emission factors are from 40 CFR 98, Subpart C, Table C-1 and C-2.

(7) Global Warming Potentials obtained from 40 CFR 98, Subpart A, Table A-1

Table 8. Line Heater Emissions (H2)
Total Energy Resources, Inc; Model # FAH18-6
Columbia Gas Transmission - Smithfield Compressor Station

Pollutant	Emission Factor			PTE (lb/hr)		PTE (ton/yr)	
Criteria Pollutants							
PM/PM10/PM2.5	7.6	lb/MMcf	(1)	0.00	(a)	0.02	(b)
SO_2 (Hourly)	20 grains S / 100ft^3		(5)	0.03	(e)	-	
SO_2 (Annual)	0.25 grains S / 100ft^3		(5)	-		0.00	(f)
NOx	100	lb/MMcf	(2)	0.05	(a)	0.21	(b)
CO	84	lb/MMcf	(2)	0.04	(a)	0.18	(b)
VOC	5.5	lb/MMcf	(1)	0.00	(a)	0.01	(b)
Hazardous Air Pollutants							
Arsenic	2.00E-04	lb/MMcf	(3)	0.00	(a)	0.000	(b)
Benzene	2.10E-03	lb/MMcf	(4)	0.00	(a)	0.000	(b)
Beryllium	1.20E-05	lb/MMcf	(3)	0.00	(a)	0.000	(b)
Cadmium	1.10E-03	lb/MMcf	(3)	0.00	(a)	0.000	(b)
Chromium	1.40E-03	lb/MMcf	(3)	0.00	(a)	0.000	(b)
Cobalt	8.40E-05	lb/MMcf	(3)	0.00	(a)	0.000	(b)
Dichlorobenzene	1.20E-03	lb/MMcf	(4)	0.00	(a)	0.000	(b)
Formaldehyde	7.50E-02	lb/MMcf	(4)	0.00	(a)	0.000	(b)
Hexane	1.80E+00	lb/MMcf	(4)	0.00	(a)	0.004	(b)
Lead	5.00E-04	lb/MMcf	(3)	0.00	(a)	0.000	(b)
Manganese	3.80E-04	lb/MMcf	(3)	0.00	(a)	0.000	(b)
Mercury	2.60E-04	lb/MMcf	(3)	0.00	(a)	0.000	(b)
Naphthalene	6.10E-04	lb/MMcf	(4)	0.00	(a)	0.000	(b)
Nickel	2.10E-03	lb/MMcf	(3)	0.00	(a)	0.000	(b)
PAH/POM	1.29E-03	lb/MMcf	(4)	0.00	(a)	0.000	(b)
Selenium	2.40E-05	lb/MMcf	(3)	0.00	(a)	0.000	(b)
Toluene	3.40E-03	lb/MMcf	(4)	0.00	(a)	0.000	(b)
Total HAP				0.00		0.004	
Greenhouse Gas Emissions							
CO_2	116.89	lb/MMBtu	(6)	58.44	(c)	255.99	(d)
CH_4	2.2E-03	lb/MMBtu	(6)	0.00	(c)	0.00	(d)
N_2O	2.2E-04	lb/MMBtu	(6)	0.00	(c)	0.00	(d)
CO_2e (g)	-	-		58.50		256.25	

Calculations:

LB/MMCF

(a) Hourly emissions (lb/hr) = Emission Factor (lb/MMcf) * Fuel Use (MMCF/yr) / Annual hours of operation (hr/yr)

(b) Annual emissions (ton/yr) = Emission Factor (lb/MMcf) * Fuel Use (MMcf/yr) * (1ton/2000lbs)

LB/MMBTU

(c) Hourly Emissions (lb/hr) = Emission Factor (lb/MMBtu) * Fuel Use (MMBtu/hr)

(d) Annual Emissions (ton/yr) = Emission Factor (lb/MMBtu) * Fuel Use (MMBtu/hr) * Hours of operation (hr/yr) * (1ton/2000lbs)

SO_2

(e) Hourly Emissions SO2 Caclulation (lb/hr) = (20 grain S/100ft3) * Fuel throughput (MMft3/yr) * (1000000ft3/1MMft3) / annual hours of operation (hr/yr) * (1lb/7000 grains) * (lbmol S/32.06 lb S) * (lbmol SO2/ lbmol S) *(64.07 lb SO2/lbmol SO2)

(f) Annual Emissions SO2 Caclulation (ton/yr) = (0.25 grain S/100ft3) * Fuel throughput (MMft3/yr) * (1000000ft3/1MMft3) * (1lb/7000 grains) * (lbmol S/32.06 lb S) * (lbmol SO2/ lbmol S) *(64.07 lb SO2/lbmol SO2) * (1ton/2000lbs)

EMISSION INPUTS TABLE	
Fuel Use (MMBtu/hr) =	0.5
Number of Units =	1
Hours of Operation (hr/yr)=	8760
MMBtu/MMcf=	1020
PTE Fuel Use (MMft3/yr) =	4.29

(g) CO_2 equivalent = [(CO_2 emissions)*(GWP_{CO2})]+[(CH_4 emissions)*(GWP_{CH4})]+[(N_2O emissions)*(GWP_{N2O})]
Global Warming Potential (GWP)

CO_2	1	(7)
CH_4	25	(7)
N_2O	298	(7)

Notes:

(1) AP-42, Chapter 1.4, Table 1.4-2. Emission Factors For Criteria Pollutants and Greenhouse Gases From Natural Gas Combustion, July 1998.

(2) AP-42, Chapter 1.4, Table 1.4-1. Emission Factors For Nitrogen Oxides (Nox) and Carbon Monoxide(CO) From Natural Gas Combustion, July 1998.

(3) AP-42, Chapter 1.4, Table 1.4-4. Emission Factors For Metals From Natural Gas Combustion, July 1998.

(4) AP-42, Chapter 1.4, Table 1.4-3. Emission Factors for Speciated Organic Compounds from Natural Gas Combustion, July 1998.

(5) AP-42, Chapter 5.3, Section 5.3.1

(6) Emission factors are from 40 CFR 98, Subpart C, Table C-1 and C-2.

(7) Global Warming Potentials obtained from 40 CFR 98, Subpart A, Table A-1

Table 9. Warehouse Furnace/Heater Emissions (H3)
Unknown Make / Model
Columbia Gas Transmission - Smithfield Compressor Station

Pollutant	Emission Factor			PTE (lb/hr)		PTE (ton/yr)	
Criteria Pollutants							
PM/PM10/PM2.5	7.6	lb/MMcf	(1)	0.00	(a)	0.01	(b)
SO_2 (Hourly)	20 grains S / 100ft^3		(5)	0.02	(e)	-	
SO_2 (Annual)	0.25 grains S / 100ft^3		(5)	-		0.00	(f)
NOx	100	lb/MMcf	(2)	0.03	(a)	0.13	(b)
CO	84	lb/MMcf	(2)	0.02	(a)	0.11	(b)
VOC	5.5	lb/MMcf	(1)	0.00	(a)	0.01	(b)
Hazardous Air Pollutants							
Arsenic	2.00E-04	lb/MMcf	(3)	0.00	(a)	0.000	(b)
Benzene	2.10E-03	lb/MMcf	(4)	0.00	(a)	0.000	(b)
Beryllium	1.20E-05	lb/MMcf	(3)	0.00	(a)	0.000	(b)
Cadmium	1.10E-03	lb/MMcf	(3)	0.00	(a)	0.000	(b)
Chromium	1.40E-03	lb/MMcf	(3)	0.00	(a)	0.000	(b)
Cobalt	8.40E-05	lb/MMcf	(3)	0.00	(a)	0.000	(b)
Dichlorobenzene	1.20E-03	lb/MMcf	(4)	0.00	(a)	0.000	(b)
Formaldehyde	7.50E-02	lb/MMcf	(4)	0.00	(a)	0.000	(b)
Hexane	1.80E+00	lb/MMcf	(4)	0.00	(a)	0.002	(b)
Lead	5.00E-04	lb/MMcf	(3)	0.00	(a)	0.000	(b)
Manganese	3.80E-04	lb/MMcf	(3)	0.00	(a)	0.000	(b)
Mercury	2.60E-04	lb/MMcf	(3)	0.00	(a)	0.000	(b)
Naphthalene	6.10E-04	lb/MMcf	(4)	0.00	(a)	0.000	(b)
Nickel	2.10E-03	lb/MMcf	(3)	0.00	(a)	0.000	(b)
PAH/POM	1.29E-03	lb/MMcf	(4)	0.00	(a)	0.000	(b)
Selenium	2.40E-05	lb/MMcf	(3)	0.00	(a)	0.000	(b)
Toluene	3.40E-03	lb/MMcf	(4)	0.00	(a)	0.000	(b)
Total HAP				0.00		0.002	
Greenhouse Gas Emissions							
CO_2	116.89	lb/MMBtu	(6)	35.07	(c)	153.59	(d)
CH_4	2.2E-03	lb/MMBtu	(6)	0.00	(c)	0.00	(d)
N_2O	2.2E-04	lb/MMBtu	(6)	0.00	(c)	0.00	(d)
$CO_2e^{(g)}$	-	-		35.10		153.75	

Calculations:

LB/MMCF

(a) Hourly emissions (lb/hr) = Emission Factor (lb/MMcf) * Fuel Use (MMCF/yr) / Annual hours of operation (hr/yr)

(b) Annual emissions (ton/yr) = Emission Factor (lb/MMcf) * Fuel Use (MMcf/yr) * (1ton/2000lbs)

LB/MMBTU

(c) Hourly Emissions (lb/hr) = Emission Factor (lb/MMBtu) * Fuel Use (MMBtu/hr)

(d) Annual Emissions (ton/yr) = Emission Factor (lb/MMBtu) * Fuel Use (MMBtu/hr) * Hours of operation (hr/yr) * (1ton/2000lbs)

SO_2

(e) Hourly Emissions SO2 Caclulation (lb/hr) = (20 grain S/100ft3) * Fuel throughput (MMft3/yr) * (1000000ft3/1MMft3) / annual hours of operation (hr/yr) * (1lb/7000 grains) * (lbmol S/32.06 lb S) * (lbmol SO2/ lbmol S) *(64.07 lb SO2/lbmol SO2)

(f) Annual Emissions SO2 Caclulation (ton/yr) = (0.25 grain S/100ft3) * Fuel throughput (MMft3/yr) * (1000000ft3/1MMft3) * (1lb/7000 grains) * (lbmol S/32.06 lb S) * (lbmol SO2/ lbmol S) *(64.07 lb SO2/lbmol SO2) * (1ton/2000lbs)

EMISSION INPUTS TABLE	
Fuel Use (MMBtu/hr) =	0.3
Number of Units =	1
Hours of Operation (hr/yr)=	8760
MMBtu/MMcf=	1020
PTE Fuel Use (MMft3/yr) =	2.58

(g) CO_2 equivalent = $[(CO_2 \text{ emissions})*(GWP_{CO2})]+[(CH_4 \text{ emissions})*(GWP_{CH4})]+[(N_2O \text{ emissions})*(GWP_{N2O})]$

Global Warming Potential (GWP)

CO_2	1	(7)
CH_4	25	(7)
N_2O	298	(7)

Notes:

(1) AP-42, Chapter 1.4, Table 1.4-2. Emission Factors For Criteria Pollutants and Greenhouse Gases From Natural Gas Combustion, July 1998.

(2) AP-42, Chapter 1.4, Table 1.4-1. Emission Factors For Nitrogen Oxides (Nox) and Carbon Monoxide(CO) From Natural Gas Combustion, July 1998.

(3) AP-42, Chapter 1.4, Table 1.4-4. Emission Factors For Metals From Natural Gas Combustion, July 1998.

(4) AP-42, Chapter 1.4, Table 1.4-3. Emission Factors for Speciated Organic Compounds from Natural Gas Combustion, July 1998.

(5) AP-42, Chapter 5.3, Section 5.3.1

(6) Emission factors are from 40 CFR 98, Subpart C, Table C-1 and C-2.

(7) Global Warming Potentials obtained from 40 CFR 98, Subpart A, Table A-1

Table 10. Tank Emissions
Columbia Gas Transmission - Smithfield Compressor Station

Emission Point	Tank Capacity (gal)	Tank Contents	Control Devices	Tank Throughput (bbls/day)	VOC Emission Factor (lbs/bbls)		VOC Emissions (lbs/yr)[(a)]	VOC Emissions (lb/hr)[(b)]	VOC Emissions (tons/yr)[(c)]
A01	5000	Ethanol	None	3.91	6.61E-02	(1)	94.45	0.011	0.047
A02	5000	Lube Oil	None	3.91	1.64E-03	(1)	2.34	0.000	0.001
A03	5000	Used Oil	None	3.91	1.64E-03	(1)	2.34	0.000	0.001
A06	550	Wastewater Mix	None	0.43	1.65E-03	(1)	0.26	0.000	0.000
A07	1000	Wastewater Mix	None	0.78	1.68E-03	(1)	0.48	0.000	0.000
A08	1000	Wastewater Mix	None	0.78	1.68E-03	(1)	0.48	0.000	0.000
A09	1250	Lube Oil	None	0.98	1.62E-03	(1)	0.58	0.000	0.000
A10	1250	Used Oil	None	0.98	1.62E-03	(1)	0.58	0.000	0.000
A11	2500	Ethanol	None	1.96	6.74E-02	(1)	48.12	0.005	0.024
A12	2500	Ethanol	None	1.96	6.74E-02	(1)	48.12	0.005	0.024
A13	2000	Pipeline Liquids	None	1.57	1.20E+00	(2)	685.14	0.078	0.343
A14	2000	Pipeline Liquids	None	1.57	1.20E+00	(2)	685.14	0.078	0.343
A15	500	Used Oil	None	0.39	1.68E-03	(1)	0.24	0.000	0.000
Totals							**1568.28**	**0.18**	**0.78**

Calculations:

(a) VOC Emissions (lb/day) = Tank Throughput (bbls/day) * VOC Emission Factor (lbs/bbls)

(b) VOC Emissions (lb/hr) = VOC Emissions (lbs/yr) * (yr/8760hr)

(c) VOC Emissions (ton/yr) = VOC Emissions (lbs/yr) * (1ton/2000lbs)

Notes:

(1) VOC emission factor includes Working/Breathing losses as calculated from TANKS 4.0.9.d

(2) VOC emission factor includes Flashing/Working/Breathing losses calculated from pressurized liquid sample (GOR= 0.059 lb VOC/bbl) direct flash measurement added to working and breathing losses calculated using EPA Tanks 4.09. The pressurized liquid sample was taken from a high pressure separator (1400 psi) at a similar site and is considered to be worst case representative with respect to gas composition and pressure at the Station

Table 11. Fugitive Leak Emissions
Columbia Gas Transmission - Smithfield Compressor Station

Pollutant	Emission Factor			PTE[(a)] Gas Service (tons/yr)
Valves	9.9E-03	lb/hr/source	(1)	28.11
Low Bleed Pneumatic Valves	9.9E-03	lb/hr/source	(1)	0.48
Flanges	8.6E-04	lb/hr/source	(1)	8.53
Connector	4.4E-04	lb/hr/source	(1)	4.38
Other Points in Gas Service	1.9E-02	lb/hr/source	(1)	8.99
Total Gas Released	-	-		50.49
Total VOC Released (gas service)			(b)	**5.05**
			CO2e	117.38

Calculations:

(a) Annual emissions (tons/yr) = [Emission Factor (lb/hr/source)] x [Number of Sources] x [Hours of Operation per Year] x [0.0005 tons/ lb]

(b) Gas sample for station assumed to be worst case at 10 wt % VOC[(3)]

Number of Components in Gas Service

Valves=	647	(2)
Low Bleed Pneumatic Valves=	11	(2)
Connectors=	2,265	(2)
Other Points in Gas Service =	48	(2)
Maximum Hour of Operation =	8,760	

(1) Emission factors from 1995 EPA Protocol for Equipment Leak Emission Estimates, Table 2-4 Oil and Gas Production

(2) *Default Average Component Counts for Major Onshore Natural Gas Production Equipment* from 40 CFR 98, Subpart W, Table W-1B

(3) Worst case VOC wt % assumption for station based on gas sample analysis from compressor stations located in close proximity to the site

(4) Global Warming Potentials obtained from 40 CFR 98, Subpart A, Table A-1

Table 12. Centrigugal Compressor Venting Emissions
Solar; Centaur 40 (E06)
Columbia Gas Transmission - Smithfield Compressor Station

Number of Pneumatic Actuators:	6	per turbine		
Pneumatic Actuator Vent Rate:	3	scf/hr/actuator	18	scf/hr/turbine
Number of Startup/Shutdown Cycles	50	per yr		
Pneumatic Starter Emissions per Startup	13,663	scf/event/turbine		
Blowdown Emnissions per Shutdown	21,550	scf/event/turbine		
Number of Turbines	1			
Number of Dry Seals	4	per turbine		
Dry Seal Vent Rate	0.5	scf/min/seal	120	scf/hr/turbine
Annual Operating Hours	8760			

Component	Emission Rate								
	Total	CH_4 (2)	CO_2 (2)	CH_4 (3)	CO_2 (3)	CH_4	CO_2	CO_{2e}	VOC (6)
Continuous During Operation	**scf/hr**	**scf/hr**	**scf/hr**	**lb/hr**	**lb/hr**	**ton/yr**	**ton/yr**	**ton/yr**	**ton/yr**
Pneumatic Actuator (Total for Number of units)	18.00	16.79	0.18	0.71	0.02	3.11	0.09	77.73	0.12
Dry Seals (Total for number of units)	120.00	111.90	1.19	4.73	0.14	20.70	0.60	518.17	0.81
Intermittent During Startup/Shutdown	**scf/event**	**scf/event**	**scf/event**	**lb/event**	**lb/event**	**ton/yr**	**ton/yr**	**ton/yr**	**ton/yr**
Pneumatic Starter (Total for Number of Units)(1)	1.37E+04	1.27E+04	135.26	538.17	15.65	13.45	0.39	3.37E+02	0.52
Blowdowns (Total for Number of Units)(1,5)	2.16E+04	2.01E+04	213.35	848.83	24.69	21.22	0.62	5.31E+02	0.83
							Total	1463.78	**2.28**

1. Emission rates per event instead of per hour
2. CH4 and CO2 emission rates based on 93.25 vol % CH4 and 0.99 vol % CO2 in natural gas
3. Conversion based on Densities of GHG as provided in 40 CFR 98.233(v) [density CH4 - 0.0192 kg/scf ; CO2 - 0.0526 kg/scf]
4. Based on 40 CFR 98 Subpart A Global Warming Potentials
5. Conservative estimate based on 1 blowdown per shutdown. It is not expected that a blowdown will occur after each shutdown.
6. Based on a 0.039 ratio of VOC to methane as calculated from gas composition.

APPENDIX B

PROPOSED PERMIT LANGUAGE

Title V Operating Permit Renewal Application

Smithfield Compressor Station, Facility ID No. 103-00010
Smithfield, West Virginia

Columbia Gas Transmission, LLC
1700 MacCorkle Avenue, SE
Charleston, West Virginia

April 2017

West Virginia Department of Environmental Protection
Division of Air Quality

Jim Justice
Governor

Austin Caperton
Cabinet Secretary

Permit to Operate

Pursuant to

Title V

of the Clean Air Act

Issued to:

Columbia Gas Transmission,LLC
Smithfield Compressor Station
R30-10300010-2017

William F. Durham
Director

Issued: • *Effective:* Draft
Expiration: • *Renewal Application Due:*

Permit Number: **R30-10300010-2017**
Permittee: **Columbia Gas Transmission, LLC**
Facility Name: **Smithfield Compressor Station**
Permittee Mailing Address: **5151 San Felipe St., Suite 2400, Houston, TX 77056**

This permit is issued in accordance with the West Virginia Air Pollution Control Act (West Virginia Code §§ 22-5-1 et seq.) and 45CSR30 C Requirements for Operating Permits. The permittee identified at the above-referenced facility is authorized to operate the stationary sources of air pollutants identified herein in accordance with all terms and conditions of this permit.

Facility Location:	Smithfield, Wetzel County, West Virginia
Facility Mailing Address:	5151 San Felipe St., Suite 2400, Houston, TX 77056
Telephone Number:	(713) 386 3701
Type of Business Entity:	LLC
Facility Description:	Natural Gas Transmission Facility
SIC Codes:	4922
UTM Coordinates:	537.705 km Easting $ 4,370.215 km Northing $ Zone 17

Permit Writer: Engineer's Name

Any person whose interest may be affected, including, but not necessarily limited to, the applicant and any person who participated in the public comment process, by a permit issued, modified or denied by the Secretary may appeal such action of the Secretary to the Air Quality Board pursuant to article one [§§ 22B-1-1 et seq.], Chapter 22B of the Code of West Virginia. West Virginia Code §22-5-14.

Issuance of this Title V Operating Permit does not supersede or invalidate any existing permits under 45CSR13, 14 or 19, although all applicable requirements from such permits governing the facility's operation and compliance have been incorporated into the Title V Operating Permit.

Table of Contents

1.0. Emission Units and Active R13, R14, and R19 Permits 3

2.0. General Conditions 4

3.0. Facility-Wide Requirements and Permit Shield 13

Source-specific Requirements

4.0. Miscellaneous Indirect Natural Gas Heaters and Boilers less than 10 mmBtu/hr 21

5.0. 40 C.F.R. 63, Subpart ZZZZ GACT Requirements for 4SLB > 500 hp RICE 23

6.0. 40 C.F.R. 60, Subpart JJJJ Requirements for Emergency Generators 26

7.0. 40 C.F.R. 60, Subpart GG Requirements for Stationary Gas Turbines 30

8.0. 40 C.F.R. 60, Subpart KKKK Requirements for Stationary Combustion Turbines 33

9.0. 45 CSR 13, NSR Permit Requirements, R13-2064G 35

1.0 Emission Units and Active R13, R14, and R19 Permits

1.1. Emission Units

Emission Unit ID	Emission Point ID	Emission Unit Description (Make, Model, Serial No.)	Year Installed	Design Capacity	Control Device
BLR1*	BL1	Heating System Boiler; American Standard; Model # 1 BN-J-3	1963	2.284 mmBtu/hr 3.4 mmBtu/hr (R13-2064G)	N/A
HTR1*	H1	Line Heater; BS&B; Model # J-92-02	1970	0.25 MMBtu/hr	N/A
HTR2*	H2	Line Heater; Total Energy Resources Inc; Model # FAH 18-6	1999	0.5 MMBtu/hr	N/A
HTR3*	H3	Heater #3; Unknown Make; Model	2014	0.30 MMBtu/hr	N/A
09801*	E01	Reciprocating Engine/Integral Compressor; Ingersoll-Rand 410 KVGB; 4 Cycle, Lean Burn	1963	1,500 hp	N/A
09802*	E02	Reciprocating Engine/Integral Compressor; Ingersoll-Rand 410 KVGB; 4 Cycle, Lean Burn	1964	1,500 hp	N/A
09805*	E05	Turbine Engine/Centrifugal Compressor; Solar; Taurus 60-7302S	1999	6,736 hp	N/A
09806*	E06	Combustion Turbine/Compressor; Solar; Centaur 40	2015	4,213 hp @ 32°F 4,433 hp @ 0°F	N/A
~~098G2*~~	~~G2~~	~~Reciprocating Engine/Generator; Waukesha VGF-F18GL; 4 Cycle, Lean Burn~~	~~1998~~	~~250 hp~~	~~N/A~~
098G3*	G3	Reciprocating Engine/Generator; Waukesha VGF-F18GL; 4 Cycle, Lean Burn	2014	440 hp 530 hp(R13-2064G)	N/A

1.2. Active R13, R14, and R19 Permits

The underlying authority for any conditions from R13, R14, and/or R19 permits contained in this operating permit is cited using the original permit number (e.g. R13-1234). The current applicable version of such permit(s) is listed below.

Permit Number	Date of Issuance
R13-2064G	8/21/2015

2.0 General Conditions

2.1. Definitions

2.1.1. All references to the "West Virginia Air Pollution Control Act" or the "Air Pollution Control Act" mean those provisions contained in W.Va. Code §§ 22-5-1 to 22-5-18.

2.1.2. The "Clean Air Act" means those provisions contained in 42 U.S.C. §§ 7401 to 7671q, and regulations promulgated thereunder.

2.1.3. "Secretary" means the Secretary of the Department of Environmental Protection or such other person to whom the Secretary has delegated authority or duties pursuant to W.Va. Code §§ 22-1-6 or 22-1-8 (45CSR§30-2.12.). The Director of the Division of Air Quality is the Secretary's designated representative for the purposes of this permit.

2.1.4. Unless otherwise specified in a permit condition or underlying rule or regulation, all references to a “rolling yearly total” shall mean the sum of the monthly data, values or parameters being measured, monitored, or recorded, at any given time for the previous twelve (12) consecutive calendar months.

2.2. Acronyms

CAAA	Clean Air Act Amendments
CBI	Confidential Business Information
CEM	Continuous Emission Monitor
CES	Certified Emission Statement
C.F.R. *or* CFR	Code of Federal Regulations
CO	Carbon Monoxide
C.S.R. *or* CSR	Codes of State Rules
DAQ	Division of Air Quality
DEP	Department of Environmental Protection
FOIA	Freedom of Information Act
HAP	Hazardous Air Pollutant
HON	Hazardous Organic NESHAP
HP	Horsepower
lbs/hr *or* lb/hr	Pounds per Hour
LDAR	Leak Detection and Repair
m	Thousand
MACT	Maximum Achievable Control Technology
mm	Million
mmBtu/hr	Million British Thermal Units per Hour
mmft^3/hr *or* mmcf/hr	Million Cubic Feet Burned per Hour
NA *or* N/A	Not Applicable
NAAQS	National Ambient Air Quality Standards
NESHAPS	National Emissions Standards for Hazardous Air Pollutants
NO_x	Nitrogen Oxides
NSPS	New Source Performance Standards
PM	Particulate Matter
PM_{10}	Particulate Matter less than 10µm in diameter
pph	Pounds per Hour
ppm	Parts per Million
PSD	Prevention of Significant Deterioration
psi	Pounds per Square Inch
SIC	Standard Industrial Classification
SIP	State Implementation Plan
SO_2	Sulfur Dioxide
TAP	Toxic Air Pollutant
TPY	Tons per Year
TRS	Total Reduced Sulfur
TSP	Total Suspended Particulate
USEPA	United States Environmental Protection Agency
UTM	Universal Transverse Mercator
VEE	Visual Emissions Evaluation
VOC	Volatile Organic Compounds

2.3. Permit Expiration and Renewal

2.3.1. Permit duration. This permit is issued for a fixed term of five (5) years and shall expire on the date specified on the cover of this permit, except as provided in 45CSR§30-6.3.b. and 45CSR§30-6.3.c.
[45CSR§30-5.1.b.]

2.3.2. A permit renewal application is timely if it is submitted at least six (6) months prior to the date of permit expiration.
[45CSR§30-4.1.a.3.]

2.3.3. Permit expiration terminates the source's right to operate unless a timely and complete renewal application has been submitted consistent with 45CSR§30-6.2. and 45CSR§30-4.1.a.3.
[45CSR§30-6.3.b.]

2.3.4. If the Secretary fails to take final action to deny or approve a timely and complete permit application before the end of the term of the previous permit, the permit shall not expire until the renewal permit has been issued or denied, and any permit shield granted for the permit shall continue in effect during that time.
[45CSR§30-6.3.c.]

2.4. Permit Actions

2.4.1. This permit may be modified, revoked, reopened and reissued, or terminated for cause. The filing of a request by the permittee for a permit modification, revocation and reissuance, or termination, or of a notification of planned changes or anticipated noncompliance does not stay any permit condition.
[45CSR§30-5.1.f.3.]

2.5. Reopening for Cause

2.5.1. This permit shall be reopened and revised under any of the following circumstances:

a. Additional applicable requirements under the Clean Air Act or the Secretary's legislative rules become applicable to a major source with a remaining permit term of three (3) or more years. Such a reopening shall be completed not later than eighteen (18) months after promulgation of the applicable requirement. No such reopening is required if the effective date of the requirement is later than the date on which the permit is due to expire, unless the original permit or any of its terms and conditions has been extended pursuant to 45CSR§§30-6.6.a.1.A. or B.

b. Additional requirements (including excess emissions requirements) become applicable to an affected source under Title IV of the Clean Air Act (Acid Deposition Control) or other legislative rules of the Secretary. Upon approval by U.S. EPA, excess emissions offset plans shall be incorporated into the permit.

c. The Secretary or U.S. EPA determines that the permit contains a material mistake or that inaccurate statements were made in establishing the emissions standards or other terms or conditions of the permit.

d. The Secretary or U.S. EPA determines that the permit must be revised or revoked and reissued to assure compliance with the applicable requirements.

[45CSR§30-6.6.a.]

2.6. Administrative Permit Amendments

2.6.1. The permittee may request an administrative permit amendment as defined in and according to the procedures specified in 45CSR§30-6.4.
[45CSR§30-6.4.]

2.7. Minor Permit Modifications

2.7.1. The permittee may request a minor permit modification as defined in and according to the procedures specified in 45CSR§30-6.5.a.
[45CSR§30-6.5.a.]

2.8. Significant Permit Modification

2.8.1. The permittee may request a significant permit modification, in accordance with 45CSR§30-6.5.b., for permit modifications that do not qualify for minor permit modifications or as administrative amendments.
[45CSR§30-6.5.b.]

2.9. Emissions Trading

2.9.1. No permit revision shall be required, under any approved economic incentives, marketable permits, emissions trading, and other similar programs or processes for changes that are provided for in the permit and that are in accordance with all applicable requirements.
[45CSR§30-5.1.h.]

2.10. Off-Permit Changes

2.10.1. Except as provided below, a facility may make any change in its operations or emissions that is not addressed nor prohibited in its permit and which is not considered to be construction nor modification under any rule promulgated by the Secretary without obtaining an amendment or modification of its permit. Such changes shall be subject to the following requirements and restrictions:

a. The change must meet all applicable requirements and may not violate any existing permit term or condition.

b. The permittee must provide a written notice of the change to the Secretary and to U.S. EPA within two (2) business days following the date of the change. Such written notice shall describe each such change, including the date, any change in emissions, pollutants emitted and any applicable requirement that would apply as a result of the change.

c. The change shall not qualify for the permit shield.

d. The permittee shall keep records describing all changes made at the source that result in emissions of regulated air pollutants, but not otherwise regulated under the permit, and the emissions resulting from those changes.

e. No permittee may make any change subject to any requirement under Title IV of the Clean Air Act (Acid Deposition Control) pursuant to the provisions of 45CSR§30-5.9.

f. No permittee may make any changes which would require preconstruction review under any provision of Title I of the Clean Air Act (including 45CSR14 and 45CSR19) pursuant to the provisions of 45CSR§30-5.9.

[45CSR ' 30-5.9.]

2.11. Operational Flexibility

2.11.1. The permittee may make changes within the facility as provided by § 502(b)(10) of the Clean Air Act. Such operational flexibility shall be provided in the permit in conformance with the permit application and applicable requirements. No such changes shall be a modification under any rule or any provision of Title I of the Clean Air Act (including 45CSR14 and 45CSR19) promulgated by the Secretary in accordance with Title I of the Clean Air Act and the change shall not result in a level of emissions exceeding the emissions allowable under the permit.
[45CSR§30-5.8]

2.11.2. Before making a change under 45CSR§30-5.8., the permittee shall provide advance written notice to the Secretary and to U.S. EPA, describing the change to be made, the date on which the change will occur, any changes in emissions, and any permit terms and conditions that are affected. The permittee shall thereafter maintain a copy of the notice with the permit, and the Secretary shall place a copy with the permit in the public file. The written notice shall be provided to the Secretary and U.S. EPA at least seven (7) days prior to the date that the change is to be made, except that this period may be shortened or eliminated as necessary for a change that must be implemented more quickly to address unanticipated conditions posing a significant health, safety, or environmental hazard. If less than seven (7) days' notice is provided because of a need to respond more quickly to such unanticipated conditions, the permittee shall provide notice to the Secretary and U.S. EPA as soon as possible after learning of the need to make the change.
[45CSR§30-5.8.a.]

2.11.3. The permit shield shall not apply to changes made under 45CSR§30-5.8., except those provided for in 45CSR§30-5.8.d. However, the protection of the permit shield will continue to apply to operations and emissions that are not affected by the change, provided that the permittee complies with the terms and conditions of the permit applicable to such operations and emissions. The permit shield may be reinstated for emissions and operations affected by the change:

a. If subsequent changes cause the facility's operations and emissions to revert to those authorized in the permit and the permittee resumes compliance with the terms and conditions of the permit, or

b. If the permittee obtains final approval of a significant modification to the permit to incorporate the change in the permit.

[45CSR§30-5.8.c.]

2.11.4. "Section 502(b)(10) changes" are changes that contravene an express permit term. Such changes do not include changes that would violate applicable requirements or contravene enforceable permit terms and conditions that are monitoring (including test methods), recordkeeping, reporting, or compliance certification requirements.
[45CSR§30-2.39]

2.12. Reasonably Anticipated Operating Scenarios

2.12.1. The following are terms and conditions for reasonably anticipated operating scenarios identified in this permit.

a. Contemporaneously with making a change from one operating scenario to another, the permittee shall record in a log at the permitted facility a record of the scenario under which it is operating and to document the change in reports submitted pursuant to the terms of this permit and 45CSR30.

b. The permit shield shall extend to all terms and conditions under each such operating scenario; and

c. The terms and conditions of each such alternative scenario shall meet all applicable requirements and the requirements of 45CSR30.

[45CSR§30-5.1.i.]

2.13. Duty to Comply

2.13.1. The permittee must comply with all conditions of this permit. Any permit noncompliance constitutes a violation of the West Virginia Code and the Clean Air Act and is grounds for enforcement action by the Secretary or USEPA; for permit termination, revocation and reissuance, or modification; or for denial of a permit renewal application.
[45CSR§30-5.1.f.1.]

2.14. Inspection and Entry

2.14.1. The permittee shall allow any authorized representative of the Secretary, upon the presentation of credentials and other documents as may be required by law, to perform the following:

a. At all reasonable times (including all times in which the facility is in operation) enter upon the permittee's premises where a source is located or emissions related activity is conducted, or where records must be kept under the conditions of this permit;

b. Have access to and copy, at reasonable times, any records that must be kept under the conditions of this permit;

c. Inspect at reasonable times (including all times in which the facility is in operation) any facilities, equipment (including monitoring and air pollution control equipment), practices, or operations regulated or required under the permit;

d. Sample or monitor at reasonable times substances or parameters to determine compliance with the permit or applicable requirements or ascertain the amounts and types of air pollutants discharged.

[45CSR§30-5.3.b.]

2.15. Schedule of Compliance

2.15.1. For sources subject to a compliance schedule, certified progress reports shall be submitted consistent with the applicable schedule of compliance set forth in this permit and 45CSR§30-4.3.h., but at least every six (6) months, and no greater than once a month, and shall include the following:

a. Dates for achieving the activities, milestones, or compliance required in the schedule of compliance, and dates when such activities, milestones or compliance were achieved; and

b. An explanation of why any dates in the schedule of compliance were not or will not be met, and any preventative or corrective measure adopted.

[45CSR§30-5.3.d.]

2.16. Need to Halt or Reduce Activity not a Defense

2.16.1. It shall not be a defense for a permittee in an enforcement action that it would have been necessary to halt or reduce the permitted activity in order to maintain compliance with the conditions of this permit. However, nothing in this paragraph shall be construed as precluding consideration of a need to halt or reduce activity as a mitigating factor in determining penalties for noncompliance if the health, safety, or environmental impacts of halting or reducing operations would be more serious than the impacts of continued operations.
[45CSR§30-5.1.f.2.]

2.17. Emergency

2.17.1. An "emergency" means any situation arising from sudden and reasonably unforeseeable events beyond the control of the source, including acts of God, which situation requires immediate corrective action to restore normal operation, and that causes the source to exceed a technology-based emission limitation under the permit, due to unavoidable increases in emissions attributable to the emergency. An emergency shall not include noncompliance to the extent caused by improperly designed equipment, lack of preventative maintenance, careless or improper operation, or operator error.
[45CSR§30-5.7.a.]

2.17.2. Effect of any emergency. An emergency constitutes an affirmative defense to an action brought for noncompliance with such technology-based emission limitations if the conditions of 45CSR§30-5.7.c. are met.
[45CSR§30-5.7.b.]

2.17.3. The affirmative defense of emergency shall be demonstrated through properly signed, contemporaneous operating logs, or other relevant evidence that:

a. An emergency occurred and that the permittee can identify the cause(s) of the emergency;

b. The permitted facility was at the time being properly operated;

c. During the period of the emergency the permittee took all reasonable steps to minimize levels of emissions that exceeded the emission standards, or other requirements in the permit; and

d. Subject to the requirements of 45CSR§30-5.1.c.3.C.1, the permittee submitted notice of the emergency to the Secretary within one (1) working day of the time when emission limitations were exceeded due to the emergency and made a request for variance, and as applicable rules provide. This notice, report, and variance request fulfills the requirement of 45CSR§30-5.1.c.3.B. This notice must contain a detailed description of the emergency, any steps taken to mitigate emissions, and corrective actions taken.

[45CSR§30-5.7.c.]

2.17.4. In any enforcement proceeding, the permittee seeking to establish the occurrence of an emergency has the burden of proof.
[45CSR§30-5.7.d.]

2.17.5. This provision is in addition to any emergency or upset provision contained in any applicable requirement.
[45CSR§30-5.7.e.]

2.18. Federally-Enforceable Requirements

2.18.1. All terms and conditions in this permit, including any provisions designed to limit a source's potential to emit and excepting those provisions that are specifically designated in the permit as "State-enforceable only", are enforceable by the Secretary, USEPA, and citizens under the Clean Air Act.
[45CSR§30-5.2.a.]

2.18.2. Those provisions specifically designated in the permit as “State-enforceable only” shall become “Federally-enforceable” requirements upon SIP approval by the USEPA.

2.19. Duty to Provide Information

2.19.1. The permittee shall furnish to the Secretary within a reasonable time any information the Secretary may request in writing to determine whether cause exists for modifying, revoking and reissuing, or terminating the permit or to determine compliance with the permit. Upon request, the permittee shall also furnish to the Secretary copies of records required to be kept by the permittee. For information claimed to be confidential, the permittee shall furnish such records to the Secretary along with a claim of confidentiality in accordance with 45CSR31. If confidential information is to be sent to USEPA, the permittee shall directly provide such information to USEPA along with a claim of confidentiality in accordance with 40 C.F.R. Part 2.
[45CSR§30-5.1.f.5.]

2.20. Duty to Supplement and Correct Information

2.20.1. Upon becoming aware of a failure to submit any relevant facts or a submittal of incorrect information in any permit application, the permittee shall promptly submit to the Secretary such supplemental facts or corrected information.
[45CSR§30-4.2.]

2.21. Permit Shield

2.21.1. Compliance with the conditions of this permit shall be deemed compliance with any applicable requirements as of the date of permit issuance provided that such applicable requirements are included and are specifically identified in this permit or the Secretary has determined that other requirements specifically identified are not applicable to the source and this permit includes such a determination or a concise summary thereof.
[45CSR§30-5.6.a.]

2.21.2. Nothing in this permit shall alter or affect the following:

a. The liability of an owner or operator of a source for any violation of applicable requirements prior to or at the time of permit issuance; or

b. The applicable requirements of the Code of West Virginia and Title IV of the Clean Air Act (Acid Deposition Control), consistent with § 408 (a) of the Clean Air Act.

c. The authority of the Administrator of U.S. EPA to require information under § 114 of the Clean Air Act or to issue emergency orders under § 303 of the Clean Air Act.

[45CSR§30-5.6.c.]

2.22. Credible Evidence

2.22.1. Nothing in this permit shall alter or affect the ability of any person to establish compliance with, or a violation of, any applicable requirement through the use of credible evidence to the extent authorized by law. Nothing in this permit shall be construed to waive any defenses otherwise available to the permittee including but not limited to any challenge to the credible evidence rule in the context of any future proceeding.
[45CSR§30-5.3.e.3.B. and 45CSR38]

2.23. Severability

2.23.1. The provisions of this permit are severable. If any provision of this permit, or the application of any provision of this permit to any circumstance is held invalid by a court of competent jurisdiction, the remaining permit terms and conditions or their application to other circumstances shall remain in full force and effect.
[45CSR§30-5.1.e.]

2.24. Property Rights

2.24.1. This permit does not convey any property rights of any sort or any exclusive privilege.
[45CSR§30-5.1.f.4]

2.25. Acid Deposition Control

2.25.1. Emissions shall not exceed any allowances that the source lawfully holds under Title IV of the Clean Air Act (Acid Deposition Control) or rules of the Secretary promulgated thereunder.

a. No permit revision shall be required for increases in emissions that are authorized by allowances acquired pursuant to the acid deposition control program, provided that such increases do not require a permit revision under any other applicable requirement.

b. No limit shall be placed on the number of allowances held by the source. The source may not, however, use allowances as a defense to noncompliance with any other applicable requirement.

c. Any such allowance shall be accounted for according to the procedures established in rules promulgated under Title IV of the Clean Air Act.

[45CSR§30-5.1.d.]

2.25.2. Where applicable requirements of the Clean Air Act are more stringent than any applicable requirement of regulations promulgated under Title IV of the Clean Air Act (Acid Deposition Control), both provisions shall be incorporated into the permit and shall be enforceable by the Secretary and U. S. EPA.
[45CSR§30-5.1.a.2.]

3.0 Facility-Wide Requirements

3.1. Limitations and Standards

3.1.1. **Open burning.** The open burning of refuse by any person is prohibited except as noted in 45CSR§6-3.1. **[45CSR§6-3.1.]**

3.1.2. **Open burning exemptions.** The exemptions listed in 45CSR§6-3.1 are subject to the following stipulation: Upon notification by the Secretary, no person shall cause or allow any form of open burning during existing or predicted periods of atmospheric stagnation. Notification shall be made by such means as the Secretary may deem necessary and feasible.
[45CSR§6-3.2.]

3.1.3. **Asbestos.** The permittee is responsible for thoroughly inspecting the facility, or part of the facility, prior to commencement of demolition or renovation for the presence of asbestos and complying with 40 C.F.R. § 61.145, 40 C.F.R. § 61.148, and 40 C.F.R. § 61.150. The permittee, owner, or operator must notify the Secretary at least ten (10) working days prior to the commencement of any asbestos removal on the forms prescribed by the Secretary if the permittee is subject to the notification requirements of 40 C.F.R. § 61.145(b)(3)(i). The USEPA, the Division of Waste Management and the Bureau for Public Health - Environmental Health requires a copy of this notice to be sent to them.
[40 C.F.R. §61.145(b) and 45CSR34]

3.1.4. **Odor.** No person shall cause, suffer, allow or permit the discharge of air pollutants which cause or contribute to an objectionable odor at any location occupied by the public.
[45CSR§4-3.1 State-Enforceable only.]

3.1.5. **Standby plan for reducing emissions.** When requested by the Secretary, the permittee shall prepare standby plans for reducing the emissions of air pollutants in accordance with the objectives set forth in Tables I, II, and III of 45CSR11.
[45CSR§11-5.2]

3.1.6. **Emission inventory.** The permittee is responsible for submitting, on an annual basis, an emission inventory in accordance with the submittal requirements of the Division of Air Quality.
[W.Va. Code § 22-5-4(a)(14)]

3.1.7. **Ozone-depleting substances.** For those facilities performing maintenance, service, repair or disposal of appliances, the permittee shall comply with the standards for recycling and emissions reduction pursuant to 40 C.F.R. Part 82, Subpart F, except as provided for Motor Vehicle Air Conditioners (MVACs) in Subpart B:

a. Persons opening appliances for maintenance, service, repair, or disposal must comply with the prohibitions and required practices pursuant to 40 C.F.R. §§ 82.154 and 82.156.

b. Equipment used during the maintenance, service, repair, or disposal of appliances must comply with the standards for recycling and recovery equipment pursuant to 40 C.F.R. § 82.158.

c. Persons performing maintenance, service, repair, or disposal of appliances must be certified by an approved technician certification program pursuant to 40 C.F.R. § 82.161.

[40 C.F.R. 82, Subpart F]

3.1.8. **Risk Management Plan.** Should this stationary source, as defined in 40 C.F.R. § 68.3, become subject to Part 68, then the owner or operator shall submit a risk management plan (RMP) by the date specified in 40 C.F.R. § 68.10 and shall certify compliance with the requirements of Part 68 as part of the annual compliance certification as required by 40 C.F.R. Part 70 or 71.
[40 C.F.R. 68]

3.1.9. No person shall cause, suffer, allow or permit fugitive particulate matter to be discharged beyond the boundary lines of the property on which the discharge originates or at any public or residential location, which causes or contributes to statutory air pollution.
[45CSR§17-3.1; State Enforceable Only]

3.2. Monitoring Requirements

3.2.1. Reserved

3.3. Testing Requirements

3.3.1. **Stack testing.** As per provisions set forth in this permit or as otherwise required by the Secretary, in accordance with the West Virginia Code, underlying regulations, permits and orders, the permittee shall conduct test(s) to determine compliance with the emission limitations set forth in this permit and/or established or set forth in underlying documents. The Secretary, or his duly authorized representative, may at his option witness or conduct such test(s). Should the Secretary exercise his option to conduct such test(s), the operator shall provide all necessary sampling connections and sampling ports to be located in such manner as the Secretary may require, power for test equipment and the required safety equipment, such as scaffolding, railings and ladders, to comply with generally accepted good safety practices. Such tests shall be conducted in accordance with the methods and procedures set forth in this permit or as otherwise approved or specified by the Secretary in accordance with the following:

a. The Secretary may on a source-specific basis approve or specify additional testing or alternative testing to the test methods specified in the permit for demonstrating compliance with 40 C.F.R. Parts 60, 61, and 63, if applicable, in accordance with the Secretary's delegated authority and any established equivalency determination methods which are applicable.

b. The Secretary may on a source-specific basis approve or specify additional testing or alternative testing to the test methods specified in the permit for demonstrating compliance with applicable requirements which do not involve federal delegation. In specifying or approving such alternative testing to the test methods, the Secretary, to the extent possible, shall utilize the same equivalency criteria as would be used in approving such changes under Section 3.3.1.a. of this permit.

c. All periodic tests to determine mass emission limits from or air pollutant concentrations in discharge stacks and such other tests as specified in this permit shall be conducted in accordance with an approved test protocol. Unless previously approved, such protocols shall be submitted to the Secretary in writing at least thirty (30) days prior to any testing and shall contain the information set forth by the Secretary. In addition, the permittee shall notify the Secretary at least fifteen (15) days prior to any testing so the Secretary may have the opportunity to observe such tests. This notification shall include the actual date and time during which the test will be conducted and, if appropriate, verification that the tests will fully conform to a referenced protocol previously approved by the Secretary.

d. The permittee shall submit a report of the results of the stack test within 60 days of completion of the test. The test report shall provide the information necessary to document the objectives of the test and to determine whether proper procedures were used to accomplish these objectives. The report shall include the following: the certification described in paragraph 3.5.1; a statement of compliance status, also signed by a responsible official; and, a summary of conditions which form the basis for the compliance status evaluation. The summary of conditions shall include the following:

1. The permit or rule evaluated, with the citation number and language.

2. The result of the test for each permit or rule condition.

3. A statement of compliance or non-compliance with each permit or rule condition.

[WV Code §§ 22-5-4(a)(14-15) and 45CSR13]

3.4. Recordkeeping Requirements

3.4.1. **Monitoring information.** The permittee shall keep records of monitoring information that include the following:

a. The date, place as defined in this permit and time of sampling or measurements;

b. The date(s) analyses were performed;

c. The company or entity that performed the analyses;

d. The analytical techniques or methods used;

e. The results of the analyses; and

f. The operating conditions existing at the time of sampling or measurement.

[45CSR§30-5.1.c.2.A.]

3.4.2. **Retention of records.** The permittee shall retain records of all required monitoring data and support information for a period of at least five (5) years from the date of monitoring sample, measurement, report, application, or record creation date. Support information includes all calibration and maintenance records and all original strip-chart recordings for continuous monitoring instrumentation, and copies of all reports required by the permit. Where appropriate, records may be maintained in computerized form in lieu of the above records.
[45CSR§30-5.1.c.2.B.]

3.4.3. **Odors.** For the purposes of 45CSR4, the permittee shall maintain a record of all odor complaints received, any investigation performed in response to such a complaint, and any responsive action(s) taken.
[45CSR§30-5.1.c. State-Enforceable only.]

3.5. Reporting Requirements

3.5.1. **Responsible official.** Any application form, report, or compliance certification required by this permit to be submitted to the DAQ and/or USEPA shall contain a certification by the responsible official that states that, based on information and belief formed after reasonable inquiry, the statements and information in the document are true, accurate and complete.
[45CSR§§30-4.4. *and* 5.1.c.3.D.]

3.5.2. A permittee may request confidential treatment for the submission of reporting required under 45CSR§30-5.1.c.3. pursuant to the limitations and procedures of W.Va. Code § 22-5-10 and 45CSR31.
[45CSR§30-5.1.c.3.E.]

3.5.3. Except for the electronic submittal of the annual certification to the USEPA as required in 3.5.5 below, all notices, requests, demands, submissions and other communications required or permitted to be made to the Secretary of DEP and/or USEPA shall be made in writing and shall be deemed to have been duly given when delivered by hand, mailed first class or by private carrier with postage prepaid to the address(es) set forth below or to such other person or address as the Secretary of the Department of Environmental Protection may designate:

If to the DAQ:

Director
WVDEP
Division of Air Quality
601 57th Street SE
Charleston, WV 25304

Phone: 304/926-0475
FAX: 304/926-0478

If to the US EPA:

Associate Director
Office of Air Enforcement and Compliance Assistance (3AP20)
U. S. Environmental Protection Agency
Region III
1650 Arch Street
Philadelphia, PA 19103-2029

3.5.4. **Certified emissions statement.** The permittee shall submit a certified emissions statement and pay fees on an annual basis in accordance with the submittal requirements of the Division of Air Quality.
[45CSR§30-8.]

3.5.5. **Compliance certification.** The permittee shall certify compliance with the conditions of this permit on the forms provided by the DAQ. In addition to the annual compliance certification, the permittee may be required to submit certifications more frequently under an applicable requirement of this permit. The annual certification shall be submitted to the DAQ and USEPA on or before March 15 of each year, and shall certify compliance for the period ending December 31. The annual certification to the USEPA shall be submitted in electronic format only. It shall be submitted by e-mail to the following address: R3_APD_Permits@epa.gov. The permittee shall maintain a copy of the certification on site for five (5) years from submittal of the certification.
[45CSR§30-5.3.e.]

3.5.6. **Semi-annual monitoring reports.** The permittee shall submit reports of any required monitoring on or before September 15 for the reporting period January 1 to June 30 and on or before March 15 for the reporting period July 1 to December 31. All instances of deviation from permit requirements must be clearly identified in such reports. All required reports must be certified by a responsible official consistent with 45CSR§30-4.4.
[45CSR§30-5.1.c.3.A.]

3.5.7. **Emergencies.** For reporting emergency situations, refer to Section 2.17 of this permit.

3.5.8. **Deviations.**

a. In addition to monitoring reports required by this permit, the permittee shall promptly submit supplemental reports and notices in accordance with the following:

1. Any deviation resulting from an emergency or upset condition, as defined in 45CSR§30-5.7., shall be reported by telephone or telefax within one (1) working day of the date on which the permittee becomes aware of the deviation, if the permittee desires to assert the affirmative defense in accordance with 45CSR§30-5.7. A written report of such deviation, which shall include the probable cause of such deviations, and any corrective actions or preventative measures taken, shall be submitted and certified by a responsible official within ten (10) days of the deviation.

2. Any deviation that poses an imminent and substantial danger to public health, safety, or the environment shall be reported to the Secretary immediately by telephone or telefax. A written report of such deviation, which shall include the probable cause of such deviation, and any corrective actions or preventative measures taken, shall be submitted by the responsible official within ten (10) days of the deviation.

3. Deviations for which more frequent reporting is required under this permit shall be reported on the more frequent basis.

4. All reports of deviations shall identify the probable cause of the deviation and any corrective actions or preventative measures taken.

[45CSR§30-5.1.c.3.C.]

b. The permittee shall, in the reporting of deviations from permit requirements, including those attributable to upset conditions as defined in this permit, report the probable cause of such deviations and any corrective actions or preventive measures taken in accordance with any rules of the Secretary.
[45CSR§30-5.1.c.3.B.]

3.5.9. **New applicable requirements.** If any applicable requirement is promulgated during the term of this permit, the permittee will meet such requirements on a timely basis, or in accordance with a more detailed schedule if required by the applicable requirement.
[45CSR§30-4.3.h.1.B.]

3.6. Compliance Plan

3.6.1. None

3.7. Permit Shield

3.7.1. The permittee is hereby granted a permit shield in accordance with 45CSR§30-5.6. The permit shield applies provided the permittee operates in accordance with the information contained within this permit.

3.7.2. The following requirements specifically identified are not applicable to the source based on the determinations set forth below. The permit shield shall apply to the following requirements provided the conditions of the determinations are met.

45CSR4	*To Prevent and Control the Discharge of Air Pollutants into the Open Air Which Cause or Contributes to an Objectionable Odor or Odors:* This State Rule shall not apply to the following source of objectionable odor until such time as feasible control methods are developed: Internal combustion engines.
45CSR10	*To Prevent and Control Air Pollution from the Emission of Sulfur Dioxide* – This State Rule is not applicable to the facility's boiler and heaters because the maximum design heat input (MDHI) is less than 10 mmBtu/hr
45CSR21	*To Prevent and Control Air Pollution from the Emission of Volatile Organic Compounds:* All storage tanks at the station, are listed as insignificant sources and are below 40,000 gallons in capacity, which exempts the facility from 45CSR§21-28. The compressor station is not engaged in the extraction or fractionation of natural gas which exempts the facility from 45CSR§21-29. Additionally this site is not located within one of the five designated VOC maintenance counties (Cabell, Kanawha, Putnam, Wayne & Wood)
45CSR27	*To Prevent and Control the Emissions of Toxic Air Pollutants:* Natural gas is included as a petroleum product and contains less than 5% benzene by weight. 45CSR§27-2.4 exempts equipment "used in the production and distribution of petroleum products providing that such equipment does not produce or contact materials containing more than 5% benzene by weight."
40 C.F.R. Part 60 Subpart Dc	*Standards of Performance for Steam Generating Units:* There are no fuel burning steam generating units operated at this facility and therefore the site has not affected sources that would meet applicability threshold defined within [40CFR§60.40c (a)].
40 C.F.R. Part 60 Subpart OOOO	*Standards of Performance for Crude Oil and Natural Gas Production, Transmission, and Distribution for which Construction, Modification, or Reconstruction Commenced after August 23, 2011 and on or before September 18, 2015.* The Storage Vessel requirements defined for transmission sources is not applicable to this site because all vessels commenced construction, prior to August 23, 2011 as stated in accordance with [40CFR§60.5365(e)]. No other affected sources were identified at this site.
40 C.F.R. Part 60 Subpart OOOOa	*Standards of Performance for Crude Oil and Natural Facilities for which Construction, Modification, or Reconstruction Commenced after September 18, 2015.* The GHG and VOC requirements defined by this NSPS are not applicable to this site because all affected sources commenced constructed prior to September 18, 2015 in accordance with the applicability criteria defined within [40CFR§60.5365a]
40 C.F.R. Part 60 Subpart K and Ka	*Standards of Performance for Petroleum Liquid Storage Vessels.* All storage vessel tanks at the station are below the applicability criteria of 40,000 gallons in capacity as stated in [40CFR§60.110a(a)]
40 C.F.R. Part 60 Subpart Kb	*Standards of Performance for Petroleum Liquid Storage Vessels.* All tanks at the station are below the applicability criteria of 19,813 gallons in capacity as stated in [40CFR60.110b(a)]
40 C.F.R. Part 60 Subpart KKK	*Standards of Performance for Equipment Leaks of VOC From Onshore Natural Gas Processing Plant(s).* The station is not engaged in the

	extraction or fractionation of natural gas liquids from field gas, the fractionation of mixed natural gas liquids from field gas, the fractionation of mixed natural gas liquids to natural gas products, or both. As a result, the station has no affected sources operating within this source category.
40 C.F.R. Part 60 Subpart IIII	*Standards of Performance for Stationary Compression Ignition Internal Combustion Engines.* The station does not utilize compression ignition internal combustion engines.
40 C.F.R. Part 63 Subpart HHH	*National Emission Standards for Hazardous Air Pollutants from Natural Gas Transmission and Storage Facilities.* The station is not subject to Subpart HHH since the station does not utilize dehydration and is not a major source of HAPs.
40 C.F.R. Part 63 Subpart YYYY	The provisions of this subpart are not applicable because although turbines have been installed at this minor HAP source the control requirements of this regulation for natural gas fired units was stayed by USEPA. Initial Notification Requirements are all that apply.
40 C.F.R. Part 63 Subpart DDDDD	*National Emission Standards for Hazardous Air Pollutants for Industrial, Commercial, and Institutional Boilers and Process Heaters.* The provisions of this subpart do not apply to this Station since it does not exceed major source HAP thresholds as defined in 40CFR§63.7575.
40 C.F.R. Part 63 Subpart JJJJJJ	*National Emission Standards for Hazardous Air Pollutants for Industrial, Commercial, and Institutional Boilers Area Sources.* The facility is not subject to 40 C.F.R. Part 63 Subpart JJJJJJ since the line heaters and boiler are fueled by natural gas as defined in 40CFR§63.11195(e)
40 C.F.R. Part 64	*Compliance Assurance Monitoring.* The compliance assurance monitoring provisions of Part 64 are not applicable due there being no add-on controls at this facility. [40CFR§64.2(a)(2)]

3.8. Emergency Operating Scenario

For emergency situations which interrupt the critical supply of natural gas to the public, and which pose a life threatening circumstance to the customer, the permittee is allowed to temporarily replace failed engine(s) as long as all of the following conditions are met:

a. The replacement engine(s) is only allowed to operate until repair of the failed engine(s) is complete, but under no circumstance may the replacement engine(s) operate in excess of sixty (60) days;

b. Both the replacement engine(s) and the repaired failed engine(s) shall not operate at the same time with the exception of any necessary testing of the repaired engine(s) and this testing may not exceed five (5) hours;

c. Potential hourly emissions from the replacement engine(s) are less than or equal to the potential hourly emissions from the engine(s) being replaced;

d. Credible performance emission test data verifying the emission rates associated with the operation of the substitute engine shall be submitted to the Director within five (5) days;

e. The permittee must provide written notification to the Director within five (5) days of the replacement. This notification must contain:

   i. Information to support the claim of life threatening circumstances to justify applicability of this emergency provision;

ii. Identification of the engine(s) being temporarily replaced;

iii. The design parameters of the replacement engine(s) including, but not limited to, the design horsepower and emission factors;

iv. Projected duration of the replacement engine(s); and

v. The appropriate certification by a responsible official.

[45CSR§30-12.7]

4.0 Miscellaneous Indirect Natural Gas Heaters and Boilers less than 10 MMBtu/hr [Emission Unit ID(s): (BLR1, HTR1, HTR2 & HTR3)]

4.1. Limitations and Standards

4.1.1. No person shall cause, suffer, allow or permit emission of smoke and/or particulate matter into the open air from any fuel burning unit which is greater than ten (10) percent opacity based on a six minute block average.
[45CSR§2-3.1. & 45CSR13, Permit R13-2064G, Condition 6.1.2]

4.2. Monitoring Requirements

4.2.1. At such reasonable times as the Secretary may designate, the permittee shall conduct visible emissions observations using Method 22 for the purpose of demonstrating compliance with Section 4.1.1. If visible emissions are observed, the permittee shall conduct a Method 9 reading unless the cause for visible emissions is corrected within 24 hours. Records of observation will be kept for at least 5 years from the date of observation.
[45CSR§30-5.1.c. & 45CSR13, Permit R13-2064G, Condition 6.2.1]

4.3. Testing Requirements

4.3.1. Compliance with the visible emission requirements of 45CSR§2-3.1 (Section 4.1.1 of this permit) shall be determined in accordance with 40 C.F.R. Part 60, Appendix A, Method 9 or by using measurements from continuous opacity monitoring systems approved by the Director. The Director may require the installation, calibration, maintenance and operation of continuous opacity monitoring systems and may establish policies for the evaluation of continuous opacity monitoring results and the determination of compliance with the visible emission requirements of 45CSR§2-3.1 (Section 4.1.1 of this permit). Continuous opacity monitors shall not be required on fuel burning units which employ wet scrubbing systems for emission control.
[45CSR§30-5.1.c. & 45CSR13, Permit R13-2064G, Condition 6.2.1]

4.4. Recordkeeping Requirements

4.4.1. The permittee shall maintain records of all monitoring data required by permit condition 4.2.1 documenting the date and time of each visible emission check, the emission point or equipment/source identification number, the name or means of identification of the observer, the results of the check(s), whether the visible emissions are normal for the process, and, if applicable, all corrective measures taken or planned. The registrant shall also record the general weather conditions (i.e. sunny, approximately 80°F, 6- 10 mph NE wind) during the visual emission check(s). Should a visible emission observation be required to be performed per the requirements specified in Method 9, the data records of each observation shall be maintained per the requirements of Method 9.
[45CSR13, Permit R13-2064G, Condition 6.4.1]

4.5. Reporting Requirements

4.5.1. Any deviation(s) from the allowable visible emission requirement for any emissions source discovered during observations using 40 CFR Part 60, Appendix A, Method 9 or 22 shall be reported in writing to the Director of the Division of Air Quality as soon as practicable, but in any case within ten (10) calendar days of the occurrence and shall include at least the following information: the results of the visible

determination of opacity of emissions, the cause or suspected cause of the violation(s), and any corrective measures taken or planned

[45CSR13, Permit R13-2064G, Condition 6.5.1]

5.0 40 C.F.R. 63, Subpart ZZZZ GACT Requirements for 4SLB > 500 Hp Reciprocating Internal Combustion Engine(s) RICE [Emission Unit ID(s): (09801 & 09802)]

5.1 Limitations and Standards

5.1.1. As stated in 40 C.F.R. §§63.6603, the permittee must comply with the following requirements from Table 2d for existing stationary RICE located at area sources of HAP emissions:

For each . . .	The permittee must meet the following requirements, except during periods of startup . . .
Non-Emergency, Non-Black Start 4SLB Remote Stationary RICE > 500 Hp	Change oil and filter every 2,160 hours of operation or annually, whichever comes first;[1]
	Inspect spark plugs every 2,160 hours of operation or annually, whichever comes first, and replace as necessary; and
	Inspect all hoses and belts every 2,160 hours of operation or annually, whichever comes first, and replace as necessary.

[1]Sources have the option to utilize an oil analysis program as described in 40 C.F.R. §**63**.6625(i) or (j) in order to extend the specified oil change requirement in Table 2d of this subpart.

[40 C.F.R.§63.6603, & Table 2d, Item 8]

5.1.2. The permittee must comply with the applicable operating limitations in this section no later than October 19, 2013.
[40 C.F.R.§63.6595(a)(1) & 45CSR13, Permit R13-2064G, Condition 9.1.1]

5.1.3. The permittee shall comply with the following general requirements:

a. The permittee must be in compliance with the operating limitations in this subpart that apply to the permittee at all times.

b. At all times the permittee must operate and maintain any affected source, including associated air pollution control equipment and monitoring equipment, in a manner consistent with safety and good air pollution control practices for minimizing emissions. The general duty to minimize emissions does not require the permittee to make any further efforts to reduce emissions if required levels have been achieved. Determination of whether such operation and maintenance procedures are being used will be based on information available to the Administrator which may include, but is not limited to, monitoring results, review of operation and maintenance procedures, review of operation and maintenance records, and inspection of the source.

[40 C.F.R. §63.6605]

5.1.4. The permittee shall demonstrate continuous compliance by doing the following:

a. The permittee must demonstrate continuous compliance with each emission limitation and operating limitation in Table 2d to 40 C.F.R. 63, Subpart ZZZZ that apply to the permittee according to methods specified in Table 6 to 40 C.F.R. 63, Subpart ZZZZ.

Table 6 states that for work or management practices the permittee shall operate and maintain the stationary RICE according to the manufacturer's emission related operation and maintenance instructions; or develop and follow your own maintenance plan which must provide to the extent practicable for the maintenance and operation of the engine in a manner consistent with good air pollution control practice for minimizing emissions.
[40 C.F.R. § 63.6640(a)]

5.1.5. The permittee shall comply with all General Provisions which apply according to Table 8 to 40 C.F.R., Part 63, Subpart ZZZZ.
[40 C.F.R. § 63.6665]

5.2. Monitoring Requirements

5.2.1. This facility is subject to the following requirements:

a. The permittee must operate and maintain the stationary RICE and after-treatment control device (if any) according to the manufacturer's emission-related written instructions or develop your own maintenance plan which must provide to the extent practicable for the maintenance and operation of the engine in a manner consistent with good air pollution control practice for minimizing emissions.
[40 C.F.R. §63.6625(e)(5)]

b. If you operate a new, reconstructed, or existing stationary engine, you must minimize the engine's time spent at idle during startup and minimize the engine's startup time to a period needed for appropriate and safe loading of the engine, not to exceed 30 minutes, after which time the emission standards applicable to all times other than startup in Tables 1a, 2a, 2c, and 2d to this subpart apply.
[40 C.F.R. §63.6625(h)]

d. If you own or operate a stationary SI engine that is subject to the work, operation or management practices in items 6, 7, or 8 of Table 2c to this subpart or in items 5, 6, 7, 9, or 11 of Table 2d to this subpart, you have the option of utilizing an oil analysis program in order to extend the specified oil change requirement in Tables 2c and 2d to this subpart. The oil analysis must be performed at the same frequency specified for changing the oil in Table 2c or 2d to this subpart. The analysis program must at a minimum analyze the following three parameters: Total Acid Number, viscosity, and percent water content. The condemning limits for these parameters are as follows: Total Acid Number increases by more than 3.0 milligrams of potassium hydroxide (KOH) per gram from Total Acid Number of the oil when new; viscosity of the oil has changed by more than 20 percent from the viscosity of the oil when new; or percent water content (by volume) is greater than 0.5. If all of these condemning limits are not exceeded, the engine owner or operator is not required to change the oil. If any of the limits are exceeded, the engine owner or operator must change the oil within 2 days of receiving the results of the analysis; if the engine is not in operation when the results of the analysis are received, the engine owner or operator must change the oil within 2 days or before commencing operation, whichever is later. The owner or operator must keep records of the parameters that are analyzed as part of the program, the results of the analysis, and the oil changes for the engine. The analysis program must be part of the maintenance plan for the engine.
[40 C.F.R. §63.6625(j)]

[40 C.F.R. § 63.6625]

5.3. Testing Requirements

5.3.1. Reserved

5.4. Recordkeeping Requirements

5.4.1. The permittee shall keep the records required in Table 6 of this subpart to show continuous compliance with each emission or operating limitation that applied.
[40 CFR §63.6655(d), Table 6 (Item 9)]

5.4.2. The permittee must keep records of the maintenance conducted on each stationary RICE in order to demonstrate that the permittee operated and maintained each stationary RICE and after-treatment control device (if any) according to the permittee's own maintenance plan.
[40 CFR §63.6655(e)(3)]

5.5. Reporting Requirements

5.5.1. N/A

5.6. Compliance Plan

5.6.1 N/A

6.0 40 C.F.R. 60, Subpart JJJJ Requirements for Emergency Generators [Emission Unit ID: (G3)]

6.1 Limitations and Standards

6.1.1. Emissions from Emergency Generator G3 shall not exceed the following:

NSPS JJJJ –Limits	NOx	CO	VOC
Standard (g/Hp hr) or	2.0	4.0	1.0
ppm_{vd} @ 15% O_2	160	540	86

[**40 CFR §60.4233(e)]**

6.1.2. Owners and operators of stationary SI ICE must operate and maintain stationary SI ICE that achieve the emission standards as required in §60.4233 over the entire life of the engine.
[**40CFR§60.4234 & 45CSR13, Permit R13-2064G, Condition 8.2.3)**]

6.1.3. (a) Starting on July 1, 2010, if the emergency stationary SI internal combustion engine that is greater than or equal to 500 HP that was built on or after July 1, 2010, does not meet the standards applicable to non-emergency engines, the owner or operator must install a non-resettable hour meter.
[40 C.F.R. §60.4237(a)]

6.1.4. (d) If you own or operate an emergency stationary ICE, you must operate the emergency stationary ICE according to the requirements in paragraphs (d)(1) through (3) of this section. In order for the engine to be considered an emergency stationary ICE under this subpart, any operation other than emergency operation, maintenance and testing, emergency demand response, and operation in non-emergency situations for 50 hours per year, as described in paragraphs (d)(1) through (3) of this section, is prohibited. If you do not operate the engine according to the requirements in paragraphs (d)(1) through (3) of this section, the engine will not be considered an emergency engine under this subpart and must meet all requirements for non-emergency engines.

(1) There is no time limit on the use of emergency stationary ICE in emergency situations.

(2) You may operate your emergency stationary ICE for any combination of the purposes specified in paragraphs (d)(2)(i) through (iii) of this section for a maximum of 100 hours per calendar year. Any operation for non-emergency situations as allowed by paragraph (d)(3) of this section counts as part of the 100 hours per calendar year allowed by this paragraph (d)(2).

(i) Emergency stationary ICE may be operated for maintenance checks and readiness testing, provided that the tests are recommended by federal, state or local government, the manufacturer, the vendor, the regional transmission organization or equivalent balancing authority and transmission operator, or the insurance company associated with the engine. The owner or operator may petition the Administrator for approval of additional hours to be used for maintenance checks and readiness testing, but a petition is not required if the owner or operator maintains records indicating that federal, state, or local standards require maintenance and testing of emergency ICE beyond 100 hours per calendar year.

(ii) Emergency stationary ICE may be operated for emergency demand response for periods in which the Reliability Coordinator under the North American Electric Reliability Corporation (NERC) Reliability Standard EOP-002-3, Capacity and Energy Emergencies (incorporated by reference, see

§60.17), or other authorized entity as determined by the Reliability Coordinator, has declared an Energy Emergency Alert Level 2 as defined in the NERC Reliability Standard EOP-002-3.

(iii) Emergency stationary ICE may be operated for periods where there is a deviation of voltage or frequency of 5 percent or greater below standard voltage or frequency.

(3) Emergency stationary ICE may be operated for up to 50 hours per calendar year in non-emergency situations. The 50 hours of operation in non-emergency situations are counted as part of the 100 hours per calendar year for maintenance and testing and emergency demand response provided in paragraph (d)(2) of this section. Except as provided in paragraph (d)(3)(i) of this section, the 50 hours per year for non-emergency situations cannot be used for peak shaving or non-emergency demand response, or to generate income for a facility to an electric grid or otherwise supply power as part of a financial arrangement with another entity.

(i) The 50 hours per year for non-emergency situations can be used to supply power as part of a financial arrangement with another entity if all of the following conditions are met:

(A) The engine is dispatched by the local balancing authority or local transmission and distribution system operator;
(B) The dispatch is intended to mitigate local transmission and/or distribution limitations so as to avert potential voltage collapse or line overloads that could lead to the interruption of power supply in a local area or region.
(C) The dispatch follows reliability, emergency operation or similar protocols that follow specific NERC, regional, state, public utility commission or local standards or guidelines.
(D) The power is provided only to the facility itself or to support the local transmission and distribution system.
(E) The owner or operator identifies and records the entity that dispatches the engine and the specific NERC, regional, state, public utility commission or local standards or guidelines that are being followed for dispatching the engine. The local balancing authority or local transmission and distribution system operator may keep these records on behalf of the engine owner or operator.

[40 C.F.R. § 60.4243(d) & 45CSR13, Permit R13-2064G, Condition 8.3.2]

6.2. Monitoring Requirements

6.2.1. (b) For all stationary SI emergency ICE greater than or equal to 500 HP manufactured on or after July 1, 2010, that do not meet the standards applicable to non-emergency engines, the owner or operator of must keep records of the hours of operation of the engine that is recorded through the non-resettable hour meter. The owner or operator must document how many hours are spent for emergency operation, including what classified the operation as emergency and how many hours are spent for non-emergency operation.
[40CFR§60.4245(b) & 45CSR13, Permit R13-2064G, Condition 8.5.1(b)]

6.3. Testing Requirements

6.3.1. (b) If you are an owner or operator of a stationary SI internal combustion engine and must comply with the emission standards specified in §60.4233(d) or (e), you must demonstrate compliance according to one of the methods specified in paragraphs (b)(1) and (2) of this section.

(2) Purchasing a non-certified engine and demonstrating compliance with the emission standards specified in §60.4233(d) or (e) and according to the requirements specified in §60.4244, as applicable, and according to paragraphs (b)(2)(i) and (ii) of this section.

(ii) If you are an owner or operator of a stationary SI internal combustion engine greater than 500 HP, you must keep a maintenance plan and records of conducted maintenance and must, to the extent practicable, maintain and operate the engine in a manner consistent with good air pollution control practice for minimizing emissions. In addition, you must conduct an initial performance test and conduct subsequent performance testing every 8,760 hours or 3 years, whichever comes first, thereafter to demonstrate compliance.

[40 C.F.R. §60.4243(b)(2) & 45CSR13, Permit R13-2064G, Condition 8.3.1)]

6.3.2. Owners and operators of stationary SI ICE who conduct performance tests must follow the procedures in paragraphs (a) through (f) of this section.

(a) Each performance test must be conducted within 10 percent of 100 percent peak (or the highest achievable) load and according to the requirements in §60.8 and under the specific conditions that are specified by Table 2 to this subpart.

§60.8 (a) Except as specified in paragraphs (a)(1),(a)(2), (a)(3), and (a)(4) of this section, within 60 days after achieving the maximum production rate at which the affected facility will be operated, but not later than 180 days after initial startup of such facility, or at such other times specified by this part, and at such other times as may be required by the Administrator under section 114 of the Act, the owner or operator of such facility shall conduct performance test(s) and furnish the Administrator a written report of the results of such performance test(s).

[40 C.F.R. §60.8(a), 40 C.F.R. §60.4244(a) & 45CSR13, Permit R13-2064G, Condition 8.4.1]

6.4. Recordkeeping Requirements

6.4.1. (a) Owners and operators of all stationary SI ICE must keep records of the information in paragraphs (a)(1) through (4) of this section.

(1) All notifications submitted to comply with this subpart and all documentation supporting any notification.
(2) Maintenance conducted on the engine.
(4) If the stationary SI internal combustion engine is not a certified engine or is a certified engine operating in a non-certified manner and subject to §60.4243(a)(2), documentation that the engine meets the emission standards.

[40 CFR §60.4245(a) & 45CSR13, Permit R13-2064G, Condition 8.5.1(a)]

6.5. Reporting Requirements

6.5.1. (e) If you own or operate an emergency stationary SI ICE with a maximum engine power more than 100 HP that operates or is contractually obligated to be available for more than 15 hours per calendar year for the purposes specified in §60.4243(d)(2)(ii) and (iii) or that operates for the purposes specified in §60.4243(d)(3)(i), you must submit an annual report according to the requirements in paragraphs (e)(1) through (3) of this section.

(1) The report must contain the following information:
(i) Company name and address where the engine is located.
(ii) Date of the report and beginning and ending dates of the reporting period.
(iii) Engine site rating and model year.

(iv) Latitude and longitude of the engine in decimal degrees reported to the fifth decimal place.

(v) Hours operated for the purposes specified in §60.4243(d)(2)(ii) and (iii), including the date, start time, and end time for engine operation for the purposes specified in §60.4243(d)(2)(ii) and (iii).

(vi) Number of hours the engine is contractually obligated to be available for the purposes specified in §60.4243(d)(2)(ii) and (iii).

(vii) Hours spent for operation for the purposes specified in §60.4243(d)(3)(i), including the date, start time, and end time for engine operation for the purposes specified in §60.4243(d)(3)(i). The report must also identify the entity that dispatched the engine and the situation that necessitated the dispatch of the engine.

(2) The first annual report must cover the calendar year 2015 and must be submitted no later than March 31, 2016. Subsequent annual reports for each calendar year must be submitted no later than March 31 of the following calendar year.

(3) The annual report must be submitted electronically using the subpart specific reporting form in the Compliance and Emissions Data Reporting Interface (CEDRI) that is accessed through EPA's Central Data Exchange (CDX) (*www.epa.gov/cdx*). However, if the reporting form specific to this subpart is not available in CEDRI at the time that the report is due, the written report must be submitted to the Administrator at the appropriate address listed in §60.4.

[40 CFR §60.4245(e)]

6.5.2. Owners and operators of stationary SI ICE greater than or equal to 500 hp that have not been certified by an engine manufacturer to meet the emission standards in §60.4231 must submit an initial notification as required in §60.7(a)(1). The notification must include the information in paragraphs (c)(1) through (5) of this section.

1. Name and address of the owner or operator;
2. The address of the affected source;
3. Engine information including make, model, engine family, serial number, model year, maximum engine power, and engine displacement;
4. Emission control equipment; and
5. Fuel used

[40CFR§60.4245(c) and 45CSR13, Permit R13-2064G, Condition 8.5.1(c)]

6.5.3. Owners and operators of stationary SI ICE that are subject to performance testing must submit a copy of each performance test as conducted in §60.4244 within 60 days after the test has been completed.

[40CFR§60.4245(d) & 45CSR13, Permit R13-2064G, Condition 8.5.1(d)]

6.6. Compliance Plan

6.6.1 N/A

7.0 40 C.F.R. 60, Subpart GG Requirements for Stationary Gas Turbines [Emission Unit ID: (09805)]

7.1 Limitations and Standards

7.1.1. No owner or operator subject to the provisions of this subpart shall cause to be discharged into the atmosphere from any stationary gas turbine, any gases which contain nitrogen oxides (NO_X) in excess of:

$$STD = 0.0150\frac{(14.4)}{Y} + F$$

where:

STD = the allowable ISO corrected (if required as given in §60.335(b)(1)) NO_X emission concentration (percent by volume @ 15% O^2 on a dry basis),
Y = manufacturer's rated heat rate at rated peak load (kilojoules per watt hour), or actual measured heat rate based on lower heating value of fuel as measured at actual peak load for the facility. The value of U shall not exceed 14.4 kj/W-hr, and
F = NOX emission allowance for fuel bound nitrogen

[40 CFR §60.332(a)(2)]

7.1.2. Stationary gas turbines with a heat input at peak load equal to or greater than 10.7 gigajoules per hour (10 million Btu/hr) but less than or equal to 107.2 gigajoules per hour (100 million Btu/hr) based on the lower heating value of the fuel fired, shall comply with the provision in paragraph (a)(2) [Condition 7.1.1] of this section.
[40 CFR §60.332(c)]

7.1.3. No owner or operator subject to the provisions of this subpart shall cause to be discharged into the atmosphere from any stationary gas turbine gases which contain SO_2 in excess of 0.015 percent by volume at 15% O^2 and on a dry basis or shall burn any fuel which contains total sulfur in excess of 0.8 percent by weight (8000 ppmw).
[40 CFR §60.4333]

7.2. Monitoring Requirements

7.2.1. For any turbine that commenced construction, reconstruction or modification after October 3, 1977, but before July 8, 2004, and which does not use steam or water injection to control NO_X emissions, the owner or operator may, but is not required to, for purposes of determining excess emissions, use a CEMS that meets the requirements of paragraph (b) of this section. Also, if the owner or operator has previously submitted and received EPA, State, or local permitting authority approval of a procedure for monitoring compliance with the applicable NO_X emission limit under §60.332, that approved procedure may continue to be used.
[40 CFR § 60.334(c)]

7.2.2. The owner or operator of any stationary gas turbine subject to the provisions of this subpart;

(1) Shall monitor the total sulfur content of the fuel being fired in the turbine, except as provided in paragraph (h)(3) of this section. The sulfur content of the fuel must be determined using total sulfur methods described in §60.335(b)(10). Alternatively, if the total sulfur content of the gaseous fuel during the most recent performance test was less than 0.4 weight percent (4000 ppmw), ASTM D4084-82, 94, D5504-01, D6228-98, or Gas Processors Association Standard 2377-86 (all of which are incorporated by reference-see §60.17), which measure the major sulfur compounds may be used; and

(2) Shall monitor the nitrogen content of the fuel combusted in the turbine, if the owner or operator claims an allowance for fuel bound nitrogen (i.e., if an F-value greater than zero is being or will be used by the owner or operator to calculate STD in §60.332). The nitrogen content of the fuel shall be determined using methods described in §60.335(b)(9) or an approved alternative.

(3) Notwithstanding the provisions of paragraph (h)(1) of this section, the owner or operator may elect not to monitor the total sulfur content of the gaseous fuel combusted in the turbine, if the gaseous fuel is demonstrated to meet the definition of natural gas in §60.331(u), regardless of whether an existing custom schedule approved by the administrator for subpart GG requires such monitoring. The owner or operator shall use one of the following sources of information to make the required demonstration:

(i) The gas quality characteristics in a current, valid purchase contract, tariff sheet or transportation contract for the gaseous fuel, specifying that the maximum total sulfur content of the fuel is 20.0 grains/100 scf or less; or

(ii) Representative fuel sampling data which show that the sulfur content of the gaseous fuel does not exceed 20 grains/100 scf. At a minimum, the amount of fuel sampling data specified in section 2.3.1.4 or 2.3.2.4 of appendix D to part 75 of this chapter is required.

[40 CFR § 60.334(h)]

7.2.3. The frequency of determining the sulfur and nitrogen content of the fuel shall be as follows;

(2) Gaseous fuel. Any applicable nitrogen content value of the gaseous fuel shall be determined and recorded once per unit operating day. For owners and operators that elect not to demonstrate sulfur content using options in paragraph (h)(3) of this section, and for which the fuel is supplied without intermediate bulk storage, the sulfur content value of the gaseous fuel shall be determined and recorded once per unit operating day.

[40 CFR § 60.334(i)(2)]

7.2.4. For each affected unit that elects to continuously monitor parameters or emissions, or to periodically determine the fuel sulfur content or fuel nitrogen content under this subpart, the owner or operator shall submit reports of excess emissions and monitor downtime, in accordance with §60.7(c). Excess emissions shall be reported for all periods of unit operation, including startup, shutdown and malfunction.
[40 CFR § 60.334(j)]

7.3. Testing Requirements

7.3.1. The owner or operator shall conduct the performance testes required in §60.8, using either (1) EPA Method 20; (2) ASTM D6522-00 (incorporated by reference, see §60.17), or (3) EPA Method 7E and either EPA Method 3 or 3A in appendix A to this part to determine NO_X and the diluent concentration.
[40 CFR§ 60.335]

7.4. Recordkeeping Requirements

7.4.1. **N/A**

7.5. Reporting Requirements

7.5.1. All records required under 40CFR60 Subpart GG shall be maintained by the owner or operator of the affected facility for a period of two years following the date of such record.
[45CSR13, Permit R13-2064G, Condition 5.5.1]

7.5.2. The permitted facility shall comply with all applicable provisions of 40CFR60 Subpart GG. The permittee must also notify the Director of excess emissions as required.

40CFR60 Subpart GG Applicable Requirements
40 CFR 60 Subpart GG, specifically 40 CFR §60.332(a)(2); §60.332(c); §60.333; §60.334(c); §60.334(h)(1); §60.334(h)(2); §60.334(h)(3)(i); §60.334(h)(3)(ii); §60.334(i)(2); §60.334(j); §60.335.

[40 CFR §60.330-335 & 45CSR13, Permit R13-2064G, Condition 5.5.2]

7.6. Compliance Plan

7.6.1 N/A

8.0 40 C.F.R. 60, Subpart KKKK Requirements for Stationary Combustion Turbines [Emission Unit ID: (09806)]

8.1 Limitations and Standards

8.1.1. NO_x emissions from the Solar Turbines shall not exceed 25 ppm at 15% O_2 or 1.2 lb/MWh gross output. When operating at less than 75% peak load or at temperatures less than 0^oF, the emission limit for NO_X is 150 ppm at 15% O_2 or 8.7 lb/MWh gross output.
[40 CFR §60.4320(a) & 45CSR13, Permit R13-2064G, Condition 5.1.8)]

8.1.2. SO_2 emissions shall not exceed 0.90 lb/MWh gross output or 0.060 lb SO_2/mmBtu heat input.
[40 CFR §60.4330(a) & 45CSR13, Permit R13-2064G, Condition 5.1.9]

8.1.3. You must operate and maintain your stationary combustion turbine, air pollution control equipment, and monitoring equipment in a manner consistent with good air pollution control practices for minimizing emissions at all times including during startup, shutdown, and malfunction.
[40 CFR § 60.4333(a) & 45CSR13, Permit R13-2064G, Condition 5.1.12]

8.1.4. You must perform annual performance tests in accordance with §60.4400 to demonstrate continuous compliance. If the NO_X emission result from the performance test is less than or equal to 75 percent of the NO_X emission limit for the turbine, you may reduce the frequency of subsequent performance tests to once every 2 years (no more than 26 calendar months following the previous performance test). If the results of any subsequent performance test exceed 75 percent of the NO_X emission limit for the turbine, you must resume annual performance tests.
[40 C.F.R. § 60.4340(a) & 45CSR13, Permit R13-2064G, Condition(s) 5.2.2]

8.2. Monitoring Requirements

8.2.1 You must monitor the total sulfur content of the fuel being fired in the turbines, **<u>except as provided in §60.4365.</u>**
[40 C.F.R. § 60.4360]

8.2.2. You may elect not to monitor the total sulfur content of the fuel combusted in the turbine, if the fuel is demonstrated not to exceed potential sulfur emissions of 26 ng SO_2/J (0.060 lb SO_2/MMBtu) heat input for units located in continental areas and 180 ng SO_2/J (0.42 lb SO_2/MMBtu) heat input for units located in noncontinental areas or a continental area that the Administrator determines does not have access to natural gas and that the removal of sulfur compounds would cause more environmental harm than benefit. You must use one of the following sources of information to make the required demonstration:

(a) The fuel quality characteristics in a current, valid purchase contract, tariff sheet or transportation contract for the fuel, specifying that the maximum total sulfur content for oil use in continental areas is 0.05 weigh percent (500 ppmw) or less and 0.4 weight percent (4,000 ppmw) or less for noncontinental areas, the total sulfur content for natural gas use in continental areas is 20 grains of sulfur or less per 100 standard cubic feet and 140 grains of sulfur or less per 100 standard cubic feet for noncontinental areas, has potential sulfur emissions of less than less than 26 ng SO_2/J (0.060 lb SO_2/MMBtu) heat input for continental areas, and has potential emissions of less than 180 ng SO_2/J (0.42 lb SO_2/MMBtu) heat input for noncontinental area ; or

(b) Representative fuel sampling data which show that the total sulfur content of the fuel does not exceed 26 ng SO_2/J (0.060 lb SO_2/MMBtu) heat input for continental areas or 180 ng SO_2/J (0.42 lb SO_2/MMBtu) for noncontinental areas. At a minimum, the amount of fuel sampling data specified in section 2.3.1.4 or 2.3.2.4 of appendix D to part 75 of this chapter (CFR Title 40) is required.

[40 C.F.R. § 60.4365 & 45CSR13, Permit R13-2064G, Condition 5.1.10]

8.3. Testing Requirements

8.3.1. The permittee shall conduct an initial performance test within 60 days after achieving maximum output of each turbine, but no later than180 days after initial startup. After the initial test, subsequent performance testing shall be conducted annually (no more than 14 months following the previous test) unless the previous results demonstrate that the affected units achieved compliance of less than or equal to 75 percent of the NOx emission limit, then the permittee may reduce the frequency of subsequent tests to once every two years (no more than 26 calendar months following the previous test) as allowed under 40 CFR §60.4340(a). If the results of any subsequent performance test exceed 75 percent of the NOx emission limit, then the permittee must resume annual performance tests. Such testing shall be conducted in accordance with Condition 3.3.1 and 40 CFR §60.4400.
[40 CFR§ 60.4400(a) & 45CSR13, Permit R13-2064G, Condition 5.3.2]

8.4. Recordkeeping Requirements

8.4.1. The permittee shall maintain the fuel quality characteristics in a current, valid purchase contract, tariff sheet or transportation contract for the fuel, specifying that the maximum total sulfur content for natural gas use in 20 grains of sulfur or less per 100 standard cubic feet, has potential sulfur emissions of less than 26 ng SO_2/J (0.060 lb SO_2/MMBtu) heat input for continental areas.
[40 CFR §60.4365(a) & 45CSR13, Permit R13-2064G, Condition 5.4.4]

8.5. Reporting Requirements

8.5.1. For each affected unit required to continuously monitor parameters or emissions, or to periodically determine the fuel sulfur content under this subpart, you must submit reports of excess emissions and monitor downtime, in accordance with §60.7(c). Excess emissions must be reported for all periods of unit operation, including start-up, shutdown, and malfunction.
[40 CFR §60.4375(a)]

8.5.2. For each affected unit that performs annual performance tests in accordance with §60.4340(a), you must submit a written report of the results of each performance test before the close of business on the 60th day following the completion of the performance test.
[40 CFR §60.4375(b) & 45CSR13, Permit R13-2064G, Condition 5.5.3]

8.6. Compliance Plan

8.6.1 N/A

9.0 45 CSR 13, NSR Permit Requirements, R13-2064G [Emission Unit IDs: (09801, 09802, 09805, 09806, & 098G3]

9.1 Limitations and Standards

9.1.1. Maximum hourly emission rates from Emission Unit 09805 shall not exceed the following limits;

Operating Mode	Emissions (lb/hr)	
	NO_X	**CO**
Full Load (@ 0°F)	6.11	7.44
Low Load Operations (<50%)	11.47	219.34
Low-Temp Operations (< -0°F)	30.36	23.10
Startup/Shutdown	3.86	72.00

[45CSR13, Permit R13-2064G, Condition 5.1.1]

9.1.2. Maximum annual emission rates from Emission Unit 09805 shall not exceed the following limits;

	Emissions (ton/yr)
NO_X	39.00
CO	99.00

[45CSR13, Permit R13-2064G, Condition 5.1.2]

9.1.3. Emission Unit 09805 shall consume no more than 66,246 standard cubic feet (scf) of natural gas per hour of 582 x 10^6 scf of natural gas per year.
[45CSR13, Permit R13-2064G, Condition 5.1.3)]

9.1.4. Maximum hourly emission rates from Emission Unit 09806 shall not exceed the following limits;

Operating Mode	Emissions (lb/hr)		
	NO_X	**CO**	**VOC**
Full Load (@ 32°F)	4.14	5.05	0.29
Low Load (<50%)	7.51	304.73	3.48
Low-Temp (< 0 to -20°F)	7.67	11.11	0.63
Very Low Temp (<-20°F)	21.90	16.67	0.63
Startup/Shutdown	1.00	94.60	1.08

[45CSR13, Permit R13-2064G, Condition 5.1.4]

9.1.5. Maximum annual emission rates from Emission Unit 09806 shall not exceed the following limits;

	Emissions (ton/yr)
NO_X	18.30
CO	32.09
VOC	1.38

[45CSR13, Permit R13-2064G, Condition 5.1.5]

9.1.6. Emission Unit 09806 shall consume no more than 47,708 standard cubic feet (scf) of natural gas per hour or 395.33 x 10^6 scf of natural gas per year.
[45CSR13, Permit R13-2064G, Condition 5.1.6)]

9.1.7. The permitted facility shall comply with all applicable provisions of 40 CFR §§ 60.332, 60.333, 60.334, 60.335, provided that compliance with any more stringent limitation set forth in this permit shall also be demonstrated. The permittee must notify the Director of the DAQ of excess emissions as required.
[45CSR13, Permit R13-2064G, Condition 5.1.7]

9.1.8. **40CFR63 Subpart YYYY Notification Requirements**

(a) You must submit all of the notifications in §§63.7(b) and (c), 63.8(e), 63.8(f)(4), and 63.9(b) and (h) that apply to you by the dates specified.

(b) *Not applicable.*

(c) As specified in §63.9(b), if you start up your new or reconstructed stationary combustion turbine on or after March 5, 2004, you must submit an Initial Notification not later than 120 calendar days after you become subject to 40CFR63 Subpart YYYY.

(d) If you are required to submit an Initial Notification but are otherwise not affected by the emission limitation requirements of 40CFR63 Subpart YYYY, in accordance with §63.6090(b), your notification must include the information in §63.9(b)(2)(i) through (v) and a statement that your new or reconstructed stationary combustion turbine has no additional emission limitation requirements and must explain the basis of the exclusion (for example, that it operates exclusively as an emergency stationary combustion turbine).

(e) *Not applicable.*

(f) *Not applicable.*

[45CSR13, Permit R13-2064G, Condition 5.1.11]

9.1.9. Emission Units 09805 & 09806 shall be operated and maintained in accordance with the manufacturer's recommendations and specifications and in a manner consistent with good operating practices and shall only burn natural gas.
[45CSR13, Permit R13-2064G, Condition 5.1.13]

9.1.10. The quantity of natural gas that shall be consumed in the 530 hp natural gas fired emergency generator, Emission Unit 098G3, shall not exceed 4,334 cubic feet per hour or 2.17 x 10^6 cubic feet per year.
[45CSR13, Permit R13-2064G, Condition 7.1.1]

9.1.11. Maximum emissions from the 530 hp natural gas fired emergency generator, Emission Unit 098G3, shall not exceed the following limits:

Pollutant	***Maximum Hourly Emissions (lb/hr)***	***Maximum Annual Emissions (ton/yr)***
NO_X	2.34	0.58
CO	1.52	0.38
VOC	0.30	0.08
CH_2O	0.23	0.06

[45CSR13, Permit R13-2064G, Condition 7.1.2]

9.1.12. **Maximum Yearly Operation Limitation.** The maximum yearly hours of operation for Emission Unit 098G3 shall not exceed 500 hours per year. Compliance with the maximum yearly operation limitation shall be determined using a twelve month rolling total. A twelve month rolling total shall mean the sum of the hours of operation at any given time during the previous consecutive calendar months.
[45CSR13, Permit R13-2064G, Condition 7.1.3]

9.1.13. The provisions of this subpart (40CFR60, Subpart JJJJ) are applicable to owners, and operators of stationary spark ignition (SI) internal combustion engines (ICE) as specified below. For the purposes of this subpart, the date that construction commences is the date the engine is ordered by the owner or operator.
a. Owners and operators of stationary SI ICE that commence construction after June 12, 2006, where the stationary SI ICE are manufactured:
1. *Reserved;*
2. *Reserved;*
3. *Reserved;*
4. *On or after January 1, 2009, for emergency engines with a maximum engine power greater than 19 KW (25 HP).*
b. Owners and operators of stationary SI ICE that commence modification or reconstruction after June 12, 2006.
[45CSR13, Permit R13-2064G, Condition 8.1.1]

9.1.14. The provisions of this subpart are not applicable to stationary SI ICE being tested at an engine test cell/stand.
[45CSR13, Permit R13-2064G, Condition 8.1.2]

9.1.15. Stationary SI ICE may be eligible for exemption from the requirements of this subpart as described in 40 CFR part 1068, subpart C (or the exemptions described in 40 CFR parts 90 and 1048, for engines that would need to be certified to standards in those parts), except that owners and operators, as well as manufacturers, may be eligible to request an exemption.
[45CSR13, Permit R13-2064G, Condition 8.1.3]

9.1.16. *Stationary RICE subject to Regulations made under 40 CFR Part 60.* An affected source that meets any of the criteria in paragraphs (c)(1) through (7) of 40 CFR 63.6590 must meet the requirements of 40 CFR Part 63 Subpart ZZZZ by meeting the requirements of 40 CFR part 60 subpart IIII, for compression ignition engines or 40 CFR part 60 subpart JJJJ, for spark ignition engines. No further requirements apply for such engines under this part.

The permittee meets the criteria of paragraph (c)(1), which is for new or reconstructed stationary rice located at an area source. The permittee must meet the requirements of this part by meeting the requirements of 40 CFR part 60 subpart JJJJ. **(G3)**
[45CSR13, Permit R13-2064G, Condition 9.1.2)]

9.1.17. Following, are the applicable RICE MACT requirements according to the "Summary of Requirements" table provided by the EPA. Emission Units 09801 and 09802 are existing stationary non-emergency natural gas fired remote 4SLB engines located at an area source.

Emission Limitations	Operating Limitations	Monitoring Requirements	Continuous Compliance	Notification Requirements	Recordkeeping Requirements
§ 63.6603 and Table 2d (Line 8)	§ 63.6603	§§ 63.6625 (h), (j)	§ 63.6605, § 63.6640(a), (e) Table 6 (Line 9)	§ 63.6645(a)(5)	§§ 63.6655(a), (d), (e)

[45CSR13, Permit R13-2064G, Condition 9.1.3]

9.2. Monitoring Requirements

9.2.1. At such reasonable times as the Secretary may designate, the permittee shall conduce Method 9 emission observations for the purpose of demonstrating compliance with Condition 9.1.9. Method 9 shall be conducted in accordance with 40 CFR 60 Appendix A.
[45CSR13, Permit R13-2064G, Condition 5.2.1]

9.3. Testing Requirements

9.3.1. In the event that the secretary requests emissions test to be conducted to determine the carbon monoxide (CO), nitrogen oxides (NO_X), particulate matter (PM_{10}), sulfur dioxide (SO_2), and volatile organic compounds (VOC) from emission points, the methods listed below from Appendix A of 40CFR60 shall be utilized for purposes of conducting performance tests, unless the Secretary approves an alternate or equivalent method. Submission of test protocol and notification of testing is required as described in Section 3.3.1 of this permit.

Pollutant	*Method*
CO	10, 10A or 10B
NO_X	40 CFR 60 Subpart GG
Formaldehyde	18
SO_2	40 CFR 60 Subpart GG
VOC	25 or 25A

[45CSR13, Permit R13-2064G, Condition 5.3.1]

9.3.2. Owners and operators of stationary SI ICE that are required to meet standards that reference 40 CFR 1048.101 must, if testing their engines in use, meet the standards in that section applicable to field testing, except as indicated in paragraph (e) of this section.
[45CSR13, Permit R13-2064G, Condition 8.2.2]

9.4. Recordkeeping Requirements

9.4.1. To demonstrate compliance with Conditions 9.1.2 and 9.1.5, the permittee shall maintain monthly operating hours at normal dry low NO_X (DLN) conditions, non-dry low NO_X (non-DLN) conditions and low ambient temperature conditions as well as the monthly number of startup and shutdown cycles. These monthly records will be used to calculate monthly emissions (ME) for each regulated pollutant (P_X) using the following equation;

$$ME\ P_X = DLN\ P_X * DLN\ hrs + non\ DLN\ P_X * non\ DLN\ hrs + LT\ P_X * LT\ hrs + SSP_X * SS\ cycles$$

Where: DLN P_X, non DLN P_X, LT P_X and SS P_X are the unit emission rates (lb/hr or lb/cycle) for pollutant X during normal DLN, non dry Low NO_X, low temperature, and startup/shutdown operation, respectively.

[45CSR13, Permit R13-2064G, Condition 5.4.1]

9.4.2. To demonstrate compliance with Conditions 9.1.1 and 9.1.4, the permittee shall utilize the monthly emission formula listed Condition 9.4.1 and keep records of operation of the emissions units 09805 and 09806.

[45CSR13, Permit R13-2064G, Condition 5.4.2]

9.4.3. To demonstrate compliance with Conditions 9.1.3 and 9.1.6, the permittee shall maintain records of the amount of natural gas consumed in emission units 09805 and 09806. Said records shall be maintained on

site for a period of five (5) years and shall be made available to the Director of the DAQ or his/her duly authorized representative upon request and shall be certified by a responsible official upon submittal.

[45CSR13, Permit R13-2064G, Condition 5.4.3]

9.4.4. To demonstrate compliance with Conditions 9.1.10 – 9.1.12, the permittee shall maintain records of the hours of operation of Emission Unit 098G3. Said records shall be maintained on site or in a readily accessible off-site location maintained by the permittee for a period of five (5) years. Said records shall be readily available to the Director of the Division of Air Quality or his/her duly authorized representative for expeditious inspection and review. Any records submitted to the agency pursuant to a requirement of this permit or upon request by the Director shall be certified by a responsible official.
[45CSR13, Permit R13-2064G, Condition 7.2.1]

9.4.5. Owners and operators of stationary SI natural gas fired engines may operate their engines using propane for a maximum of 100 hours per year as an alternative fuel solely during emergency operations but must keep records of use. If propane is used for more than 100 hours per year in an engine that is not certified to the emission standards when using propane, the owners and operators are required to conduct a performance test to demonstrate compliance with the emissions standards of §60.4233.
[45CSR13, Permit R13-2064G, Condition 8.3.3]

9.5. Reporting Requirements

9.5.1 N/A

9.6. Compliance Plan

9.6.1 N/A

APPENDIX C

ELECTRONIC SUBMITTAL

Title V Operating Permit Renewal Application

Smithfield Compressor Station, Facility ID No. 103-00010
Smithfield, West Virginia

Columbia Gas Transmission, LLC
1700 MacCorkle Avenue, SE
Charleston, West Virginia

April 2017

TANKS 4.0.9d
Emissions Report - Detail Format
Tank Indentification and Physical Characteristics

Identification

User Identification:	Smithfield - A01 - Ethanol Tank
City:	Smithfield
State:	West Virginia
Company:	Columbia Pipeline Group
Type of Tank:	Horizontal Tank
Description:	Smithfield Compressor Station

Tank Dimensions

Shell Length (ft):	12.00
Diameter (ft):	8.50
Volume (gallons):	5,000.00
Turnovers:	0.00
Net Throughput(gal/yr):	60,000.00
Is Tank Heated (y/n):	N
Is Tank Underground (y/n):	N

Paint Characteristics

Shell Color/Shade:	Gray/Light
Shell Condition	Good

Breather Vent Settings

Vacuum Settings (psig):	-0.03
Pressure Settings (psig)	0.03

Meterological Data used in Emissions Calculations: Pittsburgh, Pennsylvania (Avg Atmospheric Pressure = 14.11 psia)

TANKS 4.0.9d
Emissions Report - Detail Format
Liquid Contents of Storage Tank

Smithfield - A01 - Ethanol Tank - Horizontal Tank
Smithfield, West Virginia

Mixture/Component	Month	Daily Liquid Surf. Temperature (deg F) Avg.	Min.	Max.	Liquid Bulk Temp (deg F)	Vapor Pressure (psia) Avg.	Min.	Max.	Vapor Mol. Weight.	Liquid Mass Fract.	Vapor Mass Fract.	Mol. Weight	Basis for Vapor Pressure Calculations
Ethyl alcohol	All	56.69	48.70	64.69	52.55	0.5867	0.4420	0.7713	46.0700			46.07	Option 2: A=8.321, B=1718.21, C=237.52

TANKS 4.0.9d
Emissions Report - Detail Format
Detail Calculations (AP-42)

Smithfield - A01 - Ethanol Tank - Horizontal Tank
Smithfield, West Virginia

Annual Emission Calcaulations	
Standing Losses (lb):	55.8300
Vapor Space Volume (cu ft):	433.7199
Vapor Density (lb/cu ft):	0.0049
Vapor Space Expansion Factor:	0.0818
Vented Vapor Saturation Factor:	0.8833
Tank Vapor Space Volume:	
Vapor Space Volume (cu ft):	433.7199
Tank Diameter (ft):	8.5000
Effective Diameter (ft):	11.3990
Vapor Space Outage (ft):	4.2500
Tank Shell Length (ft):	12.0000
Vapor Density	
Vapor Density (lb/cu ft):	0.0049
Vapor Molecular Weight (lb/lb-mole):	46.0700
Vapor Pressure at Daily Average Liquid Surface Temperature (psia):	0.5867
Daily Avg. Liquid Surface Temp. (deg. R):	516.3645
Daily Average Ambient Temp. (deg. F):	50.3083
Ideal Gas Constant R (psia cuft / (lb-mol-deg R)):	10.731
Liquid Bulk Temperature (deg. R):	512.2183
Tank Paint Solar Absorptance (Shell):	0.5400
Daily Total Solar Insulation Factor (Btu/sqft day):	1,202.9556
Vapor Space Expansion Factor	
Vapor Space Expansion Factor:	0.0818
Daily Vapor Temperature Range (deg. R):	31.9767
Daily Vapor Pressure Range (psia):	0.3294
Breather Vent Press. Setting Range(psia):	0.0600
Vapor Pressure at Daily Average Liquid Surface Temperature (psia):	0.5867
Vapor Pressure at Daily Minimum Liquid Surface Temperature (psia):	0.4420
Vapor Pressure at Daily Maximum Liquid Surface Temperature (psia):	0.7713
Daily Avg. Liquid Surface Temp. (deg R):	516.3645
Daily Min. Liquid Surface Temp. (deg R):	508.3704
Daily Max. Liquid Surface Temp. (deg R):	524.3587
Daily Ambient Temp. Range (deg. R):	19.1500
Vented Vapor Saturation Factor	
Vented Vapor Saturation Factor:	0.8833
Vapor Pressure at Daily Average Liquid: Surface Temperature (psia):	0.5867
Vapor Space Outage (ft):	4.2500
Working Losses (lb):	38.6158
Vapor Molecular Weight (lb/lb-mole):	46.0700
Vapor Pressure at Daily Average Liquid Surface Temperature (psia):	0.5867
Annual Net Throughput (gal/yr.):	60,000.0000
Annual Turnovers:	0.0000
Turnover Factor:	1.0000
Tank Diameter (ft):	8.5000
Working Loss Product Factor:	1.0000
Total Losses (lb):	94.4458

TANKS 4.0.9d
Emissions Report - Detail Format
Individual Tank Emission Totals

Emissions Report for: Annual

Smithfield - A01 - Ethanol Tank - Horizontal Tank
Smithfield, West Virginia

	Losses(lbs)		
Components	Working Loss	Breathing Loss	Total Emissions
Ethyl alcohol	38.62	55.83	94.45

TANKS 4.0.9d
Emissions Report - Detail Format
Tank Indentification and Physical Characteristics

Identification

User Identification:	Smithfield - A02 - A03 - Oil Tank
City:	Smithfield
State:	West Virginia
Company:	Columbia Pipeline Group
Type of Tank:	Horizontal Tank
Description:	Smithfield Compressor Station

Tank Dimensions

Shell Length (ft):	12.00
Diameter (ft):	8.50
Volume (gallons):	5,000.00
Turnovers:	0.00
Net Throughput(gal/yr):	60,000.00
Is Tank Heated (y/n):	N
Is Tank Underground (y/n):	N

Paint Characteristics

Shell Color/Shade:	Gray/Light
Shell Condition	Good

Breather Vent Settings

Vacuum Settings (psig):	-0.03
Pressure Settings (psig)	0.03

Meterological Data used in Emissions Calculations: Pittsburgh, Pennsylvania (Avg Atmospheric Pressure = 14.11 psia)

TANKS 4.0.9d
Emissions Report - Detail Format
Liquid Contents of Storage Tank

Smithfield - A02 - A03 - Oil Tank - Horizontal Tank
Smithfield, West Virginia

Mixture/Component	Month	Daily Liquid Surf. Temperature (deg F) Avg.	Min.	Max.	Liquid Bulk Temp (deg F)	Vapor Pressure (psia) Avg.	Min.	Max.	Vapor Mol. Weight.	Liquid Mass Fract.	Vapor Mass Fract.	Mol. Weight	Basis for Vapor Pressure Calculations
Distillate fuel oil no. 2	All	56.69	48.70	64.69	52.55	0.0058	0.0043	0.0077	130.0000			188.00	Option 1: VP50 = .0045 VP60 = .0065

TANKS 4.0.9d
Emissions Report - Detail Format
Detail Calculations (AP-42)

Smithfield - A02 - A03 - Oil Tank - Horizontal Tank
Smithfield, West Virginia

Annual Emission Calcaulations	
Standing Losses (lb):	1.2542
Vapor Space Volume (cu ft):	433.7199
Vapor Density (lb/cu ft):	0.0001
Vapor Space Expansion Factor:	0.0579
Vented Vapor Saturation Factor:	0.9987
Tank Vapor Space Volume:	
Vapor Space Volume (cu ft):	433.7199
Tank Diameter (ft):	8.5000
Effective Diameter (ft):	11.3990
Vapor Space Outage (ft):	4.2500
Tank Shell Length (ft):	12.0000
Vapor Density	
Vapor Density (lb/cu ft):	0.0001
Vapor Molecular Weight (lb/lb-mole):	130.0000
Vapor Pressure at Daily Average Liquid	
Surface Temperature (psia):	0.0058
Daily Avg. Liquid Surface Temp. (deg. R):	516.3645
Daily Average Ambient Temp. (deg. F):	50.3083
Ideal Gas Constant R	
(psia cuft / (lb-mol-deg R)):	10.731
Liquid Bulk Temperature (deg. R):	512.2183
Tank Paint Solar Absorptance (Shell):	0.5400
Daily Total Solar Insulation	
Factor (Btu/sqft day):	1,202.9556
Vapor Space Expansion Factor	
Vapor Space Expansion Factor:	0.0579
Daily Vapor Temperature Range (deg. R):	31.9767
Daily Vapor Pressure Range (psia):	0.0034
Breather Vent Press. Setting Range(psia):	0.0600
Vapor Pressure at Daily Average Liquid	
Surface Temperature (psia):	0.0058
Vapor Pressure at Daily Minimum Liquid	
Surface Temperature (psia):	0.0043
Vapor Pressure at Daily Maximum Liquid	
Surface Temperature (psia):	0.0077
Daily Avg. Liquid Surface Temp. (deg R):	516.3645
Daily Min. Liquid Surface Temp. (deg R):	508.3704
Daily Max. Liquid Surface Temp. (deg R):	524.3587
Daily Ambient Temp. Range (deg. R):	19.1500
Vented Vapor Saturation Factor	
Vented Vapor Saturation Factor:	0.9987
Vapor Pressure at Daily Average Liquid:	
Surface Temperature (psia):	0.0058
Vapor Space Outage (ft):	4.2500
Working Losses (lb):	1.0844
Vapor Molecular Weight (lb/lb-mole):	130.0000
Vapor Pressure at Daily Average Liquid	
Surface Temperature (psia):	0.0058
Annual Net Throughput (gal/yr.):	60,000.0000
Annual Turnovers:	0.0000
Turnover Factor:	1.0000
Tank Diameter (ft):	8.5000
Working Loss Product Factor:	1.0000
Total Losses (lb):	2.3386

TANKS 4.0.9d
Emissions Report - Detail Format
Individual Tank Emission Totals

Emissions Report for: Annual

Smithfield - A02 - A03 - Oil Tank - Horizontal Tank
Smithfield, West Virginia

	Losses(lbs)		
Components	Working Loss	Breathing Loss	Total Emissions
Distillate fuel oil no. 2	1.08	1.25	2.34

TANKS 4.0.9d
Emissions Report - Detail Format
Tank Indentification and Physical Characteristics

Identification

User Identification:	Smithfield - A06 - Wastewater Mix Tank
City:	Smithfield
State:	West Virginia
Company:	Columbia Pipeline Group
Type of Tank:	Horizontal Tank
Description:	Smithfield Compressor Station

Tank Dimensions

Shell Length (ft):	6.00
Diameter (ft):	4.00
Volume (gallons):	550.00
Turnovers:	0.00
Net Throughput(gal/yr):	6,600.00
Is Tank Heated (y/n):	N
Is Tank Underground (y/n):	N

Paint Characteristics

Shell Color/Shade:	Gray/Light
Shell Condition	Good

Breather Vent Settings

Vacuum Settings (psig):	-0.03
Pressure Settings (psig)	0.03

Meterological Data used in Emissions Calculations: Pittsburgh, Pennsylvania (Avg Atmospheric Pressure = 14.11 psia)

TANKS 4.0.9d
Emissions Report - Detail Format
Liquid Contents of Storage Tank

Smithfield - A06 - Wastewater Mix Tank - Horizontal Tank
Smithfield, West Virginia

Mixture/Component	Month	Daily Liquid Surf. Temperature (deg F) Avg.	Min.	Max.	Liquid Bulk Temp (deg F)	Vapor Pressure (psia) Avg.	Min.	Max.	Vapor Mol. Weight.	Liquid Mass Fract.	Vapor Mass Fract.	Mol. Weight	Basis for Vapor Pressure Calculations
Distillate fuel oil no. 2	All	56.69	48.70	64.69	52.55	0.0058	0.0043	0.0077	130.0000			188.00	Option 1: VP50 = .0045 VP60 = .0065

TANKS 4.0.9d
Emissions Report - Detail Format
Detail Calculations (AP-42)

Smithfield - A06 - Wastewater Mix Tank - Horizontal Tank
Smithfield, West Virginia

Annual Emission Calcaulations	
Standing Losses (lb):	0.1390
Vapor Space Volume (cu ft):	48.0243
Vapor Density (lb/cu ft):	0.0001
Vapor Space Expansion Factor:	0.0579
Vented Vapor Saturation Factor:	0.9994
Tank Vapor Space Volume:	
Vapor Space Volume (cu ft):	48.0243
Tank Diameter (ft):	4.0000
Effective Diameter (ft):	5.5293
Vapor Space Outage (ft):	2.0000
Tank Shell Length (ft):	6.0000
Vapor Density	
Vapor Density (lb/cu ft):	0.0001
Vapor Molecular Weight (lb/lb-mole):	130.0000
Vapor Pressure at Daily Average Liquid Surface Temperature (psia):	0.0058
Daily Avg. Liquid Surface Temp. (deg. R):	516.3645
Daily Average Ambient Temp. (deg. F):	50.3083
Ideal Gas Constant R (psia cuft / (lb-mol-deg R)):	10.731
Liquid Bulk Temperature (deg. R):	512.2183
Tank Paint Solar Absorptance (Shell):	0.5400
Daily Total Solar Insulation Factor (Btu/sqft day):	1,202.9556
Vapor Space Expansion Factor	
Vapor Space Expansion Factor:	0.0579
Daily Vapor Temperature Range (deg. R):	31.9767
Daily Vapor Pressure Range (psia):	0.0034
Breather Vent Press. Setting Range(psia):	0.0600
Vapor Pressure at Daily Average Liquid Surface Temperature (psia):	0.0058
Vapor Pressure at Daily Minimum Liquid Surface Temperature (psia):	0.0043
Vapor Pressure at Daily Maximum Liquid Surface Temperature (psia):	0.0077
Daily Avg. Liquid Surface Temp. (deg R):	516.3645
Daily Min. Liquid Surface Temp. (deg R):	508.3704
Daily Max. Liquid Surface Temp. (deg R):	524.3587
Daily Ambient Temp. Range (deg. R):	19.1500
Vented Vapor Saturation Factor	
Vented Vapor Saturation Factor:	0.9994
Vapor Pressure at Daily Average Liquid: Surface Temperature (psia):	0.0058
Vapor Space Outage (ft):	2.0000
Working Losses (lb):	0.1193
Vapor Molecular Weight (lb/lb-mole):	130.0000
Vapor Pressure at Daily Average Liquid Surface Temperature (psia):	0.0058
Annual Net Throughput (gal/yr.):	6,600.0000
Annual Turnovers:	0.0000
Turnover Factor:	1.0000
Tank Diameter (ft):	4.0000
Working Loss Product Factor:	1.0000
Total Losses (lb):	0.2582

TANKS 4.0.9d
Emissions Report - Detail Format
Individual Tank Emission Totals

Emissions Report for: Annual

Smithfield - A06 - Wastewater Mix Tank - Horizontal Tank
Smithfield, West Virginia

	Losses(lbs)		
Components	Working Loss	Breathing Loss	Total Emissions
Distillate fuel oil no. 2	0.12	0.14	0.26

TANKS 4.0.9d
Emissions Report - Detail Format
Tank Indentification and Physical Characteristics

Identification

User Identification:	Smithfield - A07 - A08 - Wastewater Mix Tank
City:	Smithfield
State:	West Virginia
Company:	Columbia Pipeline Group
Type of Tank:	Horizontal Tank
Description:	Smithfield Compressor Station

Tank Dimensions

Shell Length (ft):	10.00
Diameter (ft):	4.25
Volume (gallons):	1,000.00
Turnovers:	0.00
Net Throughput(gal/yr):	12,000.00
Is Tank Heated (y/n):	N
Is Tank Underground (y/n):	N

Paint Characteristics

Shell Color/Shade:	Gray/Light
Shell Condition	Good

Breather Vent Settings

Vacuum Settings (psig):	-0.03
Pressure Settings (psig)	0.03

Meterological Data used in Emissions Calculations: Pittsburgh, Pennsylvania (Avg Atmospheric Pressure = 14.11 psia)

TANKS 4.0.9d
Emissions Report - Detail Format
Liquid Contents of Storage Tank

Smithfield - A07 - A08 - Wastewater Mix Tank - Horizontal Tank
Smithfield, West Virginia

Mixture/Component	Month	Daily Liquid Surf. Temperature (deg F) Avg.	Min.	Max.	Liquid Bulk Temp (deg F)	Vapor Pressure (psia) Avg.	Min.	Max.	Vapor Mol. Weight.	Liquid Mass Fract.	Vapor Mass Fract.	Mol. Weight	Basis for Vapor Pressure Calculations
Distillate fuel oil no. 2	All	56.69	48.70	64.69	52.55	0.0058	0.0043	0.0077	130.0000			188.00	Option 1: VP50 = .0045 VP60 = .0065

TANKS 4.0.9d
Emissions Report - Detail Format
Detail Calculations (AP-42)

Smithfield - A07 - A08 - Wastewater Mix Tank - Horizontal Tank
Smithfield, West Virginia

Annual Emission Calcaulations	
Standing Losses (lb):	0.2615
Vapor Space Volume (cu ft):	90.3583
Vapor Density (lb/cu ft):	0.0001
Vapor Space Expansion Factor:	0.0579
Vented Vapor Saturation Factor:	0.9993
Tank Vapor Space Volume:	
Vapor Space Volume (cu ft):	90.3583
Tank Diameter (ft):	4.2500
Effective Diameter (ft):	7.3580
Vapor Space Outage (ft):	2.1250
Tank Shell Length (ft):	10.0000
Vapor Density	
Vapor Density (lb/cu ft):	0.0001
Vapor Molecular Weight (lb/lb-mole):	130.0000
Vapor Pressure at Daily Average Liquid Surface Temperature (psia):	0.0058
Daily Avg. Liquid Surface Temp. (deg. R):	516.3645
Daily Average Ambient Temp. (deg. F):	50.3083
Ideal Gas Constant R (psia cuft / (lb-mol-deg R)):	10.731
Liquid Bulk Temperature (deg. R):	512.2183
Tank Paint Solar Absorptance (Shell):	0.5400
Daily Total Solar Insulation Factor (Btu/sqft day):	1,202.9556
Vapor Space Expansion Factor	
Vapor Space Expansion Factor:	0.0579
Daily Vapor Temperature Range (deg. R):	31.9767
Daily Vapor Pressure Range (psia):	0.0034
Breather Vent Press. Setting Range(psia):	0.0600
Vapor Pressure at Daily Average Liquid Surface Temperature (psia):	0.0058
Vapor Pressure at Daily Minimum Liquid Surface Temperature (psia):	0.0043
Vapor Pressure at Daily Maximum Liquid Surface Temperature (psia):	0.0077
Daily Avg. Liquid Surface Temp. (deg R):	516.3645
Daily Min. Liquid Surface Temp. (deg R):	508.3704
Daily Max. Liquid Surface Temp. (deg R):	524.3587
Daily Ambient Temp. Range (deg. R):	19.1500
Vented Vapor Saturation Factor	
Vented Vapor Saturation Factor:	0.9993
Vapor Pressure at Daily Average Liquid: Surface Temperature (psia):	0.0058
Vapor Space Outage (ft):	2.1250
Working Losses (lb):	0.2169
Vapor Molecular Weight (lb/lb-mole):	130.0000
Vapor Pressure at Daily Average Liquid Surface Temperature (psia):	0.0058
Annual Net Throughput (gal/yr.):	12,000.0000
Annual Turnovers:	0.0000
Turnover Factor:	1.0000
Tank Diameter (ft):	4.2500
Working Loss Product Factor:	1.0000
Total Losses (lb):	0.4783

TANKS 4.0.9d
Emissions Report - Detail Format
Individual Tank Emission Totals

Emissions Report for: Annual

Smithfield - A07 - A08 - Wastewater Mix Tank - Horizontal Tank
Smithfield, West Virginia

	Losses(lbs)		
Components	Working Loss	Breathing Loss	Total Emissions
Distillate fuel oil no. 2	0.22	0.26	0.48

TANKS 4.0.9d
Emissions Report - Detail Format
Tank Indentification and Physical Characteristics

Identification

User Identification:	Smithfield - A09 - A10 - Oil Tank
City:	Smithfield
State:	West Virginia
Company:	Columbia Pipeline Group
Type of Tank:	Horizontal Tank
Description:	Smithfield Compressor Station

Tank Dimensions

Shell Length (ft):	12.00
Diameter (ft):	4.25
Volume (gallons):	1,250.00
Turnovers:	0.00
Net Throughput(gal/yr):	15,000.00
Is Tank Heated (y/n):	N
Is Tank Underground (y/n):	N

Paint Characteristics

Shell Color/Shade:	Gray/Light
Shell Condition	Good

Breather Vent Settings

Vacuum Settings (psig):	-0.03
Pressure Settings (psig)	0.03

Meterological Data used in Emissions Calculations: Pittsburgh, Pennsylvania (Avg Atmospheric Pressure = 14.11 psia)

TANKS 4.0.9d
Emissions Report - Detail Format
Liquid Contents of Storage Tank

Smithfield - A09 - A10 - Oil Tank - Horizontal Tank
Smithfield, West Virginia

Mixture/Component	Month	Daily Liquid Surf. Temperature (deg F) Avg.	Min.	Max.	Liquid Bulk Temp (deg F)	Vapor Pressure (psia) Avg.	Min.	Max.	Vapor Mol. Weight.	Liquid Mass Fract.	Vapor Mass Fract.	Mol. Weight	Basis for Vapor Pressure Calculations
Distillate fuel oil no. 2	All	56.69	48.70	64.69	52.55	0.0058	0.0043	0.0077	130.0000			188.00	Option 1: VP50 = .0045 VP60 = .0065

TANKS 4.0.9d
Emissions Report - Detail Format
Detail Calculations (AP-42)

Smithfield - A09 - A10 - Oil Tank - Horizontal Tank
Smithfield, West Virginia

Annual Emission Calcaulations	
Standing Losses (lb):	0.3138
Vapor Space Volume (cu ft):	108.4300
Vapor Density (lb/cu ft):	0.0001
Vapor Space Expansion Factor:	0.0579
Vented Vapor Saturation Factor:	0.9993
Tank Vapor Space Volume:	
Vapor Space Volume (cu ft):	108.4300
Tank Diameter (ft):	4.2500
Effective Diameter (ft):	8.0603
Vapor Space Outage (ft):	2.1250
Tank Shell Length (ft):	12.0000
Vapor Density	
Vapor Density (lb/cu ft):	0.0001
Vapor Molecular Weight (lb/lb-mole):	130.0000
Vapor Pressure at Daily Average Liquid Surface Temperature (psia):	0.0058
Daily Avg. Liquid Surface Temp. (deg. R):	516.3645
Daily Average Ambient Temp. (deg. F):	50.3083
Ideal Gas Constant R (psia cuft / (lb-mol-deg R)):	10.731
Liquid Bulk Temperature (deg. R):	512.2183
Tank Paint Solar Absorptance (Shell):	0.5400
Daily Total Solar Insulation Factor (Btu/sqft day):	1,202.9556
Vapor Space Expansion Factor	
Vapor Space Expansion Factor:	0.0579
Daily Vapor Temperature Range (deg. R):	31.9767
Daily Vapor Pressure Range (psia):	0.0034
Breather Vent Press. Setting Range(psia):	0.0600
Vapor Pressure at Daily Average Liquid Surface Temperature (psia):	0.0058
Vapor Pressure at Daily Minimum Liquid Surface Temperature (psia):	0.0043
Vapor Pressure at Daily Maximum Liquid Surface Temperature (psia):	0.0077
Daily Avg. Liquid Surface Temp. (deg R):	516.3645
Daily Min. Liquid Surface Temp. (deg R):	508.3704
Daily Max. Liquid Surface Temp. (deg R):	524.3587
Daily Ambient Temp. Range (deg. R):	19.1500
Vented Vapor Saturation Factor	
Vented Vapor Saturation Factor:	0.9993
Vapor Pressure at Daily Average Liquid: Surface Temperature (psia):	0.0058
Vapor Space Outage (ft):	2.1250
Working Losses (lb):	0.2711
Vapor Molecular Weight (lb/lb-mole):	130.0000
Vapor Pressure at Daily Average Liquid Surface Temperature (psia):	0.0058
Annual Net Throughput (gal/yr.):	15,000.0000
Annual Turnovers:	0.0000
Turnover Factor:	1.0000
Tank Diameter (ft):	4.2500
Working Loss Product Factor:	1.0000
Total Losses (lb):	0.5848

TANKS 4.0.9d
Emissions Report - Detail Format
Individual Tank Emission Totals

Emissions Report for: Annual

Smithfield - A09 - A10 - Oil Tank - Horizontal Tank
Smithfield, West Virginia

	Losses(lbs)		
Components	Working Loss	Breathing Loss	Total Emissions
Distillate fuel oil no. 2	0.27	0.31	0.58

TANKS 4.0.9d
Emissions Report - Detail Format
Tank Indentification and Physical Characteristics

Identification

User Identification:	Smithfield - A11 - A12 - Ethanol Tank
City:	Smithfield
State:	West Virginia
Company:	Columbia Pipeline Group
Type of Tank:	Horizontal Tank
Description:	Smithfield Compressor Station

Tank Dimensions

Shell Length (ft):		12.00
Diameter (ft):		6.00
Volume (gallons):		2,500.00
Turnovers:		0.00
Net Throughput(gal/yr):		30,000.00
Is Tank Heated (y/n):	N	
Is Tank Underground (y/n):	N	

Paint Characteristics

Shell Color/Shade:	Gray/Light
Shell Condition	Good

Breather Vent Settings

Vacuum Settings (psig):	-0.03
Pressure Settings (psig)	0.03

Meterological Data used in Emissions Calculations: Pittsburgh, Pennsylvania (Avg Atmospheric Pressure = 14.11 psia)

TANKS 4.0.9d
Emissions Report - Detail Format
Liquid Contents of Storage Tank

Smithfield - A11 - A12 - Ethanol Tank - Horizontal Tank
Smithfield, West Virginia

Mixture/Component	Month	Daily Liquid Surf. Temperature (deg F) Avg.	Min.	Max.	Liquid Bulk Temp (deg F)	Vapor Pressure (psia) Avg.	Min.	Max.	Vapor Mol. Weight.	Liquid Mass Fract.	Vapor Mass Fract.	Mol. Weight	Basis for Vapor Pressure Calculations
Ethyl alcohol	All	56.69	48.70	64.69	52.55	0.5867	0.4420	0.7713	46.0700			46.07	Option 2: A=8.321, B=1718.21, C=237.52

TANKS 4.0.9d
Emissions Report - Detail Format
Detail Calculations (AP-42)

Smithfield - A11 - A12 - Ethanol Tank - Horizontal Tank
Smithfield, West Virginia

Annual Emission Calcaulations	
Standing Losses (lb):	28.8075
Vapor Space Volume (cu ft):	216.1096
Vapor Density (lb/cu ft):	0.0049
Vapor Space Expansion Factor:	0.0818
Vented Vapor Saturation Factor:	0.9147
Tank Vapor Space Volume:	
Vapor Space Volume (cu ft):	216.1096
Tank Diameter (ft):	6.0000
Effective Diameter (ft):	9.5770
Vapor Space Outage (ft):	3.0000
Tank Shell Length (ft):	12.0000
Vapor Density	
Vapor Density (lb/cu ft):	0.0049
Vapor Molecular Weight (lb/lb-mole):	46.0700
Vapor Pressure at Daily Average Liquid Surface Temperature (psia):	0.5867
Daily Avg. Liquid Surface Temp. (deg. R):	516.3645
Daily Average Ambient Temp. (deg. F):	50.3083
Ideal Gas Constant R (psia cuft / (lb-mol-deg R)):	10.731
Liquid Bulk Temperature (deg. R):	512.2183
Tank Paint Solar Absorptance (Shell):	0.5400
Daily Total Solar Insulation Factor (Btu/sqft day):	1,202.9556
Vapor Space Expansion Factor	
Vapor Space Expansion Factor:	0.0818
Daily Vapor Temperature Range (deg. R):	31.9767
Daily Vapor Pressure Range (psia):	0.3294
Breather Vent Press. Setting Range(psia):	0.0600
Vapor Pressure at Daily Average Liquid Surface Temperature (psia):	0.5867
Vapor Pressure at Daily Minimum Liquid Surface Temperature (psia):	0.4420
Vapor Pressure at Daily Maximum Liquid Surface Temperature (psia):	0.7713
Daily Avg. Liquid Surface Temp. (deg R):	516.3645
Daily Min. Liquid Surface Temp. (deg R):	508.3704
Daily Max. Liquid Surface Temp. (deg R):	524.3587
Daily Ambient Temp. Range (deg. R):	19.1500
Vented Vapor Saturation Factor	
Vented Vapor Saturation Factor:	0.9147
Vapor Pressure at Daily Average Liquid: Surface Temperature (psia):	0.5867
Vapor Space Outage (ft):	3.0000
Working Losses (lb):	19.3079
Vapor Molecular Weight (lb/lb-mole):	46.0700
Vapor Pressure at Daily Average Liquid Surface Temperature (psia):	0.5867
Annual Net Throughput (gal/yr.):	30,000.0000
Annual Turnovers:	0.0000
Turnover Factor:	1.0000
Tank Diameter (ft):	6.0000
Working Loss Product Factor:	1.0000
Total Losses (lb):	48.1154

TANKS 4.0.9d
Emissions Report - Detail Format
Individual Tank Emission Totals

Emissions Report for: Annual

Smithfield - A11 - A12 - Ethanol Tank - Horizontal Tank
Smithfield, West Virginia

	Losses(lbs)		
Components	Working Loss	Breathing Loss	Total Emissions
Ethyl alcohol	19.31	28.81	48.12

TANKS 4.0.9d
Emissions Report - Detail Format
Tank Indentification and Physical Characteristics

Identification

User Identification:	Smithfield - A13 - A14 - Pipeline Liquids Tank
City:	Smithfield
State:	West Virginia
Company:	Columbia Pipeline Group
Type of Tank:	Horizontal Tank
Description:	Smithfield Compressor Station

Tank Dimensions

Shell Length (ft):		10.50
Diameter (ft):		5.75
Volume (gallons):		2,000.00
Turnovers:		0.00
Net Throughput(gal/yr):		24,000.00
Is Tank Heated (y/n):	N	
Is Tank Underground (y/n):	N	

Paint Characteristics

Shell Color/Shade:	Gray/Light
Shell Condition	Good

Breather Vent Settings

Vacuum Settings (psig):	-0.03
Pressure Settings (psig)	0.03

Meterological Data used in Emissions Calculations: Pittsburgh, Pennsylvania (Avg Atmospheric Pressure = 14.11 psia)

TANKS 4.0.9d
Emissions Report - Detail Format
Liquid Contents of Storage Tank

Smithfield - A13 - A14 - Pipeline Liquids Tank - Horizontal Tank
Smithfield, West Virginia

Mixture/Component	Month	Daily Liquid Surf. Temperature (deg F) Avg.	Min.	Max.	Liquid Bulk Temp (deg F)	Vapor Pressure (psia) Avg.	Min.	Max.	Vapor Mol. Weight.	Liquid Mass Fract.	Vapor Mass Fract.	Mol. Weight	Basis for Vapor Pressure Calculations
Gasoline (RVP 10)	All	56.69	48.70	64.69	52.55	4.8617	4.1450	5.6748	66.0000			92.00	Option 4: RVP=10, ASTM Slope=3

TANKS 4.0.9d
Emissions Report - Detail Format
Detail Calculations (AP-42)

Smithfield - A13 - A14 - Pipeline Liquids Tank - Horizontal Tank
Smithfield, West Virginia

Annual Emission Calcaulations	
Standing Losses (lb):	465.7372
Vapor Space Volume (cu ft):	173.6662
Vapor Density (lb/cu ft):	0.0579
Vapor Space Expansion Factor:	0.2209
Vented Vapor Saturation Factor:	0.5744
Tank Vapor Space Volume:	
Vapor Space Volume (cu ft):	173.6662
Tank Diameter (ft):	5.7500
Effective Diameter (ft):	8.7699
Vapor Space Outage (ft):	2.8750
Tank Shell Length (ft):	10.5000
Vapor Density	
Vapor Density (lb/cu ft):	0.0579
Vapor Molecular Weight (lb/lb-mole):	66.0000
Vapor Pressure at Daily Average Liquid Surface Temperature (psia):	4.8617
Daily Avg. Liquid Surface Temp. (deg. R):	516.3645
Daily Average Ambient Temp. (deg. F):	50.3083
Ideal Gas Constant R (psia cuft / (lb-mol-deg R)):	10.731
Liquid Bulk Temperature (deg. R):	512.2183
Tank Paint Solar Absorptance (Shell):	0.5400
Daily Total Solar Insulation Factor (Btu/sqft day):	1,202.9556
Vapor Space Expansion Factor	
Vapor Space Expansion Factor:	0.2209
Daily Vapor Temperature Range (deg. R):	31.9767
Daily Vapor Pressure Range (psia):	1.5297
Breather Vent Press. Setting Range(psia):	0.0600
Vapor Pressure at Daily Average Liquid Surface Temperature (psia):	4.8617
Vapor Pressure at Daily Minimum Liquid Surface Temperature (psia):	4.1450
Vapor Pressure at Daily Maximum Liquid Surface Temperature (psia):	5.6748
Daily Avg. Liquid Surface Temp. (deg R):	516.3645
Daily Min. Liquid Surface Temp. (deg R):	508.3704
Daily Max. Liquid Surface Temp. (deg R):	524.3587
Daily Ambient Temp. Range (deg. R):	19.1500
Vented Vapor Saturation Factor	
Vented Vapor Saturation Factor:	0.5744
Vapor Pressure at Daily Average Liquid: Surface Temperature (psia):	4.8617
Vapor Space Outage (ft):	2.8750
Working Losses (lb):	183.3571
Vapor Molecular Weight (lb/lb-mole):	66.0000
Vapor Pressure at Daily Average Liquid Surface Temperature (psia):	4.8617
Annual Net Throughput (gal/yr.):	24,000.0000
Annual Turnovers:	0.0000
Turnover Factor:	1.0000
Tank Diameter (ft):	5.7500
Working Loss Product Factor:	1.0000
Total Losses (lb):	649.0943

TANKS 4.0.9d
Emissions Report - Detail Format
Individual Tank Emission Totals

Emissions Report for: Annual

Smithfield - A13 - A14 - Pipeline Liquids Tank - Horizontal Tank
Smithfield, West Virginia

	Losses(lbs)		
Components	Working Loss	Breathing Loss	Total Emissions
Gasoline (RVP 10)	183.36	465.74	649.09

TANKS 4.0.9d
Emissions Report - Detail Format
Tank Indentification and Physical Characteristics

Identification

User Identification:	Smithfield - A15 - Oil Tank
City:	Smithfield
State:	West Virginia
Company:	Columbia Pipeline Group
Type of Tank:	Horizontal Tank
Description:	Smithfield Compressor Station

Tank Dimensions

Shell Length (ft):	5.50
Diameter (ft):	4.00
Volume (gallons):	500.00
Turnovers:	0.00
Net Throughput(gal/yr):	6,000.00
Is Tank Heated (y/n):	N
Is Tank Underground (y/n):	N

Paint Characteristics

Shell Color/Shade:	Gray/Light
Shell Condition	Good

Breather Vent Settings

Vacuum Settings (psig):	-0.03
Pressure Settings (psig)	0.03

Meterological Data used in Emissions Calculations: Pittsburgh, Pennsylvania (Avg Atmospheric Pressure = 14.11 psia)

TANKS 4.0.9d
Emissions Report - Detail Format
Liquid Contents of Storage Tank

Smithfield - A15 - Oil Tank - Horizontal Tank
Smithfield, West Virginia

Mixture/Component	Month	Daily Liquid Surf. Temperature (deg F) Avg.	Min.	Max.	Liquid Bulk Temp (deg F)	Vapor Pressure (psia) Avg.	Min.	Max.	Vapor Mol. Weight.	Liquid Mass Fract.	Vapor Mass Fract.	Mol. Weight	Basis for Vapor Pressure Calculations
Distillate fuel oil no. 2	All	56.69	48.70	64.69	52.55	0.0058	0.0043	0.0077	130.0000			188.00	Option 1: VP50 = .0045 VP60 = .0065

TANKS 4.0.9d
Emissions Report - Detail Format
Detail Calculations (AP-42)

Smithfield - A15 - Oil Tank - Horizontal Tank
Smithfield, West Virginia

Annual Emission Calcaulations	
Standing Losses (lb):	0.1274
Vapor Space Volume (cu ft):	44.0223
Vapor Density (lb/cu ft):	0.0001
Vapor Space Expansion Factor:	0.0579
Vented Vapor Saturation Factor:	0.9994
Tank Vapor Space Volume:	
Vapor Space Volume (cu ft):	44.0223
Tank Diameter (ft):	4.0000
Effective Diameter (ft):	5.2939
Vapor Space Outage (ft):	2.0000
Tank Shell Length (ft):	5.5000
Vapor Density	
Vapor Density (lb/cu ft):	0.0001
Vapor Molecular Weight (lb/lb-mole):	130.0000
Vapor Pressure at Daily Average Liquid Surface Temperature (psia):	0.0058
Daily Avg. Liquid Surface Temp. (deg. R):	516.3645
Daily Average Ambient Temp. (deg. F):	50.3083
Ideal Gas Constant R (psia cuft / (lb-mol-deg R)):	10.731
Liquid Bulk Temperature (deg. R):	512.2183
Tank Paint Solar Absorptance (Shell):	0.5400
Daily Total Solar Insulation Factor (Btu/sqft day):	1,202.9556
Vapor Space Expansion Factor	
Vapor Space Expansion Factor:	0.0579
Daily Vapor Temperature Range (deg. R):	31.9767
Daily Vapor Pressure Range (psia):	0.0034
Breather Vent Press. Setting Range(psia):	0.0600
Vapor Pressure at Daily Average Liquid Surface Temperature (psia):	0.0058
Vapor Pressure at Daily Minimum Liquid Surface Temperature (psia):	0.0043
Vapor Pressure at Daily Maximum Liquid Surface Temperature (psia):	0.0077
Daily Avg. Liquid Surface Temp. (deg R):	516.3645
Daily Min. Liquid Surface Temp. (deg R):	508.3704
Daily Max. Liquid Surface Temp. (deg R):	524.3587
Daily Ambient Temp. Range (deg. R):	19.1500
Vented Vapor Saturation Factor	
Vented Vapor Saturation Factor:	0.9994
Vapor Pressure at Daily Average Liquid: Surface Temperature (psia):	0.0058
Vapor Space Outage (ft):	2.0000
Working Losses (lb):	0.1084
Vapor Molecular Weight (lb/lb-mole):	130.0000
Vapor Pressure at Daily Average Liquid Surface Temperature (psia):	0.0058
Annual Net Throughput (gal/yr.):	6,000.0000
Annual Turnovers:	0.0000
Turnover Factor:	1.0000
Tank Diameter (ft):	4.0000
Working Loss Product Factor:	1.0000
Total Losses (lb):	0.2358

TANKS 4.0.9d
Emissions Report - Detail Format
Individual Tank Emission Totals

Emissions Report for: Annual

Smithfield - A15 - Oil Tank - Horizontal Tank
Smithfield, West Virginia

	Losses(lbs)		
Components	Working Loss	Breathing Loss	Total Emissions
Distillate fuel oil no. 2	0.11	0.13	0.24