Mullins, Robert A <robert.a.mullins@wv.gov>

R30-09700029-2021

1 message

Mullins, Robert A <robert.a.mullins@wv.gov> Tue, Oct 19, 2021 at 12:49 PM
To: Stephanie R Mink <stephanie.r.mink@wv.gov>

The attached Title V Permit Renewal for Weyerhaeuser Company's Buckhannon Facility is ready to go to Notice. The files are in the appropriate folder on the Shared Drive. I have also added my e-mails to the IPR folder.

Thanks,
R.A.

097-00029_PERM_13-1843C.pdf

T5_Info_Table_R30-09700029-2021.docx

notice -Concurrent_R30-09700029-2021.docx

DPFactsheet_R30-09700029-2021.doc

DPPermit_R30-09700029-2021

Mullins, Robert A <robert.a.mullins@wv.gov>

Pre-Draft R30-09700029-2021

2 messages

Mullins, Robert A <robert.a.mullins@wv.gov> Fri, Oct 1, 2021 at 7:55 AM
To: matthew.rutherford@weyerhaeuser.com, jhanshaw@slrconsulting.com

Attached are the Pre-Draft Title V Permit Renewal and Factsheet for Weyerhaeuser Company's Buckhannon Facility. The only changes to the permit occured in Section 7.0 since 40 CFR 63 Subpart DDDD was recently updated. Please review the permit and respond with any questions or comments by October 15, 2021.

--

Robert Mullins

WV Department of Environmental Protection

Division of Air Quality

601 57th Street, SE

Charleston, WV 25304

Phone: (304)926-0499 ext. 41286

2 attachments

Pre-DPPermit_R30-09700029-2021.pdf
1082K

Pre-DPFactsheet_R30-09700029-2021.pdf
703K

Jesse Hanshaw <jhanshaw@slrconsulting.com> Sat, Oct 2, 2021 at 10:56 PM
To: "robert.a.mullins@wv.gov" <robert.a.mullins@wv.gov>

Your message

To: Jesse Hanshaw
Subject: Pre-Draft R30-09700029-2021
Sent: Friday, October 1, 2021 7:55:46 AM (UTC-05:00) Eastern Time (US & Canada)

was read on Saturday, October 2, 2021 10:58:05 PM (UTC-05:00) Eastern Time (US & Canada).

Jesse Hanshaw
Principal Engineer

O 681-205-8949
C 304-545-8563
E jhanshaw@slrconsulting.com

SLR International Corporation

8 Capitol Street Suite 300, Charleston, WV 25301

Confidentiality Notice and Disclaimer
This communication and any attachment(s) contain information which is confidential and may also be legally privileged. It is intended for the exclusive use of the recipient(s) to whom it is addressed. If you have received this communication in error, please e-mail us by return e-mail and then delete the e-mail from your system together with any copies of it. Any views or opinions are solely those of the author and do not represent those of SLR Management Ltd, or any of its subsidiaries, unless specifically stated.

Mullins, Robert A <robert.a.mullins@wv.gov>

R30-09700029-2021

3 messages

Mullins, Robert A <robert.a.mullins@wv.gov> Tue, Sep 28, 2021 at 2:04 PM
To: matthew.rutherford@weyerhaeuser.com, jhanshaw@slrconsulting.com

I'm working on the Title V renewal for Weyerhaeuser Company's Buckhannon Facility and need to update the table below from the previous factsheet for the new factsheet. Could you supply the testing information that happened since the last renewal for the table below?

Stack Test Table

Tested Unit (Pollutant Test)	Test Years and Results Range	Testing Frequency at time of Renewal
WoodFurn (NO_X)	2005(50% - 90%), 2008(50% - 90%), 2011(50% - 90%), 2014(50% - 90%)	Once/3 years
WoodFurn (PM, CO, VOC)	2005(≤50%), 2010(≤50%), 2015(≤50%)	Once/ 5 years.
StandByFurn1 (NO_X, VOC)	2005(≤50%), 2010(≤50%), 2015(≤50%)	Once/ 5 years.
VennerDryr (PM)	2005 (≤50%), 2010(≤50%), 2015(≤50%)	Once/ 5 years.

Thanks,
--

Robert Mullins

WV Department of Environmental Protection

Division of Air Quality

601 57th Street, SE

Charleston, WV 25304

Phone: (304)926-0499 ext. 41286

Jesse Hanshaw <jhanshaw@slrconsulting.com> Tue, Sep 28, 2021 at 3:55 PM
To: "robert.a.mullins@wv.gov" <robert.a.mullins@wv.gov>

Your message

To: Jesse Hanshaw
Subject: R30-09700029-2021
Sent: Tuesday, September 28, 2021 2:04:18 PM (UTC-05:00) Eastern Time (US & Canada)

was read on Tuesday, September 28, 2021 3:54:32 PM (UTC-05:00) Eastern Time (US & Canada).

SLR

Jesse Hanshaw
Principal Engineer

O 681-205-8949
C 304-545-8563

E jhanshaw@slrconsulting.com

SLR International Corporation
8 Capitol Street Suite 300, Charleston, WV 25301

Follow us on LinkedIn

Winners: RoSPA President's Award 2020

Confidentiality Notice and Disclaimer
This communication and any attachment(s) contain information which is confidential and may also be legally privileged. It is intended for the exclusive use of the recipient(s) to whom it is addressed. If you have received this communication in error, please e-mail us by return e-mail and then delete the e-mail from your system together with any copies of it. Any views or opinions are solely those of the author and do not represent those of SLR Management Ltd, or any of its subsidiaries, unless specifically stated.

Rutherford, Matthew <Matthew.Rutherford@weyerhaeuser.com> Wed, Sep 29, 2021 at 10:48 AM
To: "Mullins, Robert A" <robert.a.mullins@wv.gov>, "jhanshaw@slrconsulting.com" <jhanshaw@slrconsulting.com>

I updated the table with testing information since the last renewal. See green highlights.

From: Mullins, Robert A <robert.a.mullins@wv.gov>
Sent: Tuesday, September 28, 2021 2:04 PM
To: Rutherford, Matthew <Matthew.Rutherford@weyerhaeuser.com>; jhanshaw@slrconsulting.com
Subject: [EXTERNAL] R30-09700029-2021

I'm working on the Title V renewal for Weyerhaeuser Company's Buckhannon Facility and need to update the table below from the previous factsheet for the new factsheet. Could you supply the testing information that happened since the last renewal for the table below?

Stack Test Table

Tested Unit (Pollutant Test)	Test Years and Results Range	Testing Frequency at time of Renewal
WoodFurn (NO_X)	2005(50% - 90%), 2008(50% - 90%), 2010(50% - 90%), 2011(50% - 90%), 2014(50% - 90%), 2015(50% - 90%), 2016(50% - 90%), 2019(50% - 90%),	Once/3 years
WoodFurn (PM, CO, VOC)	2005(≤50%), 2010(≤50%), 2015(≤50%), 2016(≤50%), 2019(≤50%)	Once/ 5 years.
StandByFurn1 (NO_X, VOC)	2005(≤50%), 2010(≤50%), 2015(≤50%), 2019(≤50%)	Once/ 5 years.
VennerDryr (PM)	2005 (≤50%), 2010(≤50%), 2015(≤50%), 2020(≤50%)	Once/ 5 years.

[Quoted text hidden]

Mullins, Robert A <robert.a.mullins@wv.gov>

Completeness Determination, Buckhannon Facility, Application No.: R30-09700029-2021

3 messages

Mullins, Robert A <Robert.A.Mullins@wv.gov> Wed, Mar 31, 2021 at 9:27 AM
To: "lance.miller@weyerhaeuser.com" <lance.miller@weyerhaeuser.com>
Cc: "Rutherford, Matthew" <Matthew.Rutherford@weyerhaeuser.com>, Jesse Hanshaw <jhanshaw@slrconsulting.com>

Your Title V renewal application for a permit to operate the above referenced facility was received by this Division on March 3, 2021. After review of said application, it has been determined that the application is administratively complete as submitted. Therefore, the above referenced facility qualifies for an Application Shield.

The applicant has the duty to supplement or correct the application. Any applicant who fails to submit any relevant facts or who has submitted incorrect information in a permit application shall, upon becoming aware of such failure or incorrect submittal, promptly submit such supplementary facts or corrected information. In addition, an applicant shall provide additional information as necessary to address any requirements that become applicable to the source after the date it filed a complete application but prior to release of a draft permit.

The submittal of a complete application shall not affect the requirement that any source have all **preconstruction permits** required under the rules of the Division.

If during the processing of this application it is determined that additional information is necessary to evaluate or take final action on this application, a request for such information will be made in writing with a reasonable deadline for a response. Until which time as your renewal permit is issued or denied, please continue to operate this facility in accordance with 45CSR30, section 6.3.c. which states: *If the Secretary fails to take final action to deny or approve a timely and complete permit application before the end of the term of the previous permit, the permit shall not expire until the renewal permit has been issued or denied, and any permit shield granted for the permit shall continue in effect during that time.* This protection shall cease to apply if, subsequent to the completeness determination made pursuant to paragraph 6.1.d. of 45CSR30 and as required by paragraph 4.1.b., the applicant fails to submit by the deadline specified in writing any additional information identified as being needed to process the application.

Please remember, **failure of the applicant to timely submit information required or requested to process the application may cause the Application Shield to be revoked.** Should you have any questions regarding this determination, please contact me.

Sincerely,

Robert Mullins

WV Department of Environmental Protection

Division of Air Quality

601 57th Street, SE

Charleston, WV 25304

Phone: (304)926-0499 ext. 41286

Jesse Hanshaw <jhanshaw@slrconsulting.com> Wed, Mar 31, 2021 at 9:44 AM
To: "Mullins, Robert A" <Robert.A.Mullins@wv.gov>

CAUTION: External email. Do not click links or open attachments unless you verify sender.

Your message

To: Jesse Hanshaw
Subject: Completeness Determination, Buckhannon Facility, Application No.: R30-09700029-2021
Sent: Wednesday, March 31, 2021 9:27:36 AM (UTC-05:00) Eastern Time (US & Canada)

was read on Wednesday, March 31, 2021 9:44:09 AM (UTC-05:00) Eastern Time (US & Canada).

Jesse Hanshaw
Principal Engineer

O 681-205-8949
C 304-545-8563
E jhanshaw@slrconsulting.com

SLR International Corporation
8 Capitol Street Suite 300, Charleston, WV 25301

Follow us on LinkedIn
Winners: RoSPA President's Award 2020

Confidentiality Notice and Disclaimer
This communication and any attachment(s) contain information which is confidential and may also be legally privileged. It is intended for the exclusive use of the recipient(s) to whom it is addressed. If you have received this communication in error, please e-mail us by return e-mail and then delete the e-mail from your system together with any copies of it. Any views or opinions are solely those of the author and do not represent those of SLR Management Ltd, or any of its subsidiaries, unless specifically stated.

Miller, Lance <Lance.Miller@weyerhaeuser.com> Wed, Mar 31, 2021 at 10:22 AM
To: "Mullins, Robert A" <Robert.A.Mullins@wv.gov>

[Quoted text hidden]

---------- Forwarded message ----------
From: "Miller, Lance" <Lance.Miller@weyerhaeuser.com>
To: "Mullins, Robert A" <Robert.A.Mullins@wv.gov>
Cc:
Bcc:

Date: Wed, 31 Mar 2021 14:22:58 +0000
Subject: [External] Read: Completeness Determination, Buckhannon Facility, Application No.: R30-09700029-2021
Your message

To: Miller, Lance
Subject: [EXTERNAL] Completeness Determination, Buckhannon Facility, Application No.: R30-09700029-2021
Sent: Wednesday, March 31, 2021 9:27:36 AM (UTC-05:00) Eastern Time (US & Canada)

was read on Wednesday, March 31, 2021 10:22:22 AM (UTC-05:00) Eastern Time (US & Canada).

Mullins, Robert A <robert.a.mullins@wv.gov>

WV DAQ Title V Permit Application Status for Weyerhaeuser NR Company; Buckhannon Facility

1 message

Mink, Stephanie R <Stephanie.R.Mink@wv.gov> Wed, Mar 3, 2021 at 1:12 PM
To: "Lance.Miller@Weyerhaeuser.com" <Lance.Miller@weyerhaeuser.com>, "Matthew.Rutherford@Weyerhaeuser.com" <Matthew.Rutherford@weyerhaeuser.com>, "jhanshaw@slrconsulting.com" <jhanshaw@slrconsulting.com>
Cc: "Mullins, Robert A" <Robert.A.Mullins@wv.gov>, "McCumbers, Carrie" <Carrie.McCumbers@wv.gov>

RE: Application Status

Weyerhaeuser NR Company

Buckhannon Facility

Facility ID No. 097-00029

Application No. R30-09700029-2021

Dear Mr. Miller,

Your application for a Title V Permit Renewal for Weyerhaeuser NR Company; Buckhannon Facility was received by this Division on March 3, 2021, and was assigned to Robert "R.A." Mullins.

Should you have any questions, please contact the assigned permit writer, Robert "R.A." Mullins, at 304-926-0499, extension 41286, or Robert.A.Mullins@wv.gov.

Stephanie Mink

Secretary 2

West Virginia Department of Environmental Protection

Division of Air Quality, Title V Permitting

601 57th Street SE

Charleston, WV 25304

Phone: 304-926-0499 x41281

Mullins, Robert A <robert.a.mullins@wv.gov>

Weyerhaeuser renewal

1 message

Mink, Stephanie R <Stephanie.R.Mink@wv.gov> Wed, Mar 3, 2021 at 1:12 PM
To: "Mullins, Robert A" <Robert.A.Mullins@wv.gov>

Here's the dated application and info sheet. The application has been indexed in AX and posted to the website and a confirmation email to the company will follow.

Have a great day!

Stephanie Mink

Secretary 2

West Virginia Department of Environmental Protection

Division of Air Quality, Title V Permitting

601 57th Street SE

Charleston, WV 25304

Phone: 304-926-0499 x41281

2 attachments

R30-09700029-2021 Weyerhaeuser renewal.pdf
2080K

R30-09700029-2021 info sheet.pdf
70K

Mullins, Robert A <robert.a.mullins@wv.gov>

FW: [External] Weyerhaeuser NR Company; Buckhannon Facility (Facility ID: 097-00029)

2 messages

McCumbers, Carrie <Carrie.McCumbers@wv.gov> Wed, Mar 3, 2021 at 12:23 PM
To: "Mink, Stephanie R" <Stephanie.R.Mink@wv.gov>, "Mullins, Robert A" <Robert.A.Mullins@wv.gov>

Please assign this renewal to R.A. as R30-09700029-2021.

Thanks,

Carrie

From: Chris Boggess <cboggess@slrconsulting.com>
Sent: Wednesday, March 3, 2021 11:58 AM
To: DEP Air Quality Permitting <DEPAirQualityPermitting@wv.gov>
Cc: Jesse Hanshaw <jhanshaw@slrconsulting.com>; Rutherford, Matthew <Matthew.Rutherford@weyerhaeuser.com>
Subject: [External] Weyerhaeuser NR Company; Buckhannon Facility (Facility ID: 097-00029)

CAUTION: External email. Do not click links or open attachments unless you verify sender.

To whom it may concern,

Please find attached a Title V Renewal Application submitted on behalf of Weyerhaeuser NR Company for the Buckhannon Facility (Facility ID: 097-000029) located in Upshur County, WV.

If you have any questions or comments, feel free to contact me

Thanks in advance

Chris

SLR

Chris Boggess

Senior Engineer

O 681-205-8949

E cboggess@slrconsulting.com

SLR International Corporation

8 Capitol Street Suite 300, Charleston, WV 25301

Follow us on LinkedIn

Winners: RoSPA President's Award 2020

Confidentiality Notice and Disclaimer

This communication and any attachment(s) contain information which is confidential and may also be legally privileged. It is intended for the exclusive use of the recipient(s) to whom it is addressed. If you have received this communication in error, please e-mail us by return e-mail and then delete the e-mail from your system together with any copies of it. Any views or opinions are solely those of the author and do not represent those of SLR Management Ltd, or any of its subsidiaries, unless specifically stated.

2 attachments

Email Cover Letter_Weyerhaeuser_Buckhannon_097-00029_0321.pdf
575K

T5 Renewal Application_WY_Buckhannon_097-00029_03-2021.pdf
2231K

Mink, Stephanie R <Stephanie.R.Mink@wv.gov> Wed, Mar 3, 2021 at 12:36 PM
To: "McCumbers, Carrie" <Carrie.McCumbers@wv.gov>, "Mullins, Robert A" <Robert.A.Mullins@wv.gov>

I'm working on it now.

Thanks
Stephanie

[Quoted text hidden]

Received
March 3, 2021
WV DEP/Div of Air Quality

Division of Air Quality Permit Application Submittal

Please find attached a permit application for : Weyerhaeuser NR Company; Buckhannon Facility
[Company Name; Facility Location]

- DAQ Facility ID (for existing facilities only): 097-00029
- Current 45CSR13 and 45CSR30 (Title V) permits associated with this process (for existing facilities only): R13-1843C / R30-09700029-2016

- Type of NSR Application (check all that apply):
  - ☐ Construction
  - ☐ Modification
  - ☐ Class I Administrative Update
  - ☐ Class II Administrative Update
  - ☐ Relocation
  - ☐ Temporary
  - ☐ Permit Determination

- Type of 45CSR30 (TITLE V) Application:
  - ☐ Title V Initial
  - ☒ Title V Renewal
  - ☐ Administrative Amendment**
  - ☐ Minor Modification**
  - ☐ Significant Modification**
  - ☐ Off Permit Change

****If the box above is checked, include the Title V revision information as ATTACHMENT S to the combined NSR/Title V application.**

- Payment Type:
  - ☐ Credit Card (Instructions to pay by credit card will be sent in the Application Status email.)
  - ☐ Check (Make checks payable to: WVDEP – Division of Air Quality)
    Mail checks to:
    WVDEP – DAQ – Permitting
    Attn: NSR Permitting Secretary
    601 57th Street, SE
    Charleston, WV 25304

Please wait until DAQ emails you the Facility ID Number and Permit Application Number. Please add these identifiers to your check or cover letter with your check.

- If the permit writer has any questions, please contact (all that apply):
  - ☒ Responsible Official/Authorized Representative
    - Name: Lance Miller
    - Email: lance.miller@weyerhaeuser.com
    - Phone Number: 304-473-5490
  - ☒ Company Contact
    - Name: Matthew Rutherford
    - Email: matthew.rutherford@weyerhaeuser.com
    - Phone Number: 304-473-5407
  - ☒ Consultant
    - Name: Jesse Hanshaw
    - Email: jhanshaw@slrconsulting.com
    - Phone Number: 304-545-8563

Weyerhaeuser

Weyerhaeuser NR Company

Buckhannon Facility

Facility ID No. 097-00029

Buckhannon, West Virginia

Title V Operating Permit Renewal Application

SLR Ref: 116.00687.00055

March 2021

SLR

Title V Operating Permit Renewal Application

Prepared for:

Weyerhaeuser NR Company
41 TJM Drive
Buckhannon, West Virginia 26201

This document has been prepared by SLR International Corporation. The material and data in this permit application were prepared under the supervision and direction of the undersigned.

Chris Boggess
Senior Engineer

Jesse Hanshaw, P.E.
Principal Engineer

CONTENTS

ATTACHMENTS

APPLICATION FOR PERMIT
ATTACHMENT A..... AREA MAP
ATTACHMENT B..... PLOT PLAN
ATTACHMENT C..... PROCESS FLOW DIAGRAM
ATTACHMENT D..... EQUIPMENT TABLE
ATTACHMENT E..... EMISSION UNIT FORM(S)
ATTACHMENT F..... SCHEDULE OF COMPLIANCE FORM (SEE NOTE)
ATTACHMENT G..... AIR POLLUTION CONTROL DEVICE FORM (S)
ATTACHMENT H..... COMPLIANCE ASSURANCE MONITORING FORM (SEE NOTE)

Notes:

ATTACHMENT F – N/A – Source is in compliance with all facility wide requirements
ATTACHMENT H – N/A – No CAM plan requirements at the facility

APPLICATION FOR PERMIT

Title V Operating Permit Renewal Application

Buckhannon Facility, Facility ID No. 097-00029
Buckhannon, West Virginia

Weyerhaeuser NR Company
41 TJM Drive
Buckhannon, West Virginia

March 2021

WEST VIRGINIA DEPARTMENT OF ENVIRONMENTAL PROTECTION
DIVISION OF AIR QUALITY

601 57th Street SE
Charleston, WV 25304
Phone: (304) 926-0475
www.wvdep.org/daq

Received
March 3, 2021
WV DEP/Div of Air Quality

INITIAL/RENEWAL TITLE V PERMIT APPLICATION - GENERAL FORMS

Section 1: General Information

1. **Name of Applicant (As registered with the WV Secretary of State's Office):** Weyerhaeuser NR Company	**2. Facility Name or Location:** Buckhannon Facility
3. DAQ Plant ID No.: 0 9 7 — 0 0 0 2 9	**4. Federal Employer ID No. (FEIN):** 2 6 3 4 8 1 2 5 7

5. **Permit Application Type:**

☐ Initial Permit — When did operations commence? 07/21/1995
☒ Permit Renewal — What is the expiration date of the existing permit? 09/07/2021
☐ Update to Initial/Renewal Permit Application

6. Type of Business Entity:

☒ Corporation ☐ Governmental Agency
☐ Partnership ☐ Limited Partnership

7. Is the Applicant the:

☐ Owner ☐ Operator ☒ Both

If the Applicant is not both the owner and operator, please provide the name and address of the other party.

_____
_____
_____

8. Number of onsite employees:

284

9. Governmental Code:

☒ Privately owned and operated; 0
☐ Federally owned and operated; 1
☐ State government owned and operated; 2
☐ County government owned and operated; 3
☐ Municipality government owned and operated; 4
☐ District government owned and operated; 5

10. Business Confidentiality Claims

Does this application include confidential information (per 45CSR31)? ☐ Yes ☒ No

If yes, identify each segment of information on each page that is submitted as confidential, and provide justification for each segment claimed confidential, including the criteria under 45CSR§31-4.1, and in accordance with the DAQ's *"PRECAUTIONARY NOTICE-CLAIMS OF CONFIDENTIALITY"* guidance.

11. Mailing Address		
Street or P.O. Box: 41 TJM Drive		
City: Buckhannon	**State:** WV	**Zip: 26201-**
Telephone Number: (304) 472-8564	**Fax Number:** (304) 472-7395	

12. Facility Location		
Street: 41 TJM Drive	**City:** Buckhannon	**County:** Upshur
UTM Easting: 568.00 km	**UTM Northing:** 4,316.50 km	**Zone:** ☒ 17 or ☐ 18
Directions: From Charleston, Take Interstate 79 North to the Weston/Buckhannon Exit (Exit #99), Proceed on route US 33 East towards Buckhannon, approx. 14 miles, after passing by Route 20 (Phillipi/ Buckhannon) Exit - Take the 2nd Exit on the left onto Industrial Park Road (Route 15/33) Continue on Industrial Park Road for approx. 1 mile until coming to Stop sign, Plant straight ahead		
Portable Source? ☐ Yes ☒ No		
Is facility located within a nonattainment area? ☐ Yes ☒ No		**If yes, for what air pollutants?**
Is facility located within 50 miles of another state? ☒ Yes ☐ No		**If yes, name the affected state(s).** Maryland Virginia
Is facility located within 100 km of a Class I Area[1]? ☒ Yes ☐ No **If no, do emissions impact a Class I Area[1]?** ☐ Yes ☐ No		**If yes, name the area(s).** Dolly Sods Wilderness Area Otter Creek Wilderness Area

[1] *Class I areas include Dolly Sods and Otter Creek Wilderness Areas in West Virginia, and Shenandoah National Park and James River Face Wilderness Area in Virginia.*

13. Contact Information		
Responsible Official: Lance Miller		**Title:** Mill Manager
Street or P.O. Box: 41 TJM Drive		
City: Buckhannon	**State:** WV	**Zip: 26201-**
Telephone Number: (304) 473-5490	**Fax Number:** (304) 472-7395	
E-mail address: Lance.Miller@Weyerhaeuser.com		
Environmental Contact: Matthew Rutherford		**Title:** Environmental Manager
Street or P.O. Box: 41 TJM Drive		
City: Buckhannon	**State:** WV	**Zip: 26201-**
Telephone Number: (304) 473-5407	**Fax Number:** (304) 472-7395	
E-mail address: Matthew.Rutherford@Weyerhaeuser.com		
Application Preparer: Jesse Hanshaw		**Title:** Principal Engineer
Company: SLR International Corporation		
Street or P.O. Box: 8 Capitol Street, Suite 300		
City: Charleston	**State:** WV	**Zip: 25301-**
Telephone Number: (304) 545-8563	**Fax Number:** (681) 205-8969	
E-mail address: jhanshaw@slrconsulting.com		

14. Facility Description

List all processes, products, NAICS and SIC codes for normal operation, in order of priority. Also list any process, products, NAICS and SIC codes associated with any alternative operating scenarios if different from those listed for normal operation.

Process	Products	NAICS	SIC
Veneer Dryers	Reconstituted Wood Products	321213	2439
Microllam Presses	Reconstituted Wood Products	321213	2439
Parallam Press	Reconstituted Wood Products	321213	2439

Provide a general description of operations.

Weyerhaeuser Company is an engineered wood products facility covered by SIC Code 2439 and the NAICS Code 321213. The facility has the potential to operate twenty-four hours per day, seven days per week and fifty-two weeks per year. The facility consists of one (1) wood-fired furnace, one (1) propane fired furnace, two (2) veneer dryers, three (3) wood presses, six (6) storage tanks of various sizes, six (6) baghouse systems, one (1) ESP, one (1) multiclone, and two (2) spray booths.

15. Provide an **Area Map** showing plant location as **ATTACHMENT A**.

16. Provide a **Plot Plan(s)**, e.g. scaled map(s) and/or sketch(es) showing the location of the property on which the stationary source(s) is located as **ATTACHMENT B**. For instructions, refer to "Plot Plan - Guidelines."

17. Provide a detailed **Process Flow Diagram(s)** showing each process or emissions unit as **ATTACHMENT C**. Process Flow Diagrams should show all emission units, control equipment, emission points, and their relationships.

Section 2: Applicable Requirements

18. Applicable Requirements Summary	
Instructions: Mark all applicable requirements.	
☒ SIP	☐ FIP
☒ Minor source NSR (45CSR13)	☐ PSD (45CSR14)
☒ NESHAP (45CSR34)	☐ Nonattainment NSR (45CSR19)
☒ Section 111 NSPS	☒ Section 112(d) MACT standards
☐ Section 112(g) Case-by-case MACT	☐ 112(r) RMP
☐ Section 112(i) Early reduction of HAP	☐ Consumer/commercial prod. reqts., section 183(e)
☐ Section 129 Standards/Reqts.	☐ Stratospheric ozone (Title VI)
☐ Tank vessel reqt., section 183(f)	☐ Emissions cap 45CSR§30-2.6.1
☐ NAAQS, increments or visibility (temp. sources)	☒ 45CSR27 State enforceable only rule
☒ 45CSR4 State enforceable only rule	☐ Acid Rain (Title IV, 45CSR33)
☐ Emissions Trading and Banking (45CSR28)	☐ **C**ompliance **A**ssurance **M**onitoring (40CFR64)
☐ CAIR NO_x Annual Trading Program (45CSR39)	☐ CAIR NO_x Ozone Season Trading Program (45CSR40)
☐ CAIR SO_2 Trading Program (45CSR41)	

19. Non Applicability Determinations

List all requirements which the source has determined not applicable and for which a permit shield is requested. The listing shall also include the rule citation and the reason why the shield applies.

45CSR17 – Weyerhaeuser Buckhannon Facility is subject to 45CSR7 which exempts it from 45CSR17, To Prevent and Control Particulate Matter Air Pollution from Materials Handling, Preparation, Storage and Other Sources of Fugitive Particulate Matter, as stated in 45CSR§7-10.2.

45CSR21 – Regulation to Prevent and Control Air Pollution from the Emission of Volatile Organic Compounds. Weyerhaeuser Buckhannon Facility is not located Cabell, Kanawha, Putnam, Wayne, or Wood counties.

45CSR33 **–** Acid Rain Provisions and Permits do not apply to Weyerhaeuser Buckhannon Facility because it is not considered a Title IV (Acid Rain) Source.

☒ Permit Shield

19. Non Applicability Determinations *(Continued)* *- Attach additional pages as necessary.*

List all requirements which the source has determined not applicable and for which a permit shield is requested. The listing shall also include the rule citation and the reason why the shield applies.

40 C.F.R. Part 63 Subpart H – National Emission Standards for Organic Hazardous Air Pollutants for Equipment Leaks. Buckhannon Facility does not have a piece of equipment that either contains or contacts a fluid (liquid or gas) that is at least 5 percent by weight of total organic HAP's.

40 C.F.R. Part 63 Subpart JJ – National Emission Standards for Wood Furniture Manufacturing Operations. Weyerhaeuser Buckhannon Facility is not engaged in the manufacture of wood furniture or wood furniture components.

40 C.F.R. Part 63 Subpart QQQQ – National Emission Standards for Surface Coating of Wood Building Products. Weyerhaeuser Buckhannon Facility is not engaged in the manufacture of wood building products.

40 C.F.R. Part 64 – CAM applies to any pollutant specific emissions units (PSEU) that satisfy all of the applicability criteria requirements of 40 C.F.R. § 64.2 (a), i.e., that (1) have pre-control device regulated pollutant potential emissions (PTE) equal to or greater than the "major" threshold limits to be classified as a major source; (2) are subject to an emissions limitation or standard and; (3) have a control device to achieve compliance with such emission limitation or standard that does not have specific monitoring provisions meeting the definition of CAM. Since this facility does not have a PSEU that satisfies the requirements, it is not subject to the CAM rule.

☒ Permit Shield

20. Facility-Wide Applicable Requirements

List all facility-wide applicable requirements. For each applicable requirement, include the underlying rule/regulation citation and/or construction permit with the condition number. (*Note: Title V permit condition numbers alone are not the underlying applicable requirements*).

1) Requirement: 45CSR§6-3.1. Permit Condition: 3.1.1.
2) Requirement: 45CSR§6-3.2. Permit Condition: 3.1.2.
3) Requirement: 40 C.F.R. 61 & 45CSR34 Permit Condition: 3.1.3.
4) Requirement: 45CSR§4-3.1 Permit Condition: 3.1.4.
5) Requirement: 45CSR§11-5.2 Permit Condition: 3.1.5.
6) Requirement: W.Va. Code § 22-5-4(a)(14) Permit Condition: 3.1.6.
7) Requirement: 40 C.F.R. 82, Subpart F Permit Condition: 3.1.7.
8) Requirement: 40 C.F.R. 68 Permit Condition: 3.1.8.
9) Requirement: 45CSR§7-5.1 & 5.2.; 45CSR13, R13-1843, 4.1.15 Permit Condition: 3.1.9.
10) Requirement: WV Code § 22-5-4(a)(14-15) and 45CSR13 Permit Condition: 3.3.1.
11) Requirement: 45CSR§30-5.1.c.2.A.; 45CSR13, R13-1843, 4.3.1. Permit Condition: 3.4.1.
12) Requirement: 45CSR§30-5.1.c.2.B. Permit Condition: 3.4.2.
13) Requirement: 45CSR§30-5.1.c. Permit Condition: 3.4.3.
14) Requirement: 45CSR13, R13-1843, 4.3.2 Permit Condition: 3.4.4.
15) Requirement: 45CSR13, R13-1843, 4.3.3 Permit Condition: 3.4.5.
16) Requirement: 45CSR§30-4.4. and 5.1.c.3.D. Permit Condition: 3.5.1.
17) Requirement: 45CSR§30-5.1.c.3.E. Permit Condition: 3.5.2.
18) Requirement: 45CSR§30-8. Permit Condition: 3.5.4.
19) Requirement: 45CSR§30-5.3.e. Permit Condition: 3.5.5.
20) Requirement: 45CSR§30-5.1.c.3.A. Permit Condition: 3.5.6.
21) Requirement: 45CSR§30-5.1.c.3.C. and 45CSR§30-5.1.c.3.B. Permit Condition: 3.5.8.
22) Requirement: 45CSR§30-4.3.h.1.B. Permit Condition: 3.5.9.

☒ Permit Shield

For all facility-wide applicable requirements listed above, provide monitoring/testing / recordkeeping / reporting which shall be used to demonstrate compliance. If the method is based on a permit or rule, include the condition number and/or citation. (Note: Each requirement listed above must have an associated method of demonstrating compliance. If there is not already a required method in place, then a method must be proposed.)

1) Reporting - Permit Condition 3.1.2.
2) Reporting - Permit Condition 3.1.2.
3) Notification - Permit Condition 3.1.3.
4) Recordkeeping - Permit Condition: 3.4.3.
5) Reporting - Permit Condition: 3.1.5.
6) Reporting - Permit Condition: 3.1.6.
7) Recordkeeping - Permit Condition: 3.1.7.
8) Reporting - Permit Condition: 3.1.8.
9) Monitoring/Recordkeeeping - Permit Conditions: 3.1.9.
10) Testing - Permit Condition: 3.3.1.
11) Recordkeeping - Permit Condition: 3.4.1.
12) Recordkeeping - Permit Condition: 3.4.2.
13) Recordkeeping - Permit Condition: 3.4.3.
14) Recordkeeping - Permit Condition: 3.4.4.
15) Recordkeeping - Permit Condition: 3.4.5.
16) Reporting - Permit Condition: 3.5.1.
17) Reporting - Permit Condition: 3.5.2.
18) Reporting - Permit Condition: 3.5.4.
19) Reporting - Permit Condition: 3.5.5.
20) Reporting - Permit Condition: 3.5.6.
21) Reporting - Permit Condition: 3.5.8.
22) Reporting, Notify & Submit Compliance Schedule - Permit Condition: 3.5.9.

Are you in compliance with all facility-wide applicable requirements? ☒ Yes ☐ No

If no, complete the **Schedule of Compliance Form** as **ATTACHMENT F**.

21. Active Permits/Consent Orders		
Permit or Consent Order Number	Date of Issuance MM/DD/YYYY	List any Permit Determinations that Affect the Permit *(if any)*
R13-1843C	11/25/2015	
	/ /	
	/ /	
	/ /	
	/ /	
	/ /	
	/ /	
	/ /	
	/ /	
	/ /	
	/ /	
	/ /	
	/ /	
	/ /	
	/ /	
	/ /	
	/ /	
	/ /	
	/ /	
	/ /	
	/ /	
	/ /	
	/ /	
	/ /	
	/ /	

22. Inactive Permits/Obsolete Permit Conditions		
Permit Number	Date of Issuance	Permit Condition Number
R13-1843B	03/27/2009	
R13-1843A	07/08/1997	
R13-1843R	12/09/1996	
R13-1843	05/08/1995	
R13-1703	05/11/1994	
	/ /	
	/ /	
	/ /	
	/ /	
	/ /	
	/ /	
	/ /	
	/ /	
	/ /	
	/ /	
	/ /	
	/ /	
	/ /	
	/ /	
	/ /	
	/ /	
	/ /	
	/ /	
	/ /	

Section 3: Facility-Wide Emissions

23. Facility-Wide Emissions Summary [Tons per Year]	
Criteria Pollutants	Potential Emissions
Carbon Monoxide (CO)	185.67
Nitrogen Oxides (NO_X)	208.05
Lead (Pb)	1.49
Particulate Matter ($PM_{2.5}$)[1]	12.23
Particulate Matter (PM_{10})[1]	59.22
Total Particulate Matter (TSP)	214.87
Sulfur Dioxide (SO_2)	8.76
Volatile Organic Compounds (VOC)	234.4
Hazardous Air Pollutants[2]	Potential Emissions
Formaldehyde	6.79
Methanol	54.62
Phenol	0.37
MDI	12.2
Regulated Pollutants other than Criteria and HAP	Potential Emissions

[1]$PM_{2.5}$ and PM_{10} are components of TSP.
[2]For HAPs that are also considered PM or VOCs, emissions should be included in both the HAPs section and the Criteria Pollutants section.

Section 4: Insignificant Activities

24. Insignificant Activities (Check all that apply)		
☒	1.	Air compressors and pneumatically operated equipment, including hand tools.
☐	2.	Air contaminant detectors or recorders, combustion controllers or shutoffs.
☒	3.	Any consumer product used in the same manner as in normal consumer use, provided the use results in a duration and frequency of exposure which are not greater than those experienced by consumer, and which may include, but not be limited to, personal use items; janitorial cleaning supplies, office supplies and supplies to maintain copying equipment.
☒	4.	Bathroom/toilet vent emissions.
☒	5.	Batteries and battery charging stations, except at battery manufacturing plants.
☐	6.	Bench-scale laboratory equipment used for physical or chemical analysis, but not lab fume hoods or vents. Many lab fume hoods or vents might qualify for treatment as insignificant (depending on the applicable SIP) or be grouped together for purposes of description.
☐	7.	Blacksmith forges.
☒	8.	Boiler water treatment operations, not including cooling towers.
☒	9.	Brazing, soldering or welding equipment used as an auxiliary to the principal equipment at the source.
☐	10.	CO_2 lasers, used only on metals and other materials which do not emit HAP in the process.
☒	11.	Combustion emissions from propulsion of mobile sources, except for vessel emissions from Outer Continental Shelf sources.
☒	12.	Combustion units designed and used exclusively for comfort heating that use liquid petroleum gas or natural gas as fuel.
☒	13.	Comfort air conditioning or ventilation systems not used to remove air contaminants generated by or released from specific units of equipment.
☐	14.	Demineralized water tanks and demineralizer vents.
☐	15.	Drop hammers or hydraulic presses for forging or metalworking.
☒	16.	Electric or steam-heated drying ovens and autoclaves, but not the emissions from the articles or substances being processed in the ovens or autoclaves or the boilers delivering the steam.
☐	17.	Emergency (backup) electrical generators at residential locations.
☐	18.	Emergency road flares.
☐	19.	Emission units which do not have any applicable requirements and which emit criteria pollutants (CO, NO_x, SO_2, VOC and PM) into the atmosphere at a rate of less than 1 pound per hour and less than 10,000 pounds per year aggregate total for each criteria pollutant from all emission units. Please specify all emission units for which this exemption applies along with the quantity of criteria pollutants emitted on an hourly and annual basis: _____ _____ _____ _____ _____ _____ _____ _____ _____

24. Insignificant Activities (Check all that apply)		
☐	20.	Emission units which do not have any applicable requirements and which emit hazardous air pollutants into the atmosphere at a rate of less than 0.1 pounds per hour and less than 1,000 pounds per year aggregate total for all HAPs from all emission sources. This limitation cannot be used for any source which emits dioxin/furans nor for toxic air pollutants as per 45CSR27. Please specify all emission units for which this exemption applies along with the quantity of hazardous air pollutants emitted on an hourly and annual basis: _____ _____ _____ _____ _____
☐	21.	Environmental chambers not using hazardous air pollutant (HAP) gases.
☐	22.	Equipment on the premises of industrial and manufacturing operations used solely for the purpose of preparing food for human consumption.
☐	23.	Equipment used exclusively to slaughter animals, but not including other equipment at slaughterhouses, such as rendering cookers, boilers, heating plants, incinerators, and electrical power generating equipment.
☒	24.	Equipment used for quality control/assurance or inspection purposes, including sampling equipment used to withdraw materials for analysis.
☒	25.	Equipment used for surface coating, painting, dipping or spray operations, except those that will emit VOC or HAP.
☒	26.	Fire suppression systems.
☒	27.	Firefighting equipment and the equipment used to train firefighters.
☐	28.	Flares used solely to indicate danger to the public.
☐	29.	Fugitive emission related to movement of passenger vehicle provided the emissions are not counted for applicability purposes and any required fugitive dust control plan or its equivalent is submitted.
☐	30.	Hand-held applicator equipment for hot melt adhesives with no VOC in the adhesive formulation.
☒	31.	Hand-held equipment for buffing, polishing, cutting, drilling, sawing, grinding, turning or machining wood, metal or plastic.
☐	32.	Humidity chambers.
☒	33.	Hydraulic and hydrostatic testing equipment.
☒	34.	Indoor or outdoor kerosene heaters.
☒	35.	Internal combustion engines used for landscaping purposes.
☐	36.	Laser trimmers using dust collection to prevent fugitive emissions.
☐	37.	Laundry activities, except for dry-cleaning and steam boilers.
☒	38.	Natural gas pressure regulator vents, excluding venting at oil and gas production facilities.
☐	39.	Oxygen scavenging (de-aeration) of water.
☐	40.	Ozone generators.
☒	41.	Plant maintenance and upkeep activities (e.g., grounds-keeping, general repairs, cleaning, painting, welding, plumbing, re-tarring roofs, installing insulation, and paving parking lots) provided these activities are not conducted as part of a manufacturing process, are not related to the source's primary business activity, and not otherwise triggering a permit modification. (Cleaning and painting activities qualify if they are not subject to VOC or HAP control requirements. Asphalt batch plant

24. Insignificant Activities (Check all that apply)		
		owners/operators must still get a permit if otherwise requested.)
☐	42.	Portable electrical generators that can be moved by hand from one location to another. "Moved by Hand" means that it can be moved without the assistance of any motorized or non-motorized vehicle, conveyance, or device.
☐	43.	Process water filtration systems and demineralizers.
☒	44.	Repair or maintenance shop activities not related to the source's primary business activity, not including emissions from surface coating or de-greasing (solvent metal cleaning) activities, and not otherwise triggering a permit modification.
☒	45.	Repairs or maintenance where no structural repairs are made and where no new air pollutant emitting facilities are installed or modified.
☒	46.	Routing calibration and maintenance of laboratory equipment or other analytical instruments.
☐	47.	Salt baths using nonvolatile salts that do not result in emissions of any regulated air pollutants. Shock chambers.
☐	48.	Shock chambers.
☐	49.	Solar simulators.
☐	50.	Space heaters operating by direct heat transfer.
☒	51.	Steam cleaning operations.
☐	52.	Steam leaks.
☐	53.	Steam sterilizers.
☒	54.	Steam vents and safety relief valves.
☒	55.	Storage tanks, reservoirs, and pumping and handling equipment of any size containing soaps, vegetable oil, grease, animal fat, and nonvolatile aqueous salt solutions, provided appropriate lids and covers are utilized.
☒	56.	Storage tanks, vessels, and containers holding or storing liquid substances that will not emit any VOC or HAP. Exemptions for storage tanks containing petroleum liquids or other volatile organic liquids should be based on size limits such as storage tank capacity and vapor pressure of liquids stored and are not appropriate for this list.
☐	57.	Such other sources or activities as the Director may determine.
☒	58.	Tobacco smoking rooms and areas.
☐	59.	Vents from continuous emissions monitors and other analyzers.

Section 5: Emission Units, Control Devices, and Emission Points

25. Equipment Table
Fill out the **Title V Equipment Table** and provide it as **ATTACHMENT D**.
26. Emission Units
For each emission unit listed in the **Title V Equipment Table**, fill out and provide an **Emission Unit Form** as **ATTACHMENT E**.
For each emission unit not in compliance with an applicable requirement, fill out a **Schedule of Compliance Form** as **ATTACHMENT F**.
27. Control Devices
For each control device listed in the **Title V Equipment Table**, fill out and provide an **Air Pollution Control Device Form** as **ATTACHMENT G**.
For any control device that is required on an emission unit in order to meet a standard or limitation for which the potential pre-control device emissions of an applicable regulated air pollutant is greater than or equal to the Title V Major Source Threshold Level, refer to the **Compliance Assurance Monitoring (CAM) Form(s)** for CAM applicability. Fill out and provide these forms, if applicable, for each Pollutant Specific Emission Unit (PSEU) as **ATTACHMENT H**.

Section 6: Certification of Information

28. Certification of Truth, Accuracy and Completeness and Certification of Compliance

*Note: This Certification must be signed by a responsible official. The **original**, signed in **blue ink**, must be submitted with the application. Applications without an **original** signed certification will be considered as incomplete.*

a. Certification of Truth, Accuracy and Completeness

I certify that I am a responsible official (as defined at 45CSR§30-2.38) and am accordingly authorized to make this submission on behalf of the owners or operators of the source described in this document and its attachments. I certify under penalty of law that I have personally examined and am familiar with the statements and information submitted in this document and all its attachments. Based on my inquiry of those individuals with primary responsibility for obtaining the information, I certify that the statements and information are to the best of my knowledge and belief true, accurate, and complete. I am aware that there are significant penalties for submitting false statements and information or omitting required statements and information, including the possibility of fine and/or imprisonment.

b. Compliance Certification

Except for requirements identified in the Title V Application for which compliance is not achieved, I, the undersigned hereby certify that, based on information and belief formed after reasonable inquiry, all air contaminant sources identified in this application are in compliance with all applicable requirements.

Responsible official (type or print)

Name: Lance Miller	Title: Plant Manager

Responsible official's signature:

Signature: _____ Signature Date: 3/3/21

(Must be signed and dated in blue ink)

Note: Please check all applicable attachments included with this permit application:

☒	ATTACHMENT A: Area Map
☒	ATTACHMENT B: Plot Plan(s)
☒	ATTACHMENT C: Process Flow Diagram(s)
☒	ATTACHMENT D: Equipment Table
☒	ATTACHMENT E: Emission Unit Form(s)
☐	ATTACHMENT F: Schedule of Compliance Form(s)
☒	ATTACHMENT G: Air Pollution Control Device Form(s)
☐	ATTACHMENT H: Compliance Assurance Monitoring (CAM) Form(s)

Received
March 3, 2021
WV DEP/Div of Air Quality

All of the required forms and additional information can be found and downloaded from, the DEP website at www.wvdep.org/aq, requested by phone (304) 926-0475, and/or obtained through the mail.

ATTACHMENT A

AREA MAP

Title V Operating Permit Renewal Application

Buckhannon Facility, Facility ID No. 097-00029
Buckhannon, West Virginia

Weyerhaeuser NR Company
41 TJM Drive
Buckhannon, West Virginia

March 2021

PLANT NORTH

N

34.09°

WETLAND MITIGATION AREA

PROPOSED BOUNDARY LINE= 113.55 ACRES

END STONE N 50+88.18 E 20+33.88

ISSUED FOR CONSTRUCTION

DATE X BY

MID-SOUTH ENGINEERING COMPANY

NO.	DATE	BY	DESCREPT
NO.	DATE	BY	DESCREPT
REV3	DATE3	BY NAME3	DESCREPT DESCREV3
REV2	DATE2	NAME2	DESCREV2
REV1	DATE1	NAME1	DESCREV1
NO.	DATE	BY	DESCRIPTION

REVISIONS

MID-SOUTH Engineering Co.
1858 Malvern Ave.- P.O. Box 1399
Hot Springs, Arkansas 71901

DRAWING TITLE

CLIENT LOCATION

SCALE	DRN.	NAME	DATE	DRAWING NO.
SCALE	CKD.	NAME	DATE	DRAWING
	APP.	NAME	DATE	

ATTACHMENT B

PLOT PLAN

Title V Operating Permit Renewal Application

Buckhannon Facility, Facility ID No. 097-00029
Buckhannon, West Virginia

Weyerhaeuser NR Company
41 TJM Drive
Buckhannon, West Virginia

March 2021

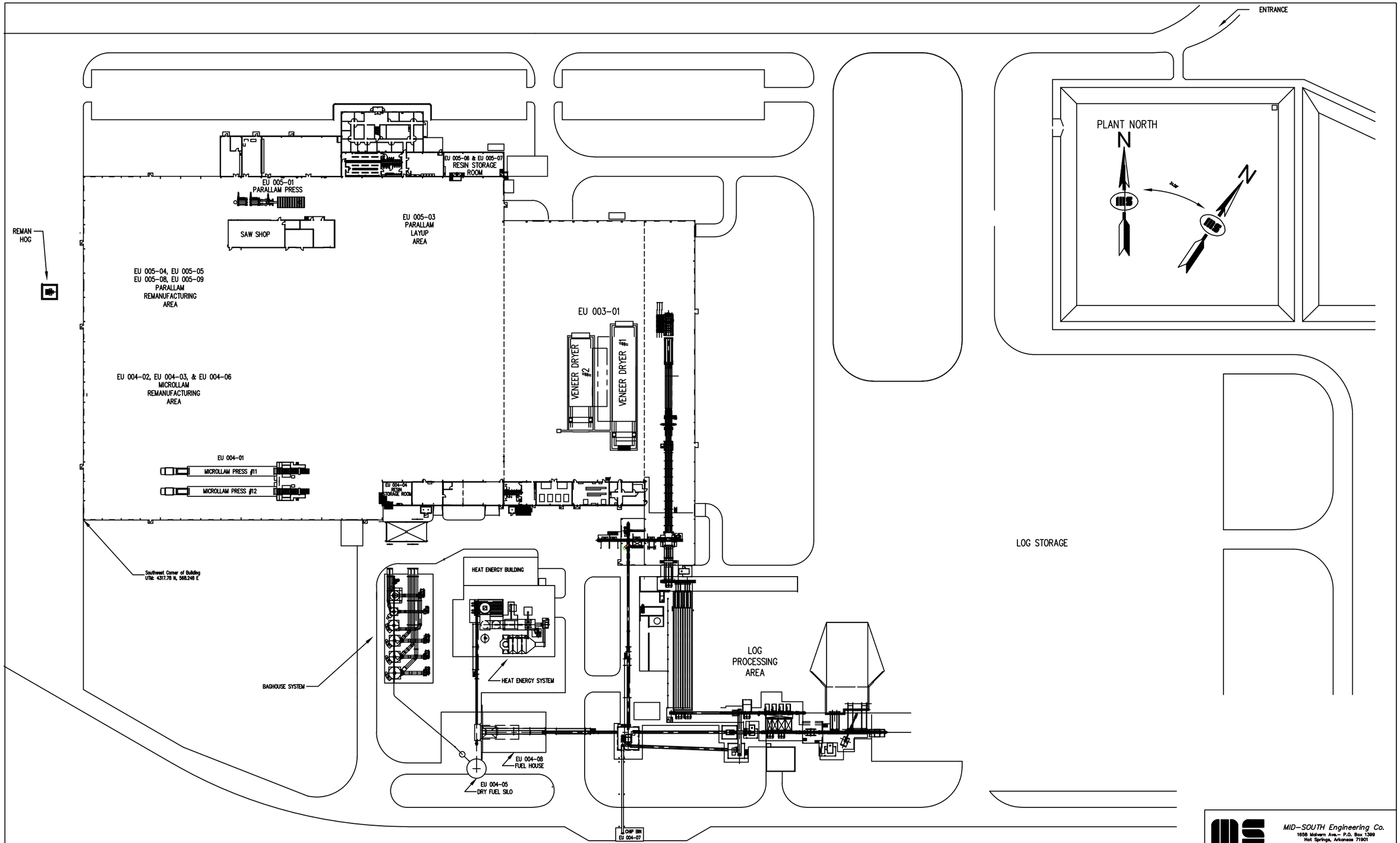

NOTES:

1. THE HEAT ENERGY SYSTEM INCLUDES: WOOD-FIRED FURNACE (EU 001-01), STAND-BY FURNACE (EU 001-02), ELECTROSTATIC PRECIPITATOR (ESP), AND MULTICLONE
2. THE BAGHOUSE SYSTEM INCLUDES: BGHS1, BGHS2A, BGHS2B, BGHS3, BGHS4, AND BGHS5

MID-SOUTH Engineering Co.
1658 Midvern Ave.– P.O. Box 1399
Hot Springs, Arkansas 71901

PLANT GENERAL
EQUIPMENT LAYOUT

WEYERHAEUSER NR COMPANY
BUCKHANNON, WEST VIRGINIA

SCALE	DRN.	JDG	4-12-1994	DRAWING NO.
1"=50'	REV.	MHR	11-11-2014	1518-10000-M03

ATTACHMENT C

PROCESS FLOW DIAGRAM

Title V Operating Permit Renewal Application

Buckhannon Facility, Facility ID No. 097-00029
Buckhannon, West Virginia

Weyerhaeuser NR Company
41 TJM Drive
Buckhannon, West Virginia

March 2021

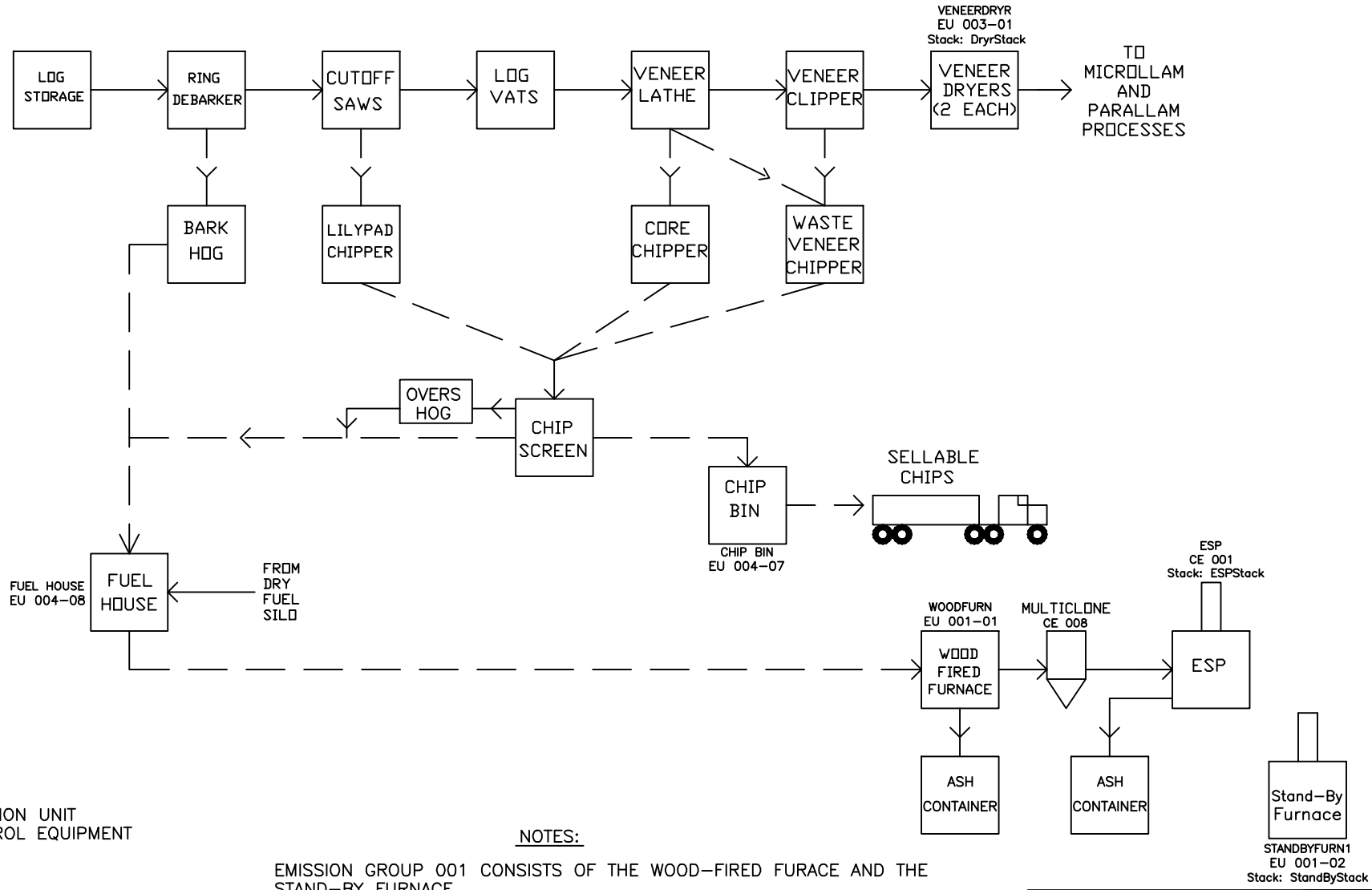

EU = EMISSION UNIT
CE = CONTROL EQUIPMENT

NOTES:

EMISSION GROUP 001 CONSISTS OF THE WOOD-FIRED FURACE AND THE STAND-BY FURNACE.

EMISSION GROUP 002 CONSISTS OF THE LOG STORAGE, RING DEBARKER, CUTOFF SAWS, LOG VATS, BARK HOG, LILYPAD CHIPPER, AND CHIP SCREEN.

EMISSION GROUP 003 CONSISTS OF THE VENEER DRYERS.

THE UNIT I.D. NUMBERS AND THE LOCAL I.D.'S ARE SHOWN AT THE INDIVIDUAL UNITS.

EQUIPMENT CONTAINED WITHIN THE MANUFACTURING BUILDING INCLUDES: THE VENEER LATHE, VENEER CLIPPER, VENEER DRYERS, WASTE VENEER CHIPPER, AND CORE CHIPPER.

LEGEND

WOOD WASTE CONVEYORS

MAIN PROCESS

Weyerhaeuser NR Company
Buckhannon, WV Plant

LOG PROCESSING AND HEAT ENERGY SYSTEMS

DRAWING NO: TFPFD1.DWG

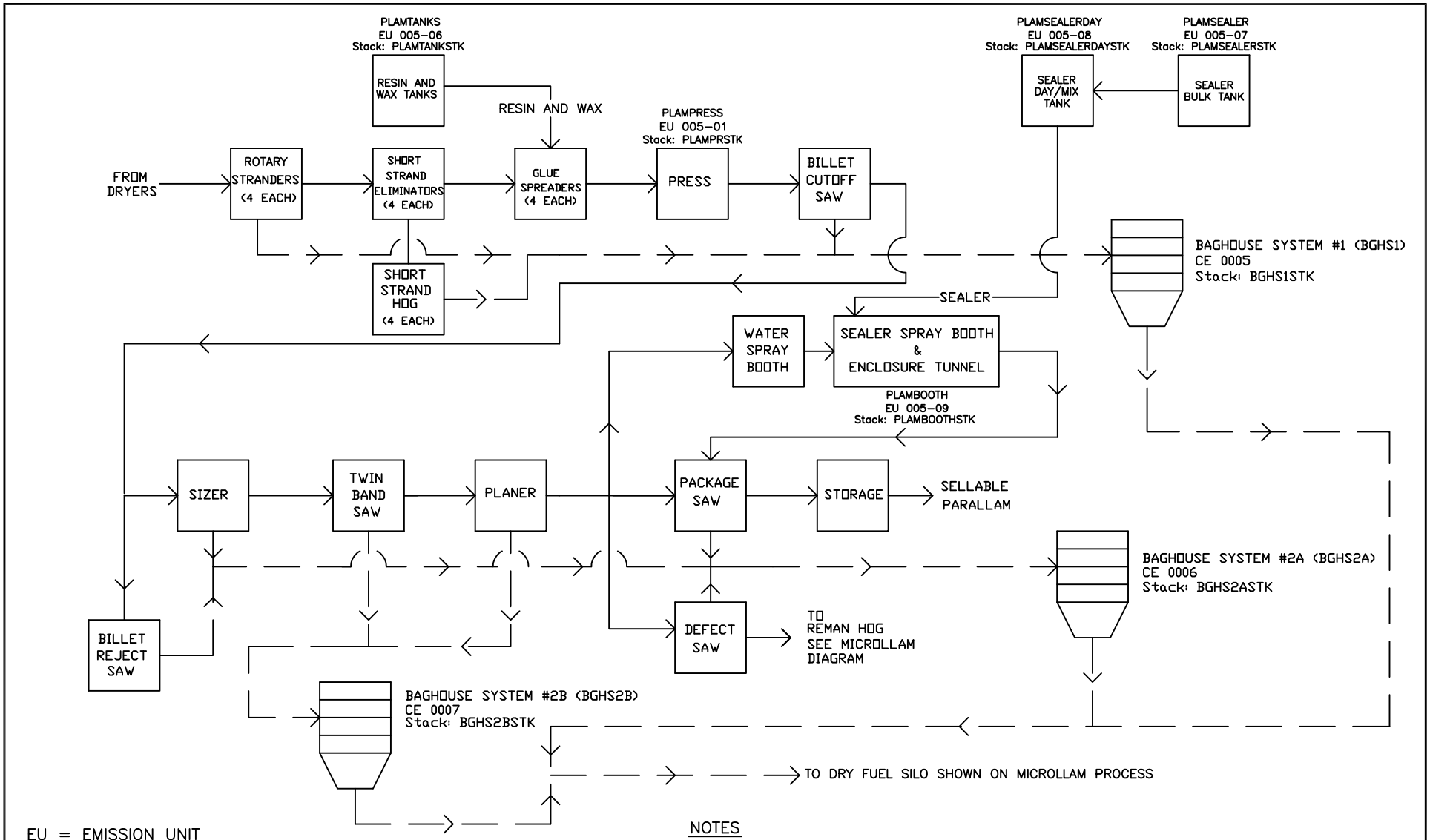

EU = EMISSION UNIT
CE = CONTROL EQUIPMENT

NOTES

ENTIRE AREA IS CONTAINED IN EMISSION GROUP 005.

EMISSION UNIT 005-03 (PLAMLAYUP) CONTAINS THE FOLLOWING EQUIPMENT: STRANDERS, SHORT STRAND HOGS, AND THE BILLET CUTOFF SAW.

EMISSION UNIT 005-04 (PLAMREMAN1) CONTAINS THE FOLLOWING EQUIPMENT: SIZER, BILLET REJECT SAW, PACKAGE SAW, AND DEFECT SAW.

EMISSION UNIT 005-05 (PLAMREMAN2) CONTAINS THE FOLLOWING EQUIPMENT: TWIN BAND SAW AND THE PLANER.

UNLESS LISTED IN THE NOTES SECTION, THE UNIT I.D. NUMBERS AND THE LOCAL I.D.'S ARE LISTED AT THE INDIVIDUAL UNITS.

LEGEND

→ MAIN PROCESS

→ PNEUMATIC TRANSFER FOR WOOD WASTE

→ MECHANICAL CONVEYANCE FOR WOOD WASTE

Weyerhaeuser NR Company
Buckhannon, WV Plant

PARALLAM MANUFACTURING PROCESS

DRAWING NO: TFPFD2.DWG

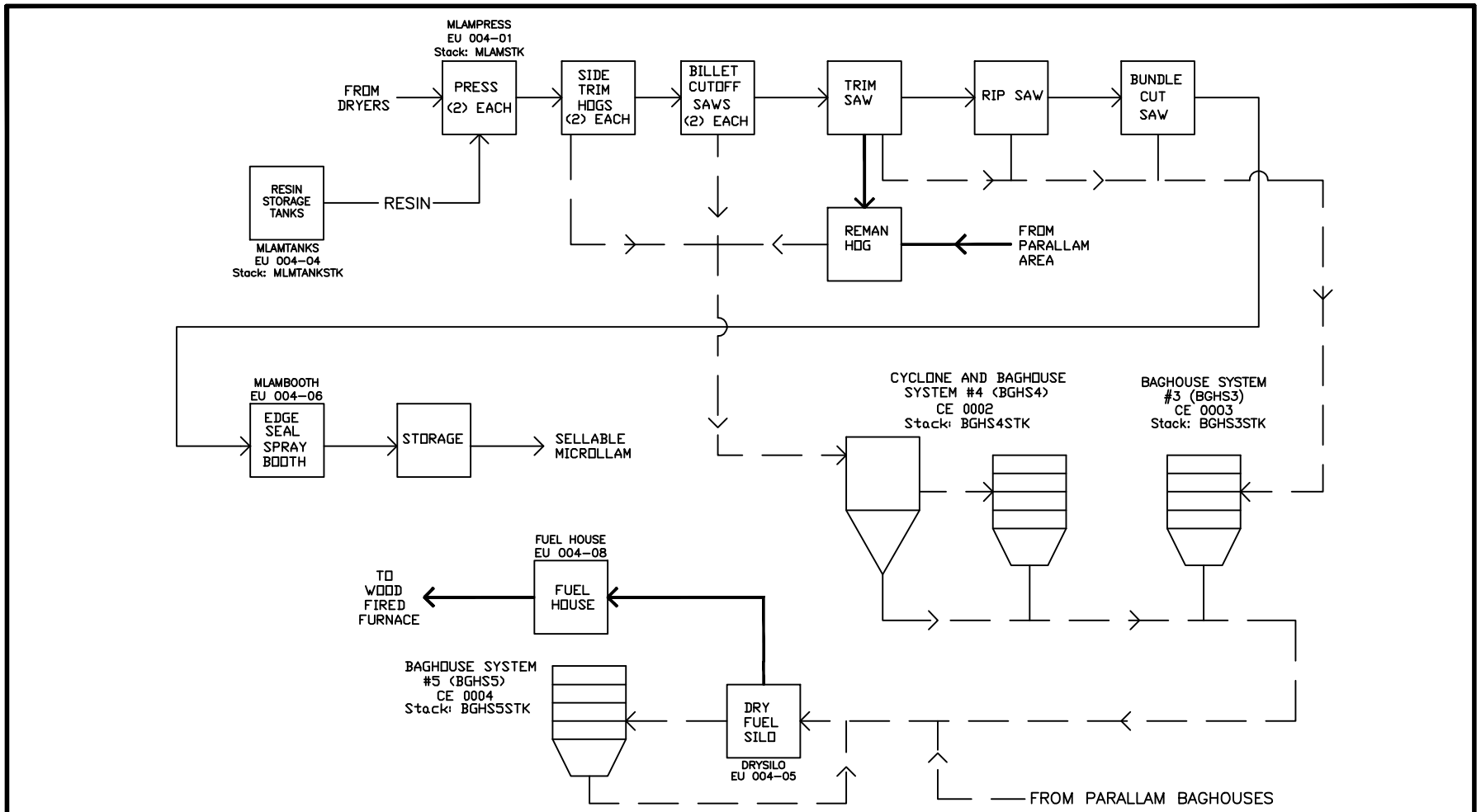

EU = EMISSION UNIT
CE = CONTROL EQUIPMENT

LEGEND

- MAIN PROCESS
- PNEUMATIC TRANSFER FOR WOOD WASTE
- MECHANICAL CONVEYANCE FOR WOOD WASTE

NOTES

EMISSION GROUP 004 CONSISTS OF ALL EQUIPMENT SHOWN ABOVE.

EMISSION UNIT 004-02 (MLAMREMAN1) CONSISTS OF THE FOLLOWING EQUIPMENT: SIDE TRIM HOGS, BILLET CUTOFF SAWS, AND THE REMAN HOG.

EMISSION UNIT 004-03 (MLAMREMAN2) CONSISTS OF THE FOLLOWING EQUIPMENT: TRIM SAW, RIP SAW, AND THE BUNDLE CUT SAW.

UNLESS LISTED IN THE NOTES SECTION, THE UNIT I.D. NUMBERS AND THE LOCAL I.D.'S ARE LISTED AT THE INDIVIDUAL UNITS.

Weyerhaeuser NR Company
Buckhannon, WV Plant

MICROLLAM MANUFACTURING PROCESS

DRAWING NO: TFPFD3.DWG

ATTACHMENT D

EQUIPMENT TABLE

Title V Operating Permit Renewal Application

Buckhannon Facility, Facility ID No. 097-00029
Buckhannon, West Virginia

Weyerhaeuser NR Company
41 TJM Drive
Buckhannon, West Virginia

March 2021

ATTACHMENT D - Title V Equipment Table

(includes all emission units at the facility except those designated as insignificant activities in Section 4, Item 19 of the General Forms)

Emission Point ID[1]	Control Device[1]	Emission Unit ID[1]	Emission Unit Description	Design Capacity	Year Installed/ Modified
WoodFurn	ESP	001-01	Wood-Fired Furnace	116 mmBtu/hr	1995
WoodFurn	MClone	001-01	Wood-Fired Furnace	116 mmBtu/hr	1995
StandByFurn1	N/A	001-02	Standby Furnace	40 mmBtu/hr	1995
VeneerDryr	N/A	003-01	Two (2) Veneer Dryers	42,000 lb/hr	1995
MlamPress	N/A	004-01	Two (2) Microlam Presses	456 ft3/hr	1995
MlamReman1	BGHS4	004-02	Microlam Reman Equipment #1	N/A	1995
MlamReman2	BGHS3	004-03	Microlam Reman Equipment #2	N/A	1995
MlamTanks	N/A	004-04	Microlam Resin Tanks	10,000 gal ea	1995
DrySilo	BGHS5	004-05	Dry Fuel Silo	26,239 ft3	1995
MlamBooth	N/A	004-06	Microlam Spray Booth	N/A	2003
Chip Bin	N/A	004-07	Storage of Green, Wet Wood Chips	13,600 ft3	1995
Fuel House	N/A	004-08	Storage of Wood Fuel	96,000 ft3	1995
PlamPress	N/A	005-01	Parallam Press	456 ft3/hr	1995
PlamLayup	BGHS1	005-03	Parallam Stranding Operation	N/A	1995
PlamReman1	BGHS2A	005-04	Parallam Reman Equipment #1	N/A	1995
PlamReman2	BGHS2B	005-05	Parallam Reman Equipment #2	N/A	1995
PlamTanks	N/A	005-06	Parallam Resin Tanks	15,000 gal ea	1995
E07	N/A	005-07	Parallam Sealer Bulk Tank	6,000 gal	2016
E08	N/A	005-08	Parallam Sealer Day Tank	350 gal	2016
E09	3C	005-09	Parallam Sealer Spray Booth	9.12 gal/hr	2016

[1]For 45CSR13 permitted sources, the numbering system used for the emission points, control devices, and emission units should be consistent with the numbering system used in the 45CSR13 permit. For grandfathered sources, the numbering system should be consistent with registrations or emissions inventory previously submitted to DAQ. For emission points, control devices, and emissions units which have not been previously labeled, use the following 45CSR13 numbering system: 1S, 2S, 3S,... or other appropriate description for emission units; 1C, 2C, 3C,... or other appropriate designation for control devices; 1E, 2E, 3E, ... or other appropriate designation for emission points.

ATTACHMENT E

EMISSION UNIT FORM(S)

Title V Operating Permit Renewal Application

Buckhannon Facility, Facility ID No. 097-00029
Buckhannon, West Virginia

Weyerhaeuser NR Company
41 TJM Drive
Buckhannon, West Virginia

March 2021

ATTACHMENT E - Emission Unit Form

Emission Unit Description

Emission unit ID number:	**Emission unit name:**	**List any control devices associated with this emission unit:**
001-01	WoodFurn	ESP MClone

Provide a description of the emission unit (type, method of operation, design parameters, etc.):
The wood-fired process heater is used to provide heat energy to the thermal oil system.
Wood waste (bio-mass) is used as the fuel for the wood-fired unit.
Average: 60,000 CFM - Flue gas flow
650 F - Flue gas exit temp.
35.4 ft/sec - Flue gas exis velocity

Manufacturer:	**Model number:**	**Serial number:**
Geka Thermal Systems (GTS)	GTS Job #0694	N/A
Construction date:	**Installation date:**	**Modification date(s):**
03/01/1995	03/01/1995	MM/DD/YYYY

Design Capacity (examples: furnaces - tons/hr, tanks - gallons):
116 MMBtu/hr - Heat Input
80 MMBtu/hr - Heat Output (Thermal oil)

Maximum Hourly Throughput:	**Maximum Annual Throughput:**	**Maximum Operating Schedule:**
Fuel - 25,550 lbs/hr	111,930 tons	8760 hr

Fuel Usage Data **(fill out all applicable fields)**

Does this emission unit combust fuel? _X_Yes ___ No	**If yes, is it?** **_X_ Indirect Fired** ___Direct Fired
Maximum design heat input and/or maximum horsepower rating: 116 MMBtu/hr - Heat Input 80 MMBtu/hr - Heat Output (Thermal oil system)	**Type and Btu/hr rating of burners:** N/A

List the primary fuel type(s) and if applicable, the secondary fuel type(s). For each fuel type listed, provide the maximum hourly and annual fuel usage for each.
Wood Fuel (Heat content ranges from 4000-6500 BTU/lb)
Maximum hourly fuel useage: 25,550 lbs/hr
Maximum annual fuel useage: 111,930 tons

Describe each fuel expected to be used during the term of the permit.

Fuel Type	Max. Sulfur Content	Max. Ash Content	BTU Value
Wood	N/A	N/A	4000 - 6500 BTU/lb

Page _____ of _____

Emissions Data		
Criteria Pollutants	Potential Emissions	
	PPH	TPY
Carbon Monoxide (CO)	41.0	179.58
Nitrogen Oxides (NO_X)	38.5	168.63
Lead (Pb)	0.34	1.49
Particulate Matter ($PM_{2.5}$)	0.48	2.1
Particulate Matter (PM_{10})	0.96	4.2
Total Particulate Matter (TSP)	3.0	13.14
Sulfur Dioxide (SO_2)	1.5	6.57
Volatile Organic Compounds (VOC)	4.5	19.71
Hazardous Air Pollutants	Potential Emissions	
	PPH	TPY
Regulated Pollutants other than Criteria and HAP	Potential Emissions	
	PPH	TPY

List the method(s) used to calculate the potential emissions (include dates of any stack tests conducted, versions of software used, source and dates of emission factors, etc.).

(VOC, PM, SO2, NOx) - Rates based on source test data with the addition of
correction factors to address the potential for future variations in the operation of the unit.
CO - Original Regulation 13 Permit Limit.
Lead - AP-42

Applicable Requirements

List all applicable requirements for this emission unit. For each applicable requirement, include the underlying rule/regulation citation and/or construction permit with the condition number. (*Note: Title V permit condition numbers alone are not the underlying applicable requirements*). If an emission limit is calculated based on the type of source and design capacity or if a standard is based on a design parameter, this information should also be included.

1) Requirement: 45CSR§2-3.1., 45CSR16, 40 C.F.R. §60.43b(f). Permit Condition: 4.1.1.
2) Requirement: 45CSR§2-5.1. Permit Condition: 4.1.3.
3) Requirement: 45CSR§2-9.1. Permit Condition: 4.1.4.
4) Requirement: 45CSR§2-9.2. Permit Condition: 4.1.5.
5) Requirement: 45CSR§10-3.4. and 3.4.a. Permit Condition: 4.1.6.
6) Requirement: 45CSR§10-9.1. Permit Condition: 4.1.7.
7) Requirement: 45CSR16, 40 C.F.R. § 60.43b (c). Permit Condition: 4.1.8.
8) Requirement: 45CSR16, 40 C.F.R. § 60.43b (g) Permit Condition: 4.1.9.
9) Requirement: 45CSR§§2-4.1 and 4.1.b., 45CSR§§10-3.3 and 3.3.f., 45CSR13, R13-1843, 4.1.9 & 4.1.12 Permit Condition: 4.1.10.
10) Requirement: 45CSR13, R13-1843, 4.1.7., Permit Condition: 4.1.12.
11) Requirement: 45CSR13, R13-1843, 4.1.8., Permit Condition: 4.1.13.
12) Requirement: 45CSR13, R13-1843, 4.1.14., Permit Condition: 4.1.14.
13) Requirement: 45CSR34, 40 C.F.R. §63.7500(a)(1), Table 2 Items 1 and 7 of 40 C.F.R. 63 Subpart DDDDD Permit Condition: 4.1.15.
14) Requirement: 45CSR34, 40 C.F.R. §63.7500(a)(1), Table 3 Items 1, 3, 4, 5 & 6 of 40 C.F.R. 63 Subpart DDDDD Permit Condition: 4.1.16.
15) Requirement: 45CSR34, 40 C.F.R. §63.7500(a)(2), Table 4 Item 4a of 40 C.F.R. 63 Subpart DDDDD Permit Condition: 4.1.17.
16) Requirement: 45CSR34, 40 C.F.R. §63.7555(a) Permit Condition: 4.1.18.
17) Requirement: 45CSR34, 40 C.F.R. §63.7500(f), 40 C.F.R. §63.7505(a) Permit Condition: 4.1.19.
18) Requirement: 45CSR34, 40 C.F.R. §63.7505(c) Permit Condition: 4.1.20.
19) Requirement: 45CSR34, 40 C.F.R. §63.7505(d) Permit Condition: 4.1.21.
20) Requirement: 45CSR34, 40 C.F.R. §63.7505(e) Permit Condition: 4.1.22.
21) Requirement: 45CSR34, 40 C.F.R. §63.7525(a) Permit Condition: 4.1.23.
22) Requirement: 45CSR34, 40 C.F.R. §63.7525(a)(7) Permit Condition: 4.1.24.
23) Requirement: 45CSR34, 40 C.F.R. §63.7525(c) Permit Condition: 4.1.25.
24) Requirement: 45CSR34, 40 C.F.R. §63.7540(a)(1), (2), (4), (6) Permit Condition: 4.1.26.
25) Requirement: 45CSR34, 40 C.F.R. §63.7515(d) Permit Condition: 4.1.27.
26) Requirement: 45CSR34, 40 C.F.R. §63.7540(a)(10) Permit Condition: 4.1.28.
27) Requirement: 45CSR34, 40 C.F.R. §63.7540(a)(12) Permit Condition: 4.1.29.
28) Requirement: 45CSR34, 40 C.F.R. §63.7540(a)(13) Permit Condition: 4.1.30.
29) Requirement: 45CSR16, 40 C.F.R. § 60.46b (b) Permit Condition: 4.3.6.

_X_ Permit Shield

For all applicable requirements listed above, provide monitoring/testing/recordkeeping/reporting which shall be used to demonstrate compliance. If the method is based on a permit or rule, include the condition number or citation. (Note: Each requirement listed above must have an associated method of demonstrating compliance. If there is not already a required method in place, then a method must be proposed.)

1) Monitoring (COM)/Recordkeeping - Permit Condition: 4.1.2., 4.2.1., 4.2.2., 4.2.3., 4.3.1., 4.4.4.
2) Monitoring - Permit Conditon: 4.1.3.
3) Recordkeeping - Permit Condition: 4.4.1., 4.4.2.
4) Monitoring/Recordkeeping - Permit Condition: 4.2.1., 4.4.1., 4.4.2.
5) Recordkeeping - Permit Condition: 4.4.1.
6) Notification - Permit Condition: 4.1.13.
7) Testing/Recordkeeping - Permit Condition: 4.3.1., 4.3.2., 4.4.3.

8) Recordkeeping - Permit Condition: 4.4.1., 4.4.2.
9) Monitoring/Recordkeeping - Permit Condition: 4.3.1., 4.3.2., 4.3.6., 4.4.1.
10) Recordkeeping - Permit Conditions: 4.4.1., 4.4.2., 4.4.7.
11) Recordkeeping - Permit Condition: 4.4.7.
12) Recordkeeping - Permit Condition: 4.4.7.
13) Testing/Recordkeeping/Reporting – Permit Condition: 4.1.15, 4.3.7., 4.4.8., 4.4.10., 4.4.11., 4.5.5. through 4.5.13
14) Monitoring/Recordkeeping – Permit Condition: 4.1.16., 4.2.5., 4.4.8., 4.4.9., 4.4.12., 4.4.13.
15) Monitoring/Recordkeeping – Permit Condition: 4.2.5., 4.4.8., 4.4.10.
16) Monitoring/Recordkeeping/Reporting – Permit Condition: 4.2.5., 4.4.9., 4.4.10, 4.4.11., 4.4.12., 4.4.13., 4.5.5., 4.5.11., 4.5.12.
17) Monitoring/Recordkeeping/Reporting – Permit Condition: 4.2.5., 4.4.9., 4.4.10, 4.4.11., 4.4.12., 4.4.13., 4.5.5., 4.5.11., 4.5.12.
18) Monitoring/Recordkeeping/Reporting – Permit Condition: 4.2.5., 4.4.8., through 4.4.13., 4.5.5. through 4.5.13.
19) Monitoring/Recordkeeping/Reporting – Permit Condition: 4.2.5., 4.4.8., through 4.4.13., 4.5.5. through 4.5.13.
20) Monitoring/Recordkeeping/Reporting – Permit Condition: 4.2.5., 4.4.8., through 4.4.13., 4.5.5. through 4.5.13.
21) Monitoring/Recordkeeping/Reporting – Permit Condition: 4.2.5., 4.4.8., through 4.4.13., 4.5.5. through 4.5.13.
22) Monitoring/Recordkeeping/Reporting – Permit Condition: 4.2.5., 4.4.8., through 4.4.13., 4.5.5. through 4.5.13.
23) Monitoring/Recordkeeping/Reporting – Permit Condition: 4.2.5., 4.4.8., through 4.4.13., 4.5.5. through 4.5.13.
24) Monitoring/Testing/Recordkeeping/Reporting – Permit Condition: 4.2.5., 4.3.7., 4.4.8., through 4.4.13., 4.5.5. through 4.5.13.
25) Monitoring/Testing/Recordkeeping/Reporting – Permit Condition: 4.2.5., 4.3.7., 4.4.8., through 4.4.13., 4.5.5. through 4.5.13.
26) Monitoring/Testing/Recordkeeping/Reporting – Permit Condition: 4.2.5., 4.3.7., 4.4.8., through 4.4.13., 4.5.5. through 4.5.13.
27) Monitoring/Testing/Recordkeeping/Reporting – Permit Condition: 4.2.5., 4.3.7., 4.4.8., through 4.4.13., 4.5.5. through 4.5.13.
28) Testing – Permit Condition: 4.3.7.
29) Testing/Recordkeeping - Permit Condition: 4.3.1., 4.3.2., 4.3.6., 4.4.1.

Are you in compliance with all applicable requirements for this emission unit? _X_Yes ___No

If no, complete the **Schedule of Compliance Form** as **ATTACHMENT F**.

ATTACHMENT E - Emission Unit Form

Emission Unit Description

Emission unit ID number:	**Emission unit name:**	**List any control devices associated with this emission unit:**
001-02	StandByFurn1	

Provide a description of the emission unit (type, method of operation, design parameters, etc.):
The stand by furnace is a back-up unit for the heat energy system with a maximum design heat input of 40 MMBtu/hr.
The purpose of the stand by furnace is to supplement the wood-fired furnace in maintaining the proper heat balance to the thermal oil system or for periods when the wood-fired furnace is down. A like kind replacement burner was installed on this furnace and started operation March 27, 2015.
The new equipment is a Power Flame Burner, Model # CMR 11A-GO-30C, Serial # 031245042.

Manufacturer:	**Model number:**	**Serial number:**
Gordon Piatt Energy Group	DH-V-100/50	N/A
Construction date:	**Installation date:**	**Modification date(s):**
05/01/1995	05/01/1995	MM/DD/YYYY

Design Capacity (examples: furnaces - tons/hr, tanks - gallons):
40 MMBtu/hr

Maximum Hourly Throughput:	**Maximum Annual Throughput:**	**Maximum Operating Schedule:**
3,720 lbs/hr	16,294 tons	8760 hr

Fuel Usage Data **(fill out all applicable fields)**

Does this emission unit combust fuel? _X_Yes ___ No	**If yes, is it?** r Indirect Fired __Direct Fired
Maximum design heat input and/or maximum horsepower rating: Maximum heat input: 40 MMBtu/hr Blower Motor: 60 hp	**Type and Btu/hr rating of burners:** Power Flame Burner Model CMR 11A-GO-30C 40 MMBtu/hr

List the primary fuel type(s) and if applicable, the secondary fuel type(s). For each fuel type listed, provide the maximum hourly and annual fuel usage for each.
Natural Gas: 3,720 lbs/hr using 93 lbs/MMBtu
Propane: 3,000 lbs/hr using 75 lbs/MMBtu

Describe each fuel expected to be used during the term of the permit.

Fuel Type	Max. Sulfur Content	Max. Ash Content	BTU Value
Natural Gas	0.001	0	1000 BTU/cuft
Propane	0.001	0	2500 BTU/cuft

Emissions Data		
Criteria Pollutants	Potential Emissions	
	PPH	TPY
Carbon Monoxide (CO)	1.39	6.09
Nitrogen Oxides (NO_X)	9.0	39.42
Lead (Pb)		
Particulate Matter ($PM_{2.5}$)	0.16	0.7
Particulate Matter (PM_{10})	0.32	1.4
Total Particulate Matter (TSP)	1.0	4.38
Sulfur Dioxide (SO_2)	0.5	2.19
Volatile Organic Compounds (VOC)	1.86	8.15
Hazardous Air Pollutants	Potential Emissions	
	PPH	TPY
Regulated Pollutants other than Criteria and HAP	Potential Emissions	
	PPH	TPY

List the method(s) used to calculate the potential emissions (include dates of any stack tests conducted, versions of software used, source and dates of emission factors, etc.).

(PM, SO2, NOx) - Rates based on source test data with the addition of correction factors to address the potential for future variations in the operation of the unit.
(VOC, CO) - Original Regulation 13 Permit Limit.

Applicable Requirements

List all applicable requirements for this emission unit. For each applicable requirement, include the underlying rule/regulation citation and/or construction permit with the condition number. (*Note: Title V permit condition numbers alone are not the underlying applicable requirements*). If an emission limit is calculated based on the type of source and design capacity or if a standard is based on a design parameter, this information should also be included.

1) Requirement: 45CSR§2-3.1., 45CSR16, 40 C.F.R. §60.43b(f). Permit Condition: 4.1.1.
2) Requirement: 45CSR§2-9.1. Permit Condition: 4.1.4.
3) Requirement: 45CSR§2-9.2. Permit Condition: 4.1.5.
4) Requirement: 45CSR§10-3.4. and 3.4.a. Permit Condition: 4.1.6.
5) Requirement: 45CSR§10-9.1. Permit Condition: 4.1.7.
6) Requirement: 45CSR§§2-4.1 and 4.1.b., 45CSR§§10-3.3 and 3.3.f., 45CSR13, R13-1843, 4.1.9 & 4.1.12 Permit Condition: 4.1.10.
7) Requirement: 45CSR§30-5.1.c. Permit Condition: 4.1.11.
8) Requirement: 45CSR34, 40 C.F.R. §63.7500(a)(1), Table 3 Items 1, 3, 4, 5 & 6 of 40 C.F.R. 63 Subpart DDDDD Permit Condition: 4.1.16.
9) Requirement: 45CSR34, 40 C.F.R. §63.7555(a) Permit Condition: 4.1.18.
10) Requirement: 45CSR34, 40 C.F.R. §63.7500(f), 40 C.F.R. §63.7505(a) Permit Condition: 4.1.19.
11) Requirement: 45CSR34, 40 C.F.R. §63.7505(c) Permit Condition: 4.1.20.
12) Requirement: 45CSR34, 40 C.F.R. §63.7515(d) Permit Condition: 4.1.27.
13) Requirement: 45CSR34, 40 C.F.R. §63.7540(a)(10) Permit Condition: 4.1.28.
14) Requirement: 45CSR34, 40 C.F.R. §63.7540(a)(12) Permit Condition: 4.1.29.
15) Requirement: 45CSR34, 40 C.F.R. §63.7540(a)(13) Permit Condition: 4.1.30.
16) Requirement: 45CSR16, 40 C.F.R. §60.48c(g)(2) Permit Condition: 4.4.5.
17) Requirement: 45CSR16, 40 C.F.R. §60.48c(i), 45CSR16, 40 C.F.R. §60.49b(o) Permit Condition: 4.4.6.
18) Requirement: 45CSR16, 40 C.F.R. §60.48c(j) Permit Condition: 4.5.4.

_X_ Permit Shield

For all applicable requirements listed above, provide monitoring/testing/recordkeeping/reporting which shall be used to demonstrate compliance. If the method is based on a permit or rule, include the condition number or citation. (Note: Each requirement listed above must have an associated method of demonstrating compliance. If there is not already a required method in place, then a method must be proposed.)

1) Monitoring (COM)/Recordkeeping - Permit Condition: 4.1.2., 4.2.1., 4.2.2., 4.2.3., 4.3.1., 4.4.4.
2) Recordkeeping - Permit Condition: 4.4.1., 4.4.2.
3) Monitoring/Recordkeeping - Permit Condition: 4.2.1., 4.4.1., 4.4.2.
4) Recordkeeping - Permit Condition: 4.4.1.
5) Notification - Permit Condition: 4.1.13.
6) Monitoring/Recordkeeping - Permit Condition: 4.3.1., 4.3.2., 4.3.6., 4.4.1.
7) Monitoring/Recordkeeping - Permit Condition: 4.4.1., 4.4.2., 4.4.5.
8) Monitoring/Recordkeeping – Permit Condition: 4.1.16., 4.2.5., 4.4.8., 4.4.9., 4.4.12., 4.4.13.
9) Monitoring/Recordkeeping/Reporting – Permit Condition: 4.2.5., 4.4.9., 4.4.10, 4.4.11., 4.4.12., 4.4.13., 4.5.5., 4.5.11., 4.5.12.
10) Monitoring/Recordkeeping/Reporting – Permit Condition: 4.2.5., 4.4.9., 4.4.10, 4.4.11., 4.4.12., 4.4.13., 4.5.5., 4.5.11., 4.5.12.
11) Monitoring/Recordkeeping/Reporting – Permit Condition: 4.2.5., 4.4.8., through 4.4.13., 4.5.5. through 4.5.13.
22) Monitoring/Testing/Recordkeeping/Reporting – Permit Condition: 4.2.5., 4.3.7., 4.4.8., through 4.4.13., 4.5.5. through 4.5.13.
13) Monitoring/Testing/Recordkeeping/Reporting – Permit Condition: 4.2.5., 4.3.7., 4.4.8., through 4.4.13., 4.5.5. through 4.5.13.
14) Monitoring/Testing/Recordkeeping/Reporting – Permit Condition: 4.2.5., 4.3.7., 4.4.8., through 4.4.13., 4.5.5. through 4.5.13.
15) Testing – Permit Condition: 4.3.7.

16) Recordkeeping – Permit Condition: 4.4.5. 17) Recordkeeping – Permit Condition: 4.4.6. 18) Reporting – Permit Condition: 4.5.4.
Are you in compliance with all applicable requirements for this emission unit? _X_Yes ___No If no, complete the **Schedule of Compliance Form** as **ATTACHMENT F**.

ATTACHMENT E - Emission Unit Form

Emission Unit Description

Emission unit ID number:	**Emission unit name:**	**List any control devices associated with this emission unit:**
003-01	VeneerDryr	

Provide a description of the emission unit (type, method of operation, design parameters, etc.):
The veneer dryers bring the moisture content of the green veneer down to levels acceptable for the production processes for the Microllam and Parallam presses.

The dryers are heated by air to oil heat exchangers, where air is heated by passing it through multiple heat exchangers that are heated by the thermal oil system.

Manufacturer:	**Model number:**	**Serial number:**
Babcock - BSH	N/A	N/A

Construction date:	**Installation date:**	**Modification date(s):**
05/01/1995	05/01/1995	MM/DD/YYYY

Design Capacity (examples: furnaces - tons/hr, tanks - gallons): 42,000 lbs/hr (Dry Veneer Output)
Normal Production Rate: 1,000 cuft/hr
Maximum Production Rate: 1,400 cuft/hr

Maximum Hourly Throughput:	**Maximum Annual Throughput:**	**Maximum Operating Schedule:**
42,000 lbs/hr (Dry Veneer Output)	183,960 tons (Dry Veneer)	8760 hr

Fuel Usage Data **(fill out all applicable fields)**

Does this emission unit combust fuel? ___Yes _X_ **No**	**If yes, is it?** ___ Indirect Fired ___Direct Fired
Maximum design heat input and/or maximum horsepower rating:	**Type and Btu/hr rating of burners:**

List the primary fuel type(s) and if applicable, the secondary fuel type(s). For each fuel type listed, provide the maximum hourly and annual fuel usage for each.

Describe each fuel expected to be used during the term of the permit.

Fuel Type	Max. Sulfur Content	Max. Ash Content	BTU Value

Page _____ of _____

Emissions Data		
Criteria Pollutants	Potential Emissions	
	PPH	TPY
Carbon Monoxide (CO)		
Nitrogen Oxides (NO_X)		
Lead (Pb)		
Particulate Matter ($PM_{2.5}$)	1.205	5.28
Particulate Matter (PM_{10})	4.8	21.01
Total Particulate Matter (TSP)	24.6	107.75
Sulfur Dioxide (SO_2)		
Volatile Organic Compounds (VOC)	18	78.84
Hazardous Air Pollutants	Potential Emissions	
	PPH	TPY
Regulated Pollutants other than Criteria and HAP	Potential Emissions	
	PPH	TPY

List the method(s) used to calculate the potential emissions (include dates of any stack tests conducted, versions of software used, source and dates of emission factors, etc.).

(PM, VOC) - Rate is established by analyzing the source test data from the December 1995 & August 2005 compliance tests and adding in correction factors to address potential variations in operation of the unit and potential variations in test methodologies.

Applicable Requirements

List all applicable requirements for this emission unit. For each applicable requirement, include the underlying rule/regulation citation and/or construction permit with the condition number. (*Note: Title V permit condition numbers alone are not the underlying applicable requirements*). If an emission limit is calculated based on the type of source and design capacity or if a standard is based on a design parameter, this information should also be included.

1) Requirement: 45CSR§7-3.1. Permit Condition: 5.1.1.
2) Requirement: 45CSR§7-3.2. Permit Condition: 5.1.2.
3) Requirement: 45CSR§7-4.1., 45CSR13, R13-1843, 4.1.10. Permit Condition: 5.1.3.
4) Requirement: 45CSR§7-4.12. Permit Condition: 5.1.4.
5) Requirement: 45CSR§7-9.1. Permit Condition: 5.1.5.
6) Requirement: 45CSR§7-10.3. Permit Condition: 5.1.6.
7) Requirement: 45CSR13, R13-1843, 4.1.1. Permit Condition: 5.1.7.
8) Requirement: 45CSR13, R13-1843, 4.1.5. Permit Condition: 5.1.8.
9) Requirement: 45CSR13, R13-1843, 4.1.6. Permit Condition: 5.1.9.
10) Requirement: 45CSR§30-5.1.c Permit Condition: 5.2.1.
11) Requirement: 45CSR34, 40. C.F.R. § 63.2241 and 40 C.F.R. Part 63 Subpart DDDD, Table 3 Permit Condition: 7.1.1.
12) Requirement: 45CSR34, 40. C.F.R. § 63.2250(a) Permit Condition: 7.1.2.

_X_ Permit Shield

For all applicable requirements listed above, provide monitoring/testing/recordkeeping/reporting which shall be used to demonstrate compliance. If the method is based on a permit or rule, include the condition number or citation. (Note: Each requirement listed above must have an associated method of demonstrating compliance. If there is not already a required method in place, then a method must be proposed.)

1) Monitoring/Recordkeeping - Permit Condition: 5.2.1.
2) Monitoring/Recordkeeping - Permit Condition: 5.2.1.
3) Testing/Recordkeeping - Permit Condition: 5.3.1., 5.4.1.
4) Testing/Recordkeeping - Permit Condition: 5.3.1., 5.4.1.
5) Reporting - Permit Condition: 5.1.5.
6) Recordkeeping - Permit Condition: 5.1.6.
7) Recordkeeping - Permit Condition: 5.4.1.
8) Recordkeeping - Permit Condition: 5.4.1.
9) Recordkeeping - Permit Condition: 5.4.1.
10) Monitoring/Recordkeeping - Permit Condition: 5.2.1.
11) Recordkeeping/Reporting - Permit Condition: 7.4.1. through 7.4.3., 7.5.1. through 7.5.6.
12) Recordkeeping/Reporting - Permit Condition: 7.4.1. through 7.4.3., 7.5.1. through 7.5.6.

Are you in compliance with all applicable requirements for this emission unit? _X_Yes ___No

If no, complete the **Schedule of Compliance Form** as **ATTACHMENT F**.

ATTACHMENT E - Emission Unit Form

Emission Unit Description

Emission unit ID number:	**Emission unit name:**	**List any control devices associated with this emission unit:**
004-01	MlamPress	

Provide a description of the emission unit (type, method of operation, design parameters, etc.):
Two Microllam presses that perform the pressing operations to produce Microllam (LVL) billets.

Manufacturer:	**Model number:**	**Serial number:**
Taihei Machinery Works	Press #11 & #12	N/A
Construction date:	**Installation date:**	**Modification date(s):**
05/01/1995	05/01/1995	MM/DD/YYYY

Design Capacity (examples: furnaces - tons/hr, tanks - gallons):
456 cuft/hr

Maximum Hourly Throughput:	**Maximum Annual Throughput:**	**Maximum Operating Schedule:**
574 cuft/hr	5,000,000 cuft	8760 hr

Fuel Usage Data **(fill out all applicable fields)**

Does this emission unit combust fuel? ___Yes **_X_ No**	**If yes, is it?** ___ Indirect Fired ___Direct Fired
Maximum design heat input and/or maximum horsepower rating:	**Type and Btu/hr rating of burners:**

List the primary fuel type(s) and if applicable, the secondary fuel type(s). For each fuel type listed, provide the maximum hourly and annual fuel usage for each.

Describe each fuel expected to be used during the term of the permit.

Fuel Type	Max. Sulfur Content	Max. Ash Content	BTU Value

Page _____ of _____

Emissions Data		
Criteria Pollutants	Potential Emissions	
	PPH	TPY
Carbon Monoxide (CO)		
Nitrogen Oxides (NO_X)		
Lead (Pb)		
Particulate Matter ($PM_{2.5}$)		
Particulate Matter (PM_{10})		
Total Particulate Matter (TSP)		
Sulfur Dioxide (SO_2)		
Volatile Organic Compounds (VOC)	16.15	70.73
Hazardous Air Pollutants	Potential Emissions	
	PPH	TPY
Formaldehyde	0.40	1.75
Phenol	0.034	0.15
Methanol	5.04	22.12
Regulated Pollutants other than Criteria and HAP	Potential Emissions	
	PPH	TPY

List the method(s) used to calculate the potential emissions (include dates of any stack tests conducted, versions of software used, source and dates of emission factors, etc.).

Borden's Sealed Caul Plate Test Data (1995)

Applicable Requirements
List all applicable requirements for this emission unit. For each applicable requirement, include the underlying rule/regulation citation and/or construction permit with the condition number. (*Note: Title V permit condition numbers alone are not the underlying applicable requirements*). If an emission limit is calculated based on the type of source and design capacity or if a standard is based on a design parameter, this information should also be included. 1) Requirement: 45CSR§7-3.1. Permit Condition: 6.1.1. 2) Requirement: 45CSR§7-3.2. Permit Condition: 6.1.2. 3) Requirement: 45CSR§7-4.12. Permit Condition: 6.1.5. 4) Requirement: 45CSR§7-9.1. Permit Condition: 6.1.6. 5) Requirement: 45CSR§7-10.3. Permit Condition: 6.1.7. 6) Requirement: 45CSR13, R13-1843, 4.1.3. Permit Condition: 6.1.9. 7) Requirement: 45CSR13, R13-1843, 4.1.2. Permit Condition: 6.1.10. 8) Requirement: 45CSR34, 40. C.F.R. § 63.2241 and 40 C.F.R. Part 63 Subpart DDDD, Table 3 Permit Condition: 7.1.1. 9) Requirement: 45CSR34, 40. C.F.R. § 63.2250(a) Permit Condition: 7.1.2.
_X_ Permit Shield
For all applicable requirements listed above, provide monitoring/testing/recordkeeping/reporting which shall be used to demonstrate compliance. If the method is based on a permit or rule, include the condition number or citation. (Note: Each requirement listed above must have an associated method of demonstrating compliance. If there is not already a required method in place, then a method must be proposed.) 1) Monitoring/Recordkeeping - Permit Condition: 6.2.3., 6.4.1. 2) Monitoring/Recordkeeping - Permit Condition: 6.2.3., 6.4.1. 3) Standard - Permit Condition: 6.1.5. 4) Reporting - Permit Condition: 6.1.6. 5) Recordkeeping - Permit Condition: 6.1.7. 6) Recordkeeping - Permit Condition: 6.4.1. 7) Recordkeeping - Permit Condition: 6.4.1. 8) Recordkeeping/Reporting - Permit Condition: 7.4.1. through 7.4.3., 7.5.1. through 7.5.6. 9) Recordkeeping/Reporting - Permit Condition: 7.4.1. through 7.4.3., 7.5.1. through 7.5.6.
Are you in compliance with all applicable requirements for this emission unit? _X_Yes ___No If no, complete the **Schedule of Compliance Form** as **ATTACHMENT F**.

ATTACHMENT E - Emission Unit Form

Emission Unit Description

Emission unit ID number:	**Emission unit name:**	**List any control devices associated with this emission unit:**
004-02	MlamReman1	BGHS4

Provide a description of the emission unit (type, method of operation, design parameters, etc.):
MlamReman1 - Side trim hogs, billet cut off saws, and reman hog
Microllam reman is used for finishing of the Microllam (LVL) product for shipping.

Manufacturer:	**Model number:**	**Serial number:**
USNR	N/A	N/A
Construction date:	**Installation date:**	**Modification date(s):**
05/01/1995	05/01/1995	MM/DD/YYYY

Design Capacity (examples: furnaces - tons/hr, tanks - gallons):
N/A

Maximum Hourly Throughput:	**Maximum Annual Throughput:**	**Maximum Operating Schedule:**
N/A	N/A	8760 hr

Fuel Usage Data **(fill out all applicable fields)**

Does this emission unit combust fuel? ___Yes _X_ **No**	**If yes, is it?** ___ Indirect Fired ___Direct Fired
Maximum design heat input and/or maximum horsepower rating:	**Type and Btu/hr rating of burners:**

List the primary fuel type(s) and if applicable, the secondary fuel type(s). For each fuel type listed, provide the maximum hourly and annual fuel usage for each.

Describe each fuel expected to be used during the term of the permit.

Fuel Type	Max. Sulfur Content	Max. Ash Content	BTU Value

Page _____ of _____

Emissions Data		
Criteria Pollutants	Potential Emissions	
	PPH	TPY
Carbon Monoxide (CO)		
Nitrogen Oxides (NO_X)		
Lead (Pb)		
Particulate Matter ($PM_{2.5}$)	0.084	0.367
Particulate Matter (PM_{10})	0.333	1.46
Total Particulate Matter (TSP)	1.71	7.49
Sulfur Dioxide (SO_2)		
Volatile Organic Compounds (VOC)		
Hazardous Air Pollutants	Potential Emissions	
	PPH	TPY
Regulated Pollutants other than Criteria and HAP	Potential Emissions	
	PPH	TPY

List the method(s) used to calculate the potential emissions (include dates of any stack tests conducted, versions of software used, source and dates of emission factors, etc.).

A factor of 0.005 gr/dscf was applied to the manufactures designed flow rate for BGHS4 to calculate PM emissions. (Emission factor derived from source testing performed at the Deerwood plant)

Applicable Requirements
List all applicable requirements for this emission unit. For each applicable requirement, include the underlying rule/regulation citation and/or construction permit with the condition number. (*Note: Title V permit condition numbers alone are not the underlying applicable requirements*). If an emission limit is calculated based on the type of source and design capacity or if a standard is based on a design parameter, this information should also be included. 1) Requirement: 45CSR§7-3.1. Permit Condition: 6.1.1. 2) Requirement: 45CSR§7-3.2. Permit Condition: 6.1.2. 3) Requirement: 45CSR§7-4.1., 45CSR13, R13-1843, 4.1.11. & 4.1.13. Permit Condition: 6.1.4. 4) Requirement: 45CSR§7-4.12. Permit Condition: 6.1.5. 5) Requirement: 45CSR§7-9.1. Permit Condition: 6.1.6. 6) Requirement: 45CSR§7-10.3. Permit Condition: 6.1.7. 7) Requirement: 45CSR34, 40. C.F.R. § 63.2241 and 40 C.F.R. Part 63 Subpart DDDD, Table 3 Permit Condition: 7.1.1. 8) Requirement: 45CSR34, 40. C.F.R. § 63.2250(a) Permit Condition: 7.1.2.
_X_ Permit Shield
For all applicable requirements listed above, provide monitoring/testing/recordkeeping/reporting which shall be used to demonstrate compliance. If the method is based on a permit or rule, include the condition number or citation. (Note: Each requirement listed above must have an associated method of demonstrating compliance. If there is not already a required method in place, then a method must be proposed.) 1) Monitoring/Recordkeeping - Permit Condition: 6.2.3., 6.4.1. 2) Monitoring/Recordkeeping - Permit Condition: 6.2.3., 6.4.1. 3) Monitoring/Recordkeeping - Permit Condition: 6.1.14., 6.2.1., 6.2.3. 4) Standard - Permit Condition: 6.1.5. 5) Reporting - Permit Condition: 6.1.6. 6) Recordkeeping - Permit Condition: 6.1.7. 7) Recordkeeping/Reporting - Permit Condition: 7.4.1. through 7.4.3., 7.5.1. through 7.5.6. 8) Recordkeeping/Reporting - Permit Condition: 7.4.1. through 7.4.3., 7.5.1. through 7.5.6.
Are you in compliance with all applicable requirements for this emission unit? _X_Yes ___No If no, complete the **Schedule of Compliance Form** as **ATTACHMENT F**.

ATTACHMENT E - Emission Unit Form

Emission Unit Description

Emission unit ID number:	**Emission unit name:**	**List any control devices associated with this emission unit:**
004-03	MlamReman2	BGHS3

Provide a description of the emission unit (type, method of operation, design parameters, etc.):
MlamReman2 - Rip saw, bundle cut saws and trim saws
Microllam reman is used for finishing of the Microllam (LVL) product for shipping.

Manufacturer:	**Model number:**	**Serial number:**
USNR	N/A	N/A
Construction date:	**Installation date:**	**Modification date(s):**
05/01/1995	05/01/1995	MM/DD/YYYY

Design Capacity (examples: furnaces - tons/hr, tanks - gallons):
N/A

Maximum Hourly Throughput:	**Maximum Annual Throughput:**	**Maximum Operating Schedule:**
N/A	N/A	8760 hr

Fuel Usage Data **(fill out all applicable fields)**

Does this emission unit combust fuel? ___Yes _X_ **No**	**If yes, is it?** ___ Indirect Fired ___Direct Fired
Maximum design heat input and/or maximum horsepower rating:	**Type and Btu/hr rating of burners:**

List the primary fuel type(s) and if applicable, the secondary fuel type(s). For each fuel type listed, provide the maximum hourly and annual fuel usage for each.

Describe each fuel expected to be used during the term of the permit.

Fuel Type	Max. Sulfur Content	Max. Ash Content	BTU Value

Page _____ of _____

Emissions Data		
Criteria Pollutants	Potential Emissions	
	PPH	TPY
Carbon Monoxide (CO)		
Nitrogen Oxides (NO_X)		
Lead (Pb)		
Particulate Matter ($PM_{2.5}$)	0.056	0.245
Particulate Matter (PM_{10})	0.222	0.973
Total Particulate Matter (TSP)	1.14	4.99
Sulfur Dioxide (SO_2)		
Volatile Organic Compounds (VOC)		
Hazardous Air Pollutants	Potential Emissions	
	PPH	TPY
Regulated Pollutants other than Criteria and HAP	Potential Emissions	
	PPH	TPY

List the method(s) used to calculate the potential emissions (include dates of any stack tests conducted, versions of software used, source and dates of emission factors, etc.).

A factor of 0.005 gr/dscf was applied to the manufactures designed flow rate for BGHS3 to calculate PM emissions. (Emission factor derived from source testing performed at the Deerwood plant)

Applicable Requirements
List all applicable requirements for this emission unit. For each applicable requirement, include the underlying rule/regulation citation and/or construction permit with the condition number. (*Note: Title V permit condition numbers alone are not the underlying applicable requirements*). If an emission limit is calculated based on the type of source and design capacity or if a standard is based on a design parameter, this information should also be included. 1) Requirement: 45CSR§7-3.1. Permit Condition: 6.1.1. 2) Requirement: 45CSR§7-3.2. Permit Condition: 6.1.2. 3) Requirement: 45CSR§7-4.1., 45CSR13, R13-1843, 4.1.11. & 4.1.13. Permit Condition: 6.1.4. 4) Requirement: 45CSR§7-4.12. Permit Condition: 6.1.5. 5) Requirement: 45CSR§7-9.1. Permit Condition: 6.1.6. 6) Requirement: 45CSR§7-10.3. Permit Condition: 6.1.7. 7) Requirement: 45CSR34, 40. C.F.R. § 63.2241 and 40 C.F.R. Part 63 Subpart DDDD, Table 3 Permit Condition: 7.1.1. 8) Requirement: 45CSR34, 40. C.F.R. § 63.2250(a) Permit Condition: 7.1.2.
_X_ Permit Shield
For all applicable requirements listed above, provide monitoring/testing/recordkeeping/reporting which shall be used to demonstrate compliance. If the method is based on a permit or rule, include the condition number or citation. (Note: Each requirement listed above must have an associated method of demonstrating compliance. If there is not already a required method in place, then a method must be proposed.) 1) Monitoring/Recordkeeping - Permit Condition: 6.2.3., 6.4.1. 2) Monitoring/Recordkeeping - Permit Condition: 6.2.3., 6.4.1. 3) Monitoring/Recordkeeping - Permit Condition: 6.1.14., 6.2.1., 6.2.3. 4) Standard - Permit Condition: 6.1.5. 5) Reporting - Permit Condition: 6.1.6. 6) Recordkeeping - Permit Condition: 6.1.7. 7) Recordkeeping/Reporting - Permit Condition: 7.4.1. through 7.4.3., 7.5.1. through 7.5.6. 8) Recordkeeping/Reporting - Permit Condition: 7.4.1. through 7.4.3., 7.5.1. through 7.5.6.
Are you in compliance with all applicable requirements for this emission unit? _X_Yes ___No If no, complete the **Schedule of Compliance Form** as **ATTACHMENT F**.

ATTACHMENT E - Emission Unit Form

Emission Unit Description

Emission unit ID number:	**Emission unit name:**	**List any control devices associated with this emission unit:**
004-04	MlamTanks	

Provide a description of the emission unit (type, method of operation, design parameters, etc.):
Two (2) identical tanks that store resin.

Manufacturer:	**Model number:**	**Serial number:**
Ralph Jackson	N/A	N/A
Construction date:	**Installation date:**	**Modification date(s):**
05/01/1995	05/01/1995	MM/DD/YYYY

Design Capacity (examples: furnaces - tons/hr, tanks - gallons): 10,000 gallons (each)

Maximum Hourly Throughput:	**Maximum Annual Throughput:**	**Maximum Operating Schedule:**
2,018.3 lb/hr	8,840 tons	8760 hr

Fuel Usage Data **(fill out all applicable fields)**

Does this emission unit combust fuel? ___Yes **_X_ No**	**If yes, is it?** ___ Indirect Fired ___Direct Fired
Maximum design heat input and/or maximum horsepower rating:	**Type and Btu/hr rating of burners:**

List the primary fuel type(s) and if applicable, the secondary fuel type(s). For each fuel type listed, provide the maximum hourly and annual fuel usage for each.

Describe each fuel expected to be used during the term of the permit.

Fuel Type	Max. Sulfur Content	Max. Ash Content	BTU Value

Emissions Data		
Criteria Pollutants	Potential Emissions	
	PPH	TPY
Carbon Monoxide (CO)		
Nitrogen Oxides (NO_X)		
Lead (Pb)		
Particulate Matter ($PM_{2.5}$)		
Particulate Matter (PM_{10})		
Total Particulate Matter (TSP)		
Sulfur Dioxide (SO_2)		
Volatile Organic Compounds (VOC)		
Hazardous Air Pollutants	Potential Emissions	
	PPH	TPY
Methanol	0.00468	0.0205
Regulated Pollutants other than Criteria and HAP	Potential Emissions	
	PPH	TPY

List the method(s) used to calculate the potential emissions (include dates of any stack tests conducted, versions of software used, source and dates of emission factors, etc.).

EPA TANKS Software

Applicable Requirements
List all applicable requirements for this emission unit. For each applicable requirement, include the underlying rule/regulation citation and/or construction permit with the condition number. (*Note: Title V permit condition numbers alone are not the underlying applicable requirements*). If an emission limit is calculated based on the type of source and design capacity or if a standard is based on a design parameter, this information should also be included. 1) Requirement: 45CSR§27-5.1. Permit Condition: 6.1.8. 2) Requirement: 45CSR§27-10.4. Permit Condition: 6.5.1.
_X_ Permit Shield
For all applicable requirements listed above, provide monitoring/testing/recordkeeping/reporting which shall be used to demonstrate compliance. If the method is based on a permit or rule, include the condition number or citation. (Note: Each requirement listed above must have an associated method of demonstrating compliance. If there is not already a required method in place, then a method must be proposed.) 1) Reporting - Permit Condition: 6.5.1.
Are you in compliance with all applicable requirements for this emission unit? _X_Yes ___No If no, complete the **Schedule of Compliance Form** as **ATTACHMENT F**.

ATTACHMENT E - Emission Unit Form

Emission Unit Description

Emission unit ID number:	**Emission unit name:**	**List any control devices associated with this emission unit:**
004-05	DrySilo	BGHS5

Provide a description of the emission unit (type, method of operation, design parameters, etc.):
Dry Fuel Silo is used for the storage of dry sawdust material.
This silo may either unload to the furnace, to be mixed with green fuel,
or into a hauling trailer.

Manufacturer:	**Model number:**	**Serial number:**
Laidig, Inc.	Super 243 (Unloader Model)	174S243
Construction date:	**Installation date:**	**Modification date(s):**
05/01/1995	05/01/1995	MM/DD/YYYY

Design Capacity (examples: furnaces - tons/hr, tanks - gallons):
26,239 cuft

Maximum Hourly Throughput:	**Maximum Annual Throughput:**	**Maximum Operating Schedule:**
		8760 hr

Fuel Usage Data **(fill out all applicable fields)**

Does this emission unit combust fuel? ___Yes _X_ **No**	**If yes, is it?** ___ Indirect Fired ___Direct Fired
Maximum design heat input and/or maximum horsepower rating:	**Type and Btu/hr rating of burners:**

List the primary fuel type(s) and if applicable, the secondary fuel type(s). For each fuel type listed, provide the maximum hourly and annual fuel usage for each.

Describe each fuel expected to be used during the term of the permit.

Fuel Type	Max. Sulfur Content	Max. Ash Content	BTU Value

Page _____ of _____

Emissions Data		
Criteria Pollutants	Potential Emissions	
	PPH	TPY
Carbon Monoxide (CO)		
Nitrogen Oxides (NO_X)		
Lead (Pb)		
Particulate Matter ($PM_{2.5}$)	0.009	0.0407
Particulate Matter (PM_{10})	0.0371	0.162
Total Particulate Matter (TSP)	0.19	0.83
Sulfur Dioxide (SO_2)		
Volatile Organic Compounds (VOC)		
Hazardous Air Pollutants	Potential Emissions	
	PPH	TPY
Regulated Pollutants other than Criteria and HAP	Potential Emissions	
	PPH	TPY

List the method(s) used to calculate the potential emissions (include dates of any stack tests conducted, versions of software used, source and dates of emission factors, etc.).

A factor of 0.005 gr/dscf was applied to the manufactures designed flow rate for BGHS5 to calculate PM emissions. (Emission factor derived from source testing performed at the Deerwood Plant)

Applicable Requirements
List all applicable requirements for this emission unit. For each applicable requirement, include the underlying rule/regulation citation and/or construction permit with the condition number. (*Note: Title V permit condition numbers alone are not the underlying applicable requirements*). If an emission limit is calculated based on the type of source and design capacity or if a standard is based on a design parameter, this information should also be included. 1) Requirement: 45CSR§7-3.1. Permit Condition: 6.1.1. 2) Requirement: 45CSR§7-3.2. Permit Condition: 6.1.2. 3) Requirement: 45CSR§7-3.2. Permit Condition: 6.1.3. 4) Requirement: 45CSR§7-4.1., 45CSR13, R13-1843, 4.1.11. & 4.1.13. Permit Condition: 6.1.4. 5) Requirement: 45CSR§7-4.12. Permit Condition: 6.1.5. 6) Requirement: 45CSR§7-9.1. Permit Condition: 6.1.6. 7) Requirement: 45CSR§7-10.3. Permit Condition: 6.1.7.
_X_ Permit Shield
For all applicable requirements listed above, provide monitoring/testing/recordkeeping/reporting which shall be used to demonstrate compliance. If the method is based on a permit or rule, include the condition number or citation. (Note: Each requirement listed above must have an associated method of demonstrating compliance. If there is not already a required method in place, then a method must be proposed.) 1) Monitoring/Recordkeeping - Permit Condition: 6.2.3., 6.4.1. 2) Monitoring/Recordkeeping - Permit Condition: 6.2.3., 6.4.1. 3) Monitoring/Recordkeeping - Permit Condition: 6.2.3., 6.4.1. 4) Monitoring/Recordkeeping - Permit Condition: 6.1.14, 6.2.1, 6.2.3. 5) Standard - Permit Condition: 6.1.5. 6) Reporting - Permit Condition: 6.1.6. 7) Recordkeeping - Permit Condition: 6.1.7.
Are you in compliance with all applicable requirements for this emission unit? _X_Yes ___No If no, complete the **Schedule of Compliance Form** as **ATTACHMENT F**.

ATTACHMENT E - Emission Unit Form

Emission Unit Description

Emission unit ID number:	**Emission unit name:**	**List any control devices associated with this emission unit:**
004-06	MlamBooth	

Provide a description of the emission unit (type, method of operation, design parameters, etc.):
Designed to efficiently apply water based sealer to the ends and sides of LVL stacks by using advanced air gun technology.
A state-of-the-art, air filtration system brings air in through the top of the booth, creating a down draft that will carry overspray down through two stages of filters into tunnels built under the booth, and then through a final filter where it exits back to mill.

Manufacturer:	**Model number:**	**Serial number:**
WVCO Precision Technologies	Job #02-04-36	N/A
Construction date:	**Installation date:**	**Modification date(s):**
01/01/2003	01/01/2003	MM/DD/YYYY

Design Capacity (examples: furnaces - tons/hr, tanks - gallons):
Stack Width of 5 1/2" to 24"
Stack Height of 10 1/2" to 12 1/4"

Maximum Hourly Throughput:	**Maximum Annual Throughput:**	**Maximum Operating Schedule:**
13.7 gal/hr	120,000 gallons	8760 hr

Fuel Usage Data **(fill out all applicable fields)**

Does this emission unit combust fuel? ___Yes **_X_ No**	**If yes, is it?** ___ Indirect Fired ___Direct Fired
Maximum design heat input and/or maximum horsepower rating:	**Type and Btu/hr rating of burners:**

List the primary fuel type(s) and if applicable, the secondary fuel type(s). For each fuel type listed, provide the maximum hourly and annual fuel usage for each.

Describe each fuel expected to be used during the term of the permit.

Fuel Type	Max. Sulfur Content	Max. Ash Content	BTU Value

Page _____ of _____

Emissions Data		
Criteria Pollutants	Potential Emissions	
	PPH	TPY
Carbon Monoxide (CO)		
Nitrogen Oxides (NO_X)		
Lead (Pb)		
Particulate Matter ($PM_{2.5}$)		
Particulate Matter (PM_{10})		
Total Particulate Matter (TSP)		
Sulfur Dioxide (SO_2)		
Volatile Organic Compounds (VOC)	2.0	5.0
Hazardous Air Pollutants	Potential Emissions	
	PPH	TPY
Regulated Pollutants other than Criteria and HAP	Potential Emissions	
	PPH	TPY

List the method(s) used to calculate the potential emissions (include dates of any stack tests conducted, versions of software used, source and dates of emission factors, etc.).

Applicable Requirements
List all applicable requirements for this emission unit. For each applicable requirement, include the underlying rule/regulation citation and/or construction permit with the condition number. (*Note: Title V permit condition numbers alone are not the underlying applicable requirements*). If an emission limit is calculated based on the type of source and design capacity or if a standard is based on a design parameter, this information should also be included. 1) Requirement: 45CSR§7-3.1. Permit Condition: 6.1.1. 2) Requirement: 45CSR§7-3.2. Permit Condition: 6.1.2. 3) Requirement: 45CSR§7-4.12. Permit Condition: 6.1.5. 4) Requirement: 45CSR§7-9.1. Permit Condition: 6.1.6. 5) Requirement: 45CSR§7-10.3. Permit Condition: 6.1.7. 6) Requirement: 45CSR§30-12.7. Permit Condition: 6.1.12. 7) Requirement: 45CSR§30-12.7. Permit Condition: 6.1.13.
_X_ Permit Shield
For all applicable requirements listed above, provide monitoring/testing/recordkeeping/reporting which shall be used to demonstrate compliance. If the method is based on a permit or rule, include the condition number or citation. (Note: Each requirement listed above must have an associated method of demonstrating compliance. If there is not already a required method in place, then a method must be proposed.) 1) Monitoring/Recordkeeping - Permit Condition: 6.2.3., 6.4.1. 2) Monitoring/Recordkeeping - Permit Condition: 6.2.3., 6.4.1. 3) Standard - Permit Condition: 6.1.5. 4) Reporting - Permit Condition: 6.1.6. 5) Recordkeeping - Permit Condition: 6.1.7. 6) Monitoring - Permit Condition: 6.2.2. 7) Monitoring - Permit Condition: 6.2.2.
Are you in compliance with all applicable requirements for this emission unit? _X_Yes ___No If no, complete the **Schedule of Compliance Form** as **ATTACHMENT F**.

ATTACHMENT E - Emission Unit Form

Emission Unit Description

Emission unit ID number:	**Emission unit name:**	**List any control devices associated with this emission unit:**
004-07	Chip Bin	

Provide a description of the emission unit (type, method of operation, design parameters, etc.):
Chip bin is used for storage of green, wet wood chips.

Manufacturer:	**Model number:**	**Serial number:**
Clarke's Allied, Inc.	68 Unit	95127
Construction date:	**Installation date:**	**Modification date(s):**
05/01/1995	05/01/1995	MM/DD/YYYY

Design Capacity (examples: furnaces - tons/hr, tanks - gallons):
13,600 cuft

Maximum Hourly Throughput:	**Maximum Annual Throughput:**	**Maximum Operating Schedule:**
6.77 tons/hr	59,305 tons	8760 hr

Fuel Usage Data **(fill out all applicable fields)**

Does this emission unit combust fuel? ___Yes _X_ **No**	**If yes, is it?** ___ Indirect Fired ___Direct Fired
Maximum design heat input and/or maximum horsepower rating:	**Type and Btu/hr rating of burners:**

List the primary fuel type(s) and if applicable, the secondary fuel type(s). For each fuel type listed, provide the maximum hourly and annual fuel usage for each.

Describe each fuel expected to be used during the term of the permit.

Fuel Type	Max. Sulfur Content	Max. Ash Content	BTU Value

Page _____ of _____

Emissions Data		
Criteria Pollutants	Potential Emissions	
	PPH	TPY
Carbon Monoxide (CO)		
Nitrogen Oxides (NO_X)		
Lead (Pb)		
Particulate Matter ($PM_{2.5}$)	0.033	0.1445
Particulate Matter (PM_{10})	0.2234	0.9785
Total Particulate Matter (TSP)	0.4874	2.135
Sulfur Dioxide (SO_2)		
Volatile Organic Compounds (VOC)		
Hazardous Air Pollutants	Potential Emissions	
	PPH	TPY
Regulated Pollutants other than Criteria and HAP	Potential Emissions	
	PPH	TPY

List the method(s) used to calculate the potential emissions (include dates of any stack tests conducted, versions of software used, source and dates of emission factors, etc.).

AP-42 Bin Loading and Unloading (green or coarse wood waste)

Applicable Requirements
List all applicable requirements for this emission unit. For each applicable requirement, include the underlying rule/regulation citation and/or construction permit with the condition number. (*Note: Title V permit condition numbers alone are not the underlying applicable requirements*). If an emission limit is calculated based on the type of source and design capacity or if a standard is based on a design parameter, this information should also be included. 1) Requirement: 45CSR§7-3.1. Permit Condition: 6.1.1. 2) Requirement: 45CSR§7-3.2. Permit Condition: 6.1.2. 3) Requirement: 45CSR§7-3.2. Permit Condition: 6.1.3. 4) Requirement: 45CSR§7-4.12. Permit Condition: 6.1.5. 5) Requirement: 45CSR§7-9.1. Permit Condition: 6.1.6. 6) Requirement: 45CSR§7-10.3. Permit Condition: 6.1.7.
_X_ Permit Shield
For all applicable requirements listed above, provide monitoring/testing/recordkeeping/reporting which shall be used to demonstrate compliance. If the method is based on a permit or rule, include the condition number or citation. (Note: Each requirement listed above must have an associated method of demonstrating compliance. If there is not already a required method in place, then a method must be proposed.) 1) Monitoring/Recordkeeping - Permit Condition: 6.2.3., 6.4.1. 2) Monitoring/Recordkeeping - Permit Condition: 6.2.3., 6.4.1. 3) Monitoring/Recordkeeping - Permit Condition: 6.2.3., 6.4.1. 4) Standard - Permit Condition: 6.1.5. 5) Reporting - Permit Condition: 6.1.6. 6) Recordkeeping - Permit Condition: 6.1.7.
Are you in compliance with all applicable requirements for this emission unit? _X_Yes ___No If no, complete the **Schedule of Compliance Form** as **ATTACHMENT F**.

ATTACHMENT E - Emission Unit Form

Emission Unit Description

Emission unit ID number:	**Emission unit name:**	**List any control devices associated with this emission unit:**
004-08	Fuel House	

Provide a description of the emission unit (type, method of operation, design parameters, etc.):
Fuel house is used for the storage of wood fuel.
Deisgned by Mid-South and constructed by Pierce Construction.

Manufacturer:	**Model number:**	**Serial number:**
Pierce Construction	N/A	N/A
Construction date:	**Installation date:**	**Modification date(s):**
05/01/1995	05/01/1995	MM/DD/YYYY

Design Capacity (examples: furnaces - tons/hr, tanks - gallons): 8 tons/hr
96,000 cuft

Maximum Hourly Throughput:	**Maximum Annual Throughput:**	**Maximum Operating Schedule:**
8 tons/hr	70,080 tons	8760 hr

Fuel Usage Data **(fill out all applicable fields)**

Does this emission unit combust fuel? ___Yes **_X_ No**	**If yes, is it?** ___ Indirect Fired ___Direct Fired
Maximum design heat input and/or maximum horsepower rating:	**Type and Btu/hr rating of burners:**

List the primary fuel type(s) and if applicable, the secondary fuel type(s). For each fuel type listed, provide the maximum hourly and annual fuel usage for each.

Describe each fuel expected to be used during the term of the permit.

Fuel Type	Max. Sulfur Content	Max. Ash Content	BTU Value

Page _____ of _____

Emissions Data		
Criteria Pollutants	Potential Emissions	
	PPH	TPY
Carbon Monoxide (CO)		
Nitrogen Oxides (NO_X)		
Lead (Pb)		
Particulate Matter ($PM_{2.5}$)	0.02	0.086
Particulate Matter (PM_{10})	0.133	0.582
Total Particulate Matter (TSP)	0.29	1.27
Sulfur Dioxide (SO_2)		
Volatile Organic Compounds (VOC)		
Hazardous Air Pollutants	Potential Emissions	
	PPH	TPY
Regulated Pollutants other than Criteria and HAP	Potential Emissions	
	PPH	TPY

List the method(s) used to calculate the potential emissions (include dates of any stack tests conducted, versions of software used, source and dates of emission factors, etc.).

AP-42 Bin Loading and Unloading (green or coarse wood waste)

Applicable Requirements
List all applicable requirements for this emission unit. For each applicable requirement, include the underlying rule/regulation citation and/or construction permit with the condition number. (*Note: Title V permit condition numbers alone are not the underlying applicable requirements*). If an emission limit is calculated based on the type of source and design capacity or if a standard is based on a design parameter, this information should also be included. 1) Requirement: 45CSR§7-3.1. Permit Condition: 6.1.1. 2) Requirement: 45CSR§7-3.2. Permit Condition: 6.1.2. 3) Requirement: 45CSR§7-3.2. Permit Condition: 6.1.3. 4) Requirement: 45CSR§7-4.12. Permit Condition: 6.1.5. 5) Requirement: 45CSR§7-9.1. Permit Condition: 6.1.6. 6) Requirement: 45CSR§7-10.3. Permit Condition: 6.1.7.
_X_ Permit Shield
For all applicable requirements listed above, provide monitoring/testing/recordkeeping/reporting which shall be used to demonstrate compliance. If the method is based on a permit or rule, include the condition number or citation. (Note: Each requirement listed above must have an associated method of demonstrating compliance. If there is not already a required method in place, then a method must be proposed.) 1) Monitoring/Recordkeeping - Permit Condition: 6.2.3., 6.4.1. 2) Monitoring/Recordkeeping - Permit Condition: 6.2.3., 6.4.1. 3) Monitoring/Recordkeeping - Permit Condition: 6.2.3., 6.4.1. 4) Standard - Permit Condition: 6.1.5. 5) Reporting - Permit Condition: 6.1.6. 6) Recordkeeping - Permit Condition: 6.1.7.
Are you in compliance with all applicable requirements for this emission unit? _X_Yes ___No If no, complete the **Schedule of Compliance Form** as **ATTACHMENT F**.

ATTACHMENT E - Emission Unit Form

Emission Unit Description

Emission unit ID number:	**Emission unit name:**	**List any control devices associated with this emission unit:**
005-01	PlamPress	

Provide a description of the emission unit (type, method of operation, design parameters, etc.):
Parallam press performs the pressing operation to produce Parallam (PSL) product.

Manufacturer:	**Model number:**	**Serial number:**
Kusters	Parallam Press #3	N/A
Construction date:	**Installation date:**	**Modification date(s):**
05/01/1995	05/01/1995	MM/DD/YYYY

Design Capacity (examples: furnaces - tons/hr, tanks - gallons):
456 cuft/hr

Maximum Hourly Throughput:	**Maximum Annual Throughput:**	**Maximum Operating Schedule:**
685 cuft/hr	6,000,000 cuft	8760 hr

Fuel Usage Data **(fill out all applicable fields)**

Does this emission unit combust fuel? ___Yes **_X_ No**	**If yes, is it?** ___ Indirect Fired ___Direct Fired
Maximum design heat input and/or maximum horsepower rating:	**Type and Btu/hr rating of burners:**

List the primary fuel type(s) and if applicable, the secondary fuel type(s). For each fuel type listed, provide the maximum hourly and annual fuel usage for each.

Describe each fuel expected to be used during the term of the permit.

Fuel Type	Max. Sulfur Content	Max. Ash Content	BTU Value

Page _____ of _____

Emissions Data		
Criteria Pollutants	Potential Emissions	
	PPH	TPY
Carbon Monoxide (CO)		
Nitrogen Oxides (NO_X)		
Lead (Pb)		
Particulate Matter ($PM_{2.5}$)		
Particulate Matter (PM_{10})		
Total Particulate Matter (TSP)		
Sulfur Dioxide (SO_2)		
Volatile Organic Compounds (VOC)	11.86	51.97
Hazardous Air Pollutants	Potential Emissions	
	PPH	TPY
Formaldehyde	1.15	5.04
Phenol	0.05	0.22
Methanol	7.42	32.5
Regulated Pollutants other than Criteria and HAP	Potential Emissions	
	PPH	TPY

List the method(s) used to calculate the potential emissions (include dates of any stack tests conducted, versions of software used, source and dates of emission factors, etc.).

Neste's Sealed Caul Plate Test Data (1995)

Applicable Requirements
List all applicable requirements for this emission unit. For each applicable requirement, include the underlying rule/regulation citation and/or construction permit with the condition number. (*Note: Title V permit condition numbers alone are not the underlying applicable requirements*). If an emission limit is calculated based on the type of source and design capacity or if a standard is based on a design parameter, this information should also be included. 1) Requirement: 45CSR§7-3.1. Permit Condition: 6.1.1. 2) Requirement: 45CSR§7-3.2. Permit Condition: 6.1.2. 3) Requirement: 45CSR§7-4.12. Permit Condition: 6.1.5. 4) Requirement: 45CSR§7-9.1. Permit Condition: 6.1.6. 5) Requirement: 45CSR§7-10.3. Permit Condition: 6.1.7. 6) Requirement: 45CSR13, R13-1843, 4.1.3. Permit Condition: 6.1.9. 7) Requirement: 45CSR13, R13-1843, 4.1.4. Permit Condition: 6.1.11. 8) Requirement: 45CSR34, 40. C.F.R. § 63.2241 and 40 C.F.R. Part 63 Subpart DDDD, Table 3 Permit Condition: 7.1.1. 9) Requirement: 45CSR34, 40. C.F.R. § 63.2250(a) Permit Condition: 7.1.2.
_X_ Permit Shield
For all applicable requirements listed above, provide monitoring/testing/recordkeeping/reporting which shall be used to demonstrate compliance. If the method is based on a permit or rule, include the condition number or citation. (Note: Each requirement listed above must have an associated method of demonstrating compliance. If there is not already a required method in place, then a method must be proposed.) 1) Monitoring/Recordkeeping - Permit Condition: 6.2.3., 6.4.1. 2) Monitoring/Recordkeeping - Permit Condition: 6.2.3., 6.4.1. 3) Standard - Permit Condition: 6.1.5. 4) Reporting - Permit Condition: 6.1.6. 5) Recordkeeping - Permit Condition: 6.1.7. 6) Recordkeeping - Permit Condition: 6.4.1. 7) Recordkeeping - Permit Condition: 6.4.1. 8) Recordkeeping/Reporting - Permit Condition: 7.4.1. through 7.4.3., 7.5.1. through 7.5.6. 9) Recordkeeping/Reporting - Permit Condition: 7.4.1. through 7.4.3., 7.5.1. through 7.5.6.
Are you in compliance with all applicable requirements for this emission unit? _X_Yes ___No If no, complete the **Schedule of Compliance Form** as **ATTACHMENT F**.

ATTACHMENT E - Emission Unit Form

Emission Unit Description

Emission unit ID number:	**Emission unit name:**	**List any control devices associated with this emission unit:**
005-03	PlamLayup	BGHS1

Provide a description of the emission unit (type, method of operation, design parameters, etc.):
PlamLayup - Rotary stranders, short strand hogs and billet cut-off saw

Manufacturer:	**Model number:**	**Serial number:**
Durand Raute, Blacks Brothers	N/A	N/A
Construction date:	**Installation date:**	**Modification date(s):**
05/01/1995	05/01/1995	MM/DD/YYYY

Design Capacity (examples: furnaces - tons/hr, tanks - gallons):
N/A

Maximum Hourly Throughput:	**Maximum Annual Throughput:**	**Maximum Operating Schedule:**
N/A	N/A	8760 hr

Fuel Usage Data **(fill out all applicable fields)**

Does this emission unit combust fuel? ___Yes _X_ **No**	**If yes, is it?** ___ Indirect Fired ___Direct Fired
Maximum design heat input and/or maximum horsepower rating:	**Type and Btu/hr rating of burners:**

List the primary fuel type(s) and if applicable, the secondary fuel type(s). For each fuel type listed, provide the maximum hourly and annual fuel usage for each.

Describe each fuel expected to be used during the term of the permit.

Fuel Type	Max. Sulfur Content	Max. Ash Content	BTU Value

Page _____ of _____

Emissions Data		
Criteria Pollutants	Potential Emissions	
	PPH	TPY
Carbon Monoxide (CO)		
Nitrogen Oxides (NO_X)		
Lead (Pb)		
Particulate Matter ($PM_{2.5}$)	0.118	0.515
Particulate Matter (PM_{10})	0.468	2.05
Total Particulate Matter (TSP)	2.4	10.51
Sulfur Dioxide (SO_2)		
Volatile Organic Compounds (VOC)		
Hazardous Air Pollutants	Potential Emissions	
	PPH	TPY
Regulated Pollutants other than Criteria and HAP	Potential Emissions	
	PPH	TPY

List the method(s) used to calculate the potential emissions (include dates of any stack tests conducted, versions of software used, source and dates of emission factors, etc.).

A factor of 0.005 gr/dscf was applied to the manufactures designed flow rate for BGHS1 to calculate PM emissions. (Emission factor derived from source testing performed at the Deerwood plant)

Applicable Requirements
List all applicable requirements for this emission unit. For each applicable requirement, include the underlying rule/regulation citation and/or construction permit with the condition number. (*Note: Title V permit condition numbers alone are not the underlying applicable requirements*). If an emission limit is calculated based on the type of source and design capacity or if a standard is based on a design parameter, this information should also be included. 1) Requirement: 45CSR§7-3.1. Permit Condition: 6.1.1. 2) Requirement: 45CSR§7-3.2. Permit Condition: 6.1.2. 3) Requirement: 45CSR§7-4.1., 45CSR13, R13-1843, 4.1.11. & 4.1.13. Permit Condition: 6.1.4. 4) Requirement: 45CSR§7-4.12. Permit Condition: 6.1.5. 5) Requirement: 45CSR§7-9.1. Permit Condition: 6.1.6. 6) Requirement: 45CSR§7-10.3. Permit Condition: 6.1.7.
_X_ Permit Shield
For all applicable requirements listed above, provide monitoring/testing/recordkeeping/reporting which shall be used to demonstrate compliance. If the method is based on a permit or rule, include the condition number or citation. (Note: Each requirement listed above must have an associated method of demonstrating compliance. If there is not already a required method in place, then a method must be proposed.) 1) Monitoring/Recordkeeping - Permit Condition: 6.2.3., 6.4.1. 2) Monitoring/Recordkeeping - Permit Condition: 6.2.3., 6.4.1. 3) Monitoring/Recordkeeping - Permit Condition: 6.1.14., 6.2.1., 6.2.3. 4) Standard - Permit Condition: 6.1.5. 5) Reporting - Permit Condition: 6.1.6. 6) Recordkeeping - Permit Condition: 6.1.7.
Are you in compliance with all applicable requirements for this emission unit? _X_Yes ___No If no, complete the **Schedule of Compliance Form** as **ATTACHMENT F**.

ATTACHMENT E - Emission Unit Form

Emission Unit Description

Emission unit ID number:	**Emission unit name:**	**List any control devices associated with this emission unit:**
005-04	PlamReman1	BGHS2A

Provide a description of the emission unit (type, method of operation, design parameters, etc.):
PlamReman1 - Billet reject saw, sizer, package saw and defect saw
Parallam reman is used to finish the Parallam (PSL) product for shipping.

Manufacturer:	**Model number:**	**Serial number:**
USNR	N/A	N/A
Construction date:	**Installation date:**	**Modification date(s):**
05/01/1995	05/01/1995	MM/DD/YYYY

Design Capacity (examples: furnaces - tons/hr, tanks - gallons):
N/A

Maximum Hourly Throughput:	**Maximum Annual Throughput:**	**Maximum Operating Schedule:**
N/A	N/A	8760 hr

Fuel Usage Data **(fill out all applicable fields)**

Does this emission unit combust fuel? ___Yes _X_ **No**	**If yes, is it?** ___ Indirect Fired ___Direct Fired
Maximum design heat input and/or maximum horsepower rating:	**Type and Btu/hr rating of burners:**

List the primary fuel type(s) and if applicable, the secondary fuel type(s). For each fuel type listed, provide the maximum hourly and annual fuel usage for each.

Describe each fuel expected to be used during the term of the permit.

Fuel Type	Max. Sulfur Content	Max. Ash Content	BTU Value

Page _____ of _____

Emissions Data		
Criteria Pollutants	Potential Emissions	
	PPH	TPY
Carbon Monoxide (CO)		
Nitrogen Oxides (NO_X)		
Lead (Pb)		
Particulate Matter ($PM_{2.5}$)	0.0936	0.41
Particulate Matter (PM_{10})	0.372	1.63
Total Particulate Matter (TSP)	1.91	8.37
Sulfur Dioxide (SO_2)		
Volatile Organic Compounds (VOC)		
Hazardous Air Pollutants	Potential Emissions	
	PPH	TPY
Regulated Pollutants other than Criteria and HAP	Potential Emissions	
	PPH	TPY

List the method(s) used to calculate the potential emissions (include dates of any stack tests conducted, versions of software used, source and dates of emission factors, etc.).

A factor of 0.005 gr/dscf was applied to the manufactures designed flow rate for BHGS2A to calculate PM emissions. (Emission factor derived from source testing performed at the Deerwood plant)

Applicable Requirements
List all applicable requirements for this emission unit. For each applicable requirement, include the underlying rule/regulation citation and/or construction permit with the condition number. (*Note: Title V permit condition numbers alone are not the underlying applicable requirements*). If an emission limit is calculated based on the type of source and design capacity or if a standard is based on a design parameter, this information should also be included. 1) Requirement: 45CSR§7-3.1. Permit Condition: 6.1.1. 2) Requirement: 45CSR§7-3.2. Permit Condition: 6.1.2. 3) Requirement: 45CSR§7-4.1., 45CSR13, R13-1843, 4.1.11. & 4.1.13. Permit Condition: 6.1.4. 4) Requirement: 45CSR§7-4.12. Permit Condition: 6.1.5. 5) Requirement: 45CSR§7-9.1. Permit Condition: 6.1.6. 6) Requirement: 45CSR§7-10.3. Permit Condition: 6.1.7. 7) Requirement: 45CSR34, 40. C.F.R. § 63.2241 and 40 C.F.R. Part 63 Subpart DDDD, Table 3 Permit Condition: 7.1.1. 8) Requirement: 45CSR34, 40. C.F.R. § 63.2250(a) Permit Condition: 7.1.2.
_X_ Permit Shield
For all applicable requirements listed above, provide monitoring/testing/recordkeeping/reporting which shall be used to demonstrate compliance. If the method is based on a permit or rule, include the condition number or citation. (Note: Each requirement listed above must have an associated method of demonstrating compliance. If there is not already a required method in place, then a method must be proposed.) 1) Monitoring/Recordkeeping - Permit Condition: 6.2.3., 6.4.1. 2) Monitoring/Recordkeeping - Permit Condition: 6.2.3., 6.4.1. 3) Monitoring/Recordkeeping - Permit Condition: 6.1.14., 6.2.1., 6.2.3. 4) Standard - Permit Condition: 6.1.5. 5) Reporting - Permit Condition: 6.1.6. 6) Recordkeeping - Permit Condition: 6.1.7. 7) Recordkeeping/Reporting - Permit Condition: 7.4.1. through 7.4.3., 7.5.1. through 7.5.6. 8) Recordkeeping/Reporting - Permit Condition: 7.4.1. through 7.4.3., 7.5.1. through 7.5.6.
Are you in compliance with all applicable requirements for this emission unit? _X_Yes ___No If no, complete the **Schedule of Compliance Form** as **ATTACHMENT F**.

ATTACHMENT E - Emission Unit Form

Emission Unit Description

Emission unit ID number:	**Emission unit name:**	**List any control devices associated with this emission unit:**
005-05	PlamReman2	BGHS2B

Provide a description of the emission unit (type, method of operation, design parameters, etc.):
PlamReman2 - Twin band saw and planer
Parallam reman is used to finish the Parallam (PSL) product for shipping.

Manufacturer:	**Model number:**	**Serial number:**
USNR	N/A	N/A
Construction date:	**Installation date:**	**Modification date(s):**
05/01/1995	05/01/1995	MM/DD/YYYY

Design Capacity (examples: furnaces - tons/hr, tanks - gallons):
N/A

Maximum Hourly Throughput:	**Maximum Annual Throughput:**	**Maximum Operating Schedule:**
N/A	N/A	8760 hr

Fuel Usage Data **(fill out all applicable fields)**

Does this emission unit combust fuel? ___Yes _X_ **No**	**If yes, is it?** ___ Indirect Fired ___Direct Fired
Maximum design heat input and/or maximum horsepower rating:	**Type and Btu/hr rating of burners:**

List the primary fuel type(s) and if applicable, the secondary fuel type(s). For each fuel type listed, provide the maximum hourly and annual fuel usage for each.

Describe each fuel expected to be used during the term of the permit.

Fuel Type	Max. Sulfur Content	Max. Ash Content	BTU Value

Page _____ of _____

Emissions Data		
Criteria Pollutants	Potential Emissions	
	PPH	TPY
Carbon Monoxide (CO)		
Nitrogen Oxides (NO_X)		
Lead (Pb)		
Particulate Matter ($PM_{2.5}$)	0.107	0.468
Particulate Matter (PM_{10})	0.425	1.86
Total Particulate Matter (TSP)	2.18	9.55
Sulfur Dioxide (SO_2)		
Volatile Organic Compounds (VOC)		
Hazardous Air Pollutants	Potential Emissions	
	PPH	TPY
Regulated Pollutants other than Criteria and HAP	Potential Emissions	
	PPH	TPY

List the method(s) used to calculate the potential emissions (include dates of any stack tests conducted, versions of software used, source and dates of emission factors, etc.).

A factor of 0.005 gr/dscf was applied to the manufactures designed flow rate for BHGS2B to calculate PM emissions. (Emission factor derived from source testing performed at the Deerwood plant)

Applicable Requirements
List all applicable requirements for this emission unit. For each applicable requirement, include the underlying rule/regulation citation and/or construction permit with the condition number. (*Note: Title V permit condition numbers alone are not the underlying applicable requirements*). If an emission limit is calculated based on the type of source and design capacity or if a standard is based on a design parameter, this information should also be included. 1) Requirement: 45CSR§7-3.1. Permit Condition: 6.1.1. 2) Requirement: 45CSR§7-3.2. Permit Condition: 6.1.2. 3) Requirement: 45CSR§7-4.1., 45CSR13, R13-1843, 4.1.11. & 4.1.13. Permit Condition: 6.1.4. 4) Requirement: 45CSR§7-4.12. Permit Condition: 6.1.5. 5) Requirement: 45CSR§7-9.1. Permit Condition: 6.1.6. 6) Requirement: 45CSR§7-10.3. Permit Condition: 6.1.7. 7) Requirement: 45CSR34, 40. C.F.R. § 63.2241 and 40 C.F.R. Part 63 Subpart DDDD, Table 3 Permit Condition: 7.1.1. 8) Requirement: 45CSR34, 40. C.F.R. § 63.2250(a) Permit Condition: 7.1.2.
_X_ Permit Shield
For all applicable requirements listed above, provide monitoring/testing/recordkeeping/reporting which shall be used to demonstrate compliance. If the method is based on a permit or rule, include the condition number or citation. (Note: Each requirement listed above must have an associated method of demonstrating compliance. If there is not already a required method in place, then a method must be proposed.) 1) Monitoring/Recordkeeping - Permit Condition: 6.2.3., 6.4.1. 2) Monitoring/Recordkeeping - Permit Condition: 6.2.3., 6.4.1. 3) Monitoring/Recordkeeping - Permit Condition: 6.1.14., 6.2.1., 6.2.3. 4) Standard - Permit Condition: 6.1.5. 5) Reporting - Permit Condition: 6.1.6. 6) Recordkeeping - Permit Condition: 6.1.7. 7) Recordkeeping/Reporting - Permit Condition: 7.4.1. through 7.4.3., 7.5.1. through 7.5.6. 8) Recordkeeping/Reporting - Permit Condition: 7.4.1. through 7.4.3., 7.5.1. through 7.5.6.
Are you in compliance with all applicable requirements for this emission unit? _X_Yes ___No If no, complete the **Schedule of Compliance Form** as **ATTACHMENT F**.

ATTACHMENT E - Emission Unit Form

Emission Unit Description

Emission unit ID number:	**Emission unit name:**	**List any control devices associated with this emission unit:**
005-06	PlamTanks	

Provide a description of the emission unit (type, method of operation, design parameters, etc.):
Two (2) identical tanks that store resin.

Manufacturer:	**Model number:**	**Serial number:**
Ralph Jackson	N/A	N/A
Construction date:	**Installation date:**	**Modification date(s):**
05/01/1995	05/01/1995	MM/DD/YYYY

Design Capacity (examples: furnaces - tons/hr, tanks - gallons): 15,000 gallons (each)

Maximum Hourly Throughput:	**Maximum Annual Throughput:**	**Maximum Operating Schedule:**
2,968 lbs/hr	13,000 tons	8760 hr

Fuel Usage Data **(fill out all applicable fields)**

Does this emission unit combust fuel? ___Yes **_X_ No**	**If yes, is it?** ___ Indirect Fired ___Direct Fired
Maximum design heat input and/or maximum horsepower rating:	**Type and Btu/hr rating of burners:**

List the primary fuel type(s) and if applicable, the secondary fuel type(s). For each fuel type listed, provide the maximum hourly and annual fuel usage for each.

Describe each fuel expected to be used during the term of the permit.

Fuel Type	Max. Sulfur Content	Max. Ash Content	BTU Value

Page _____ of _____

Emissions Data		
Criteria Pollutants	Potential Emissions	
	PPH	TPY
Carbon Monoxide (CO)		
Nitrogen Oxides (NO_X)		
Lead (Pb)		
Particulate Matter ($PM_{2.5}$)		
Particulate Matter (PM_{10})		
Total Particulate Matter (TSP)		
Sulfur Dioxide (SO_2)		
Volatile Organic Compounds (VOC)		
Hazardous Air Pollutants	Potential Emissions	
	PPH	TPY
Methanol	0.00766	0.0335
Regulated Pollutants other than Criteria and HAP	Potential Emissions	
	PPH	TPY

List the method(s) used to calculate the potential emissions (include dates of any stack tests conducted, versions of software used, source and dates of emission factors, etc.).

EPA TANKS Software

Applicable Requirements
List all applicable requirements for this emission unit. For each applicable requirement, include the underlying rule/regulation citation and/or construction permit with the condition number. (*Note: Title V permit condition numbers alone are not the underlying applicable requirements*). If an emission limit is calculated based on the type of source and design capacity or if a standard is based on a design parameter, this information should also be included. 1) Requirement: 45CSR§27-5.1. Permit Condition: 6.1.8. 2) Requirement: 45CSR§27-10.4. Permit Condition: 6.5.1.
_X_ Permit Shield
For all applicable requirements listed above, provide monitoring/testing/recordkeeping/reporting which shall be used to demonstrate compliance. If the method is based on a permit or rule, include the condition number or citation. (Note: Each requirement listed above must have an associated method of demonstrating compliance. If there is not already a required method in place, then a method must be proposed.) 1) Reporting - Permit Condition: 6.5.1.
Are you in compliance with all applicable requirements for this emission unit? _X_Yes ___No If no, complete the **Schedule of Compliance Form** as **ATTACHMENT F**.

ATTACHMENT E - Emission Unit Form

Emission Unit Description

Emission unit ID number: 005-07	**Emission unit name:** Parallam Sealer Bulk Tank	**List any control devices associated with this emission unit:** N/A
Provide a description of the emission unit (type, method of operation, design parameters, etc.):		
Manufacturer: Unknown	**Model number:** Unknown	**Serial number:** N/A
Construction date: MM/DD/YYYY	**Installation date:** 2016	**Modification date(s):** MM/DD/YYYY
Design Capacity (examples: furnaces - tons/hr, tanks - gallons): 6,000 gallons		
Maximum Hourly Throughput: 9.12 gal/hr	**Maximum Annual Throughput:** 79,842 gallons/yr	**Maximum Operating Schedule:** 8760 hrs/yr

Fuel Usage Data **(fill out all applicable fields)**

Does this emission unit combust fuel? ___Yes **_X_ No**	**If yes, is it?** ___ Indirect Fired ___Direct Fired
Maximum design heat input and/or maximum horsepower rating:	**Type and Btu/hr rating of burners:**

List the primary fuel type(s) and if applicable, the secondary fuel type(s). For each fuel type listed, provide the maximum hourly and annual fuel usage for each.

Describe each fuel expected to be used during the term of the permit.

Fuel Type	Max. Sulfur Content	Max. Ash Content	BTU Value

Emissions Data		
Criteria Pollutants	Potential Emissions	
	PPH	TPY
Carbon Monoxide (CO)		
Nitrogen Oxides (NO_X)		
Lead (Pb)		
Particulate Matter ($PM_{2.5}$)		
Particulate Matter (PM_{10})	0.00	0.00
Total Particulate Matter (TSP)	0.00	0.00
Sulfur Dioxide (SO_2)		
Volatile Organic Compounds (VOC)		
Hazardous Air Pollutants	Potential Emissions	
	PPH	TPY
MDI	0.00	0.00
Regulated Pollutants other than Criteria and HAP	Potential Emissions	
	PPH	TPY

List the method(s) used to calculate the potential emissions (include dates of any stack tests conducted, versions of software used, source and dates of emission factors, etc.).

Tanks 4.0.9d Report

Applicable Requirements
List all applicable requirements for this emission unit. For each applicable requirement, include the underlying rule/regulation citation and/or construction permit with the condition number. (*Note: Title V permit condition numbers alone are not the underlying applicable requirements*). If an emission limit is calculated based on the type of source and design capacity or if a standard is based on a design parameter, this information should also be included. 1) Requirement: 45CSR§7-4.1., 45CSR13, R13-1843, 4.1.11. & 4.1.13. Permit Condition: 6.1.4.
_X_ Permit Shield
For all applicable requirements listed above, provide monitoring/testing/recordkeeping/reporting which shall be used to demonstrate compliance. If the method is based on a permit or rule, include the condition number or citation. (Note: Each requirement listed above must have an associated method of demonstrating compliance. If there is not already a required method in place, then a method must be proposed.) 1) Standard - Permit Condition: 6.1.4.
Are you in compliance with all applicable requirements for this emission unit? _X_Yes ___No If no, complete the **Schedule of Compliance Form** as **ATTACHMENT F**.

ATTACHMENT E - Emission Unit Form

Emission Unit Description

Emission unit ID number: 005-08	**Emission unit name:** Parallam Sealer Day Tank	**List any control devices associated with this emission unit:** N/A
Provide a description of the emission unit (type, method of operation, design parameters, etc.):		
Manufacturer: Unknown	**Model number:** Unknown	**Serial number:** N/A
Construction date: MM/DD/YYYY	**Installation date:** 2016	**Modification date(s):** MM/DD/YYYY
Design Capacity (examples: furnaces - tons/hr, tanks - gallons): 350 gallons		
Maximum Hourly Throughput: 9.12 gal/hr	**Maximum Annual Throughput:** 79,842 gallons/yr	**Maximum Operating Schedule:** 8760 hrs/yr

Fuel Usage Data **(fill out all applicable fields)**

Does this emission unit combust fuel? ___Yes **_X_ No**	**If yes, is it?** ___ Indirect Fired ___Direct Fired
Maximum design heat input and/or maximum horsepower rating:	**Type and Btu/hr rating of burners:**

List the primary fuel type(s) and if applicable, the secondary fuel type(s). For each fuel type listed, provide the maximum hourly and annual fuel usage for each.

Describe each fuel expected to be used during the term of the permit.

Fuel Type	Max. Sulfur Content	Max. Ash Content	BTU Value

Emissions Data		
Criteria Pollutants	Potential Emissions	
	PPH	TPY
Carbon Monoxide (CO)		
Nitrogen Oxides (NO_X)		
Lead (Pb)		
Particulate Matter ($PM_{2.5}$)		
Particulate Matter (PM_{10})	0.00	0.00
Total Particulate Matter (TSP)	0.00	0.00
Sulfur Dioxide (SO_2)		
Volatile Organic Compounds (VOC)		
Hazardous Air Pollutants	Potential Emissions	
	PPH	TPY
MDI	0.00	0.00
Regulated Pollutants other than Criteria and HAP	Potential Emissions	
	PPH	TPY

List the method(s) used to calculate the potential emissions (include dates of any stack tests conducted, versions of software used, source and dates of emission factors, etc.).

Tanks 4.0.9d Report

Applicable Requirements
List all applicable requirements for this emission unit. For each applicable requirement, include the underlying rule/regulation citation and/or construction permit with the condition number. (*Note: Title V permit condition numbers alone are not the underlying applicable requirements*). If an emission limit is calculated based on the type of source and design capacity or if a standard is based on a design parameter, this information should also be included. 1) Requirement: 45CSR§7-4.1., 45CSR13, R13-1843, 4.1.11. & 4.1.13. Permit Condition: 6.1.4.
_X_ Permit Shield
For all applicable requirements listed above, provide monitoring/testing/recordkeeping/reporting which shall be used to demonstrate compliance. If the method is based on a permit or rule, include the condition number or citation. (Note: Each requirement listed above must have an associated method of demonstrating compliance. If there is not already a required method in place, then a method must be proposed.) 1) Standard - Permit Condition: 6.1.4.
Are you in compliance with all applicable requirements for this emission unit? _X_Yes ___No If no, complete the **Schedule of Compliance Form** as **ATTACHMENT F**.

ATTACHMENT E - Emission Unit Form

Emission Unit Description

Emission unit ID number:	**Emission unit name:**	**List any control devices associated with this emission unit:**
005-09	Plam Sealer Booth	Booth Filter (3C)

Provide a description of the emission unit (type, method of operation, design parameters, etc.):
Designed to efficiently apply sealer to the parallam using advanced spray technology.
A state-of-the-art, air filtration system will bring air in through the inlet and outlet openings of the booth and direct emissions through high efficiency cartridge filters before exhausting outside the building through a common stack.

Manufacturer: Spray Systems	**Model number: Custom**	**Serial number:** N/A
Construction date: 2/15/2016	**Installation date:** 4/15/2016	**Modification date(s):** MM/DD/YYYY

Design Capacity (examples: furnaces - tons/hr, tanks - gallons):
9.12 gallons/hr of sealer

Maximum Hourly Throughput:	**Maximum Annual Throughput:**	**Maximum Operating Schedule:**
9.12 gal/hr	79,842 gallons/yr	8760 hrs/yr

Fuel Usage Data **(fill out all applicable fields)**

Does this emission unit combust fuel? ___Yes **_X_ No**	**If yes, is it?** ___ Indirect Fired ___Direct Fired
Maximum design heat input and/or maximum horsepower rating:	**Type and Btu/hr rating of burners:**

List the primary fuel type(s) and if applicable, the secondary fuel type(s). For each fuel type listed, provide the maximum hourly and annual fuel usage for each.

Describe each fuel expected to be used during the term of the permit.

Fuel Type	Max. Sulfur Content	Max. Ash Content	BTU Value

Emissions Data		
Criteria Pollutants	Potential Emissions	
	PPH	TPY
Carbon Monoxide (CO)		
Nitrogen Oxides (NO_X)		
Lead (Pb)		
Particulate Matter ($PM_{2.5}$)		
Particulate Matter (PM_{10})	28.00	122.64
Total Particulate Matter (TSP)	28.00	122.64
Sulfur Dioxide (SO_2)		
Volatile Organic Compounds (VOC)		
Hazardous Air Pollutants	Potential Emissions	
	PPH	TPY
MDI	28	122.64
Regulated Pollutants other than Criteria and HAP	Potential Emissions	
	PPH	TPY

List the method(s) used to calculate the potential emissions (include dates of any stack tests conducted, versions of software used, source and dates of emission factors, etc.).

Engineering Estimates based on the amount of material needed for a given sealer thickness (g/sq ft) on product. These estimates equate to 9.12gal/hr of sealer sprayed while maintaining a 70% transfer efficiency.

Applicable Requirements
List all applicable requirements for this emission unit. For each applicable requirement, include the underlying rule/regulation citation and/or construction permit with the condition number. (*Note: Title V permit condition numbers alone are not the underlying applicable requirements*). If an emission limit is calculated based on the type of source and design capacity or if a standard is based on a design parameter, this information should also be included. 1) Requirement: 45CSR§7-3.1. Permit Condition: 6.1.1. 2) Requirement: 45CSR§7-3.2. Permit Condition: 6.1.2. 3) Requirement: 45CSR§7-4.1., 45CSR13, R13-1843, 4.1.11. & 4.1.13. Permit Condition: 6.1.4. 4) Requirement: 45CSR§7-4.12. Permit Condition: 6.1.5. 5) Requirement: 45CSR§7-9.1. Permit Condition: 6.1.6. 6) Requirement: 45CSR§7-10.3. Permit Condition: 6.1.7.
_X_ Permit Shield
For all applicable requirements listed above, provide monitoring/testing/recordkeeping/reporting which shall be used to demonstrate compliance. If the method is based on a permit or rule, include the condition number or citation. (Note: Each requirement listed above must have an associated method of demonstrating compliance. If there is not already a required method in place, then a method must be proposed.) 1) Monitoring/Recordkeeping - Permit Condition: 6.2.3., 6.4.1. 2) Monitoring/Recordkeeping - Permit Condition: 6.2.3., 6.4.1. 3) Monitoring/Recordkeeping - Permit Condition: 6.2.1., 6.2.3. 4) Standard - Permit Condition: 6.1.5. 5) Reporting - Permit Condition: 6.1.6. 6) Recordkeeping - Permit Condition: 6.1.7.
Are you in compliance with all applicable requirements for this emission unit? _X_Yes ___No If no, complete the **Schedule of Compliance Form** as **ATTACHMENT F**.

ATTACHMENT F

SCHEDULE OF COMPLIANCE FORM (NOT APPLICABLE)

Title V Operating Permit Renewal Application

Buckhannon Facility, Facility ID No. 097-00029
Buckhannon, West Virginia

Weyerhaeuser NR Company
41 TJM Drive
Buckhannon, West Virginia

March 2021

ATTACHMENT G

AIR POLLUTION CONTROL DEVICE FORM(S)

Title V Operating Permit Renewal Application

Buckhannon Facility, Facility ID No. 097-00029
Buckhannon, West Virginia

Weyerhaeuser NR Company
41 TJM Drive
Buckhannon, West Virginia

March 2021

ATTACHMENT G - Air Pollution Control Device Form

Control device ID number: 3C	**List all emission units associated with this control device.** Parallam Sealer Spray Booth	
Manufacturer: Custom Design	**Model number:** NA	**Installation date:** 2016

Type of Air Pollution Control Device:

___ Baghouse/Fabric Filter ___ Venturi Scrubber ___ Multiclone

___ Carbon Bed Adsorber ___ Packed Tower Scrubber ___ Single Cyclone

___ Carbon Drum(s) ___ Other Wet Scrubber ___ Cyclone Bank

___ Catalytic Incinerator ___ Condenser ___ Settling Chamber

___ Thermal Incinerator ___ Flare __ a Other (describe) _Pleated Cartridge Filter __

___ Wet Plate Electrostatic Precipitator ___ Dry Plate Electrostatic Precipitator

List the pollutants for which this device is intended to control and the capture and control efficiencies.

Pollutant	Capture Efficiency	Control Efficiency
PM10	100%	90%
MDI – HAP	100%	90%

Explain the characteristic design parameters of this control device (flow rates, pressure drops, number of bags, size, temperatures, etc.).

The sealer spray booth will be equipped with a ventilation enclosure hood to keep the system under negative pressure at all times. MDI ambient monitors will be located around the spray booth to detect the presents of any sealer that should not be collected by the control system. A 6,000 scfm reverse pitch fan will pull the exhaust through a (MERV 8) cartridge filter to capture and remove the PM HAP from the exhaust stream. The pressure drop across the filter(s) will be monitored.

Is this device subject to the CAM requirements of 40 C.F.R. 64? ___ Yes _X__ No

If Yes, **Complete ATTACHMENT H**

If No, **Provide justification.** Miscellaneous coating operations were evaluated by the Plywood and Composite Wood Products MACT. Therefore the sealing operations controlled by this device are included as part of the affected source under the following CAAA 112 MACT standard: 40CFR63, Subpart DDDD.

Describe the parameters monitored and/or methods used to indicate performance of this control device.

MDI monitors around the spray booth will be used to shut down the spray operation if a positive detection of the chemical sealer is measured. The permittee will also monitor the pressure drop across the filter media to assure the control system is operating efficiently.

ATTACHMENT G - Air Pollution Control Device Form

Control device ID number: BGHS1	**List all emission units associated with this control device.** PlamLayup - Rotary stranders, short strands hogs, and billet cut-off saw	
Manufacturer: MAC Environmental	**Model number:** 144MCF572	**Installation date:** 05/01/1995

Type of Air Pollution Control Device:

_X_ Baghouse/Fabric Filter ___ Venturi Scrubber ___ Multiclone

___ Carbon Bed Adsorber ___ Packed Tower Scrubber ___ Single Cyclone

___ Carbon Drum(s) ___ Other Wet Scrubber ___ Cyclone Bank

___ Catalytic Incinerator ___ Condenser ___ Settling Chamber

___ Thermal Incinerator ___ Flare ___ Other (describe) _____

___ Wet Plate Electrostatic Precipitator ___ Dry Plate Electrostatic Precipitator

List the pollutants for which this device is intended to control and the capture and control efficiencies.

Pollutant	Capture Efficiency	Control Efficiency
Particulate Matter	100%	99%

Explain the characteristic design parameters of this control device (flow rates, pressure drops, number of bags, size, temperatures, etc.).
Design Flow Rate = 56,000 CFM
Number of Bags = 572

Is this device subject to the CAM requirements of 40 C.F.R. 64? ___ Yes **_X_ No**

If Yes, **Complete ATTACHMENT H**

If No**, Provide justification.**

Describe the parameters monitored and/or methods used to indicate performance of this control device.
Daily inspection to ensure proper operation (Differential pressure check)
Broken bag detectors.

ATTACHMENT G - Air Pollution Control Device Form

Control device ID number: BGHS2A	**List all emission units associated with this control device.** PlamReman1 - Billet reject saw, sizer, package saw and defect saw)	
Manufacturer: MAC Environmental	**Model number:** 144MCF494	**Installation date:** 05/01/1995

Type of Air Pollution Control Device:

_X_ Baghouse/Fabric Filter	___ Venturi Scrubber	___ Multiclone
___ Carbon Bed Adsorber	___ Packed Tower Scrubber	___ Single Cyclone
___ Carbon Drum(s)	___ Other Wet Scrubber	___ Cyclone Bank
___ Catalytic Incinerator	___ Condenser	___ Settling Chamber
___ Thermal Incinerator	___ Flare	___ Other (describe) _____
___ Wet Plate Electrostatic Precipitator		___ Dry Plate Electrostatic Precipitator

List the pollutants for which this device is intended to control and the capture and control efficiencies.

Pollutant	Capture Efficiency	Control Efficiency
Particulate Matter	100%	99%

Explain the characteristic design parameters of this control device (flow rates, pressure drops, number of bags, size, temperatures, etc.).
Design Flow Rate = 44,700 CFM
Number of Bags = 494

Is this device subject to the CAM requirements of 40 C.F.R. 64? ___ Yes **_X_ No**

If Yes, **Complete ATTACHMENT H**

If No**, Provide justification.**

Describe the parameters monitored and/or methods used to indicate performance of this control device.
Daily inspection to ensure proper operation (Differential pressure check)
Broken bag detectors.

ATTACHMENT G - Air Pollution Control Device Form

Control device ID number: BGHS2B	**List all emission units associated with this control device.** PlamReman2 - Twin band saw and planer	
Manufacturer: MAC Environmental	**Model number:** 144MCF494	**Installation date:** 05/01/1995

Type of Air Pollution Control Device:

_X_ Baghouse/Fabric Filter	___ Venturi Scrubber	___ Multiclone
___ Carbon Bed Adsorber	___ Packed Tower Scrubber	___ Single Cyclone
___ Carbon Drum(s)	___ Other Wet Scrubber	___ Cyclone Bank
___ Catalytic Incinerator	___ Condenser	___ Settling Chamber
___ Thermal Incinerator	___ Flare	___ Other (describe) _____
___ Wet Plate Electrostatic Precipitator		___ Dry Plate Electrostatic Precipitator

List the pollutants for which this device is intended to control and the capture and control efficiencies.

Pollutant	Capture Efficiency	Control Efficiency
Particulate Matter	100%	99%

Explain the characteristic design parameters of this control device (flow rates, pressure drops, number of bags, size, temperatures, etc.).
Design Flow Rate = 50,900 CFM
Number of Bags = 494

Is this device subject to the CAM requirements of 40 C.F.R. 64? ___ Yes **_X_ No**

If Yes, **Complete ATTACHMENT H**

If No**, Provide justification.**

Describe the parameters monitored and/or methods used to indicate performance of this control device.
Daily inspection to ensure proper operation (Differential pressure check)
Broken bag detectors.

ATTACHMENT G - Air Pollution Control Device Form

Control device ID number: BGHS3	**List all emission units associated with this control device.** MlamReman2 - Rip saw, bundle cut saws, and trim saws	
Manufacturer: MAC Environmental	**Model number:** 144MCF255	**Installation date:** 05/01/1995

Type of Air Pollution Control Device:

_X_ Baghouse/Fabric Filter	___ Venturi Scrubber	___ Multiclone
___ Carbon Bed Adsorber	___ Packed Tower Scrubber	___ Single Cyclone
___ Carbon Drum(s)	___ Other Wet Scrubber	___ Cyclone Bank
___ Catalytic Incinerator	___ Condenser	___ Settling Chamber
___ Thermal Incinerator	___ Flare	___ Other (describe) _____
___ Wet Plate Electrostatic Precipitator		___ Dry Plate Electrostatic Precipitator

List the pollutants for which this device is intended to control and the capture and control efficiencies.

Pollutant	Capture Efficiency	Control Efficiency
Particulate Matter	100%	99%

Explain the characteristic design parameters of this control device (flow rates, pressure drops, number of bags, size, temperatures, etc.).
Design Flow Rate = 26,700 CFM
Number of Bags = 255

Is this device subject to the CAM requirements of 40 C.F.R. 64? ___ Yes **_X_ No**

If Yes, **Complete ATTACHMENT H**

If No**, Provide justification.**

Describe the parameters monitored and/or methods used to indicate performance of this control device.
Daily inspection to ensure proper operation (Differential pressure check)
Broken bag detectors.

ATTACHMENT G - Air Pollution Control Device Form

Control device ID number: BGHS4	**List all emission units associated with this control device.** MlamReman1 - Side trim hogs, billet cut-off saws, and reman hogger	
Manufacturer: MAC Environmental	**Model number:** 144MCF416	**Installation date:** 05/01/1995

Type of Air Pollution Control Device:

_X_ Baghouse/Fabric Filter	___ Venturi Scrubber	___ Multiclone
___ Carbon Bed Adsorber	___ Packed Tower Scrubber	___ Single Cyclone
___ Carbon Drum(s)	___ Other Wet Scrubber	___ Cyclone Bank
___ Catalytic Incinerator	___ Condenser	___ Settling Chamber
___ Thermal Incinerator	___ Flare	___ Other (describe) _____
___ Wet Plate Electrostatic Precipitator		___ Dry Plate Electrostatic Precipitator

List the pollutants for which this device is intended to control and the capture and control efficiencies.

Pollutant	Capture Efficiency	Control Efficiency
Particulate Matter	100%	99%

Explain the characteristic design parameters of this control device (flow rates, pressure drops, number of bags, size, temperatures, etc.).
Design Flow Rate = 40,000 CFM
Number of Bags = 416

Is this device subject to the CAM requirements of 40 C.F.R. 64? ___ Yes **_X_ No**

If Yes, **Complete ATTACHMENT H**

If No**, Provide justification.**

Describe the parameters monitored and/or methods used to indicate performance of this control device.
Daily inspection to ensure proper operation (Differential pressure check)
Broken bag detectors.

ATTACHMENT G - Air Pollution Control Device Form

Control device ID number: BGHS5	**List all emission units associated with this control device.** DrySilo	
Manufacturer: MAC Environmental	**Model number:** 144MCF88	**Installation date:** 05/01/1995

Type of Air Pollution Control Device:

_X_ Baghouse/Fabric Filter	___ Venturi Scrubber	___ Multiclone
___ Carbon Bed Adsorber	___ Packed Tower Scrubber	___ Single Cyclone
___ Carbon Drum(s)	___ Other Wet Scrubber	___ Cyclone Bank
___ Catalytic Incinerator	___ Condenser	___ Settling Chamber
___ Thermal Incinerator	___ Flare	___ Other (describe) _____
___ Wet Plate Electrostatic Precipitator		___ Dry Plate Electrostatic Precipitator

List the pollutants for which this device is intended to control and the capture and control efficiencies.

Pollutant	Capture Efficiency	Control Efficiency
Particulate Matter	100%	99%

Explain the characteristic design parameters of this control device (flow rates, pressure drops, number of bags, size, temperatures, etc.).
Design Flow Rate = 4,400 CFM
Number of Bags = 88

Is this device subject to the CAM requirements of 40 C.F.R. 64? ___ Yes **_X_ No**

If Yes, **Complete ATTACHMENT H**

If No**, Provide justification.**

Describe the parameters monitored and/or methods used to indicate performance of this control device.
Daily inspection to ensure proper operation (Differential pressure check)
Broken bag detectors.

ATTACHMENT G - Air Pollution Control Device Form

Control device ID number: ESP	**List all emission units associated with this control device.** WoodFurn	
Manufacturer: PPC Industries	**Model number:** 20R-1230-2712	**Installation date:** 05/01/1995

Type of Air Pollution Control Device:

___ Baghouse/Fabric Filter ___ Venturi Scrubber ___ Multiclone

___ Carbon Bed Adsorber ___ Packed Tower Scrubber ___ Single Cyclone

___ Carbon Drum(s) ___ Other Wet Scrubber ___ Cyclone Bank

___ Catalytic Incinerator ___ Condenser ___ Settling Chamber

___ Thermal Incinerator ___ Flare ___ Other (describe) _____

___ Wet Plate Electrostatic Precipitator **_X_ Dry Plate Electrostatic Precipitator**

List the pollutants for which this device is intended to control and the capture and control efficiencies.

Pollutant	Capture Efficiency	Control Efficiency
Particulate Matter	100%	84%

Explain the characteristic design parameters of this control device (flow rates, pressure drops, number of bags, size, temperatures, etc.).
Gas flow rate: 110,000 ACFM
Operating temperature: 450 F
Operating pressure: 14.7 psia
Pressure drop: 0.5 W.C.
Gas velocity: 3.06 ft/sec
Treatment time: 6.7 sec

Is this device subject to the CAM requirements of 40 C.F.R. 64? ___ Yes **_X_ No**

If Yes, **Complete ATTACHMENT H**

If No**, Provide justification.**

Describe the parameters monitored and/or methods used to indicate performance of this control device.
Operating voltages on the ESP of 20 to 60 Killivolts.
Operating current on the ESP of 100 to 500 Milliamps.
Monitored parameters are recorded once every 24 hours.

ATTACHMENT G - Air Pollution Control Device Form

Control device ID number: MClone	**List all emission units associated with this control device.** WoodFurn	
Manufacturer: Multi-Tube Enterprises	**Model number:** DC-12 Size 50	**Installation date:** 05/01/1995

Type of Air Pollution Control Device:

___ Baghouse/Fabric Filter ___ Venturi Scrubber **_X_ Multiclone**

___ Carbon Bed Adsorber ___ Packed Tower Scrubber ___ Single Cyclone

___ Carbon Drum(s) ___ Other Wet Scrubber ___ Cyclone Bank

___ Catalytic Incinerator ___ Condenser ___ Settling Chamber

___ Thermal Incinerator ___ Flare ___ Other (describe) _____

___ Wet Plate Electrostatic Precipitator ___ Dry Plate Electrostatic Precipitator

List the pollutants for which this device is intended to control and the capture and control efficiencies.

Pollutant	Capture Efficiency	Control Efficiency
Particulate Matter	100%	70%

Explain the characteristic design parameters of this control device (flow rates, pressure drops, number of bags, size, temperatures, etc.).
Gas flow rate: 110,000 ACFM
Operating temperature: 650 F
Operating pressure: 14.7 psia
Inlet gas velocity: 2700 ft/sec

Is this device subject to the CAM requirements of 40 C.F.R. 64? ___ Yes **_X_ No**

If Yes, **Complete ATTACHMENT H**

If No**, Provide justification.**

Describe the parameters monitored and/or methods used to indicate performance of this control device.
Pressure drop of 2 to 6 inches W.C. (H_2O) across the Multiclone.

ATTACHMENT H

COMPLIANCE ASSURANCE MONITORING FORM (NOT APPLICABLE)

Title V Operating Permit Renewal Application

Buckhannon Facility, Facility ID No. 097-00029
Buckhannon, West Virginia

Weyerhaeuser NR Company
41 TJM Drive
Buckhannon, West Virginia

March 2021